Mitchell D. Roth
Mayor

Maurice C. Messina
Director

Michelle Malia Hiraishi
Deputy Director

County of Hawai`i

DEPARTMENT OF PARKS AND RECREATION
101 Pauahi Street, Suite 6 • Hilo, Hawai'i 96720
(808) 961-8311 • Fax (808) 961-8411
Email: parks_recreation@hawaiicounty.gov
http://www.hawaiicounty.gov/parks-and-recreation/

January 3, 2023

Director Scott Glenn
State of Hawai'i, Office of Planning and Sustainable Development
Environmental Review Program
235 S. Beretania Street, Room #702
Honolulu, Hawai'i 96813

Dear Director:

With this letter, the County of Hawai'i, Department of Parks and Recreation hereby transmits the Final Environmental Assessment and Finding of No Significant Impact (FEA-FONSI) for the Miloli'i Beach Park Accessibility Improvement Project situated at Tax Map Key (TMK) (3) 8-9-004:001 in the South Kona District, in the southwestern region of on the island of Hawai'i for publication in the next available edition of *The Environmental Notice*.

The following are included as part of the online submittal:

- A completed Agency Publication Form;
- A searchable Adobe Acrobat PDF file of the FEA-FONSI;
- A .zip file that contains the shapefile or KML file for the action location boundary.

If there are any questions, please contact Jeffrey S. Ochi, Park Projects Manager at the Department of Parks and Recreation at:

Office: 808-961-8916
Mobile: 808-430-8273
Email: Jeffrey.Ochi@hawaiicounty.gov

Sincerely,

Jeffrey S. Ochi
Park Projects Manager

From: webmaster@hawaii.gov
To: DBEDT OPSD Environmental Review Program
Subject: New online submission for The Environmental Notice
Date: Wednesday, January 4, 2023 3:32:50 PM

Action Name

Miloliʻi Beach Park Accessibility Improvement Project

Type of Document/Determination

Final environmental assessment and finding of no significant impact (FEA-FONSI)

HRS §343-5(a) Trigger(s)

- (1) Propose the use of state or county lands or the use of state or county funds
- (2) Propose any use within any land classified as a conservation district

Judicial district

South Hilo, Hawaiʻi

Tax Map Key(s) (TMK(s))

(3) 8-9-004:001

Action type

Agency

Other required permits and approvals

SMA, Shoreline Setback Variance, Building Permit

Proposing/determining agency

County of Hawaiʻi, Department of Parks and Recreation

Agency contact name

Jeff Ochi

Agency contact email (for info about the action)

Jeffrey.Ochi@hawaiicounty.gov

Email address or URL for receiving comments

kjohnson@bowengineering.com

Agency contact phone

(808) 961-8916

Agency address

101 Pauahi Street
Suite 6
Hilo, HI 96720
United States
Map It

Was this submittal prepared by a consultant?

Yes

Consultant

Bow Engineering & Development, Inc.

Consultant contact name

Korey Johnson

Consultant contact email

kjohnson@bowengineering.com

Consultant contact phone

(808) 369-8214

Consultant address

1953 S. BERETANIA ST.
PH-A
Honolulu, Hawaii 96826
United States
Map It

Action summary

The County of Hawai‘i Department of Parks and Recreation proposes to improve Miloli‘i Beach Park buildings and amenities to comply with current Americans with Disabilities Act (ADA) guidelines, which would improve recreational access for disabled visitors to the beach park. The project involves improvements to the comfort station and associated water supply, pavilion, parking lot, walkways, and basketball/volleyball courts.

The objectives of the project are:
• To protect the health and safety of the public.
• To bring the existing park facilites into compliance with ADA guidlines and
County permit requirements.
• To provide connecting walks and ramps to park facilities for greater accessibility from feature to feature.
• To maintain fishing access for local community.
• To maintain the character of the existing Miloli‘i Beach Park.
• To provide improved recreational facilities for the Miloli‘i community.
• To improve the longevity of existing beach park facilities.

Reasons supporting determination

Please refer to "Section 5. Finding and Determination" of the Final Environmental Assessment for reasons supporting determination.

Attached documents (signed agency letter & EA/EIS)

- Final-EA-Milolii.pdf
- Milolii_Signed-Agency-Letter.pdf

Shapefile

- The location map for this Final EA is the same as the location map for the associated Draft EA.

Action location map

- Milolii-Beach-Park-Location-Map.zip

Authorized individual

Korey Johnson

Authorization

- The above named authorized individual hereby certifies that he/she has the authority to make this submission.

Miloli‘i Beach Park Accessibility Improvement Project

Miloli‘i, South Kona, Island of Hawai‘i

Final Environmental Assessment

This environmental document has been prepared pursuant to
Hawaii Revised Statutes, Chapter 343
and Hawaii Administrative Rules, Title 11, Chapter 200.1

Prepared for:

County of Hawai‘i
Department of Parks and Recreation
101 Pauahi St., Suite 6
Hilo, Hawai‘i 96720

Prepared by:

Bow Engineering & Development, Inc.

Civil Engineering *Planning*

1953 South Beretania Street, PH-A
Honolulu, Hawai‘i 96826
Telephone: (808) 941-8853
Fax: (808) 945-9299
www.bowengineering.com

and

Environmental Planning Partners, Inc.

December 2022

This page intentionally
left blank.

PROJECT SUMMARY

Project Name:	Miloli‘i Beach Park Accessibility Improvement Project Miloli‘i, South Kona, Island of Hawai‘i
Type of Document:	Final Environmental Assessment
Proposing/Approving Agency:	County of Hawai‘i, Department of Parks and Recreation 101 Pauahi St., Suite 6 Hilo, Hawai‘i 96720 Contact: Jeff Ochi, Project Manager (808) 961-8411
Location:	Miloli‘i Beach Park 89-1151 Miloli‘i Road Captain Cook, HI 96704 TMK: (3) 8-9-004:001
Proposed Project:	The proposed project includes the improvement of existing Miloli‘i Beach Park buildings and amenities to comply with current Americans with Disabilities Act guidelines.
HRS Ch. 343 Trigger:	Use of state lands and state funds; use of conservation district lands
State Land Use Designation:	Conservation District
Existing Zoning:	Open District
Special Management Area:	Within County of Hawai‘i SMA
Permits Anticipated:	Special Management Area Use Permit Shoreline Setback Variance Building Permit
Determination:	Finding of No Significant Impact (FONSI)

SUMMARY OF MITIGATION MEASURES AND PROJECT COMMITMENTS TO MINIMIZE POTENTIAL IMPACTS OF THE PROJECT

The following measures have been incorporated into the project description:

Site-Specific Best Management Practices

Due to the proximity of nearshore ocean waters, the project could present increased potential for water quality impacts during construction. The proposed project would include site-specific Best Management Practices (BMP) to be implemented during project construction to minimize erosion and potential impacts to water quality. The BMPs would include but would not be limited to the USFWS recommended standard BMPs regarding sedimentation and erosion in aquatic environments:

1. Turbidity and siltation from project-related work should be minimized and contained within the project area by silt containment devices and curtailing work during flooding or adverse tidal and weather conditions. BMPs should be maintained for the life of the construction period until turbidity and siltation within the project area is stabilized. All project construction-related debris and sediment containment devices should be removed and disposed of at an approved site.
2. All project construction-related materials and equipment (dredges, vessels, backhoes, silt curtains, etc.) to be placed in an aquatic environment should be inspected for pollutants including, but not limited to; marine fouling organisms, grease, oil, etc., and cleaned to remove pollutants prior to use. Project related activities should not result in any debris disposal, non-native species introductions, or attraction of non-native pests to the affected or adjacent aquatic or terrestrial habitats. Implementing both a litter-control plan and a Hazard Analysis and Critical Control Point plan (HACCP - see http://www.haccp- nrm.org/Wizard/default.asp) can help to prevent attraction and introduction of non-native species.
3. Project construction-related materials (fill, revetment rock, pipe, etc.) should not be stockpiled in, or in close proximity to aquatic habitats and should be protected from erosion (e.g., with filter fabric, etc.), to prevent materials from being carried into waters by wind, rain, or high surf.
4. Fueling of project-related vehicles and equipment should take place away from the aquatic environment and a contingency plan to control petroleum products accidentally spilled during the project should be developed. The plan should be retained on site with the person responsible for compliance with the plan. Absorbent pads and containment booms should be stored on-site to facilitate the clean-up of accidental petroleum releases.
5. All deliberately exposed soil or under-layer materials used in the project near water should be protected from erosion and stabilized as soon as possible with geotextile, filter fabric or native or non-invasive vegetation matting, hydro-seeding, etc.

These BMPs will be refined in accordance with County of Hawai‘i regulatory requirements as part of the permitting process.

MITIGATION MEASURES AND REGULATORY REQUIREMENTS
Geology, Topography, and Soils
All earthwork and grading operations would be conducted in compliance with dust and erosion control requirements of Hawaii County Code Chapter 10, *Erosion and Sedimentation Control*. The proposed action includes a site-specific BMP plan developed as part of the project to minimize erosion and sedimentation during construction. The BMPs would include site-specific measures as outlined in Section 2.2 of this EA.
Hydrology and Water Quality
The proposed action includes site-specific BMPs to be implemented during construction in order to prevent any stormwater, sediment, soil, and debris resulting from the proposed construction from adversely impacting the coastal ecosystem or adjacent properties. Further, all earthwork grading operations would be conducted in compliance with dust and erosion control requirements of Hawai'i County Code Chapter 10, *Erosion and Sedimentation Control*.
Biological Resources
During construction, site-specific BMPs developed as part of the permitting process would minimize erosion and sedimentation and potential adverse effects to aquatic biota in the vicinity of the project site.
To avoid and minimize impacts to the endangered Hawaiian hoary bat, the USFWS provides the following recommendations: • Do not disturb, remove, or trim woody plants greater than 15 feet tall during the bat birthing and pup rearing season (June 1 through September 15). • Do not use barbed wire for fencing.
To avoid and minimize potential project impacts to Hawaiian geese, the USFWS provides the following recommendations: • Do not approach, feed, or disturb Hawaiian geese. • If Hawaiian geese are observed loafing or foraging within the project area during the breeding season (September through April), have a biologist familiar with the nesting behavior of *nēnē* survey for nests in and around the project area prior to the resumption of any work. Repeat surveys after any subsequent delay of work of 3 or more days (during which the birds may attempt to nest). ◊ Cease all work immediately and contact the USFWS for further guidance if a nest is discovered within a radius of 150 feet of proposed work, or a previously undiscovered nest is found within said radius after work begins. • In areas where Hawaiian geese are known to be present, post and implement reduced speed limits, and inform project personnel and contractors about the presence of endangered species on-site.
To avoid and minimize potential project impacts to sea turtles and their nests, the USFWS provides the following applicable recommendations: • Implement site-specific BMPs regarding sedimentation and erosion in aquatic environments identified in the project description and as recommended by the USFWS. • Have a biologist familiar with sea turtles conduct a visual survey of the project site to ensure no basking sea turtles are present. ◊ If a basking sea turtle is found within the project area, cease all mechanical or construction activities within 100 feet until the animal voluntarily leaves the area. • Avoid nighttime work during the nesting and hatching season (May to December). • Minimize the use of lighting and shield all project-related lights so the light is not visible from any beach. ◊ If lights can't be fully shielded or if headlights must be used, fully enclose the light source with light filtering tape or filters.
To avoid and minimize potential project impacts to Hawaiian waterbirds, the USFWS provides the following recommendations, as applicable: • In areas where waterbirds are known to be present, post and implement reduced speed limits, and inform project personnel and contractors about the presence of endangered species on-site. • Implement site-specific BMPs regarding sedimentation and erosion in aquatic environments identified in the project description and as recommended by the USFWS

• Have a biological monitor that is familiar with the species' biology conduct Hawaiian waterbird nest surveys where appropriate habitat occurs within the vicinity of the proposed project site prior to project initiation. Repeat surveys again within 3 days of project initiation and after any subsequent delay of work of 3 or more days (during which the birds may attempt to nest). If a nest or active brood is found: ◊ Contact the Service within 48 hours for further guidance. ◊ Establish and maintain a 100-foot buffer around all active nests and/or broods until the chicks/ducklings have fledged. Do not conduct potentially disruptive activities or habitat alteration within this buffer. ◊ Have a biological monitor that is familiar with the species' biology present on the project site during all construction or earth moving activities until the chicks/ducklings fledge to ensure that Hawaiian waterbirds and nests are not adversely impacted.
Project design would reduce nighttime glare effects with low level footpath lighting and timered lights. All lighting would be properly shaded to eliminate light trespass. Therefore, adverse effects to seabirds due to nighttime lighting would be minimized with project features.
To avoid and minimize project impacts to yellow-faced bees and their nests, the USFWS provides the following recommendations, as applicable: • If an action will occur in or adjacent to known occupied habitat, a buffer area around the habitat may be required and can be worked out on a site-specific basis through consultation with the Service. • For coastal species, protect all coastal strand habitat from human disturbance, including: ◊ No fires or wood collecting ◊ Leave woody debris in place ◊ Restrict vehicles to existing roads and trails ◊ Post educational signs to inform people of the presence of sensitive species.
The USFWS recommended, site-specific BMPs regarding sedimentation and erosion in aquatic environments identified in the project description would minimize the degradation of water quality and impacts to fish and wildlife resources. The USFWS provides the following additional recommendations, as applicable: • Protect anchialine pools (both in and around) from the following human disturbance: ◊ Restrict vehicles to existing roads and trails ◊ Prevent trash, and other waste from entering into anchialine pools ◊ Avoid or limit to the maximum extent practicable entrance into the anchialine pools • Install educational signs near anchialine pools to inform people of the presence of sensitive species and habitats.
Historical, Archaeological, and Cultural Resources
While there is low probability of encountering archaeological sites in this area, in the event that historic resources, including human skeletal remains, are identified during the construction activities, all work would cease in the immediate vicinity of the find, the find would be protected from additional disturbance, and the State Historic Preservation Division would be notified pursuant to Section 13-280-3, HAR. In the event that *iwi kūpuna* and/or cultural finds are encountered during construction, cultural and lineal descendants of the area should be consulted to develop a reinterment plan and cultural preservation plan for proper cultural protocol, curation, and long-term maintenance.
The County aims to provide ongoing beach park access during construction of the proposed improvements. If access to the boat turn-around is limited any time during construction, the village community would be notified in advance.
Air Quality and Climate
All construction work will be in conformance with the air pollution control standards contained in HAR Title 11 Chapter 59 "Ambient Air Quality Standards," and Chapter 60 "Air Pollution Control," which would minimize air quality emissions.
Noise
Construction will be confined to 7 a.m. to 6 p.m., Monday through Friday, and 9 a.m. to 6 p.m. on Saturday. No construction activities exceeding maximum allowable noise levels will occur on Sundays and holidays without prior notice. Construction activities will comply with HAR Chapter 11-46, "Community Noise Control."

Implementation of these measures and compliance with regulatory requirements would minimize environmental impacts resulting from the proposed project. Permits and approvals required for implementation of the proposed project are listed in Section 2.3 of this EA.

TABLE OF CONTENTS

1 INTRODUCTION 1

1.1 Project Overview and Project Need 1

1.2 Purpose of the Environmental Assessment 1

1.3 Federal and State Authority 2

1.4 Steps in the Environmental Review Process 2

2 PROJECT DESCRIPTION 4

2.1 Environmental Setting 4

2.2 Description of the Proposed Action 9

2.3 Permits and Approvals Required or Potentially Required 11

3 DESCRIPTION OF THE AFFECTED ENVIRONMENT, ANTICIPATED EFFECTS, AND PROPOSED MITIGATION MEASURES 12

3.1 Geology, Topography, and Soils 12

3.2 Hydrology and Water Quality 13

3.3 Natural Hazards 17

3.4 Biological Resources 22

3.5 Historic, Archaeological, and Cultural Resources 25

3.6 Air Quality and Climate 29

3.7 Noise 30

3.8 Visual Resources 30

3.9 Social and Economic Characteristics 31

3.10 Utilities and Public Services 32

3.11 Traffic and Parking 32

3.12 Conformance with State and Local Plans, Policies, and Land Use Controls 33

4 ALTERNATIVES TO THE PROPOSED ACTION 47

4.1 Proposed Alternatives 47

5 FINDINGS AND DETERMINATION 49

6 INDIVIDUALS, COMMUNITY GROUPS, AND AGENCIES CONSULTED 53

6.1 Early Consultation 53

6.2 Miloli‘i Community Meetings 54

6.3 Comments and Responses on the Draft Environmental Assessment 55

6.4 Environmental Assessment Preparation 56

7 REFERENCES 57

FIGURES

Figure 1 Vicinity and Location Map....5
Figure 2 Project Area Tax Map Key....6
Figure 3 Conceptual Site Plan....7
Figure 4 National Wetlands Inventory Map....15
Figure 5 Flood Hazard Map....21
Figure 6 State Land Use District Map....35
Figure 7 Special Management Area Map....39
Figure 8 Shoreline Setback Area....40
Figure 9 Alternative 2 Conceptual Site Plan....48

APPENDICES

Appendix A Consultation and Comment Letters
Early Consultation Comment Letters
Draft EA Comment Letters
Table: Summary Comments and Responses
Appendix B Archaeological Survey
Appendix C Shoreline Certification Maps
Appendix D IWS Assessment and Feasibility Study for Miloli‘i Beach Park

1 INTRODUCTION

This Final Environmental Assessment (EA) has been processed as a Finding of No Significant Impact (FONSI) by the County of Hawai'i Department of Parks and Recreation. As a result, the preparation of an Environmental Impact Statement is not required.

Various places in the EA have been modified to reflect input received in the comments made on the Draft EA or during the public scoping meetings. To facilitate the readers' ability to distinguish revisions made to the Draft EA, additional or modified non-procedural text is shaded, as in this paragraph.

1.1 PROJECT OVERVIEW AND PROJECT NEED

The County of Hawai'i Department of Parks and Recreation proposes to improve Miloli'i Beach Park buildings and amenities to comply with current Americans with Disabilities Act (ADA) guidelines, which would improve recreational access for disabled visitors to the beach park. The project involves improvements to the comfort station and associated water supply, pavilion, parking lot, walkways, and basketball/volleyball courts.

The existing Miloli'i Beach Park parking lot, walkways, and basketball/volleyball courts are in a current state of disrepair, with cracks and eroded areas. These conditions have impacted park access and safety. Both the restroom and hālau/pavilion structures must be replaced in their entirety due to their age and extensive need for repair and modifications, and because the pavilion is located in the flood zone. Further, the existing pavilion is currently unpermitted, and would be brought up to County standards with implementation of the proposed improvements.

The County Department of Parks and Recreation has identified the following objectives of the Miloli'i Beach Park Accessibility Improvement Project (Miloli'i Beach Park Project):

- To protect the health and safety of the public.
- To bring the existing park facilities into compliance with ADA guidelines and County permit requirements.
- To provide connecting walks and ramps to park facilities for greater accessibility from feature to feature.
- To maintain fishing access for local community.
- To maintain the character of the existing Miloli'i Beach Park.
- To provide improved recreational facilities for the Miloli'i community.
- To improve the longevity of existing beach park facilities.

The Department of Parks and Recreation intends to retain the park amenities and features that currently exist while minimizing the amount of change to the park as much as possible. The proposed accessibility improvements are necessary to comply with the federal court order to complete ADA improvements, and not to increase visitation from outside the community.

1.2 PURPOSE OF THE ENVIRONMENTAL ASSESSMENT

The evaluation of projects to determine their effects on the environment is required by the Hawai'i Revised Statutes (HRS), Chapter 343. An Environmental Assessment (EA) is a "written evaluation to determine whether an action may have a significant effect" (HRS, Section 343-2). The agency

with primary responsibility over the project (the proposing agency) is required to prepare an EA and make a final environmental determination according to the presence of significant impacts or the lack thereof. As stated in HRS, Section 343-1:

> An environmental review process will integrate the review of environmental concerns with existing planning processes of the State and counties, and alert decision makers to significant environmental effects which may result from the implementation of certain actions. …The process of reviewing environmental effects is desirable because environmental consciousness is enhanced, cooperation and coordination are encouraged, and public participation during the review process benefits all parties involved and society as a whole.

As described above, the basic purpose of an EA is to provide information to the public and decision makers on proposed actions. The EA must also disclose: potential significant adverse environmental impacts, the expected primary and secondary consequences, and the cumulative as well as the short- and long-term effects of the action.

1.3 FEDERAL AND STATE AUTHORITY

The proposed action would use state funding and would be subject to state environmental laws and regulations. Environmental review procedures required by the State of Hawai‘i include compliance with HRS, Chapter 343 "Environmental Impact Statements", and Hawaii Administrative Rules (HAR), Title 11, Chapter 200.1, Department of Health, "Environmental Impact Statement Rules".

The project site is located within the State's land use district of "Conservation District," which is under the jurisdiction of the State Board of Land and Natural Resources (BLNR). Permitted uses, including recreational uses, are defined under HAR Title 13, Chapter 5, and require compliance with the State's environmental review process.

The project area is also located within the County's Special Management Area (SMA), as regulated under HRS, Chapter 2015A, Part II. Compliance with the State's environmental review process is required.

No federal funding is anticipated for Miloli‘i Beach Park Accessibility Improvement project, and would not be subject to the environmental review requirements prescribed under the National Environmental Policy Act (NEPA).

1.4 STEPS IN THE ENVIRONMENTAL REVIEW PROCESS

Early Consultation and Data Gathering

HAR, Section 11-200.1-18 requires that an agency must consult with agencies and individuals that might have jurisdiction or expertise with respect to the proposed action. Early consultation is considered an important part of the environmental review process – the ultimate goal is the gathering of information, data, and public concerns. A preliminary description of the project was circulated to agencies and individuals in July 2019, and phone consultations were conducted with permitting agencies as necessary. For a detailed description of the early consultation component of this project, see Chapter 6, *Individuals, Community Groups, and Agencies Consulted,* of this EA. Copies of the written comments are included in Appendix A.

Community Involvement

Several public meetings were held at the park to provide opportunity for community feedback and input, including meetings on October 18, 2019, November 3, 2019, and May 16, 2021. Community concerns identified at the meetings are summarized in Section 6.2 of this EA.

Based on community input, some design changes were made to the comfort station as set forth in Section 2.2 of this EA. All comments and responses to these comments are summarized in Section 6.3 of this EA. No changes to the analysis contained in Chapter 3 of this EA would result from the design modifications.

Circulation of the Draft Environmental Assessment

Following completion of the Draft EA, the environmental document was submitted to the State Office of Environmental Quality Control (OEQC)[1]. Notification of the availability of the Draft EA was published in the August 8, 2020 bimonthly bulletin called *The Environmental Notice*, in addition to the Hawaii Tribune Herald and made available at the public library. Due to concerns regarding adequate opportunities for public participation during COVID-19, the comment period for the project was extended, and notice of availability of the Draft EA was published in the subsequent issues of *The Environmental Notice*, including the September 8, 2020 issue, and the October 8, 2020 issue. During the 90-day public comment period ending November 9, 2020, agencies, organizations, and individuals were provided the opportunity to comment on the proposed project. For the proposed project, Department of Parks and Recreation submitted a notice of determination with the Draft EA to the OEQC with an Anticipated Finding of No Significant Impact (AFONSI) (HAR, Section 11-200.1-11). Section 6.3 of this EA contains a summary of comments on the Draft EA. Copies of all written comments received on the Draft EA are contained in Appendix A of this document.

Final Environmental Assessment and Finding of No Significant Impact

After the review period for the Draft EA, the Department of Parks and Recreation considered all comments and incorporated necessary changes into a Final EA. The purposes of the Final EA are to document agency and public consultation on the project and respond to the comments received during the comment period on the Draft EA. The Final EA also considers new issues and changes to the project since publication of the Draft EA, establishes that there are no significant impacts, and that a FONSI is appropriate so that the project can proceed. The publication of the notice of availability of the Final EA-FONSI in *The Environmental Notice* initiates a 30-day judicial challenge period under HRS, Section 343-7(b).

If the proposing agency reviews public comments on the Draft EA, and the public comments indicate that the proposed action could in fact have significant effects, the agency would prepare a Final EA supporting an Environmental Impact Statement Preparation Notice (EISPN) determination.

[1] On July 1, 2021, the OEQC was transferred and renamed to the Environmental Review Program, within the Office of Planning and Sustainable Development.

2 PROJECT DESCRIPTION

2.1 ENVIRONMENTAL SETTING

Project Location

Miloli‘i Beach Park is located at the coastal village of Miloli‘i in the South Kona District in the southwestern region of Hawai‘i Island (see Figure 1). Miloli‘i is considered one of the most traditional fishing villages in Hawai‘i. The existing park site includes approximately 1.41 acres identified as Tax Map Key (TMK): (3) 8-9-004:001 (see Figure 2).

Exhibit 2.1 – View of the existing pavilion and edge of parking area from the basketball court.

Existing Site Conditions

Existing facilities at the Miloli‘i Beach Park include a pavilion, restrooms serviced by an existing Individual Wastewater System (IWS) comprised of a septic tank and leach field, a basketball court, paved parking, a non-potable water system including a water tank, shed, picnic area, and designated camping area (see Figure 3 for existing and proposed facilities). According to the Department of Parks and Recreation, the existing Miloli‘i Beach Park pavilion was built (unpermitted) before 2006. The park pavilion, sometimes referred to as the Miloli‘i Hālau, is an open-air building, approximately 80 feet by 40 feet, with multiple picnic benches under the covered building. There is existing lighting in the pavilion.

On a daily basis the park is used for sightseeing, picnicking, sports, community gatherings, community library and education center, swimming and snorkeling, fishing, and camping. A charter school uses the pavilion frequently and has an ongoing research project at the park in the marine waters. The coastal portion of the park includes a rocky beach and a large tidal pool. The area near the beachfront is used as a campsite, and campers typically park their vehicle on the dirt beyond the parking area closer toward the beach. Based on camping permits for the site, a maximum of 22 campers per night are permitted.

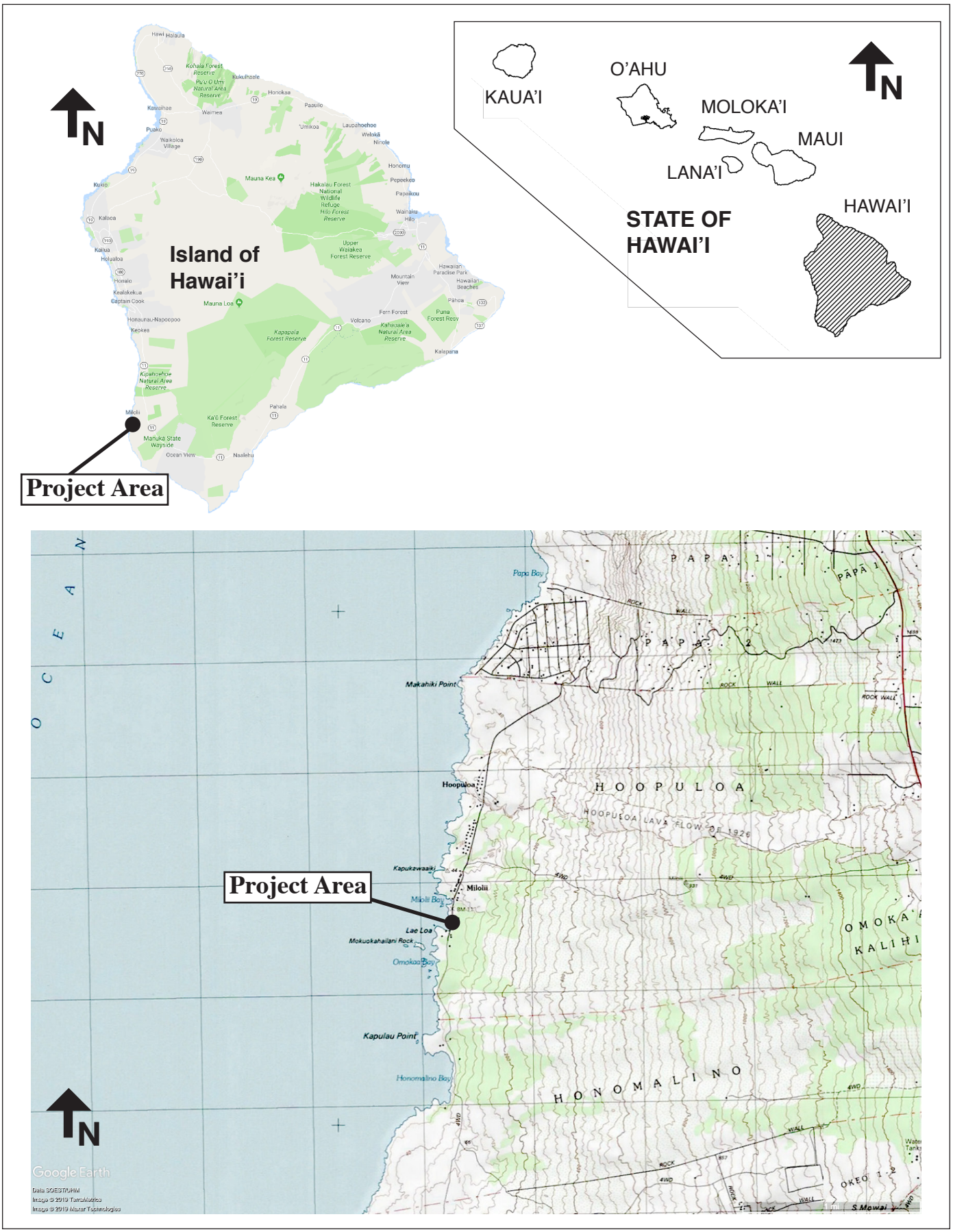

SOURCE: Planning Partners, 2019; Google Maps, Google Earth, 2019

Miloli'i Beach Park Accessibility Improvement

Figure 1

Vicinity and Location Map

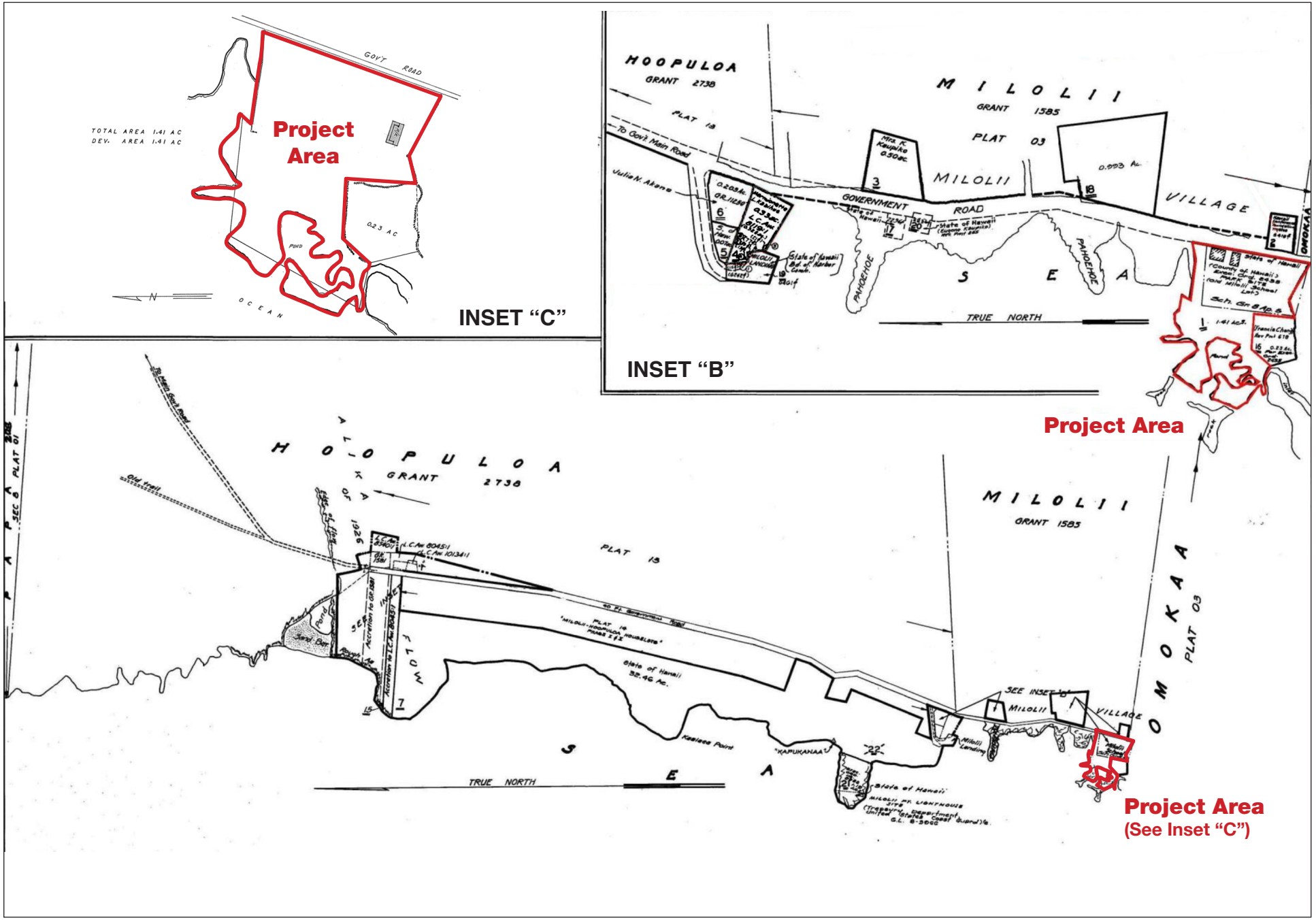

SOURCE: Planning Partners, 2019; Huan & Associates, 2019

Miloli'i Beach Park Accessibility Improvement

Figure 2

Project Area Tax Map Key

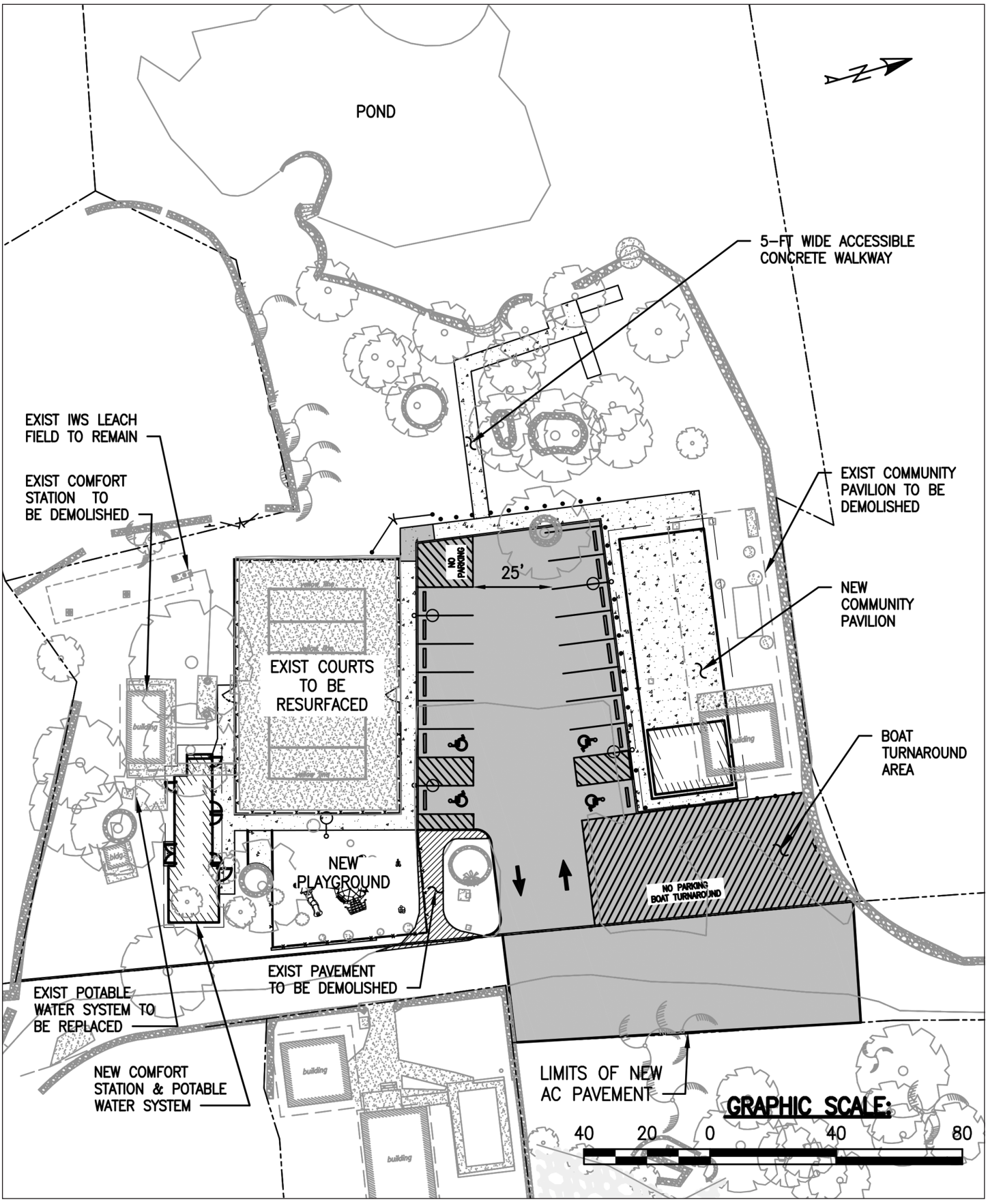

Miloli'i Beach Park Accessibility Improvement

SOURCE: Bow Engineering & Development, Inc. 2022

Figure 3
Conceptual Site Plan

Exhibit 2.2 – View of the campground area.

Exhibit 2.3 – View of the basketball court and comfort station in the background.

Surrounding land uses include Hau‘oli Kamana‘o Congregational Church to the east, a residence to the south, and the Pacific Ocean to the west and north.

2.2 DESCRIPTION OF THE PROPOSED ACTION

The Department of Parks and Recreation proposes to improve Miloli‘i Beach Park buildings and amenities to comply with current Americans with Disabilities Act (ADA) guidelines. The proposed project includes:

- replacement of the existing pavilion (with storage and electrical room) with proper permits to meet current ADA standards;
- replacement of the comfort station to meet current ADA standards;
- replacement of the non-potable water storage and booster pump station for the new comfort station;
- improvement of the parking lot to be ADA accessible;
- improvement of the walkways connecting the comfort station with the parking area and park facilities to be ADA accessible;
- reconstruction and resurfacing of the basketball/volleyball courts enclosed within a surrounding chain link fence;
- construction of a new playground and a surrounding chain link fence;
- designation of a boat turnaround area; and,
- installation of vehicular barriers to prevent unauthorized vehicles from accessing the shoreline and the pavilion.

The proposed action includes demolishing both the existing pavilion and comfort station (see Figure 3 for the conceptual site plan). The pavilion use would remain under community control. Parking would include 16 total stalls, including 12 standard stalls and 4 ADA accessible stalls (including 1 van accessible stall). A boat turnaround area adjacent to the pavilion would be paved with “No Parking” signage.

The existing solar panels (PV system) on the pavilion would be removed and salvaged and replaced with a new PV/battery power system (see Modifications to the Site Plan, below). The proposed project includes lighting for the restrooms and area lighting along the accessible paths. Security lighting for the pavilion would run off of the PV system. Solar tubes for natural lighting may be considered in the comfort station.

A maximum of 22 campers per night are currently allowed with permits. With implementation of the improvements, camping rules and reservations would remain the same as those existing.

Two trees would be removed with construction of the proposed improvements. Excavated materials from construction would be separated and reused on the project site, as possible. Following completion of the proposed improvements, all unpaved areas to be graded would be grassed or hydroseeded. Any remaining construction waste would be removed from the project site. New signage would include accessible parking signs in the parking area and accessible signs for the restrooms.

The County aims to provide ongoing beach parking and access during construction of the proposed improvements. Temporary parking during construction would likely be onsite or along Miloli‘i Road.

Modifications to the Site Plan
Since issuance of the Draft EA in July 2020, some design changes have been made based on community feedback during the scoping meetings. Changes to the design include the following:

- Comfort Station: the comfort station layout has been updated to allow for single occupancy restrooms, janitor room, and secured potable water tank and pump system.
- A new battery powered system (via PV panels on pavilion roof) to provide electrical power for site lighting (accessible paths, parking lot, playground, comfort station, pavilion), power to water tank and pump system and portable generator use at pavilion (to be provided and used by community).
- Three (3) wall mounted junction boxes for future installation and use of security camera system. Cameras would also be used to check on surf conditions (by civil defense).
- Drywells would be installed in the parking lot to connect and capture roof runoff from pavilion downspouts (drywells are still being sited and are not shown on site plans).

Site-Specific Best Management Practices
Due to the proximity of nearshore ocean waters, the project could present increased potential for water quality impacts during construction. The proposed project would include site-specific Best Management Practices (BMP) to be implemented during project construction to minimize erosion and potential impacts to water quality. The BMPs would include but would not be limited to the USFWS recommended standard BMPs[2] regarding sedimentation and erosion in aquatic environments:

1. Turbidity and siltation from project-related work should be minimized and contained within the project area by silt containment devices and curtailing work during flooding or adverse tidal and weather conditions. BMPs should be maintained for the life of the construction period until turbidity and siltation within the project area is stabilized. All project construction-related debris and sediment containment devices should be removed and disposed of at an approved site.
2. All project construction-related materials and equipment (dredges, vessels, backhoes, silt curtains, etc.) to be placed in an aquatic environment should be inspected for pollutants including, but not limited to; marine fouling organisms, grease, oil, etc., and cleaned to remove pollutants prior to use. Project related activities should not result in any debris disposal, non-native species introductions, or attraction of non-native pests to the affected or adjacent aquatic or terrestrial habitats. Implementing both a litter-control plan and a Hazard Analysis and Critical Control Point plan (HACCP - see http://www.haccp- nrm.org/Wizard/default.asp) can help to prevent attraction and introduction of non-native species.
3. Project construction-related materials (fill, revetment rock, pipe, etc.) should not be stockpiled in, or in close proximity to aquatic habitats and should be protected from erosion (e.g., with filter fabric, etc.), to prevent materials from being carried into waters by wind, rain, or high surf.

[2] Since no activities are proposed in the nearby marine environment, several BMPs from the USFWS standard recommendations were not included.

4. Fueling of project-related vehicles and equipment should take place away from the aquatic environment and a contingency plan to control petroleum products accidentally spilled during the project should be developed. The plan should be retained on site with the person responsible for compliance with the plan. Absorbent pads and containment booms should be stored on-site to facilitate the clean-up of accidental petroleum releases.
5. All deliberately exposed soil or under-layer materials used in the project near water should be protected from erosion and stabilized as soon as possible with geotextile, filter fabric or native or non- invasive vegetation matting, hydro-seeding, etc.

These BMPs will be refined in accordance with County of Hawai'i regulatory requirements as part of the permitting process.

Project Phasing and Construction Cost

The project would be constructed based on funding availability in one phase over approximately 6 to 8 months. The estimated construction costs for completion of the proposed beach park improvements is $1.75 million.

2.3 PERMITS AND APPROVALS REQUIRED OR POTENTIALLY REQUIRED

Government permits required or potentially required to implement the proposed action are listed below:

State and County

- Chapter 343, HRS, Preparation and approval of an Environmental Assessment – The County of Hawai'i, Department of Parks and Recreation is the proposing agency for the proposed action and has the authority to determine if the EA is adequate and whether a FONSI is appropriate
- Conservation District Use Application (CDUA) – Site Plan approval is required by DLNR, Office of Conservation and Coastal Lands (OCCL)
- National Pollutant Discharge Elimination System (NPDES) General Permit for Construction Stormwater Activities (**not required**) - since construction activities would disturb approximately 0.44 acres (less than one acre of total land area), an NPDES permit would not be required
- Special Management Area Permit (SMA) – County of Hawai'i, Department of Planning and Permitting
- Shoreline Setback Variance – A portion of the concrete walkway to the campground and additional paving would be located within the Shoreline Setback Area, which may require a Shoreline Setback Variance from the County of Hawai'i, Department of Planning and Permitting
- Noise Permit – State of Hawai'i, Department of Health
- Construction Permits – Grading and Grubbing permits from the Department of Public Works

3 DESCRIPTION OF THE AFFECTED ENVIRONMENT, ANTICIPATED EFFECTS, AND PROPOSED MITIGATION MEASURES

The intent of this chapter is to describe the existing physical and social environment that is affected by the proposed action. As defined in HAR, Section 11-200.1, Environmental Impact Statement Rules, potential project impacts or effects may include primary and secondary impacts, in addition to cumulative impacts:

- A "primary impact" or "direct impact" means impacts or effects that are caused by the action and occur at the same time and place.
- A "secondary impact" or "indirect impact" means an impact or effect that is caused by the action and occurs later in time, but is still reasonably foreseeable. An indirect effect may include a growth-inducing effect and other effects related to induced changes in the pattern of land use, population density, or growth rate, and related effects on air, water, and other natural systems, including ecosystems.
- A "cumulative impact" means the impact on the environment that results from the incremental impact of the action when added to other past, present, and reasonably foreseeable future actions. Cumulative impacts can result from individually minor but collectively significant actions taking place over a period of time (HAR, Section 11-200.1-2).

Potential impacts that may result from implementation of the proposed action and mitigation measures to minimize the adverse impacts are described below.

3.1 GEOLOGY, TOPOGRAPHY, AND SOILS

Miloliʻi is located on the flat coastal plain off of the southwest slope of Mauna Loa, a volcano rising 13,679 feet above the Pacific Ocean. Mauna Loa is among the world's most active volcanoes, having erupted 33 times since its first well-documented historical eruption in 1843. Eight of these flows have reached down the slopes of Mauna Loa into North and South Kona, and four have reached the ocean. A 1926 eruption inundated a village named Hoʻopūloa, just north of Miloliʻi (USGS 2017).

The Natural Resources Conservation Service (NRCS) classifies the soils in Miloliʻi as Punaluu-Lava flows complex, 2 to 10 percent slopes (Map Symbol 121) (NRCS 2018). The land characteristics include organic material over Pahoehoe lava flows, which is common in this area. These soils are well drained (NRCS 2018).

The project area is relatively flat, with slopes ranging from 0 to 1.5 percent generally sloped toward the southern portion of the project site. Elevations on the project site range from 6.7-7.7 feet Mean Sea Level (MSL).

Based on soil suitability and extent, the State of Hawaiʻi, Department of Agriculture has established the Agricultural Lands of Importance to the State of Hawaiʻi (ALISH) system to identify areas of prime farmland. The ALISH system classifies three types of land suitable for agriculture: Prime Lands, Unique Lands, and Other Lands. The project site is not located on designated agricultural lands of importance (Hawaiʻi OP 1977).

IMPACTS AND MITIGATION MEASURES

Implementation of the proposed action would result in disturbance of less than 1 acre (approximately 0.44 acres). The proposed earthwork at the site would consist of minor grading. All vegetation within the grading limits would be removed during construction and re-grassed or hydroseeded following project completion.

Because the project site is relatively flat and has been previously graded and leveled, implementation of the project is not expected to involve substantial additional grading or earth-moving activities. There would be a short-term increase in dust during demolition and soil erosion during construction since grading associated with construction of the proposed facilities would result in the exposure of bare soil to potential erosion. All earthwork and grading operations would be conducted in compliance with dust and erosion control requirements of Hawaii County Code Chapter 10, *Erosion and Sedimentation Control*. The proposed action includes a site-specific Best Management Practices (BMP) plan developed as part of the project to minimize erosion and sedimentation during construction. The BMPs would include site-specific measures as outlined in Section 2.2 of this EA. With implementation of these BMPs, the proposed project would not result in a significant impact due to soil erosion or off-site sediment transport. For a discussion of drainage on the project site, see Section 3.2, *Hydrology and Water Quality*.

While the proposed accessibility improvements could slightly increase the amount of impermeable surfaces, all stormwater would continue to percolate into onsite soils. The construction of the accessibility improvements and replacement of existing park facilities would not alter the existing drainage pattern of the site in a manner that would result in substantial erosion or siltation, or flooding on- or off-site. For a discussion of stormwater erosion and sedimentation, see Section 3.2, *Hydrology and Water Quality*.

No long-term or cumulative adverse effects to topography or soils are anticipated with implementation of the proposed action.

3.2 HYDROLOGY AND WATER QUALITY

Coastal Features

The village of Miloliʻi is located on the relatively flat Kapalilua coastal plain. There are three bays in the project area, including Hoʻopūloa Bay, Miloliʻi Bay, and Omokaʻa Bay, with little protection from ocean waves and surge. Shoreline features in the community include a black sand beach at Hoʻopūloa Bay; the broad, gently sloping lava flows extending into the sea between Hoʻopūloa Bay and Miloliʻi Bay; and the shallow and exposed lava platform reefs extending from Miloliʻi Bay to Omokaʻa Bay. (Paʻa Pono Miloliʻi 2017)

Surface Waters

There are no surface waters or streams in the project area. The majority of perennial streams on the island of Hawaiʻi occur in the windward areas of higher rainfall.

Groundwater

As described in Section 3.1, *Geology, Topography, and Soils*, the surface geology of the project area is characterized by historic lava flows with little soil coverage that is very well drained (NRCS 2018). On Hawai'i Island, groundwater recharge occurs when rainfall percolates through the root zone to the basal aquifer (State of Hawaii 2019). Because of the high permeability of the project area soils, precipitation on the project site generally percolates to the underlying groundwater, and direct runoff to the ocean rarely occurs (Farber & Associates 2012). During site investigations by Bow Engineering, Inc., brackish springs were observed in nearshore areas.

The project area is within Southwest Mauna Loa Aquifer Sector Area, within the Manukā ground water hydrologic unit (State of Hawaii 2019). The 2019 predicted sustainable yield for the Manukā groundwater unit is approximately 25 million gallons per day (State of Hawaii 2019).

Wetlands

A review of the USFWS National Wetland Inventory Map was completed to identify the presence of wetlands within the vicinity of the project. While there is Estuarine and Marine Deepwater and Wetland identified for the coastal shore, no potentially jurisdictional wetlands or wetlands of the United States were identified on the project site (see Figure 4) (USFWS 2019).

State Water Quality Standards

Coastal waters in the vicinity of Miloli'i Bay are classified by the State Department of Health (DOH) as "AA" (DOH 2014). The objective of Class AA waters is that their waters remain in their natural pristine state as nearly as possible. According to HAR Section 11-54-3(c)(1), Class AA waters shall encounter "an absolute minimum of pollution or alteration of water quality from any human-caused source or actions."

Water Quality and Marine Environment

The Clean Water Act (CWA), Section 303(d), requires states to submit a list of waters that do not attain or maintain applicable water quality numeric criteria, in addition to a priority ranking of impaired waters for Total Maximum Daily Loads (TMDL) development based on the severity of pollution and the uses of the waters. After the identification of water quality-limited waters is completed, states develop TMDLs at a level necessary to achieve the applicable state water quality standards. The State's water quality report lists the Miloli'i Beach marine waters for turbidity during the dry season, and is categorized as a "low" priority for initiating TMDL development for the next cycle of monitoring and assessment (DOH CWB 2018).

SOURCE: U.S. Fish and Wildlife Service, National Wetlands Inventory, Surface Waters and Wetlands Mapper, 2019

Figure 4

National Wetlands Inventory Map

Water Quality Testing and the Existing Individual Wastewater System
Residents who use the beach park for recreational beach activities have expressed concerns over water quality, particularly high bacteria levels due to illness and infection experienced periodically by beach-users. Water Quality testing was conducted at five different locations at Miloli‘i Beach Park at high and low tides between March 9, 2020 and March 11, 2020 (see Appendix D of this EA). Testing was conducted in order to assess the existing individual wastewater system (IWS), and to provide recommendations for wastewater treatment options to reduce potential bacterial output to beach park waters from the existing restroom facilities. In general, the waters surrounding Miloli‘i Beach Park are being negatively impacted by enterococcus. The areas of greatest concentrations (Areas B, B-Freshwater, and C) are close in proximity and may be from similar groundwater sources such as upland residences or facilities. Samples near the entrance to the beach park and pavilion (Location B) were found to have the highest enterococcus levels, which exceeded the limit for recreation waters. The shallow marine cove fronting the beach park (Location D) was predicted to have the highest bacteria levels due to its proximity to the existing leach field. However, samples from this location were found to have the lowest enterococcus levels, well below the limits allowed for recreational waters.

A dye test originating at the comfort station’s septic tank was performed to trace effluent through the system. If the effluent and dye reached the ground water table, it was expected that the dye would be present in marine waters surrounding the beach park. No dye was observed in the adjacent marine waters through the investigation period and beach park users did not report observing any dye in the days following the investigation period.

The existing IWS system was completed and approved by DOH in December 2006. The IWS condition assessment completed on March 10, 2020 found that both the inflow and outflow side of the septic tank were full, while effluent levels were observed to be normal. Community residents have indicated that the septic tank is always full prior to pumping every three months. The IWS site investigation and assessment indicate that the existing IWS appears to be adequate during low to normal usage periods. However, the system may be undersized for the estimated weekend use. The feasibility study considered alternate wastewater system options, such as a holding system, evaporative toilet system, or prefabricated waterless restroom; however, these systems were generally considered possible but not recommended for the Miloli‘i Beach Park site conditions (see Appendix D for additional information).

IMPACTS AND MITIGATION MEASURES

The proposed project would have minimal effect on groundwater recharge because improvements would consist of the replacement of existing park facilities. Existing drainage patterns with respect to adjacent properties would be maintained. Proposed drainage improvements would follow existing drainage patterns. The proposed site is currently divided into two drainage basins. One basin conveys the majority of runoff generated from the project site to the ocean. The second basin conveys runoff from the northeastern portion of the site towards Miloli‘i Road. Precipitation falling on the site would discharge into the ground or flow to these drainage basins as it does under existing conditions, and off-site runoff would not increase as a result of the proposed project.

Construction activities disturbing one or more acres are regulated under the National Discharge Elimination System (NPDES) stormwater program and are required by the State to obtain a NPDES permit. Because the project would disturb approximately 0.44 acres (less than one acre), a construction NPDES permit would not be required. However, construction activities could result in adverse impacts to water quality, including erosion and increased sedimentation in storm water runoff.

The proposed action includes site-specific BMPs to be implemented during construction in order to prevent any stormwater, sediment, soil, and debris resulting from the proposed construction from adversely impacting the coastal ecosystem or adjacent properties. Compliance with BMPs for construction would minimize impacts to water quality. Further, all earthwork grading operations would be conducted in compliance with dust and erosion control requirements of Hawai'i County Code Chapter 10, *Erosion and Sedimentation Control*.

Based on the Water Quality Investigation it was found that while waters surrounding MBP are being negatively impacted by enterococcus, waters closest to the leach field had the lowest enterococcus measured. There were also no signs of effluent leaching from the dye test performed. Based on these findings, it appears that the existing IWS is sufficient for handling normal day-to-day flows. The proposed accessibility improvements project would not increase park use, and there would be no potentially increased water quality impacts from the IWS as a result of the project. Further investigation and testing during high usage periods is recommended, in addition to increasing the frequency of pumping from once every three months to once a month. This will help determine if the existing IWS is functioning properly during high usage periods and determine an approximate high-usage population.

There would be no work within coastal waters with implementation of the proposed accessibility improvements. The replacement pavilion would be approximately 22 feet set back from the existing sea wall, and the end of the new path at the BBQ area is approximately 20 feet from the shoreline. A Shoreline Certification was approved for the project to verify setback distances on October 31, 2019 (see Appendix C). Because no work would occur in the water, a Department of the Army permit from the U.S. Army Corps would not be required. No long-term or cumulative adverse effects to hydrology or water quality are anticipated with implementation of the proposed action. For a discussion of impacts due to soil erosion and off-site sediment transport, see Section 3.1, *Geology, Topography, and Soils*. For a discussion of impacts due to flooding, see Section 3.3, *Natural Hazards*.

3.3 NATURAL HAZARDS

Natural hazards in the project region include earthquakes, volcanic activity, waves and storms, flooding from hurricanes and tropical storms, and tsunamis. Climate change and the related sea level rise will also impact the Hawaiian Islands. According to USGS hazard ratings, the Overall Hazard Assessment (OHA) for the Miloli'i region is moderate (4).

Earthquake and Volcanic Hazards

Most of the earthquakes in Hawai'i are directly related to volcanic activity and are caused by magma moving beneath the earth's surface. Numerous small earthquakes are reported each year, mostly on Hawai'i Island. For the most part, earthquakes on Hawaii are concentrated beneath Kilauea and Mauna Loa, particularly beneath the south flanks of both volcanoes. As stated in Section 3.2, Geology, Topography, and Soils, the project area is located on the flat coastal plain off of the southwest slope of Mauna Loa. According to FEMA earthquake hazard maps, the project area is located within Seismic Design Category D, which means it could experience strong shaking with sustained damage to poorly designed or built structures (FEMA 2019). Strong earthquakes in Hawai'i's past have destroyed buildings, water tanks, and bridges, and have disrupted water, sewer, and utility lines. Miloli'i lies in lava flow hazard Zone 23. The volcanic/seismic hazard is high along the Miloli'i coast due to recent volcanism and significant seismicity associated with eruptions of Kilauea Volcano (USGS undated).

Tsunami and Flood Hazards

The Federal Emergency Management Agency (FEMA) maps the project site as predominantly Zone X[4] with a very small portion within floodway areas designated as Zones AE and VE (see Figure 5). Flood Zone AE as defined for the project area applies to lands within the 100-year flood zone with a Base Flood Elevation of 7 feet (FEMA 2017). Flood Zone VE as defined for the project area applies to lands within the coastal flood zone with velocity hazard (wave action) with a Base Flood Elevation of 10 feet (HNFIP 2019).

The project site is located within the tsunami inundation zone (HNFIP 2019). High waves are only a moderately low threat where annual wave heights from south swell are generally only 1 to 4 feet. Storms are ranked moderately high hazard because Miloli'i faces west toward approaching Kona Storms and the typical track of passing tropical cyclones. The rocky coast of the project area is relatively effective at withstanding denudation, so erosion is moderately low (USGS undated).

Climate Change and Sea Level Rise

Global Warming is a public health and environmental concern around the world. As global concentrations of atmospheric greenhouse gases increase, global temperatures increase, weather extremes increase, and air pollution concentrations increase. Global warming and climate change have been observed to contribute to poor air quality, rising sea levels, melting glaciers, stronger storms, more intense and longer droughts, more frequent heat waves, increases in the number of wildfires and their intensity, and other threats to human health (IPCC 2013, 2022). The five warmest years in the 1880–2019 record have all occurred since 2015, while nine of the 10 warmest years have occurred since 2005; the year 2019 was the second warmest year in the 140-year record (NOAA 2020).

---

[3] Zone 1 represents the areas that are most hazardous and Zone 9 the least hazardous.

[4] Zone X includes areas of minimal flood hazards, which area areas determined to be outside the 0.2 percent annual chance of flood.

The influences of climate change on global and local ecosystems are varied and often detrimental. In Hawai‘i, the rate of warming air temperature has quadrupled in the last 40 years to over 0.3°F (0.17°C) per decade. Higher temperatures are projected to result in native plant and animal stress, an increase in heat-related illnesses and vector-borne diseases such as dengue fever, and a higher concentration of invasive species. Additional impacts are projected to include a decrease in trade winds and overall disruption of rainfall patterns; warmer oceans and higher ocean acidity, which could lead to coral bleaching; and a rise in sea levels. Projected sea-level rise will undoubtedly increase erosion and flooding statewide and expose coastal communities to greater hazards (University of Hawai‘i 2014).

Sea-level rise has had dramatic impacts on the beaches along this coast. Between 1940 and 1980, the shoreline at Honomalino beach, located approximately one mile south of Miloli‘i, moved 200-300 feet landward (USGS undated). Sea-level rise hazard is ranked high in the low-lying segments south of Ho‘opuloa, including the project area (USGS undated).

According to a recent report by the Hawai‘i Climate Change Mitigation and Adaptation Commission (2017), potential sea level rise could result in low-lying coastal areas around the island to become chronically flooded within the mid- to latter-half of this century. This land will become submerged by coastal erosion, direct marine flooding from tides and waves, or become new wetlands behind the shoreline from rising water tables and reduced drainage.

The Hawai‘i Sea Level Rise Report and Hawai‘i Sea Level Rise Viewer[5] document the modeled potential future exposure of each island to multiple coastal hazards as a result of sea level rise. For the island of Hawai‘i, the Sea Level Rise Exposure Area (SLR-XA) is the footprint of passive inundation, one of three flooding hazards with sea level rise, including passive inundation (flooding), coastal erosion, and annual high wave runup (Romine, et. al. 2020). These hazards were modeled for four future sea level rise scenarios, including 0.5 feet, 1.1 feet, 2.0 feet, and 3.2 feet. The 3.2-foot projection of sea level rise is considered an “intermediate” scenario by 2100 and an “extreme” scenario as soon as 2060 (Romine, et. al. 2020). Based on modeling predictions, areas of Miloli‘i Beach Park would be vulnerable to chronic flooding with 3.2 feet of sea level rise. There is an existing seawall along most of the shoreline of the project site.

IMPACTS AND MITIGATION MEASURES

Natural Hazards

Construction of the proposed park accessibility improvement project would not result in increased flooding or hazards from flooding in surrounding areas. The proposed pavilion location would be shifted south of the existing location and away from the shoreline. The new pavilion would be relocated outside of Flood Zone VE, a coastal flood zone (see Figure 5).

The rules and regulations of the National Flood Insurance Program (NFIP), Title 44 of the Code of Federal Regulations (44CFR), are in effect when development falls within a Special Flood Hazard Area (high risk areas). State projects are required to comply with 44CFR regulations as stipulated in Section 60.12. Local community flood ordinances may stipulate higher standards that can be more restrictive and would take precedence over the minimum NFIP standards. The proposed

[5] All sea level rise results from the hazard modeling and vulnerability assessment can be viewed on the Hawai‘i Sea Level Rise Viewer (http://hawaiisealevelriseviewer.org/).

improvements would be designed and constructed in conformance with the standards and requirements of the Hawai‘i County Code, Chapter 27, *Floodplain Management*. In accordance with Section 27-23(1), all new construction in a coastal high hazard area must be constructed with materials and utility equipment resistant to flood damage and using methods and practices that minimize flood damage. All development permits would be reviewed for consistency with the requirements of the Hawai‘i County Code prior to approval.

The proposed facilities would be designed in accordance with County requirements and good engineering practice, which would minimize damage during tropical storm, hurricane, or strong wind events, and earthquake events. No significant environmental effects would result, and no mitigation would be necessary. No significant long-term or cumulative adverse environmental effects would result from natural hazards, and no mitigation would be necessary.

Climate Change and Sea Level Rise

Greenhouse gas emissions would be generated from the proposed accessibility improvement project during construction and operation. Temporary greenhouse gas emissions would occur during construction activities, predominantly from vehicle and equipment exhaust. No increase in operational greenhouse gas emissions are anticipated – limited emissions would continue from maintenance/work vehicles accessing the site and from beach park visitor vehicle trips. Greenhouse gas emissions would not be expected to be significant, and the project would not be expected to make a substantial contribution to the cumulatively significant impact of global warming and climate change.

The project site is located along the shoreline. According to data from the Hawai‘i Sea Level Rise Viewer, a portion of the project site could be vulnerable to sea level rise exposure in the long-term, including a portion of the proposed pavilion and some of the camping area. While the sea level rise exposure modeling indicates that the project site parcel could be vulnerable to the effects of SLR, the model does not consider changes in flooding behavior due to the existing sea wall shore protection system. The existing seawall is identified as protection from SLR, one of the primary sea level rise adaptation strategies outlined by the *Guidance for Using the Sea Level Rise Exposure Area in Local Planning and Permitting Decisions* (Romine, et. al. 2020). The top of the existing sea wall is approximately five to seven feet above current sea level along the project site. Therefore, the existing sea wall could provide some level of protection to the project site against flooding not currently shown in the SLR-XA modeling. Because the proposed pavilion would be set back further from the shoreline than it is currently, the proposed project would reduce sea level rise exposure under the 3.2 feet scenario compared to existing conditions. Considering the existing protection from the sea wall, the project site includes features that could lower future risks from sea level rise.

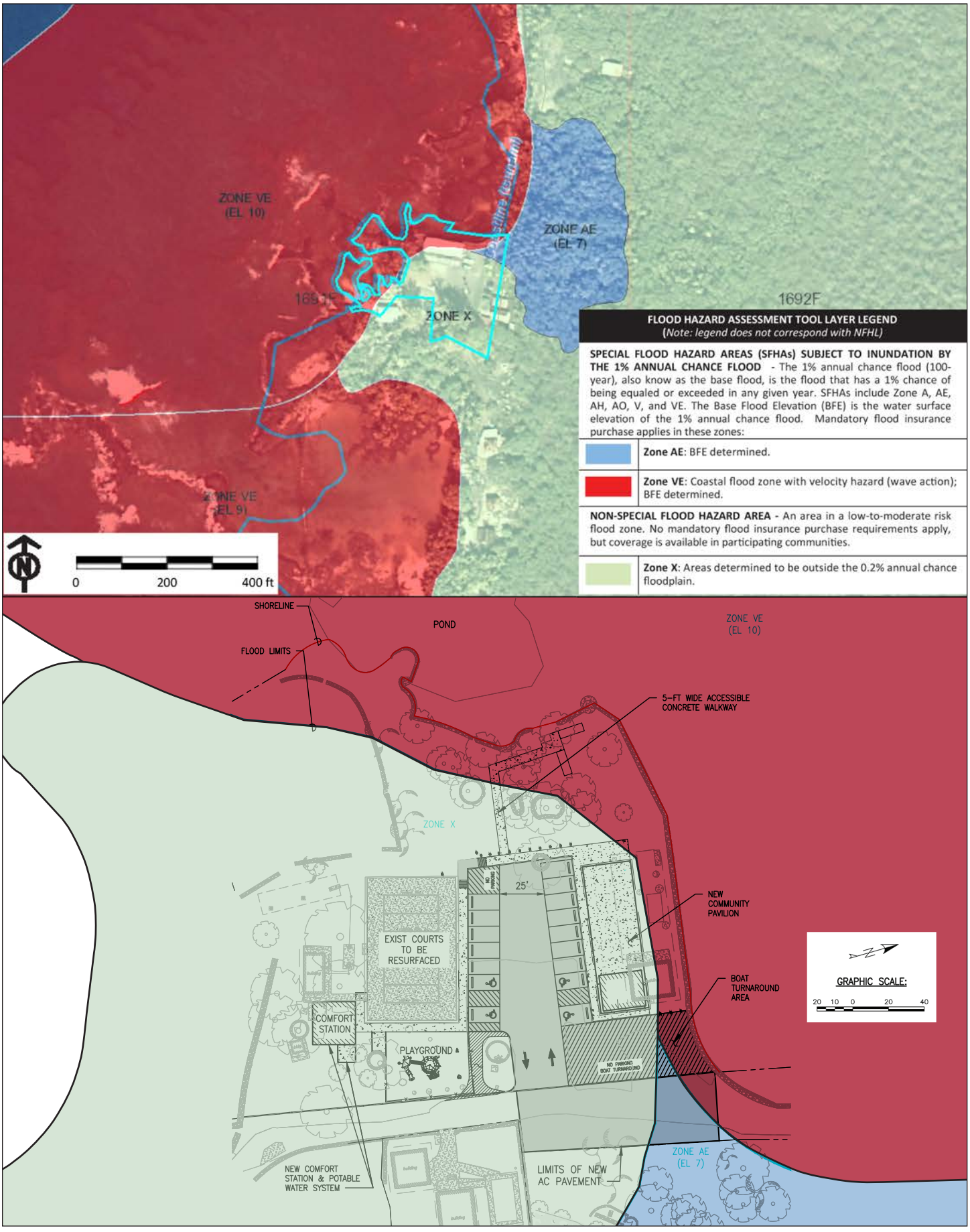

Miloli'i Beach Park Accessibility Improvement

SOURCE: Hawai'i National Flood Insurance Program 2019

Figure 5

Flood Hazard Map

3.4 BIOLOGICAL RESOURCES

The project parcel consists of a 1.41-acre area that has been highly modified and developed with park facilities and parking areas. Vegetation at the beach park project area includes Ironwood trees, milo trees, coconut palms, noni plants, and night-blooming cereus. There are several Ironwood trees and ornamental plants surrounded by rock rings throughout the site. This area provides habitat for common animals, including, but not limited to, birds, mongoose, feral cats and dogs, and mice and rats. Due to the previously disturbed nature of the project site, the project site has limited potential for sensitive biological resources to occur.

The U.S. Fish and Wildlife Service (USFWS) submitted comments on the Draft EA (see Appendix A, Draft EA Comment Letters). The USFWS identified ten listed species that could occur in the immediate vicinity of the project area: the federally endangered Hawaiian hoary bat, the threatened Hawaiian goose, endangered Hawaiian stilt, endangered Hawaiian coot, endangered Hawaiian duck, the threatened Green sea turtle, endangered Hawksbill sea turtle, endangered Hawaiian yellow-faced bees, endangered *Procaris* hawaiana, endangered *Vetericaris chaceorum*, endangered Pacific damselfly, and the endangered Orange-black. Additionally, the endangered Hawaiian petrel, band-rumped storm-petrel, and the threatened Newell's shearwater may transit the project area flying to upland breeding colonies.

IMPACTS AND MITIGATION MEASURES

While the project site is highly modified and developed with park facilities, construction activities would result in short-term disturbances to wildlife in the project vicinity. Potential impacts to protected species that may occur in the project area as identified by the USFWS are described below.

Hawaiian hoary bat. The federally endangered Hawaiian hoary bat roosts in both exotic and native woody vegetation across all islands and will leave young unattended in trees and shrubs when they forage. If trees or shrubs 15 feet or taller are cleared during the pupping season, there is a risk that young bats could inadvertently be harmed or killed since they are too young to fly or may not move away. Additionally, Hawaiian hoary bats forage for insects from as low as 3 feet to higher than 500 feet above the ground and can become entangled in barbed wire used for fencing. To avoid and minimize impacts to the endangered Hawaiian hoary bat, the USFWS provides the following recommendations:

- Do not disturb, remove, or trim woody plants greater than 15 feet tall during the bat birthing and pup rearing season (June 1 through September 15).
- Do not use barbed wire for fencing.

Hawaiian goose. The federally threatened Hawaiian goose (*nēnē*) are observed in a variety of habitats, but prefer open areas, such as pastures, golf courses, wetlands, natural grasslands and shrublands, and lava flows. Threats to the species include introduced mammalian and avian predators, wind facilities, and vehicle strikes. To avoid and minimize potential project impacts to Hawaiian geese, the USFWS provides the following recommendations:

- Do not approach, feed, or disturb Hawaiian geese.

- If Hawaiian geese are observed loafing or foraging within the project area during the breeding season (September through April), have a biologist familiar with the nesting behavior of *nēnē* survey for nests in and around the project area prior to the resumption of any work. Repeat surveys after any subsequent delay of work of 3 or more days (during which the birds may attempt to nest).
  - ◊ Cease all work immediately and contact the USFWS for further guidance if a nest is discovered within a radius of 150 feet of proposed work, or a previously undiscovered nest is found within said radius after work begins.
- In areas where Hawaiian geese are known to be present, post and implement reduced speed limits, and inform project personnel and contractors about the presence of endangered species on-site.

Green and Hawksbill sea turtles. The green sea turtle that occurs in Hawai'i is federally-listed as a threatened species and as a threatened subspecies under Hawai'i regulations. Hawksbill sea turtle is much less common in the Hawaiian Islands than green sea turtle and is known to nest only in the southern reaches of the state. Hawksbill sea turtle is federally-listed as endangered and is also listed as an endangered subspecies under Hawai'i regulations.

Construction on, or in the vicinity of, beaches can result in sand and sediment compaction, sea turtle nest destruction, beach erosion, contaminant and nutrient runoff, and an increase in direct and ambient light pollution which may disorient hatchlings or deter nesting females. Off-road vehicle traffic may result in direct impacts to sea turtles and nests, and also contributes to habitat degradation through erosion and compaction. Nesting turtles may be deterred from approaching or laying successful nests on lighted or disturbed beaches.

No construction would occur at the shoreline with implementation of the project. The replacement pavilion would be approximately 22 feet set back from the existing sea wall, and the end of the new path at the BBQ area is approximately 20 feet from the shoreline. To avoid and minimize potential project impacts to sea turtles and their nests, the USFWS provides the following applicable recommendations:

- Implement site-specific BMPs regarding sedimentation and erosion in aquatic environments identified in the project description and as recommended by the USFWS.
- Have a biologist familiar with sea turtles conduct a visual survey of the project site to ensure no basking sea turtles are present.
  - ◊ If a basking sea turtle is found within the project area, cease all mechanical or construction activities within 100 feet until the animal voluntarily leaves the area.
- Avoid nighttime work during the nesting and hatching season (May to December).
- Minimize the use of lighting and shield all project-related lights so the light is not visible from any beach.
  - ◊ If lights can't be fully shielded or if headlights must be used, fully enclose the light source with light filtering tape or filters.

Hawaiian stilt, Hawaiian coot, and Hawaiian duck. Listed Hawaiian waterbirds are found in fresh and brackish-water marshes and natural or man-made ponds. Hawaiian stilts may also be found wherever standing water may occur. Hawaiian waterbirds attracted to sub-optimal habitat such as ponding water may suffer adverse impacts, such as predation and reduced reproductive

success, and thus the project may create an attractive nuisance. To avoid and minimize potential project impacts to Hawaiian waterbirds, the USFWS provides the following recommendations, as applicable:

- In areas where waterbirds are known to be present, post and implement reduced speed limits, and inform project personnel and contractors about the presence of endangered species on-site.
- Implement site-specific BMPs regarding sedimentation and erosion in aquatic environments identified in the project description and as recommended by the USFWS
- Have a biological monitor that is familiar with the species' biology conduct Hawaiian waterbird nest surveys where appropriate habitat occurs within the vicinity of the proposed project site prior to project initiation. Repeat surveys again within 3 days of project initiation and after any subsequent delay of work of 3 or more days (during which the birds may attempt to nest). If a nest or active brood is found:
    - ◊ Contact the Service within 48 hours for further guidance.
      Establish and maintain a 100-foot buffer around all active nests and/or broods until the chicks/ducklings have fledged. Do not conduct potentially disruptive activities or habitat alteration within this buffer.
    - ◊ Have a biological monitor that is familiar with the species' biology present on the project site during all construction or earth moving activities until the chicks/ducklings fledge to ensure that Hawaiian waterbirds and nests are not adversely impacted.

Hawaiian petrel, Newell's shearwater, and band-rumped storm petrel. Hawaiian seabirds may traverse the project area at night during the breeding, nesting and fledging seasons (March 1 to December 15). Outdoor lighting could result in seabird disorientation, fallout, and injury or mortality. Seabirds are attracted to lights and after circling the lights they may become exhausted and collide with nearby wires, buildings, or other structures or they may land on the ground. Downed seabirds are subject to increased mortality due to collision with automobiles, starvation, and predation by dogs, cats, and other predators. Young birds (fledglings) traversing the project area between September 15 and December 15, in their first flights from their mountain nests to the sea, are particularly vulnerable.

The proposed project includes minimal additional nighttime lighting for the restrooms, security lighting for the pavilion, and area lighting along the accessible paths. Project design would reduce nighttime glare effects with low level footpath lighting and timered lights. All lighting would be properly shaded to ensure that artificial light does not travel across property boundaries or toward the shoreline and ocean waters pursuant to HRS Section 205A-30.5(a) and 205A-2(c)(10). Therefore, adverse effects to seabirds due to nighttime lighting would be minimized with project features.

Hawaiian yellow-faced bee. Coastal populations of yellow-faced bees occur in habitat along rocky shorelines with *naupaka* and tree heliotrope with either landscaped vegetation, alien kiawe, or bare rock inland. Threats to yellow-faced bees include habitat destruction and modification from land use change, nonnative plants, ungulates, and fire, along with predation by nonnative ants and wasps. To avoid and minimize project impacts to yellow-faced bees and their nests, the USFWS provides the following recommendations, as applicable:

- If an action will occur in or adjacent to known occupied habitat, a buffer area around the habitat may be required and can be worked out on a site-specific basis through consultation with the Service.
- For coastal species, protect all coastal strand habitat from human disturbance, including:
  - ◊ No fires or wood collecting
  - ◊ Leave woody debris in place
  - ◊ Restrict vehicles to existing roads and trails
  - ◊ Post educational signs to inform people of the presence of sensitive species.

Anchialine pool shrimp (*Procaris* hawaiana and *Vetericaris chaceorum*), Hawaiian damselfly, Orangeblack Hawaiian damselfly. These anchialine pool shrimp are found in seepage-fed pools or anchialine pools and coastal wetlands, and Hawaiian damselflies are found in aquatic habitats across the islands. Breeding habitat for the damselfly includes anchialine pools, perennial streams, marshes, ponds, and even artificial pools and seeps. The USFWS recommended, site-specific BMPs regarding sedimentation and erosion in aquatic environments identified in the project description would minimize the degradation of water quality and impacts to fish and wildlife resources. Since no work would occur within any water bodies, no surveys for this species would be required.

Anchialine Pools. *P. hawaiana* is restricted to a small number of anchialine pools on Hawaii and Maui, while *V. chaceorum* is found in only two anchialine pool areas of Hawaii. Threats to these species include habitat loss due to in-filling and bulldozing of anchialine pools, waste disposal including used oil and grease into pools, nonnative fish, human use of pools for bathing, water extraction, in-flow of fertilizer and pesticides, and collection for the aquarium trade. The USFWS recommended, site-specific BMPs regarding sedimentation and erosion in aquatic environments identified in the project description would minimize the degradation of water quality and impacts to fish and wildlife resources. The USFWS provides the following additional recommendations, as applicable:

- Protect anchialine pools (both in and around) from the following human disturbance:
  - ◊ Restrict vehicles to existing roads and trails
  - ◊ Prevent trash, and other waste from entering into anchialine pools
  - ◊ Avoid or limit to the maximum extent practicable entrance into the anchialine pools
- Install educational signs near anchialine pools to inform people of the presence of sensitive species and habitats.

Summary

Temporary effects during construction would include increased traffic, noise, and overall activity, which could result in short-term disturbances to plants and wildlife in the project vicinity. During construction, site-specific BMPs developed as part of the permitting process and avoidance measures included in this section would minimize erosion and sedimentation and potential adverse effects to wildlife in the vicinity of the project site. No adverse long-term effects to biological resources would occur with implementation of minimization measures above.

3.5 HISTORIC, ARCHAEOLOGICAL, AND CULTURAL RESOURCES

An Archaeological Inventory Survey (AIS) was completed for the project site (Haun & Associates 2022). The objective of the AIS is to satisfy current historic preservation regulatory review inventory

requirements of the Department of Land and Natural Resources-State Historic Preservation Division (DLNR-SHPD), as contained within Hawai‘i Administrative Rules, Title 13, DLNR, Subtitle 13, Chapters 275 and 276, State Historic Preservation Rules.

In order to assess the potential for encountering archaeological or historic resources, the archaeological survey included the following:

- Relevant archaeological and historical documents were reviewed (including examination of Land Commission Awards, ahupua‘a records, historic maps, archival materials, archaeological reports, and a high-intensity pedestrian survey of the project area was completed.
- A detailed recording of all potentially significant sites was completed.
- Limited subsurface testing was conducted to assess the potential for cultural materials.
- Background research and field data were analyzed to determine significance

Much of the information in the archaeological survey was obtained from *Pa‘a Pono Miloli‘i*. The following sections are summarized from the AIS.

Historical Background

The project area is located in the ahupua‘a of Miloli‘i in the district of South Kona. Miloli‘i is translated as a "fine twist" (Wehewehe.org), in reference to an expert sennit twister from the area who created cordage from *olanā* bark that was used to make fishing nets. There is an alternative translation for Miloli‘i, or "small swirling," which is in probable reference to ocean currents in the area. Established as a settlement dating back to the early Polynesian seafarers from the South Pacific, Miloli‘i families have been fishing the offshore and nearshore waters for generations.

The project area is located in a traditional sub-district of South Kona called Kapalilua. There are several early historic references to the remote area. According to Fornander in "An Account of the Polynesian Race" (1885), Kapalilua was given to Napunanahunui-a-Umi, daughter of Umi, and these lands were held by her descendants until the arrival of Kamehameha I. It is noted that Kamehameha I apparently visited the Kapalilua area due to his love of *‘ahi* fishing. The lands of Kapalilua were later given to a displaced Maui chief, Keaweaheulu, for his assistance to Kalani‘opu‘u during battles with Kahekili between 1777 and 1779.

In the 1840s, the Great Māhele redistributed land as proposed by King Kamehameha III. A third of the land was relocated to the monarch as Hawaiian crown lands. Another third was allocated among the *ali‘i* and *konohiki* (chiefs and managers of the *ahupua‘a*). The remaining third was given to the *maka‘āinana* (common people). However, the law required land claims to be filed within two years under the Kuleana Act of 1850, and many Hawaiians made no claim. The Kuleana Act also allowed foreigners to purchase fee simple lands. During the Māhele, four Land Commission Award (LCA) claims were made for parcels within Miloli‘i Ahupua‘a. There are no records of LCAs within the project area.

The project area has been historically affected by tsunamis. According to records, 22 tsunamis impacted the Hawaiian Islands between 1819 and 1975. The Miloli‘i area was impacted by tsunamis in 1868, 1946, 1957, and 1960. The 1868 tsunami destroyed the entire village of Miloli‘i, though no lives were lost.

Project Site Features

The Hauʻoli Kamanaʻo Congregational Church is located adjacent to the project site on the inland side of the Miloliʻi Road. According to the *Paʻa Pono Miloliʻi* website, the church was constructed in 1865 under the direction of Reverend Paris. The current Miloliʻi Road, that extends along the inland side of the project area, existed as early as 1914.

The project site is the former location of the Miloliʻi School, which closed in 1966; the land was conveyed to the County of Hawaiʻi in 1969. According to Jeff Ochi, Project Parks Manager for the County of Hawaiʻi, Department of Parks and Recreation, the school structures were removed when it was closed; however, the basketball court was in existence when the school was in operation. The restroom facility was constructed in late 1986/early 1987, and the covered pavilion was built before 2006.

Previous Archaeological Research

A search of the DLNR archives indicates that at least 15 archaeological studies have been conducted in the general vicinity of the project area. Two sites were identified in the Miloliʻi area consisting of several graves and a pool and the district of Miloliʻi.

According to information presented in an environmental assessment for the Miloliʻi Community Enrichment and Historical Center (Farber & Associates 2012), the project area and surrounding vicinity were surveyed between 1973 and 1974 during the Statewide Inventory of Historic Places Survey. However, there was little information availabe from SHPD on sites identified in the area.

Consultation

As part of the environmental analysis completed for a previous project in Miloliʻi, a series of oral history interviews were conducted with seven *kūpuna* (elder) raised in Kapalilua with the primary aim of examining changes in the traditional fishing practices of the region (Maly and Maly 2003). Nearly all of the interviewees commented on changes they had observed in the quality of the fisheries, and the declining abundance of fish—noting that there were significant declines in almost all areas of the fisheries, from near-shore to the deep sea. No specific information regarding the Miloliʻi School or project site in particular was included.

The Miloliʻi Beach Park is an important community resource. The Hālau pavilion was built by the community before 2006, and is used for community gatherings and as a community library and education center. The beach park is used by the local community for a variety of recreational and cultural activities, including sports, swimming and snorkeling, fishing, and camping. In efforts to ensure the local community was involved in discussions regarding the proposed beach park accessibility improvements, the Department of Parks and Recreation scheduled community meetings at the Hālau pavilion on October 18, 2019, and November 3, 2019. Due to the circumstances of COVID-19, a third meeting was delayed until May 16, 2021, to follow-up on community concerns previously identified (these meetings are summarized in Section 6.2 of this EA and written comments from the community are included in Appendix A). A frequently identified concern was that the project was changing the park with the intention for increased tourist visitation. As communicated at the community meetings, the proposed project was initiated to meet the federal mandate for ADA compliance; the project would not make any changes to the existing uses of the beach park, and the Hālau pavilion would remain under control of the community. The intended use of the park is for the Miloliʻi Village community. An additional informal meeting on June 21, 2022 with park staff and several members of the community identified some specific design needs of

the new PV electrical system, the need for a service window at the pavilion, and insulation in the pavilion storage area to minimize heat build-up. The Department of Parks and Recreation will continue to work with the community during implementation of the accessibility improvements project.

IMPACTS AND MITIGATION MEASURES

The archaeological inventory survey identified three historic single feature sites. These project site features consist of an erosion control retaining wall, a discontinuous boundary wall, and an historic basketball court. The retaining wall functions to prevent coastal erosion, while the boundary wall separates the project area from an adjacent house lot. The basketball court represents the only surviving remnant of the actual school facility, and based on County records, the court is at least 50 years old, making it an historic property. The mapping, written description and photography of the three sites provide adequate documentation, and no further work or preservation is required. The SHPD completed Chapter 6E-8 Historic Preservation Review for the project and transmitted their determination dated July 18, 2022 to the Department of Parks and Recreation. The SHPD determined that the AIS report prepared for the project satisfied the requirements of HAR Section 13-276-5, and accepted the conclusions found therein. (See Appendix B for the SHPD letter and a copy of the AIS.)

Based on the preceding information, limited remnants of the historic Miloli‘i School, excluding the basketball court, remain within the project area. The effects of multiple tsunamis and the historic impacts to the property by the construction and use of the school suggests that no pre-contact archaeological sites or features are likely to be encountered. While there is low probability of encountering archaeological sites in this area, in the event that historic resources, including human skeletal remains, are identified during the construction activities, all work would cease in the immediate vicinity of the find, the find would be protected from additional disturbance, and the State Historic Preservation Division would be notified pursuant to Section 13-280-3, HAR. In the event that *iwi kūpuna* and/or cultural finds are encountered during construction, cultural and lineal descendants of the area should be consulted to develop a reinterment plan and cultural preservation plan for proper cultural protocol, curation, and long-term maintenance.With documentation of these sites, no adverse effect to cultural, historic, or archaeological resources would occur.

The State of Hawai‘i’s environmental review process also requires consideration of the proposed project’s potential effects on cultural practices and cultural features in order to “promote responsible decision making” (Section 343, HRS). These cultural practices and features may include traditional cultural properties, which are designated significant historic properties that “have an important value to the native Hawaiian people or to another ethnic group of the state due to associations with cultural practices once carried out, or still carried out, at the property or due to associations with traditional beliefs, events or oral accounts—these associations being important to the group’s history and cultural identity” (Sections 13-275-6 and 13-284-6, HAR). The intent of the assessment is to “analyze the impact of a proposed action on cultural practices and features associated with the project area” (Office of Environmental Quality Control 1997). The County aims to provide ongoing beach park access during construction of the proposed improvements. If access to the boat turn around is limited any time during construction, the village community would be notified in advance. Because the proposed project represents a continuation of existing uses and would not negatively impact access to the shoreline, or affect designated significant historic properties, it is reasonable to conclude that, pursuant to Act 50, the exercise of Native Hawaiian rights, or any ethnic group,

related to gathering, access, or other customary activities within the project area would not be affected, and there would be no direct adverse effect upon cultural practices or beliefs.

3.6 AIR QUALITY AND CLIMATE

Hawai'i receives most of its precipitation during the winter months (October to April). Flooding is more likely during this wet period, and stream flows decrease during drier conditions from May to September. The temperature in the general area ranges from 65 to 80 degrees Fahrenheit (F), with a mean annual average of approximately 72.5 degrees F (U.S. Climate Data 2019). Mean annual rainfall in the project area is about 30 inches (Giambelluca et. al. 2013).

The Department of Health, Clean Air Branch (CAB), monitors the ambient air in the State of Hawai'i for various gaseous and particulate air pollutants. The U. S. Environmental Protection Agency (EPA) has set national ambient air quality standards (NAAQS) for six criteria pollutants: carbon monoxide, nitrogen dioxide, sulfur dioxide, lead, ozone, and particulate matter (PM_{10} and $PM_{2.5}$). Hawai'i has established state ambient air standards for all of these pollutants (except for $PM_{2.5}$) in addition to hydrogen sulfide, a product of volcanic emissions (CAB 2020). The primary purpose of the statewide monitoring network is to measure ambient air concentrations of these pollutants and ensure that these air quality standards are met.

In 2020, there were 11 air monitoring stations on the island of Hawai'i. The majority of stations are located on the island of Hawaii to measure air quality impacts from the volcano and geothermal energy production. There are monitoring stations located in Ocean View and Kona, in the general vicinity of the project site. According to the State of Hawai'i Department of Health Annual Summary 2020 Air Quality Data, criteria and pollutant levels in the State remained below all federal and state ambient air quality standards (excluding exceedances due to volcanic activity) (CAB 2020).

IMPACTS AND MITIGATION MEASURES

Construction of the proposed project could result in temporary air quality effects, including exhaust emissions from construction vehicles and dust generated by short-term construction related activities. Components of construction emissions include employee trips, exhaust emissions from construction equipment, and fugitive dust emissions. Earthwork and grading within the project area could generate airborne dust particulates.

Dust control measures such as watering and sprinkling will be implemented as needed to minimize wind-blown dust. To minimize construction-related exhaust emissions, project contractors will ensure that all internal combustion engines are maintained in proper working order. All construction work will be in conformance with the air pollution control standards contained in HAR, Title 11, Chapter 59, "Ambient Air Quality Standards," and Chapter 60, "Air Pollution Control," which would minimize air quality emissions.

Once completed, the proposed accessibility improvements are not anticipated to result in increased beach park visitation and associated vehicle trips. The proposed project would not result in any increased air emissions, and there would be no long-term adverse air quality impacts associated with the proposed action. Other than vehicles visiting the project site, there are no air contaminant sources in the immediate project area.

3.7 NOISE

The project site is located in the coastal community of Miloli‘i, with the church to the east, a residence to the south, and tidal pools of the Pacific Ocean to the west and north. Surrounding noise levels in the vicinity of the project site are considered relatively low. Existing noise sources include the sound of the wind and ocean, occasional vehicular traffic on Miloli‘i Road, and church events.

IMPACTS AND MITIGATION MEASURES

Noise impacts from a project can be categorized as those resulting from construction and those from operational activities. Construction noise would have a short-term effect; operational noise would continue throughout the lifetime of the project. Implementation of the proposed accessibility improvements could temporarily increase noise levels during construction. Noise from construction activities is regulated under Title 11, Chapter 46, Community Noise Control, of the State DOH's Administrative Rules. The zoning district classification and maximum permissible sound levels are outlined in HAR Section 11-46-4. The project falls under the Class A zoning district category that applies to properties zoned for public space, open space, and conservation types of land uses. The maximum permissible noise level for this site under Class A is 55 dBA at the property line during daytime and 45 dBA during nighttime. Typical ranges of construction equipment noise vary between 70 and 95 dBA. Therefore, earthmoving activities could temporarily increase noise levels during construction above maximum allowable limits that would impact nearby existing uses.

A Community Noise Permit for construction activities may be required by the Department of Health. Prior to construction, consultation with the state Department of Health will occur to determine permitting requirements. Should the permit be required, allowable construction conditions will be specified. Construction will be confined to 7 a.m. to 6 p.m., Monday through Friday, and 9 a.m. to 6 p.m. on Saturday. No construction activities exceeding maximum allowable noise levels will occur on Sundays and holidays without prior notice. Construction activities will comply with HAR Chapter 11-46, Community Noise Control.

There would be no long-term increase in noise during project operations since the project accessibility improvements would not generate additional traffic and associated noise.

3.8 VISUAL RESOURCES

The project area includes basic recreational facilities located along the coast. The project site consists of a covered pavilion, a basketball/volleyball court, parking areas, a restroom, and firepits. From the project site, there are views of tidal pools and Miloli‘i Bay in the short and long range.

IMPACTS AND MITIGATION MEASURES

During construction, workers, materials, and equipment would be visible from the church to the east and the residence to the south, and from motorists on Miloli‘i Road. Visual impacts during construction would be temporary and intermittent.

The proposed project would introduce minimal additional lighting to the project site for the restrooms and area lighting along accessible paths. Because of the isolated nature of the project site and unlit night sky ideal for nighttime star visibility, these lights could produce nighttime glare

effects. Project design would reduce nighttime glare effects with low level footpath lighting and timered lights. All lighting would be properly shaded to eliminate light trespass and preserve the isolated and dark environmental of the project area. Therefore, potential light and glare impacts from project lighting would be less than significant.

Since the proposed project consists of accessibility improvements and replacement of existing uses at the Miloli‘i Beach Park, the proposed project would not significantly change the scenic and visual character of the surrounding area.

3.9 SOCIAL AND ECONOMIC CHARACTERISTICS

In both urban and rural areas, the County of Hawai‘i has relatively low population density, though there has been a marked growth in population. In 2017, the population in the South Kona District included an estimated 11,193 persons, with 3,949 persons in the Captain Cook area (DBEDT 2019). From 2010 to 2017, there was a 12 percent increase in population for the district, which is the second most of all the places in the area (Captain Cook showed a 15.2 percent increase in population, while the state of Hawai‘i only experienced a 4.5 percent increase in population). In 2017, the *Pa‘a Pono Miloli‘i* website estimated that the village of Miloli‘i has about 200 residents (Pa‘a Pono Miloli‘i 2017). The population has increased since that time, with a community estimate of between 270 to 300 residents in the village alone as of March 2020, and over 500 people in the surrounding community.

The major economic activity for the South Kona district is agricultural, with its most important industries being coffee growing and processing, macadamia nuts, citrus fruits and cattle ranching (Hawaii County 2005). Other commodities include bananas, citrus crops, avocados, and vegetables and other truck crops.

The Miloli‘i Beach Park is an important recreational facility for residents in the area. According to the County of Hawai‘i General Plan, the South Kona District, compared to other districts, has fewer County facilities-based parks and beach parks in relation to the population (Hawaii County 2005). There are four developed beach parks and two beach park reserves in the district. Miloli‘i Landing, north of the Beach Park, is on state lands and contains a rocky shoreline and a boat ramp.

IMPACTS AND MITIGATION MEASURES

The proposed project is not anticipated to have significant, adverse impacts on the social and economic characteristics of the area. The proposed improvements would enhance the existing recreational facilities and provide handicap accessible features. The proposed project improvements would not generate any new permanent full-time jobs. Therefore, the primary economic effects would be associated with short-term construction jobs that would generate a small minor positive economic impact.

Implementation of the proposed action would not displace any residents or businesses since construction would occur within the existing footprint of the park facilities. Improvements planned under the proposed accessibility improvements project would not impact the number of housing units in the surrounding area and surrounding community of Miloli‘i because no housing units are included under this project.

3.10 UTILITIES AND PUBLIC SERVICES

The Miloli‘i Beach Park is not served by any utility services. Electricity is provided by solar panels with battery storage on the existing pavilion. Water for the comfort station is provided by privately operated water supply trucks. This water is non-potable and is only used to flush toilets and hand sinks. The project site is served by an on-site septic system. The park pavilion is the only public facility in the Miloli‘i community that is covered and can accommodate large groups for gatherings and events (Farber and Associates 2012).

The nearest fire 24-hour fire/EMS operations are located at Keauhou and Captain Cook. There is a volunter fire station located in Miloli‘i Village. There is a Hawai‘i County Police Department station in Kailua-Kona, approximately 40 miles north of the project site, and a Nā‘ālehu Station, approximately 30 miles south of the project site. The Kona Community Hospital is a full-service hospital located in Kealakehe, approximately 30 miles from the project site.

IMPACTS AND MITIGATION MEASURES

The proposed project includes the replacement of existing facilities and accessibility improvements at the Miloli‘i Beach Park. The proposed project includes provision of a new potable water storage system, including a water tank and booster pump(s), for the new comfort station. Potable water would be delivered by truck. No feature of the project would result in the need for new or altered services for fire or police protection, schools, libraries, parks, or health services. Because no new residences would be constructed on site, and no new employees would be drawn from the local labor pool, no increase in population would result from the proposed project. Therefore, no increases in the demands for public services such as schools, libraries, parks, health services, police, or fire protection would be expected, and no additional public facilities would need to be constructed. Further, activities at the proposed beach park accessibility improvements project site would not affect the provision of utilities and public services to adjacent land uses. Replacement of existing facilities and accessibility improvements planned are expected to have no negative long-term impact on utilities and public services.

For information regarding storm drainage, see Section IX, *Hydrology and Water Quality*.

3.11 TRAFFIC AND PARKING

Miloli‘i is a small, isolated village located approximately 45 miles from the Kona International Airport. Vehicle access to the project area is via Miloli‘i Road, a steep road that descends roughly 3,400 feet in elevation off of Mamalahoa Highway (Highway 11). Miloli‘i Road is a winding, two-lane country road, and Miloli‘i Beach Park is located approximately 5 miles along this roadway.

IMPACTS AND MITIGATION MEASURES

Construction of the proposed project could result in short-term increases in traffic. During construction of the proposed park accessibility improvements, there would be work vehicles using Miloli‘i Road. There is limited traffic on Miloli‘i Road, consisting of local traffic or beach visitor traffic. However, the County aims to provide ongoing beach parking and access during construction of the proposed improvements. Temporary parking during construction would likely be onsite or along Miloli‘i Road. During construction, the construction contractor would be required to provide for boat turn-around and ensure access to the residential property in the back of the park.

The proposed project includes a parking area with 12 standard parking spaces and four handicapped spaces (including 1 van space), in addition to a paved area for boat turnaround. The project also includes installation of vehicular barriers to prevent unauthorized vehicles from accessing the shoreline and the pavilion. These barriers would not prevent access to the existing residence.

There would be no direct increase in operational traffic due to implementation of the proposed project, and no long-term adverse effects to circulation and parking would occur.

3.12 CONFORMANCE WITH STATE AND LOCAL PLANS, POLICIES, AND LAND USE CONTROLS

State and County policy, and land use and community plans and controls are established to address the long-term physical, social, economic, and environmental needs in Hawai'i. Pertinent land use controls for the Miloli'i Beach Park Accessibility Improvement project are described below.

State of Hawai'i

State of Hawai'i, Land Use Commission – State Land Use Districts
HRS, Chapter 205, establishes four major land use districts in which all lands in the State are placed. These districts include: urban, rural, agricultural, and conservation. The Conservation District has five subzones: Protective, Limited, Resource, General, and Special. Excluding the Special subzone, the four subzones are arranged in a hierarchy of environmental sensitivity, ranging from the most environmentally sensitive (Protective) to the least sensitive (General). These subzones define a set of identified land uses that may be allowed by discretionary permit as regulated by HAR, Chapter 13-5, "Conservation District" and HRS, Chapter 183C. The project site is located within the "Conservation" (C) District with a subzone designation of "Special" (see Figure 6). The objective of the special subzone is to provide for sustainable use of areas possessing unique developmental qualities that complement the natural resources of the area (HAR, Section 13-5-15). The project site is located in the Miloli'i-Hoopuloa special subzone (Chapter 13-5, Exhibit 2, Special Subzones (5)). The purposes of this subzone designation include fishing activities, residential, educational, and cultural and recreational uses pursuant to Act 86, SLH 1991.

The proposed project would not expand the park or its facilities beyond what currently exists. Besides the demolition and relocation of the restrooms, pavilion, and water storage structures, most of the proposed improvements involves minor alterations or cosmetic work to existing structures. Based on consultation with DLNR, Office of Conservation and Coastal Lands (OCCL), the proposed project is an identified land use pursuant to HAR, Section 13-5-22 P-8 Structures and Land Uses, Existing (B-1):

> *Demolition, removal, or minor alteration of existing structures, facilities, land, and equipment. Any historic property shall be evaluated by the department for historical significance.*

As noted by OCCL, construction of the proposed accessibility improvements would require filing a Site Plan Approval application, including proof of SHPD consultation (see Appendix A). The SHPD completed Chapter 6E-8 Historic Preservation Review for the project and transmitted their determination to the Department of Parks and Recreation in an email dated July 25, 2022. The SHPD determined that the AIS report prepared for the project satisfied the requirements of HAR Section 13-276-5, and accepted the conclusions found therein. (See Appendix B for the SHPD letter and a copy of the AIS.)

Background Information on Land Use Controls in the Miloli‘i Area

Miloli‘i has been established as a settlement dating back to the early Polynesian seafarers from the South Pacific. In 1931, the territorial governor set aside the area as a public park under the control of the County government (Executive Order (EO) 473). With EO 473, the governor gave the County full authority to create a "Hawaiian Village" at Miloli‘i (Pa‘a Pono Miloli‘i 2017). In 1982, the state legislature approved Act 62 which authorized DLNR to, "negotiate and enter into long-term residential leases," with residents living at Miloli‘i and others who were displaced by the 1926 lava flow. Act 83, passed in 1984, granted a time extension to Act 62. On June 22, 1984, the Board of Land and Natural Resources approved the establishment of the Miloli‘i-Ho‘opūloa Special Subzone within Conservation District lands under Conservation District Use Permit (CDUP) HA-1653, dated January 12, 1984. The Miloli‘i-Ho‘opūloa Community Development Plan Master Plan was created by *Pa‘a Pono Miloli‘i* and approved by the Land Board in 1984. The Master Plan included two phases of residential development in addition to areas for cultural, recreational, or educational purposes, located north of the Miloli‘i Beach Park. In line with the Master Plan's vision, the Final Environmental Assessment and Finding of No Significant Impact for the Miloli‘i Community Enrichment and Historical Center was issued by the County of Hawai‘i Planning Department in July 2012 for the development of a multi-purpose community center within the Miloli‘i Village (Farber & Associates 2012).

Separate from these actions, the Miloli‘i Beach Park was created by Executive Order 2435 and has been under the management of the County of Hawai‘i since 1985 (see OCCL consultation letter, Appendix A).

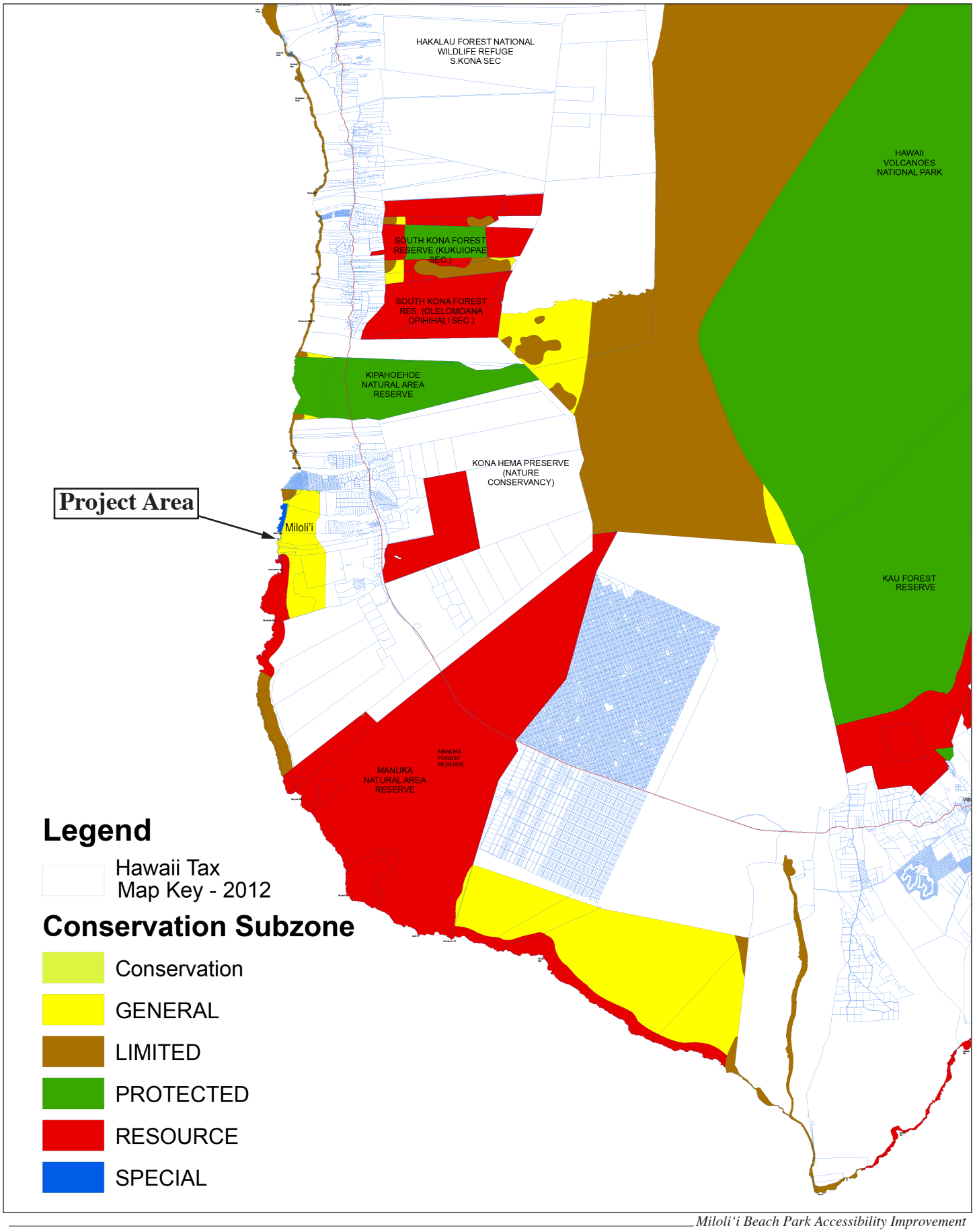

Miloli'i Beach Park Accessibility Improvement

SOURCE: State of Hawai'i Department of Land and Natural Resources, Office of Conservation and Coastal Lands, 2012

Figure 6

State Land Use District Map
Conservation District, Special Subzone

Hawaii State Planning Act, HRS Chapter 226

The Hawaii State Planning Act (HRS Chapter 226) is a broad policy document that forms a basis for all activities, programs, and decisions made by local and state agencies. The Act sets forth the Hawaii State Plan, which is a long-range comprehensive plan that identifies the goals, objectives, policies, and priorities for the state, and provides a basis for determining priorities and allocating limited resources. The objectives and policies focus on general topic areas, including population, economy, physical environment, facility systems, and socio-cultural advancement. The proposed accessibility improvements project is compatible with applicable objectives and policies, and priority guidelines listed in HRS Chapter 226, as discussed below.

Hawaii State Planning Act, HRS Chapter 226		
Objective or Policy	**Consistency**	**Discussion**
§226-11(a). Planning for the State's physical environment with regard to land-based, shoreline, and marine resources shall be directed towards achievement of the following objectives: (1) Prudent use of Hawaii's land-based, shoreline, and marine resources. (2) Effective protection of Hawaii's unique and fragile environmental resources. §226-11(b). To achieve the land-based, shoreline, and marine resources objectives, it shall be the policy of this State to: (1) Exercise an overall conservation ethic in the use of Hawaii's natural resources. (4) Manage natural resources and environs to encourage their beneficial and multiple use without generating costly or irreparable environmental damage. (6) Encourage the protection of rare or endangered plant and animal species and habitats native to Hawaii. (8) Pursue compatible relationships among activities, facilities, and natural resources. (9) Promote increased accessibility and prudent use of inland and shoreline areas for public recreational, educational, and scientific purposes.	Yes	The proposed Miloli'i Beach Park Accessibility Improvement project would reconstruct existing recreation facilities and provide ADA accessible walkways and parking. The proposed project BMPs and mitigation measures would minimize impacts to shoreline and marine resources.
§226-12(b). To achieve the scenic, natural beauty, and historic resources objective, it shall be the policy of this State to: (1) Promote the preservation and restoration of significant natural and historic resources.	Yes	As set forth in Section 3.5, *Historic, Archaeological, and Cultural Resources*, an Archaeological Inventory Survey was completed for the project site. The archaeological inventory survey identified three historic single feature sites. The mapping, written description, and photography of these sites adequately document them and no further work or preservation is required.

Hawaii State Planning Act, HRS Chapter 226		
Objective or Policy	**Consistency**	**Discussion**
§226-13(a). Planning for the State's physical environment with regard to land, air, and water quality shall be directed towards achievement of the following objectives: (1) Maintenance and pursuit of improved quality in Hawaii's land, air, and water resources. (2) Greater public awareness and appreciation of Hawaii's environmental resources.	Yes	As set forth in Section 5, *Findings and Determinations*, of this EA, no significant adverse effects to air quality or water quality would occur with implementation of the proposed accessibility improvements project.
(b) To achieve the land, air, and water quality objectives, it shall be the policy of this State to: (2) Promote the proper management of Hawaii's land and water resources. (3) Promote effective measures to achieve desired quality in Hawaii's surface, ground, and coastal waters. (5) Reduce the threat to life and property from erosion, flooding, tsunamis, hurricanes, earthquakes, volcanic eruptions, and other natural or man-induced hazards and disasters.	Yes	As described in Section 3.3, *Natural Hazards*, of this EA, the entire shoreline is subject to inundation due to high seas and swells caused by hurricanes and distant storms and tsunami activity. While most of the facilities are not located within the flood zone, the proposed improvements would be designed and constructed in conformance with the standards and requirements of the Hawai'i County Code, Chapter 27, *Floodplain Management*, as applicable. In addition, the project includes BMPs to be implemented during project construction to minimize erosion and potential impacts to water quality.
§226-23 (a). Planning for the State's socio-cultural advancement with regard to leisure shall be directed towards the achievement of the objective of the adequate provision of resources to accommodate diverse cultural, artistic, and recreational needs for present and future generations. (b) To achieve the leisure objective, it shall be the policy of this State to: (3) Enhance the enjoyment of recreational experiences through safety and security measures, educational opportunities, and improved facility design and maintenance. (5) Ensure opportunities for everyone to use and enjoy Hawaii's recreational resources. (6) Assure the availability of sufficient resources to provide for future cultural, artistic, and recreational needs. (10) Assure adequate access to significant natural and cultural resources in public ownership.	Yes	The proposed project includes accessibility improvements to meet ADA requirements and provide equitable access to the beach park amenities.

Coastal Zone Management Program

In October 1972, Congress passed the Coastal Zone Management Act for the purpose of establishing a national program for the management, beneficial use, protection, and development of land and water resources of the coastal areas of the United States. The Hawai'i Coastal Zone Management (CZM) Program (HRS, Chapter 205A) was promulgated in 1977 in response to the Federal Coastal Zone Management Act of 1972. The objectives and policies of the CZM Program are to provide recreational resources; protect historic, scenic, and coastal ecosystem resources; provide economic uses; reduce coastal hazards; and manage development in the coastal zone. All lands in the state of Hawai'i are located within the coastal zone management area.

Special Management Area Designation and Shoreline Setback Rules

The CZM Program outlines controls and policies within an area along the shoreline called the Special Management Area (SMA). The objectives of the SMA are "the maintenance, restoration, and enhancement of the overall quality of the coastal zone environment, including, but not limited to, its amenities and aesthetic values, and to provide adequate public access to publicly owned or used beaches, recreation areas and national reserves." The purpose of the SMA Permit is to regulate any use, activity or operation that qualifies as a "development" and is administered at the County level – the permit is a management tool to ensure activities within the SMA are carried out in compliance with the CZM objectives and policies, and SMA guidelines.

The project site is located within the SMA boundary (see Figure 7). Consultation with the County of Hawai'i Planning Department was initiated at the time of early consultation and EA preparation. It is anticipated that an SMA Major permit would be necessary, based on the project valuation and preliminary understanding of the project scope.

The proposed action requires compliance with the Shoreline Setback Rules of the County of Hawai'i Planning Department (Planning Department Rule 11-5). The shoreline at the project site generally follows the edge of the seawall or the high wash of waves at the beach area (a Shoreline Certification application was approved October 31, 2019, see Appendix C). The Shoreline Setback area is the area between the shoreline and the shoreline setback line established by the County. Structures or portions of a structure are not permitted in the shoreline setback area without a variance, and conditions must be imposed to maintain safe lateral access to and along the shoreline or adequately compensate for its loss; to minimize risk of adverse impacts on beach processes, to minimize risk of structures failing and becoming loose rocks or rubble on public property; and to minimize adverse impacts on public views to, from, and along the shoreline. The replacement pavilion would be approximately 22 feet set back from the existing sea wall, and the end of the new path at the BBQ area is approximately 20 feet from the shoreline. A portion of the concrete walkway to the campground and additional paving would be located within the shoreline setback area (see Figure 8). A Shoreline Setback Variance would be required for activities in the shoreline setback area.

The following discussion evaluates the consistency of the proposed Miloli'i Beach Park Accessibility Improvement project with the applicable objectives and policies of Chapter 205A, HRS. The policies of Chapter 205A, HRS, the consistency of the proposed accessibility improvements with those policies, and the reasoning for the conclusion are set forth in the table below.

Policy compliance is often a matter of interpretation. The County Council is the ultimate arbiter of public policy for the project, and their judgment regarding the project and a specific policy may be different from that set forth in this report. Therefore, the following policy evaluation should be viewed as preliminary, with the ultimate decision to be made by the appropriate appointed and elected officials.

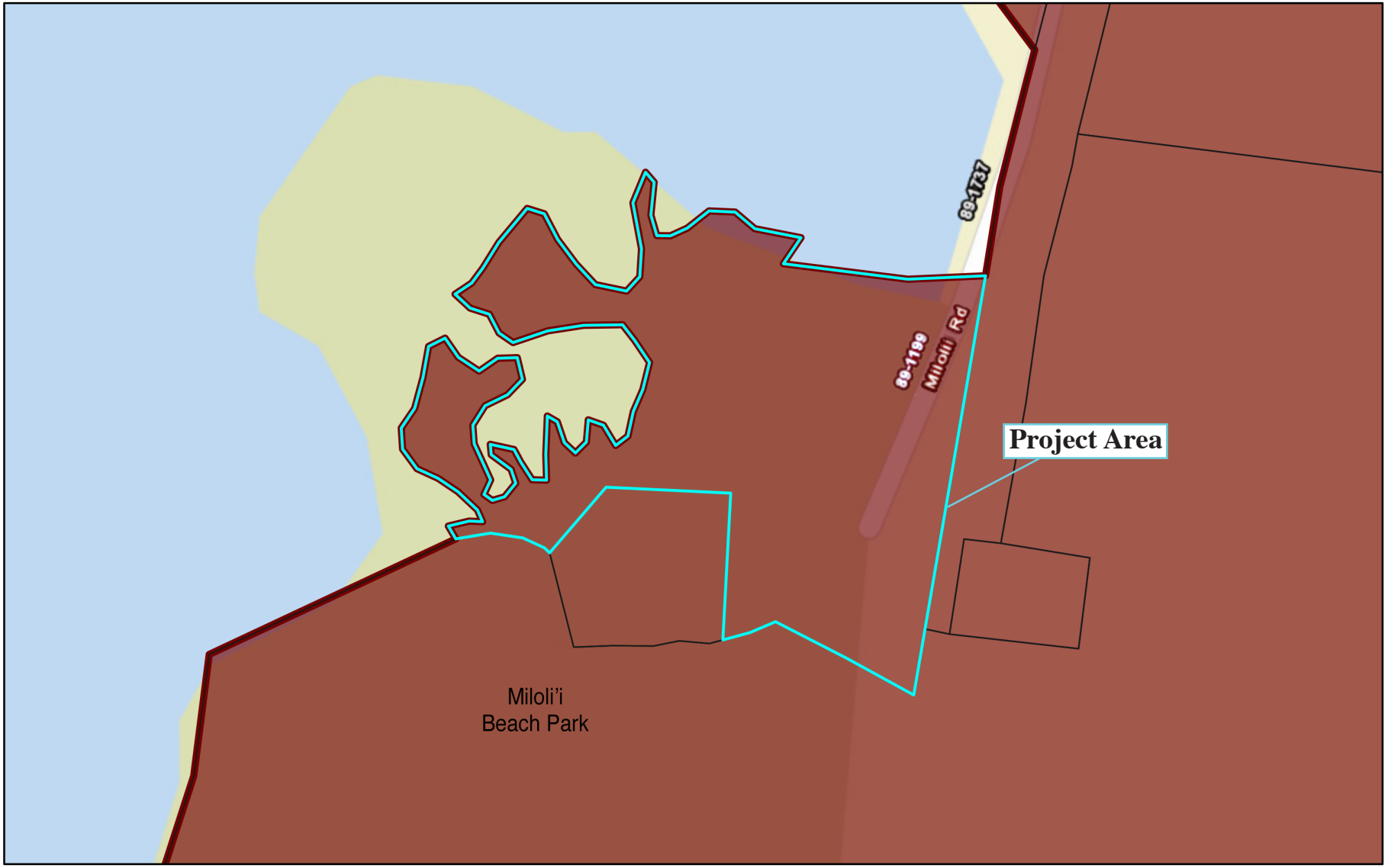

September 2, 2019

Special Management Area (SMA)

1:1,128

0 0.01 0.01 0.03 mi

0 0.01 0.03 0.05 km

Esri, HERE, Garmin, NGA, USGS, Esri, HERE, iPC

SOURCE: State of Hawai'i, SMA Locater Online Map, 2019

Miloli'i Beach Park Accessibility Improvement

Figure 7

Special Management Area Map

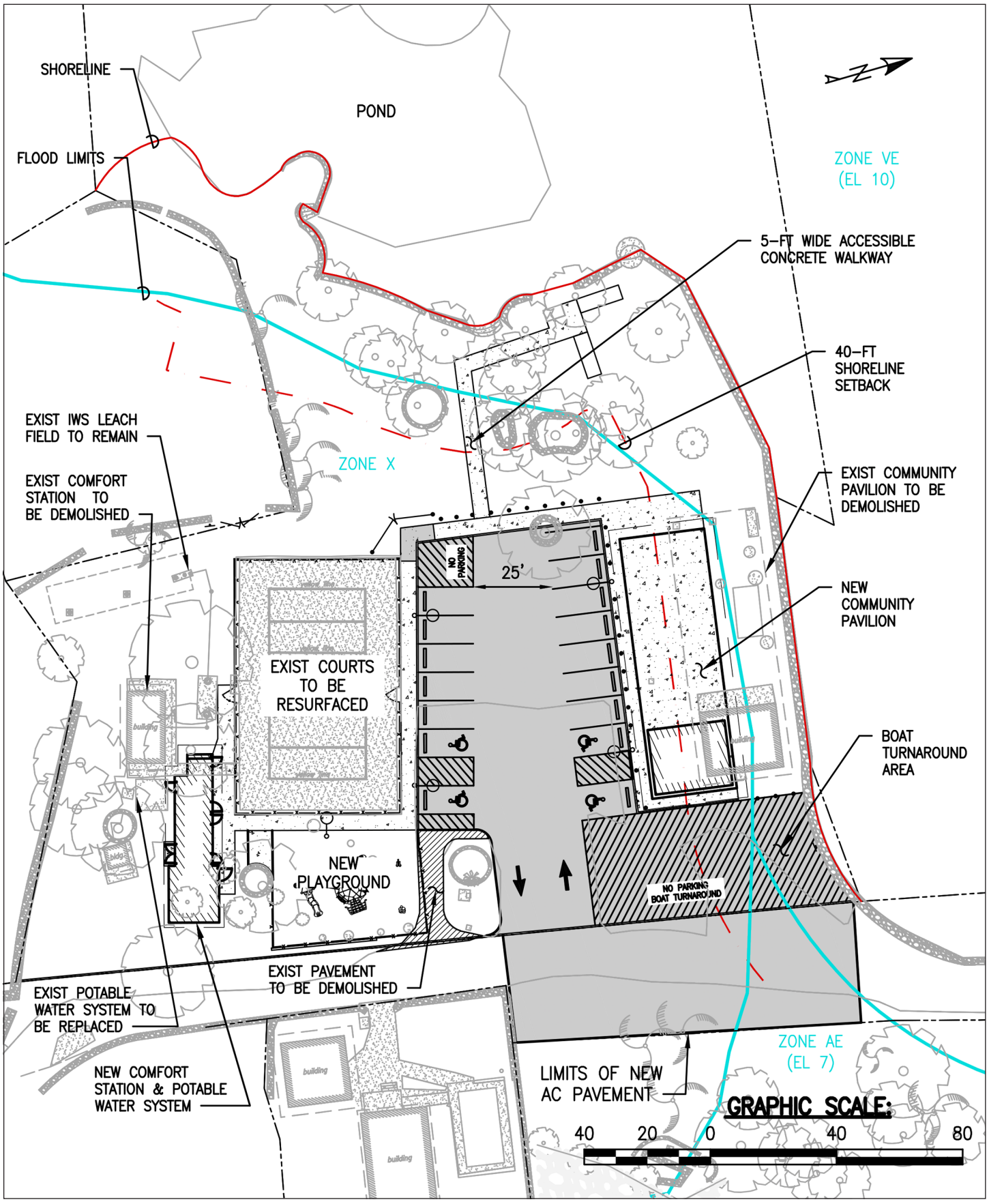

Miloli'i Beach Park Accessibility Improvement

SOURCE: Bow Engineering & Development, Inc. 2022

Figure 8

Shoreline Setback Area

HRS Chapter 205A-2, Objective or Policy	Consistency	Discussion
(1) Recreational resources; (A) Provide coastal recreational opportunities accessible to the public. Policy: (B) Provide adequate, accessible, and diverse recreational opportunities in the coastal zone management area by: (iii) Providing and managing adequate public access, consistent with conservation of natural resources, to and along shorelines with recreational value; (iv) Providing an adequate supply of shoreline parks and other recreational facilities suitable for public recreation; (v) Ensuring public recreational uses of county, state, and federally owned or controlled shoreline lands and waters having recreational value consistent with public safety standards and conservation of natural resources;	Yes	The Miloli'i Beach Park is an important recreational facility for residents in the area. The proposed project would have a beneficial impact to park and recreation resources since it would provide accessibility improvements that would broaden equitable public access to the beach park facilities.
(2) Historic resources; (A) Protect, preserve, and, where desirable, restore those natural and manmade historic and prehistoric resources in the coastal zone management area that are significant in Hawaiian and American history and culture. Policy: (A) Identify and analyze significant archaeological resources; (B) Maximize information retention through preservation of remains and artifacts or salvage operations; and (C) Support state goals for protection, restoration, interpretation, and display of historic resources.	Yes	As set forth in Section 3.5, *Historic, Archaeological, and Cultural Resources*, an Archaeological Inventory Survey was completed for the project site. The archaeological inventory survey identified three historic single feature sites. The mapping, written description, and photography of these sites adequately document them and no further work or preservation is required.
(3) Scenic and open space resources; (A) Protect, preserve, and, where desirable, restore or improve the quality of coastal scenic and open space resources. Policy: (B) Ensure that new developments are compatible with their visual environment by designing and locating such developments to minimize the alteration of natural landforms and existing public views to and along the shoreline. (C) Preserve, maintain, and, where desirable, improve and restore shoreline open space and scenic resources.	Yes	As set forth in Section 3.8, *Visual Resources*, the proposed project includes the reconstruction of existing facilities in addition to accessibility improvements. The proposed project would not significantly change the scenic and visual character of the surrounding area.
(4) Coastal ecosystems; (A) Protect valuable coastal ecosystems, including reefs, from disruption and minimize adverse impacts on all coastal ecosystems.	Yes	Adverse effects to water quality and the coastal ecosystem would be minimized by site-specific BMPs (see Section 3.2 above).

HRS Chapter 205A-2, Objective or Policy	Consistency	Discussion
Policy: (A) Exercise an overall conservation ethic, and practice stewardship in the protection, use, and development of marine and coastal resources; (E) Promote water quantity and quality planning and management practices that reflect the tolerance of fresh water and marine ecosystems and maintain and enhance water quality through the development and implementation of point and nonpoint source water pollution control measures.		
(5) Economic uses; (A) Provide public or private facilities and improvements important to the State's economy in suitable locations. Policy: (B) Ensure that coastal dependent development such as harbors and ports, and coastal related development such as visitor industry facilities and energy generating facilities, are located, designed, and constructed to minimize adverse social, visual, and environmental impacts in the coastal zone management area.	Yes	The Miloli'i Beach Park is an important public beach park for residents of the area. As evaluated in this EA, adverse environmental impacts from implementation of the proposed action would be minimized through project design and mitigation measures contained in this document.
(6) Coastal hazards; (A) Reduce hazard to life and property from tsunami, storm waves, stream flooding, erosion, subsidence, and pollution. Policy: (B) Control development in areas subject to storm wave, tsunami, flood, erosion, hurricane, wind, subsidence, and point and nonpoint source pollution hazards. (C) Ensure that developments comply with requirements of the Federal Flood Insurance Program.	Yes	As described in Section 3.3, *Natural Hazards*, of this EA, the entire shoreline is subject to inundation due to high seas and swells caused by hurricanes and distant storms and tsunami activity. The proposed improvements would be designed and constructed in conformance with the standards and requirements of the Hawai'i County Code, Chapter 27, *Floodplain Management*, as applicable. In addition, the project includes BMPs to be implemented during project construction to minimize erosion and potential impacts to water quality.
(7) Managing development; (A) Improve the development review process, communication, and public participation in the management of coastal resources and hazards.	Yes	Early consultation with agencies, organizations, and individuals was conducted during preparation of the Draft EA for the proposed project. Additional public review will occur during the public comment period for the EA, and during the public hearing before the County of Hawai'i Planning Commission during the SMA permit process.
(8) Public participation; (A) Stimulate public awareness, education, and participation in coastal management. Policy: (A) Promote public involvement in coastal zone management processes.	Yes	See above.

HRS Chapter 205A-2, Objective or Policy	Consistency	Discussion
(9) Beach protection; (A) Protect beaches for public use and recreation.	Yes	The proposed project includes reconstruction of park facilities and accessibility improvements at an existing beach park.
(10) Marine resources; (A) Promote the protection, use, and development of marine and coastal resources to assure their sustainability. Policy: (A) Ensure that the use and development of marine and coastal resources are ecologically and environmentally sound and economically beneficial.	Yes	As evaluated in this EA, adverse environmental impacts from implementation of the proposed action would be minimized through project design and mitigation measures contained in this document.

County Land Use Plans and Policies

County of Hawaii General Plan

The *County of Hawaii General Plan* (2005) is a long range, generalized planning policy document to guide development of the County. It serves as a basis for an implementation program to effectuate desired changes and improvements in the social, economic, and environmental atmosphere of the County. Topics addressed in the General Plan include goals and policies regarding population, land use, the environment, cultural resources, economic activity, housing and urban design, transportation, social infrastructure, and government. As set forth by the General Plan 2005: "Through the Zoning and Subdivision codes, and the Special Management Area and shoreline setback regulations, the County of Hawaii has the means to protect the island's natural and scenic beauty as an integral part of the living environment of the island." These land use regulations and how they apply to the proposed project are described throughout this section of the EA.

A Draft General Plan 2040 was released in August 2019, with public review and comment period through October 31st, 2019. This update of the General Plan incorporates emerging issues that were not addressed in the 2005 General Plan, such as climate change, healthy communities, integrated water resource management, renewable energy, food security, equitable housing and a place-based economy. Following completion of the public comment period, planners will incorporate comments and provide another public review period prior to moving the draft General Plan 2040 forward through the legislative process. The Windward and Leeward Planning Commission review hearings are expected to begin some time in spring of 2021, prior to final review and adoption by County Council. Since the County of Hawai'i has not yet adopted this document, the 2005 General Plan is the current adopted policy of the County.

The following discussion evaluates the consistency of the proposed project with applicable objectives and policies of the current General Plan.

Hawai'i County 2005 General Plan, Goals and Polices		
Goal or Policy	**Consistency**	**Discussion**
Flooding and Other Natural Hazards		
5.2 Goals (a) Protect human life. (b) Prevent damage to man-made improvements. (c) Control pollution. (d) Prevent damage from inundation. (e) Reduce surface water and sediment runoff. (f) Maximize soil and water conservation. 5.3 Policies (d) Any development within the Federal Emergency Management Agency designated flood plain must be in compliance with Chapter 27. (g) Development-generated runoff shall be disposed of in a manner acceptable to the Department of Public Works and in compliance with all State and Federal laws. (q) Consider natural hazards in all land use planning and permitting.	Yes	As described in Section 3.3, *Natural Hazards*, of this EA, the entire shoreline is subject to inundation due to high seas and swells caused by hurricanes and distant storms. The shoreline areas are also subject to tsunami activity. The proposed improvements would be designed and constructed in conformance with the standards and requirements of the Hawai'i County Code, Chapter 27, *Floodplain Management*, as applicable. The proposed action includes site-specific BMPs to be implemented during construction in order to prevent any wastewater, sediment, soil, and debris resulting from the proposed construction from adversely impacting the coastal ecosystem. Compliance with BMPs for construction would minimize impacts to water quality. Further, all earthwork grading operations would be conducted in compliance with dust and erosion control requirements of Hawaii County Code Chapter 10, *Erosion and Sedimentation Control.*
Historic Sites		
6.2 Goals (a) Protect, restore, and enhance the sites, buildings, and objects of significant historical and cultural importance to Hawaii. 6.3 Policies (c) Require both public and private developers of land to provide historical and archaeological surveys and cultural assessments, where appropriate, prior to the clearing or development of land when there are indications that the land under consideration has historical significance.	Yes	As set forth in Section 3.5, *Historic, Archaeological, and Cultural Resources*, an Archaeological Inventory Survey was completed for the project site. The archaeological inventory survey identified three historic single feature sites. The mapping, written description, and photography of these sites adequately document them and no further work or preservation is required.
Natural Beauty		
7.2 Goals (a) Protect, preserve and enhance the quality of areas endowed with natural beauty, including the quality of coastal scenic resources. h) Protect the views of areas endowed with natural beauty by carefully considering the effects of proposed construction during all land use reviews.	Yes	The Miloli'i area is identified as a "Natural Beauty Site" in the District of South Kona (General Plan 2005 Table 7-12). The proposed project would reconstruct existing recreation facilities and provide ADA accessible walkways and parking. There would be no permanent changes to the natural beauty or views of the area with project implementation.

Hawai'i County 2005 General Plan, Goals and Polices		
Goal or Policy	**Consistency**	**Discussion**
Natural Resources and Shoreline		
8.2 Goals (e) Protect and effectively manage Hawaii's open space, watersheds, shoreline, and natural areas. (f) Ensure that alterations to existing land forms, vegetation, and construction of structures cause minimum adverse effect to water resources, and scenic and recreational amenities and minimum danger of floods, landslides, erosion, siltation, or failure in the event of an earthquake. 8.3 Policies (c) Maintain the shoreline for recreational, cultural, educational, and/or scientific uses in a manner that is protective of resources and is of the maximum benefit to the general public. (r) Ensure public access is provided to the shoreline, public trails and hunting areas, including free public parking where appropriate.	Yes	The proposed project includes reconstruction of park facilities and accessibility improvements at an existing beach park. The proposed project accessibility improvements would broaden equitable public access to the beach park facilities and shoreline.
Recreation		
12.2 Goals (b) Maintain the natural beauty of recreation areas. 12.3 Policies (b) Improve existing public facilities for optimum usage. (h) Provide facilities and a broad recreational program for all age groups, with special considerations for the handicapped, the elderly, and young children.	Yes	See above.

County of Hawai'i Zoning Designation

The County of Hawai'i land use ordinance, or zoning code (Hawai'i County Code Chapter 25), regulates land use and overall future development on Hawai'i Island within the framework of the Hawai'i General Plan (Hawai'i County Code, Section 25-1-2(a)). The Miloli'i Beach Park site is zoned Open District. The purpose of the Open District is to buffer and preserve open land types of use, such as a beach park, which may be characterized by scenic beauty. Public parks are a permitted use in the Open District (Hawai'i County Code, Section 25-5-161(a)(11)). No feature of the proposed accessibility improvements project would conflict with existing zoning.

Kona Community Development Plan

Community Development Plans (CDPs) translate broad goals, policies and standards from the Hawai'i County General Plan into implementation actions as they apply to specific geographical regions around Hawai'i Island. The CDPs serve as the forum for community input into establishing County policy at the regional level and coordinating the delivery of County services to the community. The CDPs direct physical development and public improvements and may contain detailed land use and zoning guide maps, plans for roadways, parks, other infrastructure and public facilities, planning for watersheds and natural resources, and any other land use matters relating to the planning area (Hawai'i County Planning Department 2019). The Kona CDP covers the

geographic districts of North Kona, reaching nearly to Waikoloa Village, and South Kona, including the Community of Miloli‘i.

The Kona CDP sets forth a standard of excellence in design, operation, and maintenance, and specifically prioritizes upgrading and maintenance of Miloli‘i Beach Park:

> Policy PUB–7.2: Excellence in Maintenance. If the community and responsible public workers cannot stand next to the public facility with pride, then that is a call to action for both the community and the responsible public agency.
>
> Action PUB–7.2c: Provide for upgrading and maintenance to the public facilities in critical need of attention:
>
> ii. Maintain parks and public facilities in remote areas, such as Miloli‘i.

The proposed project would replace the existing pavilion to meet permitting standards and provide accessibility improvements to the park, among other improvements. These upgrades are essential to meet ADA requirements and provide equitable access to the park amenities.

4 ALTERNATIVES TO THE PROPOSED ACTION

This chapter considers alternatives to the proposed action, including the No Action Alternative.

4.1 PROPOSED ALTERNATIVES

No Action Alternative

The No Action Alternative identifies the expected environmental impacts in the future if existing conditions were left as is with no action taken by the approving agency. Under the No Action Alternative, the proposed accessibility improvements would not be constructed and existing park features would not be reconstructed. As a result, the present conditions within the project area would predominantly continue into the future, with some members of the community experiencing limited or difficult access to park facilities. Also, the basketball court and pavilion would remain in disrepair and would not meet County permit requirements. This alternative would not meet any of the identified project objectives.

Preferred Alternative 1: Proposed Action

Under this alternative, the restoration improvements described in Section 2.2 would be implemented as the Proposed Project. The beneficial impacts of the proposed project include the increased accessibility to the park offered by improved parking lot including ADA spaces, connecting ADA accessible walks and ramps to park facilities for greater accibility from feature to feature, improvement and replacement of existing facilities to meet ADA guidelines and County permit requirements, and the addition of a new children's play apparatus.

Alternative 2: Alternate Comfort Station Location

Alternative 2 would include a new comfort station and new potable water system sited closer to the camp sites (see Figure 9). The new comfort station location would require the installation of new septic tank(s) and associated sewer piping, though the existing leach field would be reused. The septic tank and sewer piping would be designed in accordance with the State Department of Health requirements. Under the proposed Alternative 2, the new potable water system and replacement pavilion would be located within the Shoreline Setback Area, and the pavilion would remain in the flood zone. This alternative was eliminated based on community feedback that the comfort station location closer to the campsites is not desired, and the original location is preferred.

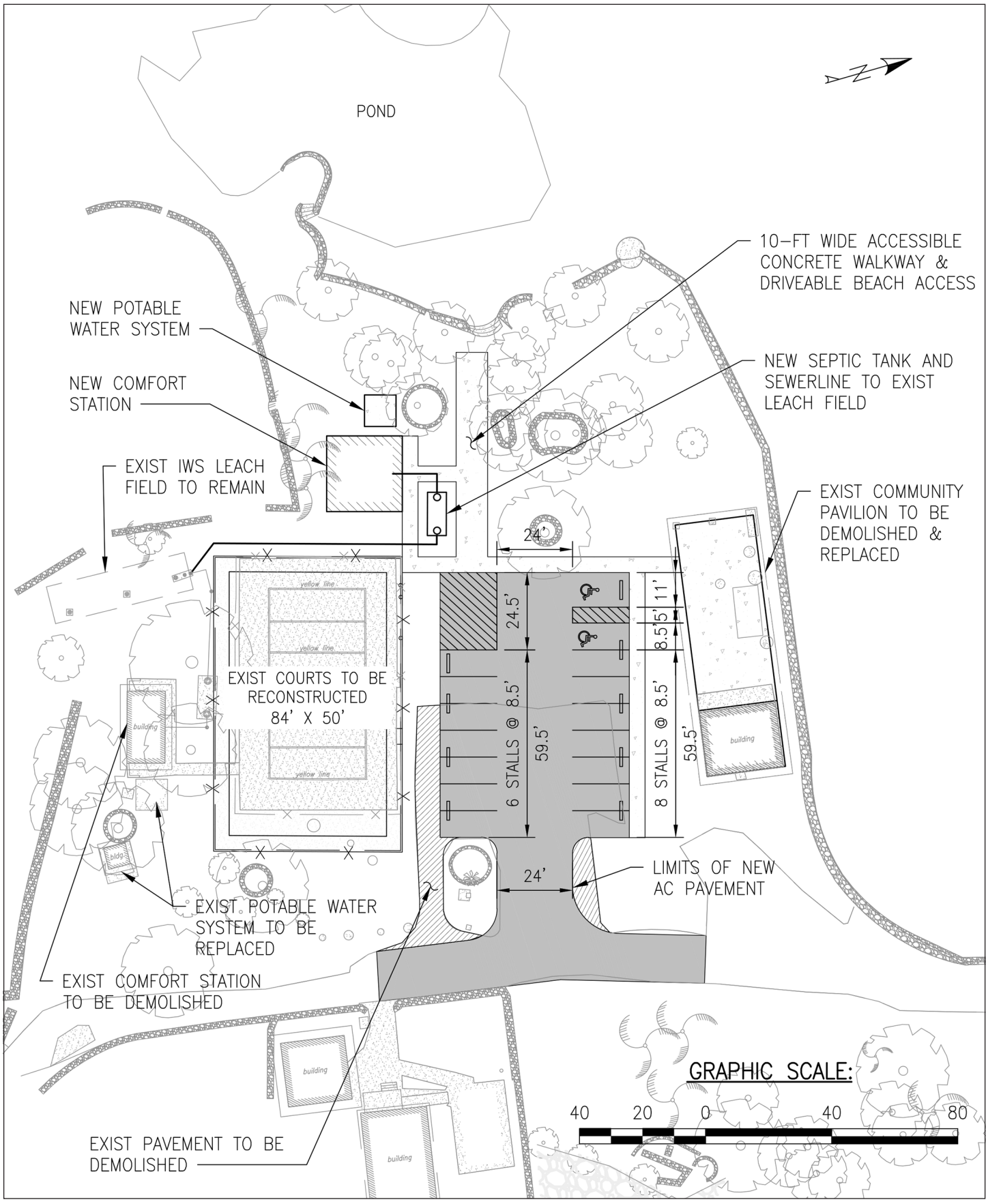

Miloli'i Beach Park Accessibility Improvement

SOURCE: Bow Engineering & Development, Inc. 2019

Figure 9

Alternative 2 Conceptual Site Plan

5 FINDINGS AND DETERMINATION

As set forth in HAR, Section 11-200.1-13, in considering the significance of potential environmental effects, an agency must "consider every phase of a proposed action, the expected impacts, and the proposed mitigation measures." The proposed action is not expected to have a significant effect on the environment. The recommended preliminary determination for the Miloli'i Beach Park Accessibility Improvement is a Finding of No Significant Impact (FONSI). The findings supporting this determination are discussed below.

(1) Does the project irrevocably commit a natural, cultural, or historic resource?

The effects of multiple tsunamis and the historic impacts to the property by the construction and use of the school suggests that no pre-contact archaeological sites or features are likely to be encountered. While there is low probability of encountering archaeological sites in this area, in the event that historic resources, including human skeletal remains, are identified during the construction activities, all work would cease in the immediate vicinity of the find, the find would be protected from additional disturbance, and the State Historic Preservation Division would be contacted immediately. The proposed project is not anticipated to involve an irrevocable commitment, or loss and destruction of any natural or cultural resource.

(2) Does the project curtail the range of beneficial uses of the environment?

The proposed improvements would not curtail the range of beneficial uses at the project site. The project would increase the range of beneficial uses of the environment by improving existing beach park facilities and accessibility to these recreational resources. With implementation of accessibility improvements, recreational access for disabled visitors to the park would be improved.

(3) Does the project conflict with the State's environmental policies or long-term environmental goals established by the law?

The proposed project is consistent with the environmental policies and long-term environmental goals established in HRS, Chapter 344. The guiding policies as set forth in HRS, Chapter 344-3, include:

(1) Conserve the natural resources, so that land, water, mineral, visual, air and other natural resources are protected by controlling pollution, by preserving or augmenting natural resources, and by safeguarding the State's unique natural environmental characteristics in a manner which will foster and promote the general welfare, create and maintain conditions under which humanity and nature can exist in productive harmony, and fulfill the social, economic, and other requirements of the people of Hawaii.

(2) Enhance the quality of life by:

(A) Setting population limits so that the interaction between the natural and artificial environments and the population is mutually beneficial;

(B) Creating opportunities for the residents of Hawaii to improve their quality of life through diverse economic activities which are stable and in balance with the physical and social environments;

(C) Establishing communities which provide a sense of identity, wise use of land, efficient transportation, and aesthetic and social satisfaction in harmony with the natural environment which is uniquely Hawaiian; and
(D) Establishing a commitment on the part of each person to protect and enhance Hawaii's environment and reduce the drain on nonrenewable resources.

The proposed project would both conserve and enhance the natural resources of the park, and enhance the recreational experience for both visitors and the local populace.

(4) Does the project have a substantial adverse effect on the economic welfare, social welfare, or cultural practices of the community and State?

The proposed action would have a short-term positive effect on the economic welfare of the island resulting from hiring construction workers. This project is not expected to significantly affect traditional native Hawaiian cultural practices or other traditional cultural practices occurring in the surrounding area. The proposed action would not have a substantial long-term effect on the economic and social welfare of the community or the state. The proposed project is in accordance with land use plans and regulations as set forth in Section 3.12, *Conformance with State and County plans, Policies, and Land Use Controls.*

(5) Does the project have a substantial adverse effect on public health?

The project would not substantially affect public health as discussed in various sections of this document. Construction activities may temporarily increase fugitive dust and noise levels in the project vicinity. Short-term construction-related effects would be minimized by complying with pertinent State or City regulations and conditions of permits required. Further, these impacts would cease upon completion of construction. The proposed improvements would repair facilities in a current state of disrepair, and therefore protect the health and safety of the public. No long-term negative impact on public health is anticipated with implementation of the proposed action.

(6) Does the project involve adverse secondary impacts, such as population changes or effects on public facilities?

The proposed action would not generate population or create secondary demands and impacts on public facilities and services. The project would not alter the present use of the park.

(7) Does the project involve a substantial degradation of environmental quality?

There would be no long-term, adverse environmental impacts associated with the proposed action. Construction activities may temporarily increase dust and noise in the project vicinity. However, these impacts would cease upon completion of construction. The proposed project will also include site-specific BMPs to minimize erosion and sedimentation effects to water quality. Additional mitigation measures included in Chapter 3 would minimize potential construction-related impacts.

(8) May the project be individually limited but cumulatively have substantial adverse effect upon the environment or involve a commitment for larger actions?

The proposed Miloli‘i Beach Park Accessibility Improvement project is limited to the existing park. In a regional context, the project would not have cumulatively significant impacts.

(9) Does the project have a substantial adverse effect on a rare, threatened, or endangered species, or its habitat?

With implementation of mitigation and BMPs described in Section 2.2 of this document, no substantial adverse effects would occur to rare, threatened, or endangered species, or their habitats.

(10) Does the project have a substantial adverse effect on air or water quality or ambient noise levels?

Construction activities would have a short-term effect on air quality, water quality, and ambient noise levels. Mitigation included in Chapter 3 would minimize these potential impacts. Construction activities would also be subject to applicable State and City regulations and permit conditions. No additional long-term impacts would occur.

(11) Does the project have a substantial adverse effect on or be likely to suffer damage by being located in an environmentally sensitive area such as a flood plain, tsunami zone, sea level rise exposure area, beach, erosion-prone area, geologically hazardous land, estuary, fresh water, or coastal waters?

Construction of the proposed park accessibility improvement project would not result in increased flooding or hazards from flooding in surrounding areas. The proposed pavilion location would be shifted south of the existing location and away from the shoreline. The new pavilion would be relocated outside of Flood Zone VE, a coastal flood zone. The proposed improvements would be designed and constructed in conformance with the standards and requirements of the Hawai‘i County Code, Chapter 27, *Floodplain Management*, as applicable.

(12) Would the project have a substantial adverse effect on scenic vistas and viewplanes, during day or night, identified in county or state plans or studies?

Since the proposed project consists of accessibility improvements and replacement of existing uses at the Miloli‘i Beach Park, the proposed project would not significantly change the scenic and visual character of the surrounding area. The proposed improvements would not obstruct views from any recognized view corridor or scenic roadway.

(13) Would the project require substantial energy consumption or emit substantial greenhouse gases?

There would be energy consumption associated with construction of the proposed project. The amount of energy that would be consumed with project implementation is not considered substantial.

This page intentionally
left blank.

6 INDIVIDUALS, COMMUNITY GROUPS, AND AGENCIES CONSULTED

6.1 EARLY CONSULTATION

Early consultation was conducted from July 2019 to December 2019, prior to preparation of the Draft EA for the proposed project. This is part of the scoping process for the Draft EA, and is intended to identify environmental issues and concerns to be addressed in the Draft EA. The following agencies, organizations, and individuals were sent a preliminary project description for comments or questions. Those that provided written comments (either by hard copy or electronically) are highlighted in italics. Copies of the written comments are included in Appendix A.

FEDERAL AGENCIES
U.S. Fish and Wildlife Service
Department of Army Corps of Engineers
Department of the Navy
Environmental Protection Agency
U.S. National Oceanic Atmospheric Administration, National Marine Fisheries Service

STATE AGENCIES
Department of Health, Environmental Health Administration
Department of Transportation
Department of Accounting and General Services
Office of Planning
University of Hawai‘i Environmental Center
University of Hawai‘i Water Resources Research Center
Office of Hawaiian Affairs
Department of Hawaiian Home Lands
Department of Land and Natural Resources
Department of Land and Natural Resources - Historic Preservation Division

COUNTY OF HAWAI‘I
Department of Environmental Management
Planning Department
Department of Public Works
Department of Water Supply

ELECTED OFFICIALS
County Council Representative – District 6

COMMUNITY
Pa‘a Pono Miloli‘i
Neighboring land owners

6.2 MILOLI'I COMMUNITY MEETINGS

The Department of Parks and Recreation also scheduled two community meetings at the park to better understand the needs and concerns regarding the proposed improvements. The meeting were held on October 18, 2019, and November 3, 2019 at the Hālau pavilion. Approximately 9 community members and 32 community members attended the meetings on October 18, 2019 and November 3, 2019, respectively, in addition to Department of Parks and Recreation staff.

Concerns and questions highlighted in the early consultation meeting included (though all topics discussed may not be listed):

- Some commentors wanted more parking, some wanted less
- Turn around area for truck/boat trailer, water truck, and school bus.
- Hibachi/Grill pits
- Area/security lighting, pole mounted, solar powered.
- Improvements to the comfort station – may need larger water tank capacity for shower
- Pavilion/Halau – concerns with existing solar/PV system
- Retain community events
- Access during construction
- Septic system and water quality
- Increase in tourist visitors?
- Cultural and historical resources being protected?

The majority sentiment regarding park improvements is to retain the park amenities and features that currently exist while minimizing the amount of changes and improvements to the park as possible. Concerns identified in the community meetings were considered during the site design process and resulted in some modifications to project plans.

Parks and Recreation representatives also attended a meeting with the Planning Department on November 7, 2019 regarding permitting and approval requirements for the proposed project.

An additional community meeting was held at the park on May 16, 2021, to follow-up on community concerns previously identified. Approximately 15-20 community members were in attendance. Following the Department of Parks and recreation staff presentation of project intent, the community discussion identified the following issues (though all topics discussed may not be listed):

- Halau Pavilion has sentimental value since its built by the community.
- Outdoor shower? After discussion it was determined that a shower is not needed due to limited water supply, run-off into ocean, possible homeless and squatters.
- Existing PV system is not working.
- Try to save as much of existing ironwood trees as possible, most trees are from original school site and trees also provide shade.
- Save existing pebble gravel at Halau and surrounding area, reuse/relocate.
- Place no parking sign(s) at proposed boat turn around area.
- Place no parking sign(s) at gate to residence (Chang's).
- Salvage existing Halau building materials for community use.
- During construction, local fishing community still needs access to boat turn around. If entire park facility will need to be closed, village community will need advance notice.

- New Halau Pavilion should have barricades to keep cars from parking under roof, short wall or similar.

During an informal site visit to the park on June 21, 2022, Department of Parks and Recreation staff discussed additional details with community members regarding the PV system requirements, a service window at the pavilion, and insulation in the pavilion storage area. Fire protection requirements were also discussed and will be incorporated into project design.

6.3 COMMENTS AND RESPONSES ON THE DRAFT ENVIRONMENTAL ASSESSMENT

Notification of the availability of the Draft EA was published in the August 8, 2020 *The Environmental Notice*. Due to concerns regarding adequate opportunities for public participation during COVID-19, the comment period for the project was extended, and notice of availability of the Draft EA was published in the subsequent issues of *The Environmental Notice*, including the September 8, 2020 issue, and the October 8, 2020 issue. During the 90-day public comment period ending November 9, 2020, agencies, organizations, and individuals were provided the opportunity to comment on the proposed project. Copies of the Draft EA were distributed to the following parties for review and comment, or notification of its availability was provided. Those that provided written comments (either by hard copy or electronically) are highlighted in italics. The comment letters are included in Appendix A of this document.

FEDERAL AGENCIES

U.S. Fish and Wildlife Service

Department of Army Corps of Engineers

STATE AGENCIES

Department of Health, Environmental Health Administration

Office of Planning

Department of Land and Natural Resources

Department of Land and Natural Resources - Historic Preservation Division

COUNTY OF KAUA'I

Department of Planning

Transportation Agency

ELECTED OFFICIALS

County Council Representative

COMMUNITY

Property owners across river and near crossing

Interested Parties

Waimea Public Library

The Garden Island Newspaper

These comments are included in Appendix A and the Table: Summary Comments and Responses in Appendix A.

6.4 ENVIRONMENTAL ASSESSMENT PREPARATION

This Draft Environmental Assessment (EA) was prepared for the County of Hawai'i Department of Parks and Recreation by Environmental Planning Partners, Inc. and Bow Engineering & Development, Inc. The following consultants were involved in the preparation of this document:

William F. Bow, Environmental Director, Bow Engineering & Development, Inc.

Emi Tanitomi, P.E., Project Manager, Bow Engineering & Development, Inc.

Robert D. Klousner, President, Principal in Charge, Environmental Planning Partners, Inc.

Raadha M. B. Jacobstein, Professional Planner, Environmental Planning Partners, Inc.

Mary Wilson, Editor, Environmental Planning Partners, Inc.

Dale Nutley, Graphic Artist, Environmental Planning Partners, Inc.

7 REFERENCES

CAB. See Hawai‘i, State of, Department of Health, Clean Air Branch.

DAR. See Hawai‘i, State of, Division of Aquatic Resources.

DBEDT. See Hawai‘i, State of, Department of Business, Economic Development & Tourism.

DLNR. See Department of Land and Natural Resources.

DOH. See Hawai‘i, State of, Department of Health.

DOH CWB. See Hawai‘i, State of, Department of Health, Clean Water Branch.

Federal Emergency Management Agency, 2019. Earthquake Hazard Maps. Last updated 01/14/2019. Accessed on July 31, 2019 at <https://www.fema.gov/earthquake/earthquake-hazard-maps>

Federal Emergency Management Agency, 2017. Flood Insurance Rate Map. Map Number 1551661691F. Map Revised September 29, 2017.

FEMA. See Federal Emergency Management Agency.

Farber & Associates, 2012. Final Environmental Assessment, Miloli‘i Community Enrichment and Historical Center, Miloli’i, Ho’ōpūloa, South Kona District, Island of Hawai‘i.

Fornander, A. 1885. An Account of the Polynesian Race, its Origins and Migrations, and the Ancient History of the Polynesian People to the Times of Kamehameha I. Vol. II. Trubner, London.

Giambelluca, T.W., Q. Chen, A.G. Frazier, J.P. Price, Y.-L. Chen, P.-S. Chu, J.K. Eischeid, and D.M. Delparte, 2013. Online Rainfall Atlas of Hawai‘i. *Bull. Amer. Meteor. Soc.* 94, 313-316, doi: 10.1175/BAMS-D-11-00228.1. Accessed on July 31, 2019 at < http://rainfall.geography.hawaii.edu/interactivemap.html >

Haun & Associates, 2022. Final Archaeological Inventory Survey: TMK: (3) 8-9-004:001. Miloli‘i Ahupua‘a, South Kona District, Island of Hawai‘i. Prepared by: Alan E. Haun, Ph.D. and Dave Henry, B.S. Prepared for: County of Hawai‘i, Department of Parks and Recreation. August 2022.

Hawai‘i Climate Change Mitigation and Adaptation Commission. 2017. Hawai‘i Sea Level Rise Vulnerability and Adaptation Report. Prepared by Tetra Tech, Inc. and the State of Hawai‘i Department of Land and Natural Resources, Office of Conservation and Coastal Lands, under the State of Hawai‘i Department of Land and Natural Resources Contract No: 64064.

Hawai‘i National Flood Insurance Program (HNFIP), 2019. Flood Hazard Assessment Tool. Accessed on July 31, 2019 at <http://gis.hawaiinfip.org/FHAT/>

Hawai‘i, County of, Planning Department, 2019. Planning Department Website information. Accessed on September 4, 2019 at < http://www.hiplanningdept.com>

Hawai‘i, County of, Planning Department, 2016. Hawai‘i County Code. 1983 (2016 Edition, as Amended). Accessed on September 4, 2019 at < http://www.hawaiicounty.gov/lb-countycode >

Hawai‘i, County of, 2008. Mapping Kona's Future: Kona Community Development Plan. September 2008 (As Amended). Accessed on April 27, 2020 at < https://www.hawaiicountycdp.info/north-and-south-kona-cdp/kona-cdp-document >

Hawai‘i, County of, 2005. County of Hawaii General Plan. February 2005 (as amended). Accessed on August 5, 2019 at < http://www.hiplanningdept.com/general-plan/2005-plan/>

Hawai‘i, State of, Department of Business, Economic Development & Tourism, 2019. Census. Accessed on August 5, 2019 at < http://census.hawaii.gov>

Hawai‘i, State of, Department of Health, Clean Air Branch (CAB), 2020. State of Hawai‘i Annual Summary 2020 Air Quality Data. December 2021. Accessed on August 5, 2022 at <http://health.hawaii.gov/cab/>

Hawai‘i, State of, Department of Health, 2014. Water Quality Standards Map of the Island of Hawai‘i. June 2014. Accessed on July 30, 2019 at <http://health.hawaii.gov/cwb/site-map/clean-water-branch-home-page/water-quality-standards/>

Hawai‘i, State of, Department of Health (DOH), Clean Water Branch (CWB), 2018. 2018 State of Hawai‘i Water Quality Monitoring and Assessment Report. July 11, 2018. Accessed on July 30, 2019 at < http://health.hawaii.gov/cwb/clean-water-branch-home-page/integrated-report-and-total-maximum-daily-loads/ >

Hawai‘i, State of, Commission on Water Resource Management, 2019. Hawai‘i Water Plan. Water Resource Protection Plan. 2019 Update. Accessed on July 30, 2019 at: < http://files.hawaii.gov/Department of Parks and Recreation/cwrm/planning/wrpp2019update/WRPP_DRAFT_ALL_201907.pdf>

Hawai‘i, State of, Department of Planning, 2013. Stormwater Impact Assessments: Connecting primary, secondary and cumulative impacts to Hawaii's Environmental Review process. May 2013. Accessed on September 4, 2019 at: < http://files.hawaii.gov/dbedt/op/czm/initiative/stomwater_imapct/final_stormwater_impact_assessments_guidance.pdf >

Hawai‘i, State of, Department of Planning, Department of Land and Natural Resources, 2012. State of Hawai‘i Conservation Subzone. November 2012. Accessed on September 2, 2019 at: < https://dlnr.hawaii.gov/occl/subzone-maps/ >

Hawai‘i, State of, Office of Planning (OP), 1977. Agricultural Lands of Importance to the State of Hawaii (ALISH). State Department of Agriculture, 1977. Map accessed on July 29, 2019 at: <http://planning.hawaii.gov/gis/various-maps/ >

Hawai‘i, State of, Office of Planning (OP), 2019. Special Management Area. Map accessed on September 2, 2019 at: <http://planning.hawaii.gov/gis/various-maps/ >

HNFIP. See Hawai‘i National Flood Insurance Program.

Intergovernmental Panel on Climate Change (IPCC), 2013. *Climate Change 2013: The Physical Science Basis. Contribution of Working Group I to the Fifth Assessment Report of the Intergovernmental Panel on Climate Change*. Stocker, T.F., D. Qin, G.-K. Plattner, M. Tignor, S.K. Allen, J. Boschung, A. Nauels, Y. Xia, V. Bex and P.M. Midgley (eds.)]. Cambridge University Press, Cambridge, United Kingdom and New York, NY, USA, 1535 pp. Accessed on July 31, 2019 at < http://www.ipcc.ch/report/ar5/wg1/>

IPCC, 2022. Climate Change 2022. Impacts, Adaptation and Vulnerability. Contribution of Working Group II to the Sixth Assessment Report of the Intergovernmental Panel on Climate Change [H.-O. Pörtner, D.C. Roberts, M. Tignor, E.S. Poloczanska, K. Mintenbeck, A. Alegría, M. Craig, S. Langsdorf, S. Löschke, V. Möller, A. Okem, B. Rama (eds.)]. Cambridge University Press. In Press. Accessed on March 23, 2022 at: < https://www.ipcc.ch/report/ar6/wg2/>

Maly, K. and O. Maly 2003. He Wahi Mo‘olelo No Na Lawai‘a Ma Kapalilua, Kona Hema, Hawai‘i: A Collection of Historical Accounts and Oral History Interviews with Elder Kama‘aina Fisher-people from the Kapalilua Region of South Kona, Island of Hawai‘i. Kumu Pono Associates, Hilo, HI.

NOAA. See United States National Oceanic and Atmospheric Administration.

NPS. See National Park Service.

NRCS. See U.S. Department of Agriculture, Natural Resources Conservation Service.

Office of Environmental Quality Control (OEQC), 1997. Guidelines for Assessing Cultural Impacts. Accessed on January 31, 2022 at: <http://oeqc2.doh.hawaii.gov/OEQC_Guidance/1997-Cultural-Impacts-Guidance.pdf>

Pa‘a Pono Miloli‘i, 2017. Accessed on July 30, 2019 at: <http://paaponomilolii.org>

United States, National Oceanic and Atmospheric Administration (NOAA), 2020. State of the Climate: Global Climate Report for Annual 2019. Published online January 2020. Accessed on February 18, 2020 at: < https://www.ncdc.noaa.gov/sotc/global/201913>

U.S. Department of Agriculture, Natural Resources Conservation Service, 2018. Custom Soil Resource Report for Island of Hawaii Area, Hawaii. Version 11, September 11, 2018. Accessed on July 29, 2019 at <http://websoilsurvey.nrcs.usda.gov/app/WebSoilSurvey.aspx>

U.S. Geological Survey (USGS), 2017. Volcano Hazards Program. Mauna Loa. Page modified 11/02/2017. Accessed on July 29, 2019 at: <https://volcanoes.usgs.gov/volcanoes/mauna_loa/>

USGS 2012. Mauna Loa—History, Hazards, and Risk of Living With the World's Largest Volcano. Accessed on July 29, 2019 at: <https://pubs.usgs.gov/fs/2012/3104/fs2012-3104.pdf>

USGS undated. Hawaii Technical Hazard Maps. Accessed on July 31, 2019 at: <https://pubs.usgs.gov/imap/i2761/sections/6_Hawaii.pdf>

USFWS 2019. National Wetlands Inventory, Surface Waters and Wetlands Mapper. Accessed on July 30, 2019 at: <https://www.fws.gov/wetlands/data/Mapper.html>

University of Hawai'i at Manoa, Sea Grant College Program, 2014. Climate Change Impacts in Hawai'i - A summary of climate change and its impacts to Hawai'i's ecosystems and communities. June 2014.

U.S. Climate Data 2019. Accessed on August 5, 2019 at: <usclimatedata.com>

APPENDIX A

CONSULTATION AND COMMENT LETTERS

APPENDIX A

EARLY CONSULTATION COMMENT LETTERS

DEPARTMENT OF THE ARMY
U.S. ARMY CORPS OF ENGINEER, HONOLULU DISTRICT
FORT SHAFTER, HAWAII 96858-5440

July 31, 2019

SUBJECT: U.S. Army Corps of Engineers Regulatory Program Information for Miloli'i Beach Park Improvement, South Kona, Island of Hawai'i; Corps Reference Number: POH-2019-00149

Mr. William Bow
Bow Engineering & Development, Inc.
1953 South Beretania Street, PH-A
Honolulu, Hawaii 96826

Dear Mr. Bow:

The Honolulu District, U.S. Army Corps of Engineers (Corps), Regulatory Office is in receipt of the County of Hawai'i, Department of Parks and Recreation's proposal to improve Miloli'i Beach Park buildings and amenities to comply with the Americans with Disabilities Act. The project is located in the coastal village of Miloli'i in the South Kona District on the Island of Hawai'i. You submitted a description of the preliminary project design and requested comments regarding permitting requirements. The Corps reference number for this project is POH-2019-00149; please include it in any future correspondence regarding this project.

We have reviewed your submittal pursuant to our authorities under Section 404 of the Clean Water Act (33 U.S.C. 1344; "Section 404") and Section 10 of the Rivers and Harbors Act of 1899 (33 U.S.C. 403; "Section 10"). Section 404 requires Department of the Army (DA) authorization for the discharge (placement) of dredged and/or fill material into waters of the U.S., including marine waters, streams, drainages, and wetlands. Under Section 404, our line of jurisdiction is the high tide line. Section 10 requires DA authorization for the placement of structures in, under or over navigable waters of the U.S. and/or other work affecting the course, location, condition or capacity of such waters. Under Section 10, our line of jurisdiction is the mean high water mark.

Based on the preliminary project description and associated figures, it is unclear whether the project would require a DA permit. It appears that a majority, if not all, of the work will occur in uplands, landward of our line of jurisdiction. There is a new 10-foot wide concrete walkway and vehicular beach access road proposed. If this will extend into the Pacific Ocean, or if work associated with it will occur within the water, then a DA permit will be required.

Please be aware that before the Corps can issue a permit, we need to ensure your project is compliant with the following federal laws.

1. Section 7 of the Endangered Species Act.
2. Magnuson-Stevens Fishery Conservation and Management Act, Essential Fish Habitat.
3. Section 106 of the National Historic Preservation Act.
4. Coastal Zone Management Act, Federal Consistency.
5. Section 401 of the Clean Water Act.

At the design stage, we strongly encourage project proponents to avoid all impacts to waters of the U.S. If you are not working within a water of the U.S., a DA permit from the Corps is not required. If you cannot avoid work in waters of the U.S., we ask that you minimize impacts to the greatest extent feasible. If you cannot design the project to avoid work in waters of the U.S. or if you do not know if the proposed work is in waters of the U.S., we recommend you submit a request for a jurisdictional determination on the project site. Information pertaining to our permitting program and the link to the Corps' jurisdictional determination request form can be found at:

https://www.poh.usace.army.mil/Missions/Regulatory/Permits.aspx

Thank you for your coordination with the Honolulu District Regulatory Program. If you have any questions regarding the permitting process or our regulatory program please contact me at Frank.J.Winter@usace.army.mil or (808) 835-4107.

Sincerely,

Frank Winter
Project Manager, Regulatory Branch

AUG 13 2019

OFFICE OF PLANNING
STATE OF HAWAII

DAVID Y. IGE
GOVERNOR

MARY ALICE EVANS
DIRECTOR
OFFICE OF PLANNING

235 South Beretania Street, 6th Floor, Honolulu, Hawaii 96813
Mailing Address: P.O. Box 2359, Honolulu, Hawaii 96804

Telephone: (808) 587-2846
Fax: (808) 587-2824
Web: http://planning.hawaii.gov/

DTS201908080842NA

August 9, 2019

Mr. William Bow
Bow Engineering & Development, Inc.
1953 South Beretania Street, PH-A
Honolulu, HI 96826

Dear Mr. Bow:

Subject: Milolii Beach Park Accessibility Improvement Project Scoping and Early Consultation, Milolii, South Kona, Hawaii; Tax Map Key: (3) 8-9-004: 001

The Office of Planning (OP) is in receipt of your early consultation request, received July 9, 2019, for the proposed Milolii Beach Accessibility Improvement Project, South Kona.

According to your early consultation request, the Department of Parks and Recreation, County of Hawaii, proposes to improve Milolii Beach Park buildings and amenities to comply with Americans with Disabilities Act (ADA) guidelines. The following actions are proposed by the subject project:

- Demolish the existing comfort station, and construct a new comfort station
- Demolish the existing pavilion, and construct a new pavilion
- Provide new portable water storage and booster pump station for new comfort station
- Improve parking lot to be ADA accessible
- Improve walkways to be ADA accessible
- Reconstruct basketball and volleyball courts

For use of state lands and state funds, and use of conservation district lands, an environmental assessment (EA) will be prepared pursuant to Hawaii Revised Statutes (HRS) Chapter 343.

The construction cost for completion of the proposed beach park improvements is estimated at $1.75 million. The project will be constructed in one phase.

The OP has reviewed your EA consultation request and has the following comments to offer:

1. The Hawaii State Planning Act, HRS Chapter 226, provides goals, objectives, policies, and priority guidelines for growth, development, and the allocation of resources throughout the state in areas of state interest. The EA should discuss the compatibility of the proposed action with the applicable objectives and policies, and priority guidelines listed in HRS Chapter 226.

2. The Hawaii Coastal Zone Management (CZM) Law, HRS Chapter 205A, requires all state and county agencies to enforce the CZM objectives and policies. The EA should include an assessment as to how the proposed project conforms to CZM objectives and supporting policies set forth in HRS § 205A-2, as amended. These objectives and policies include: recreational resources, historic resources, scenic and open space resources, coastal ecosystems, economic uses, coastal hazards, managing development, public participation, beach protection and marine resources.

3. The project site is located within the special management area (SMA) as designated by the County of Hawaii under HRS Chapter 205A. The OP recommends that the EA specifically discuss the compliance with the requirements of SMA use by consulting with the County of Hawaii Planning Department for the proposed project.

4. Sea level rise increases the risk of inundation, flooding, storm surges, and coastal erosion. The OP suggests that the subject EA refer to the findings of the Hawaii Sea Level Rise Vulnerability and Adaptation Report 2017, accepted by the Hawaii Climate Change Mitigation and Adaptation Commission. The Report, and Hawaii Sea Level Rise Viewer at http://climateadaptation.hawaii.gov/ particularly identifies 3.2-foot sea level rise exposure areas across the main Hawaiian Islands including Oahu, which is anticipated to occur in the mid to latter half of the 21st century. If applicable, the EA should consider specific mitigation measures including locations of new facilities to respond to the potential impacts of sea level rise on the proposed improvements and facilities.

5. OP's document entitled *Stormwater Impact Assessments* provides a framework for integrating stormwater impact assessment with Hawaii's environmental review process, and guidance on assessing stormwater impacts in the planning phase of project development. The OP suggests the EA consider all applicable information provided by this document and discuss site-specific mitigation measures to mitigate the potential impacts from the proposed accessibility improvement project on the surface waters and the coastal ecosystem.

   This document is available at
   http://files.hawaii.gov/dbedt/op/czm/initiative/stomwater_imapct/final_stormwater_impact_assessments_guidance.pdf

If you have any questions regarding this comment letter, please contact Shichao Li of our office at (808) 587-2841.

Sincerely,

Mary Alice Evans

Mary Alice Evans
Director

DAVID Y. IGE
GOVERNOR OF HAWAII

SUZANNE D. CASE
CHAIRPERSON
BOARD OF LAND AND NATURAL RESOURCES
COMMISSION ON WATER RESOURCE
MANAGEMENT

STATE OF HAWAII
DEPARTMENT OF LAND AND NATURAL RESOURCES
LAND DIVISION

POST OFFICE BOX 621
HONOLULU, HAWAII 96809

August 2, 2019

Bow Engineering & Development, Inc.
Attn: Mr. William Bow
1953 S. Beretania Street, PH-A
Honolulu, Hawaii 96826

via email: wbow@bowengineering.com

Dear Mr. Bow:

SUBJECT: Scoping and Early Consultation for the Proposed **Miloli'i Beach Park Accessibility Improvement Project** locate at Hoopuloa-Miloli'i, South Kona, Island of Hawaii; TMK: (3) 8-9-004:001 on behalf of the County of Hawaii, Department of Parks and Recreation

Thank you for the opportunity to review and comment on the subject matter. The Land Division of the Department of Land and Natural Resources (DLNR) distributed or made available a copy of your request pertaining to the subject matter to DLNR's Divisions for their review and comments.

At this time, enclosed are comments from the (a) Division of Boating & Ocean Recreation, (b) Engineering Division and (c) Land Division – Hawaii District on the subject matter. Should you have any questions, please feel free to contact Darlene Nakamura at (808) 587-0417 or email: darlene.k.nakamura@hawaii.gov. Thank you.

Sincerely,

Russell Y. Tsuji
Land Administrator

Enclosures
cc: Central Files

DAVID Y. IGE
GOVERNOR OF HAWAII

SUZANNE D. CASE
CHAIRPERSON
BOARD OF LAND AND NATURAL RESOURCES
COMMISSION ON WATER RESOURCE
MANAGEMENT

STATE OF HAWAII
DEPARTMENT OF LAND AND NATURAL RESOURCES
LAND DIVISION

POST OFFICE BOX 621
HONOLULU, HAWAII 96809

RECEIVED
LAND DIVISION
2019 JUL 19 AM 10:56
DEPT. OF LAND & NATURAL RESOURCES
STATE OF HAWAII

July 12, 2019

MEMORANDUM

TO: **DLNR Agencies:**
X Div. of Aquatic Resources
X Div. of Boating & Ocean Recreation
X Engineering Division
X Div. of Forestry & Wildlife
__Div. of State Parks
X Commission on Water Resource Management
X Office of Conservation & Coastal Lands
X Land Division – Hawaii District
X Historic Preservation

FROM: Russell Y. Tsuji, Land Administrator
SUBJECT: Scoping and Early Consultation for the Proposed **Miloli'i Beach Park Accessibility Improvement Project**
LOCATION: Hoopuloa-Miloli'i, South Kona, Island of Hawaii; TMK: (3) 8-9-004:001
APPLICANT: Bow Engineering & Development, Inc. on behalf of the County of Hawaii, Department of Parks and Recreation

Transmitted for your review and comment is information on the above-referenced subject matter. Please submit comments by **August 1, 2019.**

If no response is received by this date, we will assume your agency has no comments. If you have any questions about this request, please contact Darlene Nakamura at 587-0417 or by email at darlene.k.nakamura@hawaii.gov. Thank you.

(X) We have no objections.
( ) We have no comments.
( ) Comments are attached.

Signed: Rich Howard

Print Name: Richard Howard

Date: 7/18/19

Attachments
cc: Central Files

DAVID Y. IGE
GOVERNOR OF HAWAII

RECEIVED
LAND DIVISION
19 JUL 24 AM 11:58
DEPT. OF LAND & NATURAL RESOURCES
STATE OF HAWAII

SUZANNE D. CASE
CHAIRPERSON
BOARD OF LAND AND NATURAL RESOURCES
COMMISSION ON WATER RESOURCE MANAGEMENT

STATE OF HAWAII
DEPARTMENT OF LAND AND NATURAL RESOURCES
LAND DIVISION

POST OFFICE BOX 621
HONOLULU, HAWAII 96809

19 JUL 12 PM 12:23 ENGINEERING

July 12, 2019

MEMORANDUM

FROM

TO

TO: **DLNR Agencies:**
X Div. of Aquatic Resources
X Div. of Boating & Ocean Recreation
X Engineering Division
X Div. of Forestry & Wildlife
__Div. of State Parks
X Commission on Water Resource Management
X Office of Conservation & Coastal Lands
X Land Division – Hawaii District
X Historic Preservation

FROM: Russell Y. Tsuji, Land Administrator
SUBJECT: Scoping and Early Consultation for the Proposed **Miloli'i Beach Park Accessibility Improvement Project**
LOCATION: Hoopuloa-Miloli'i, South Kona, Island of Hawaii; TMK: (3) 8-9-004:001
APPLICANT: Bow Engineering & Development, Inc. on behalf of the County of Hawaii, Department of Parks and Recreation

Transmitted for your review and comment is information on the above-referenced subject matter. Please submit comments by **August 1, 2019.**

If no response is received by this date, we will assume your agency has no comments. If you have any questions about this request, please contact Darlene Nakamura at 587-0417 or by email at darlene.k.nakamura@hawaii.gov. Thank you.

( ) We have no objections.
( ) We have no comments.
(✓) Comments are attached.

Signed: _____

Print Name: Carty S. Chang, Chief Engineer

Date: 7/22/19

Attachments
cc: Central Files

DEPARTMENT OF LAND AND NATURAL RESOURCES
ENGINEERING DIVISION

LD/Russell Y. Tsuji
Ref: Scoping and Early Consultation for the Proposed Miloli'i Beach Park Accessibility Improvement Project
TMK(s): (3) 8-9-004:001
Location: Hoopuloa-Miloli'i, South Kona, Island of Hawaii
Applicant: Bow Engineering & Development, Inc. on behalf of the County of Hawaii, Department of Parks and Recreation

COMMENTS

The rules and regulations of the National Flood Insurance Program (NFIP), Title 44 of the Code of Federal Regulations (44CFR), are in effect when development falls within a Special Flood Hazard Area (high risk areas). State projects are required to comply with 44CFR regulations as stipulated in Section 60.12. Be advised that 44CFR reflects the minimum standards as set forth by the NFIP. Local community flood ordinances may stipulate higher standards that can be more restrictive and would take precedence over the minimum NFIP standards.

The owner of the project property and/or their representative is responsible to research the Flood Hazard Zone designation for the project. Flood Hazard Zones are designated on FEMA's Flood Insurance Rate Maps (FIRM), which can be viewed on our Flood Hazard Assessment Tool (FHAT) (http://gis.hawaiinfip.org/FHAT).

If there are questions regarding the local flood ordinances, please contact the applicable County NFIP coordinating agency below:

- Oahu: City and County of Honolulu, Department of Planning and Permitting (808) 768-8098.
- Hawaii Island: County of Hawaii, Department of Public Works (808) 961-8327.
- Maui/Molokai/Lanai County of Maui, Department of Planning (808) 270-7253.
- Kauai: County of Kauai, Department of Public Works (808) 241-4846.

Signed: _____
CARTY S. CHANG, CHIEF ENGINEER

Date: 1/22/09

DAVID Y. IGE
GOVERNOR OF HAWAII

SUZANNE D. CASE
CHAIRPERSON
BOARD OF LAND AND NATURAL RESOURCES
COMMISSION ON WATER RESOURCE MANAGEMENT

STATE OF HAWAII
DEPARTMENT OF LAND AND NATURAL RESOURCES
LAND DIVISION

POST OFFICE BOX 621
HONOLULU, HAWAII 96809

RECEIVED
LAND DIVISION
2019 JUL 24 AM 8:22
DEPT. OF LAND & NATURAL RESOURCES
STATE OF HAWAII

July 12, 2019

MEMORANDUM

TO: **DLNR Agencies:**
X Div. of Aquatic Resources
X Div. of Boating & Ocean Recreation
X Engineering Division
X Div. of Forestry & Wildlife
__Div. of State Parks
X Commission on Water Resource Management
X Office of Conservation & Coastal Lands
X Land Division – Hawaii District
X Historic Preservation

FROM: Russell Y. Tsuji, Land Administrator
SUBJECT: Scoping and Early Consultation for the Proposed **Miloli'i Beach Park Accessibility Improvement Project**
LOCATION: Hoopuloa-Miloli'i, South Kona, Island of Hawaii; TMK: (3) 8-9-004:001
APPLICANT: Bow Engineering & Development, Inc. on behalf of the County of Hawaii, Department of Parks and Recreation

Transmitted for your review and comment is information on the above-referenced subject matter. Please submit comments by **August 1, 2019.**

If no response is received by this date, we will assume your agency has no comments. If you have any questions about this request, please contact Darlene Nakamura at 587-0417 or by email at darlene.k.nakamura@hawaii.gov. Thank you.

(✓) We have no objections.
( ) We have no comments.
( ) Comments are attached.

Signed: _____

Print Name: GORDON C. HEIT

Date: 7/23/19

Attachments
cc: Central Files

DAVID Y. IGE
GOVERNOR OF HAWAII

SUZANNE D. CASE
CHAIRPERSON
BOARD OF LAND AND NATURAL RESOURCES
COMMISSION ON WATER RESOURCE
MANAGEMENT

STATE OF HAWAII
DEPARTMENT OF LAND AND NATURAL RESOURCES
LAND DIVISION

POST OFFICE BOX 621
HONOLULU, HAWAII 96809

August 19, 2019

Bow Engineering & Development, Inc.
Attn: Mr. William Bow
1953 S. Beretania Street, PH-A
Honolulu, Hawaii 96826

via email: wbow@bowengineering.com

Dear Mr. Bow:

SUBJECT: Scoping and Early Consultation for the Proposed **Miloli'i Beach Park Accessibility Improvement Project** locate at Hoopuloa-Miloli'i, South Kona, Island of Hawaii; TMK: (3) 8-9-004:001 on behalf of the County of Hawaii, Department of Parks and Recreation

Thank you for the opportunity to review and comment on the subject matter. In addition to our previous comments dated August 2, 2019, enclosed are comments from the (a) Division of Aquatic Resources, (b) Division of Forestry & Wildlife, and (c) Office of Conservation & Coastal Lands on the subject matter. Should you have any questions, please feel free to contact Darlene Nakamura at (808) 587-0417 or email: darlene.k.nakamura@hawaii.gov. Thank you.

Sincerely,

Russell Y. Tsuji
Land Administrator

Enclosures
cc: Central Files

DAVID Y. IGE
GOVERNOR OF HAWAII

SUZANNE D. CASE
CHAIRPERSON
BOARD OF LAND AND NATURAL RESOURCES
COMMISSION ON WATER RESOURCE
MANAGEMENT

STATE OF HAWAII
DEPARTMENT OF LAND AND NATURAL RESOURCES
LAND DIVISION

POST OFFICE BOX 621
HONOLULU, HAWAII 96809

RECEIVED
JUL 12 2019
Division of Aquatic Resources
DAR 5973

RECEIVED
LAND DIVISION
2019 AUG -5 AM 10:55
DEPT. OF LAND & NATURAL RESOURCES
STATE OF HAWAII

July 12, 2019

MEMORANDUM

TO: **DLNR Agencies:**
X Div. of Aquatic Resources
X Div. of Boating & Ocean Recreation
X Engineering Division
X Div. of Forestry & Wildlife
__Div. of State Parks
X Commission on Water Resource Management
X Office of Conservation & Coastal Lands
X Land Division – Hawaii District
X Historic Preservation

FROM: Russell Y. Tsuji, Land Administrator
SUBJECT: Scoping and Early Consultation for the Proposed **Miloli'i Beach Park Accessibility Improvement Project**
LOCATION: Hoopuloa-Miloli'i, South Kona, Island of Hawaii; TMK: (3) 8-9-004:001
APPLICANT: Bow Engineering & Development, Inc. on behalf of the County of Hawaii, Department of Parks and Recreation

Transmitted for your review and comment is information on the above-referenced subject matter. Please submit comments by **August 1, 2019.**

If no response is received by this date, we will assume your agency has no comments. If you have any questions about this request, please contact Darlene Nakamura at 587-0417 or by email at darlene.k.nakamura@hawaii.gov. Thank you.

( ) We have no objections.
( ) We have no comments.
(✓) Comments are attached.

Signed: _____

Print Name: Brian Neilson

Date: 8/2/19

Attachments
cc: Central Files

DAVID Y. IGE
GOVERNOR OF
HAWAII

SUZANNE D. CASE
CHAIRPERSON
BOARD OF LAND AND NATURAL RESOURCES
COMMISSION ON WATER RESOURCE MANAGEMENT

ROBERT K. MASUDA
FIRST DEPUTY

M. KALEO MANUEL
DEPUTY DIRECTOR : WATER

AQUATIC RESOURCES
BOATING AND OCEAN RECREATION
BUREAU OF CONVEYANCES
COMMISSION ON WATER RESOURCE MANAGEMENT
CONSERVATION AND COASTAL LANDS
CONSERVATION AND RESOURCES ENFORCEMENT
ENGINEERING
FORESTRY AND WILDLIFE
HISTORIC PRESERVATION
KAHOOLAWE ISLAND RESERVE COMMISSION
LAND
STATE PARKS

STATE OF HAWAII
DEPARTMENT OF LAND AND NATURAL RESOURCES
DIVISION OF AQUATIC RESOURCES
1151 PUNCHBOWL STREET, ROOM 330
HONOLULU, HAWAII 96813

Date: 8/1/2019
DAR # 5973

MEMORANDUM

TO: Brian J. Neilson
DAR Administrator

FROM: Nicole Sanderlin NS, Aquatic Biologist

SUBJECT: Scoping and Early Consultation for the Proposed Miloli'i Beach Park Accessibility Improvement Project

Request Submitted by: Russell Y. Tsuji, Land Administrator

Location of Project: Hoopuloa-Miloli'i, South Kona, Island of Hawaii; TMK: (3) 8-9-004:001

Brief Description of Project:

The Department of Parks and Recreation proposes to improve Miloli'i Beach Park buildings and amenities to comply with current Americans with Disabilities Act (ADA) guidelines. Restrooms, pavilion, parking lot, and walkways will be demolished and re-constructed or refurbished to meet current ADA standards.

Comments:

☐ No Comments ☒ Comments Attached

Thank you for providing DAR the opportunity to review and comment on the proposed project. Should there be any changes to the project plan, DAR requests the opportunity to review and comment on those changes.

Comments Approved: [signature] Date: 8/2/19
Brian J. Neilson
DAR Administrator

DAR# 5973

Comments

The DAR West Hawaii requests that these issues be addressed in the environmental assessment:

-Environmental impacts of construction including sedimentation from dust and dirt during demolition of current facilities and construction of new buildings and features to the near shore ecosystem and ponds and tidepools in the area.

-Environmental impacts of the new septic tank and the proposed leach field on the near shore ecosystem.

2014

DAVID Y. IGE
GOVERNOR OF HAWAII

SUZANNE D. CASE
CHAIRPERSON
BOARD OF LAND AND NATURAL RESOURCES
COMMISSION ON WATER RESOURCE MANAGEMENT

RECEIVED
LAND DIVISION
2019 AUG -8 AM 11:07
DEPT. OF LAND & NATURAL RESOURCES
STATE OF HAWAII

STATE OF HAWAII
DEPARTMENT OF LAND AND NATURAL RESOURCES
LAND DIVISION

POST OFFICE BOX 621
HONOLULU, HAWAII 96809

July 12, 2019

MEMORANDUM

FRM
TO:

DLNR Agencies:
X Div. of Aquatic Resources
X Div. of Boating & Ocean Recreation
X Engineering Division
X Div. of Forestry & Wildlife
__Div. of State Parks
X Commission on Water Resource Management
X Office of Conservation & Coastal Lands
X Land Division – Hawaii District
X Historic Preservation

To
FROM: Russell Y. Tsuji, Land Administrator
SUBJECT: Scoping and Early Consultation for the Proposed **Miloli'i Beach Park Accessibility Improvement Project**
LOCATION: Hoopuloa-Miloli'i, South Kona, Island of Hawaii; TMK: (3) 8-9-004:001
APPLICANT: Bow Engineering & Development, Inc. on behalf of the County of Hawaii, Department of Parks and Recreation

Transmitted for your review and comment is information on the above-referenced subject matter. Please submit comments by **August 1, 2019.**

If no response is received by this date, we will assume your agency has no comments. If you have any questions about this request, please contact Darlene Nakamura at 587-0417 or by email at darlene.k.nakamura@hawaii.gov. Thank you.

(✓) We have no objections.
(✓) We have no comments.
( ) Comments are attached.

Signed: _____

Print Name: **DAVID G. SMITH, Administrator**

Date: 8/7/19

Attachments
cc: Central Files

mc. HA-20-8

DAVID Y. IGE
GOVERNOR OF HAWAII

SUZANNE D. CASE
CHAIRPERSON
BOARD OF LAND AND NATURAL RESOURCES
COMMISSION ON WATER RESOURCE MANAGEMENT

RECEIVED
OFFICE OF CONSERVATION AND COASTAL LANDS
2019 JUL 12 P 1:26

STATE OF HAWAII
DEPARTMENT OF LAND AND NATURAL RESOURCES
LAND DIVISION

POST OFFICE BOX 621
HONOLULU, HAWAII 96809

July 12, 2019

RECEIVED
LAND DIVISION
2019 AUG -2 AM 11:06
DEPT. OF LAND & NATURAL RESOURCES
STATE OF HAWAII

MEMORANDUM

TO: **DLNR Agencies:**
X Div. of Aquatic Resources
X Div. of Boating & Ocean Recreation
X Engineering Division
X Div. of Forestry & Wildlife
__ Div. of State Parks
X Commission on Water Resource Management
X Office of Conservation & Coastal Lands
X Land Division – Hawaii District
X Historic Preservation

FROM: Russell Y. Tsuji, Land Administrator
SUBJECT: Scoping and Early Consultation for the Proposed **Miloli'i Beach Park Accessibility Improvement Project**
LOCATION: Hoopuloa-Miloli'i, South Kona, Island of Hawaii; TMK: (3) 8-9-004:001
APPLICANT: Bow Engineering & Development, Inc. on behalf of the County of Hawaii, Department of Parks and Recreation

Transmitted for your review and comment is information on the above-referenced subject matter. Please submit comments by **August 1, 2019.**

If no response is received by this date, we will assume your agency has no comments. If you have any questions about this request, please contact Darlene Nakamura at 587-0417 or by email at darlene.k.nakamura@hawaii.gov. Thank you.

( ) We have no objections.
( ) We have no comments.
(✓) Comments are attached.

Signed: Michael Cain
Print Name: Michael Cain
Date: 1 Aug 19

Project might trigger need for Conservation District Use permit. Please consult with office of Cons. and Coastal Lands

Attachments
cc: Central Files

Harry Kim
Mayor

Wil Okabe
Managing Director

Roxcie L. Waltjen
Director

Maurice C. Messina
Deputy Director

County of Hawai`i

DEPARTMENT OF PARKS AND RECREATION
101 Pauahi Street, Suite 6 • Hilo, Hawai'i 96720
(808) 961-8311 • Fax (808) 961-8411
Email: parks_recreation@hawaiicounty.gov
http://www.hawaiicounty.gov/parks-and-recreation/

November 25, 2019

State of Hawai'i
Department of Land and Natural Resources
Office of Conservation and Coastal Lands
1151 Punchbowl Street Room 131
Honolulu, Hawai'i 96813

[Advanced copy w/ attachment via email: Samuel.J.Lemmo@hawaii.gov]

Attn: Mr. Samuel J. Lemmo, Administrator

Subject: **Miloli'i Beach Park Accessibility Improvements Project; Job No. PR-4469 TMK (3)8-9-004:001 [State Land Use Conservation District, General Subzone]**

The County of Hawai'i is under federal court order to implement accessibility improvements at the subject park in an expedited timeframe. In the course of our project planning process, we are informed that the site is located in the General Subzone of the State Land Use Conservation District. As such, we understand that the project's scope and the park's redevelopment potential are predominantly influenced and controlled by your agency and its interpretation, application and enforcement of Hawai'i Revised Statutes §183C and Hawai'i Administrative Rules §13-5. Therefore, we respectfully request your guidance in the development of this park's architectural barrier removal scope, which is considerably broad and involved.

Miloli'i Village, in which the park is located, is quite isolated geographically, located at the extreme end of an approximately five mile drive off of Highway 11 in which one descends roughly 3,400 feet in elevation, in the southeastern portion of the island. The park is a vitally important resource for the community in that all manners of parties and community gatherings are held at the park's hālau structure, the pavilion is used as a community library and education center, the sports court is the main venue for recreation, and camping in the park is a cherished pastime for countless families in the village.

We've held two community meetings at the park in the past two months in an attempt to understand the needs and concerns of the community relative to how they use park and to obtain feedback on the proposed scope of the project in order to guide us in delivering an end product that would be of greatest benefit to the park's most frequent users. So far, it seems that the majority sentiment regarding park improvements is to retain the park amenities and features that currently exist while minimizing the amount of changes and improvements to the park as possible. However, we are of the position that both the restroom and hālau/pavilion structures must be replaced in their entirety due to their age and current conditions and extensive need for

repair and modifications. The attached site plan is provided with extensive annotation in an attempt to accurately convey the existing conditions and to propose to the community the preferred scope of the proposed project. This is where we are in need of guidance from your agency to determine what your rules dictate and how they influence what is possibly in the redevelopment of this site. We have consulted with the Planning Department on their rules and regulations and were advised by Mr. Alex Roy, Planner to contact your office for assistance immediately. We have also consulted with the Department of Public Works Engineering Division on how their rules and regulations influence the decisions made on our project's scope.

Upon your review of this correspondence, we would be extremely appreciative if you would contact our Park Planner, Mr. James Komata (961-8531 or James.Komata@hawaiicounty.gov) at your earliest convenience to discuss this matter in greater detail. We have a team of design professionals awaiting further guidance on this project and the Miloli'i Village residents are anxiously awaiting further information from us on what the park's improvement project's scope will entail.

Very Truly Yours,

Roxcie Waltjen
Director

Attachment: 20191125L_DLNR-OCCL.SL.rw_SLU-CD.Consultation.MapExhibit

cc: Mr. James Komata, Park Planner (via email)
Mr. Jeffrey Ochi, Park Projects Manager (via email)
Mr. Alex Roy, Planner, Planning Department (via email)

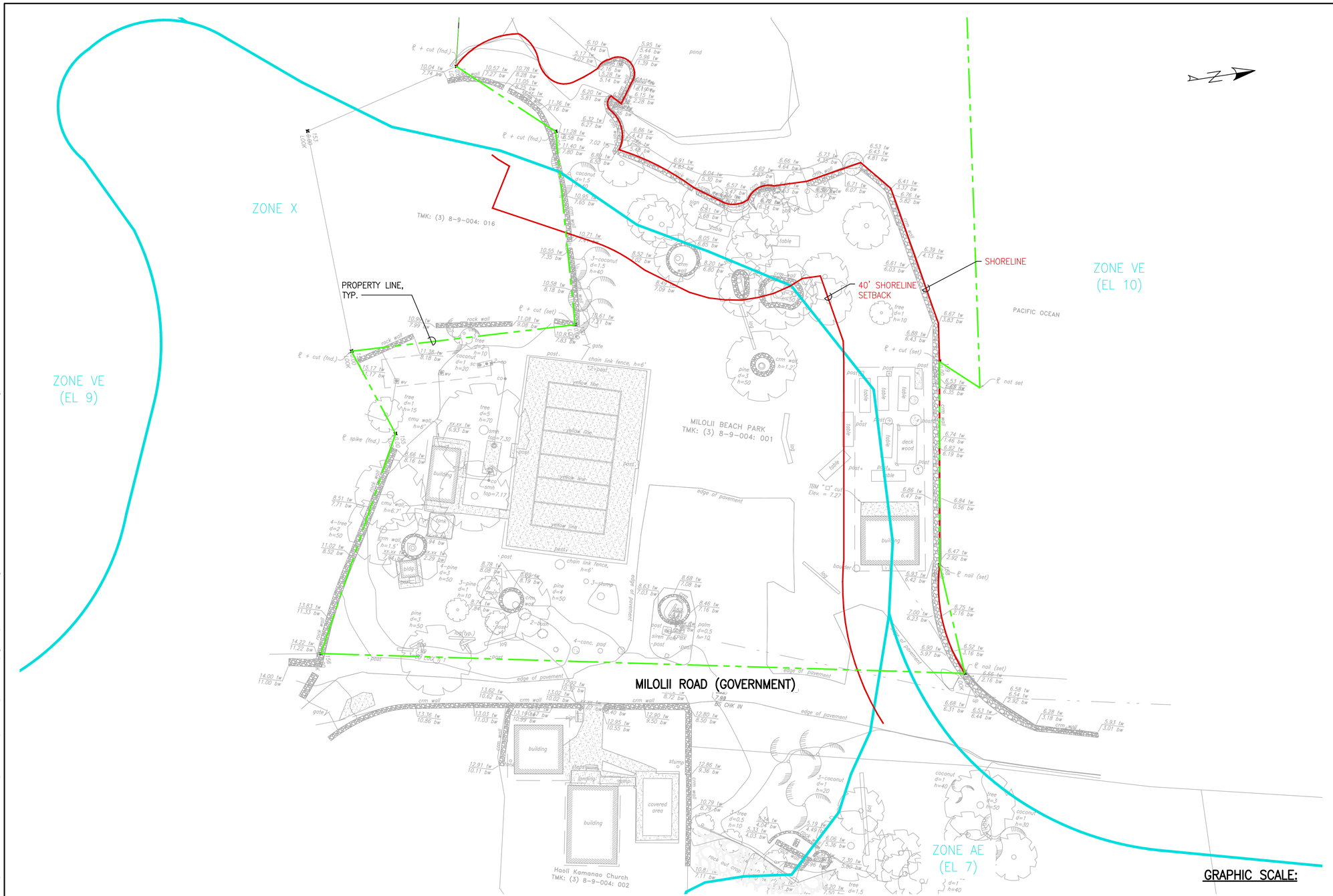

EXISTING SITE PLAN

SCALE: 1" = 20'

Plotted: Wed, 13 Nov 2019 – 1:57pm By: MMCHANG
File Name: H:\P2018\18050 Hawaii Parks ADA Improvements\06 CADD\Milolii Park\Figures\Milolii – Existing Site Plan_Flood Zones and Shoreline Setback.dwg

MARK	DATE	DESCRIPTION

REVIEWED: DEPARTMENT OF PARKS AND RECREATION DATE

COUNTY OF HAWAI'I
DEPARTMENT OF PARKS & RECREATION
101 PAUAHI STREET, SUITE 6 | HILO, HAWAII 96720 | PHONE: 808.961.8311 | FAX: 808.961.8411

ACCESSIBILITY IMPROVEMENTS PROJECT -
MILOLI'I BEACH PARK

JOB NO.: XX-XXXX MILOLI'I, SOUTH KONA, HAWAI'I TMK: (3) 8-9-004: 001

DESIGNED BY:
DRAWN BY:
CHECKED BY:

SHEET NO.
FIG 1

___ OF __XX__ SHEETS

DATE: NOVEMBER 2019

PLAN SHEET DESCRIPTION:

DAVID Y. IGE
GOVERNOR OF
HAWAII

SUZANNE D. CASE
CHAIRPERSON
BOARD OF LAND AND NATURAL RESOURCES
COMMISSION ON WATER RESOURCE MANAGEMENT

ROBERT K. MASUDA
FIRST DEPUTY

M. KALEO MANUEL
DEPUTY DIRECTOR - WATER

AQUATIC RESOURCES
BOATING AND OCEAN RECREATION
BUREAU OF CONVEYANCES
COMMISSION ON WATER RESOURCE MANAGEMENT
CONSERVATION AND COASTAL LANDS
CONSERVATION AND RESOURCES ENFORCEMENT
ENGINEERING
FORESTRY AND WILDLIFE
HISTORIC PRESERVATION
KAHOOLAWE ISLAND RESERVE COMMISSION
LAND
STATE PARKS

STATE OF HAWAII
DEPARTMENT OF LAND AND NATURAL RESOURCES
OFFICE OF CONSERVATION AND COASTAL LANDS
POST OFFICE BOX 621
HONOLULU, HAWAII 96809

REF: OCCL: TF

COR: HA-20-90

DEC - 3 2019

Roxcie Waltjen
Director
County of Hawaii, Department of Parks and Recreation
101 Pauahi Street, Suite 6
Hilo, Hawaii 96720

SUBJECT: Milolii Beach Park Accessibility Improvements Project; Job No. PR-4469.
Hoopuloa-Milolii, South Kona, Hawaii
TMK: (3) 8-9-004:001

Dear Ms. Waltjen:

The Office of Conservation and Coastal Lands (OCCL) is in receipt of your correspondence and attached Site Plan regarding the subject matter. According to the information you provided, the County of Hawaii and its Department of Parks and Recreation are under federal court order to implement accessibility improvements for the Milolii Beach Park.

The proposed project involves improving the facilities to make them compliant with the Americans with Disabilities Act (ADA). The attached Site Plan offered more annotation and details regarding the existing conditions and preferred scope of the project. The proposed ADA improvements to the Milolii Beach Park will include the relocation and replacement of both the restroom and halau/pavilion structures due to their age, current conditions, and extensive need for repair and modifications. Additionally, the existing outdoor basketball and volleyball courts as well as the existing asphalt parking area will need to be replaced and repaved according to ADA standards. The community has also expressed the desire to have a portion of the park paved as a turnaround for trucks with boat trailers as well as to address safety concerns related to the uneven surfaces that currently exist in the area. Other community supported improvements that will also need to be ADA compliant include the provision for a new childrens playground to replace the playground elements that were removed in the past as well as the provision of picnic/camping amenities to serve those with disabilities. The Department of Parks and Recreation would also like to demolish and replace a water storage tank and shed to meet the Department of Health requirements for these types of structures.

The Department of Parks and Recreation has scoped the proposed improvements to the Milolii Beach Park and held two community meetings at the park to better understand the needs and concerns regarding the subject matter and proposed improvements. Your letter states that the Department of

Parks and Recreation would like to retain the park amenities and features that currently exist while minimizing the amount of changes and improvements to the park as possible. The Department of Parks and Recreation is seeking OCCL's guidance regarding the Conservation District's Rules and Regulations and their potential impact to the redevelopment of the site as well as the appropriate level of permitting for the proposed improvements.

OCCL notes that the proposed project will occur on the parcel with the TMK: (3) 8-9-004:001 and lies within the General and Special Subzones of the Conservation District. The Milolii Beach Park was created by Executive Order (EO) 2435 and has been under the County of Hawaii's management since 1985. Based on the information you have provided, it appears that the proposed projects will not expand the park or its facilities beyond what currently exists. Besides the demolition and relocation of the restrooms, halau/pavilion, and water storage structures, most of the proposed projects involves minor alterations or cosmetic work to existing structures. OCCL has therefore determined that the proposed Accessibility Improvements Project at Milolii Beach Park is an identified land use pursuant to Hawaii Administrative Rules (HAR), §13-5-22 P-8 STRUCTURES AND LAND USES, EXISTING (B-1) *Demolition, removal, or minor alteration of existing structures, facilities, land, and equipment. Any historic properties shall be evaluated by the department for historical significance* and this would require filing a Site Plan Approval application. Applications can be found at https://dlnr.hawaii.gov/occl/forms-2/. Please provide evidence that the Department of Parks and Recreation has consulted with the State Historic Preservation Division (SHPD) and initiated historical significance review of the proposed project by submitting the Hawaii Revised Statures (HRS) 6E Submittal Form. OCCL also suggests that the Department of Parks and Recreation declare the project exempt from the preparation of an environmental assessment (EA) under the authority of HRS Chapter 343 and HAR Chapter 11-200.1 or provide evidence that an EA has been published and reviewed.

Should you have any questions, please feel free to contact Trevor Fitzpatrick of the Office of Conservation and Coastal Lands at 587-0373.

Sincerely,

Samuel J. Lemmo, Administrator
Office of Conservation and Coastal Lands

CC: Hawaii District Land Division Office
State Historic Preservation Division
County of Hawaii, Planning Department

Harry Kim
Mayor

Wil Okabe
Managing Director

David Yamamoto, P.E.
Director

Allan G. Simeon, P.E.
Deputy Director

County of Hawai'i
DEPARTMENT OF PUBLIC WORKS
Aupuni Center
101 Pauahi Street, Suite 7 · Hilo, Hawai'i 96720-4224
(808) 961-8321 · Fax (808) 961-8630
public_works@hawaiicounty.gov

July 26, 2019

William Bow
Bow Engineering & Development, Inc.
1953 South Beretania Street, PH-A
Honolulu, HI 96826
(via email to: wbow@bowengineering.com)

Subject: Miloli'i Beach Park Accessibility Improvements Project
Scoping and Early Consultation
Tax Map Key: (3) 8-9-004:001

We have reviewed the request for early consultation for an Environmental Assessment and our comments are as follows:

1. All development generated runoff shall be disposed of on-site and shall not be directed toward adjacent properties.

2. Flood zones VE and AE affect the subject parcel as designated by the Flood Insurance Rate Map (FIRM). New construction and substantial improvements shall comply with Chapter 27 – Floodplain Management – of the Hawaii County Code. Existing drainage patterns with respect to adjacent properties shall be maintained. Please identify the flood zone boundaries on the site plan exhibits.

3. All earthwork and grading shall conform to Chapter 10 – Erosion and Sedimentation Control – of the Hawaii County Code.

Should there be any questions concerning this matter, please feel free to contact Natalie Whitworth of our Kona Engineering Division office at 323-4853.

Natalie Whitworth

for Ben Ishii, Division Chief
Engineering Division

NW

Copy: William Bow (hard copy)
Engineering-HILO/KONA
Planning Department- Hilo

DEPARTMENT OF WATER SUPPLY • COUNTY OF HAWAI'I
345 KEKŪANAŌ'A STREET, SUITE 20 • HILO, HAWAI'I 96720
TELEPHONE (808) 961-8050 • FAX (808) 961-8657

August 12, 2019

Mr. William Bow
Bow Engineering & Development, Inc.
1953 South Beretania Street, PH-A
Honolulu, HI 96826

Dear Mr. Bow:

Subject: Miloli'i Beach Park Accessibility Improvement Project
Applicant – Jeff Ochi, Project Manager
Tax Map Key 8-9-004:001

We have reviewed the subject application and have the following comments and conditions.

Please be informed that the subject property is not within the service limits of the Department's existing water system facilities.

Therefore, the Department's existing water system facilities cannot support the proposed subdivision at this time. Extensive improvements and additions, which may include, but not be limited to, source, storage, booster pumps, transmission, and distribution facilities, would be required.

Should there be any questions, please contact Mr. Troy Samura of our Water Resources and Planning Branch at 961-8070, extension 255.

Sincerely yours,

Keith K. Okamoto, P.E.
Manager–Chief Engineer

TS:dfg

copy – County of Hawai'i, Planning Department
County of Hawai'i, Department of Parks and Recreation

DRAFT ENVIRONMENTAL ASSESSMENT COMMENT LETTERS

United States Department of the Interior

FISH AND WILDLIFE SERVICE
Pacific Islands Fish and Wildlife Office
300 Ala Moana Boulevard, Room 3-122
Honolulu, Hawaii 96850

In Reply Refer to:
01EPIF00-2020-TA-0433

August 31, 2020

Mr. William F. Bow, M.S.
Environmental Director
Bow Engineering and Development, Inc.
1953 S. Beretania Street, PH-A
Honolulu, Hawaii 96826

Subject: Technical Assistance for the Draft Environmental Assessment for the Milolii Beach Park Accessibility Improvements in the South Kona District, Island and County of Hawaii

Dear Mr. William F. Bow:

The U.S. Fish and Wildlife Service (Service) received your correspondence on August 8, 2020, requesting comments for the Draft Environmental Assessment for the Milolii Beach Park Accessibility Improvement Project at Tax Map Key (TMK): (3) 8-0-004:001, in South Kona. The Service offers the following comments to assist you in your planning process so that impacts to trust resources can be avoided through site preparation, construction, and operation. Our comments are provided under the authorities of the Endangered Species Act of 1973 (ESA), as amended (16 U.S.C 1531 *et seq.*).

Project Description

The Department of Parks and Recreation proposes to improve the Milolii Beach Park building and amenities that comply with the current Americans with Disabilities Act (ADA) guidelines. The project includes the replacement of an existing pavilion with proper permits to meet the current ADA standards; the replacement of the comfort station to meet current ADA standards; the replacement of the non-potable storage and booster pump station for the new comfort station; the improvement of the parking lot to be ADA accessible, the improvement of the walkways connecting to the comfort station with the parking area and park facilities to ADA accessibility; the reconstruction and resurfacing of the basketball and volleyball courts; the construction of a new playground; the designation of a boat turnaround are area, and the installation of a vehicular barriers to prevent unauthorized vehicles from accessing the shoreline and pavilion.

Based on information you provided and pertinent information in our files, including data compiled by the Hawaii Biodiversity and Mapping Project, there are ten listed species in the immediate vicinity of the project area: the federally endangered Hawaiian hoary bat (*Lasiurus cinereus semotus*), the threatened Hawaiian goose *(Branta (Nesochen) sandvicensis)*, endangered Hawaiian stilt (*Himantopus mexicanus knudseni*), endangered Hawaiian coot (*Fulica alai*), endangered Hawaiian duck (*Anas wyvilliana*), the threatened Green sea turtle (*Chelonia mydas*), endangered Hawksbill sea turtle (*Eretmochelys imbricata*), endangered Hawaiian yellow-faced bees (*Hylaeus anthracinus*), endangered *Procaris* hawaiana, endangered *Vetericaris chaceorum*, endangered Pacific damselfly (*Megalagrion pacificum*), and the endangered Orange-black (*Megalagrion xanthomelas*). Additionally, the endangered Hawaiian petrel (*Pterodroma sandwichensis*), band-rumped storm-petrel (*Oceanodroma castro*), and the threatened Newell's shearwater (*Puffinus auricularis newelli*) may transit the project area flying to upland breeding colonies.

To avoid and minimize potential project impacts to listed species, the following measures are recommended:

Hawaiian hoary bat

The federally endangered Hawaiian hoary bat roosts in both exotic and native woody vegetation across all islands and will leave young unattended in trees and shrubs when they forage. If trees or shrubs 15 feet or taller are cleared during the pupping season, there is a risk that young bats could inadvertently be harmed or killed since they are too young to fly or may not move away. Additionally, Hawaiian hoary bats forage for insects from as low as 3 feet to higher than 500 feet above the ground and can become entangled in barbed wire used for fencing.

To avoid and minimize impacts to the endangered Hawaiian hoary bat we recommend you incorporate the following applicable measures into your project description:

- Do not disturb, remove, or trim woody plants greater than 15 feet tall during the bat birthing and pup rearing season (June 1 through September 15).
- Do not use barbed wire for fencing.

Hawaiian goose

The federally threatened Hawaiian goose is found on the islands of Hawaii, Maui, Molokai, and Kauai. They are observed in a variety of habitats, but prefer open areas, such as pastures, golf courses, wetlands, natural grasslands and shrublands, and lava flows. Threats to the species include introduced mammalian and avian predators, wind facilities, and vehicle strikes.

To avoid and minimize potential project impacts to Hawaiian geese we recommend you incorporate the following applicable measures into your project description:

- Do not approach, feed, or disturb Hawaiian geese.
- If Hawaiian geese are observed loafing or foraging within the project area during the breeding season (September through April), have a biologist familiar with the nesting behavior of nene survey for nests in and around the project area prior to the resumption of

any work. Repeat surveys after any subsequent delay of work of 3 or more days (during which the birds may attempt to nest).

  - Cease all work immediately and contact the Service for further guidance if a nest is discovered within a radius of 150 feet of proposed work, or a previously undiscovered nest is found within said radius after work begins.

- In areas where Hawaiian geese are known to be present, post and implement reduced speed limits, and inform project personnel and contractors about the presence of endangered species on-site.

Green and Hawksbill sea turtles

The Service consults on sea turtles and their use of terrestrial habitats (beaches where nesting and/or basking is known to occur), whereas the National Marine Fisheries Service (NMFS) consults on sea turtles and their use of off-shore and open ocean habitats. We recommend that you consult with NMFS regarding the potential impacts from the proposed project to sea turtles in off-shore and open ocean habitats.

Green sea turtles may nest on any sandy beach area in the Pacific Islands. Hawksbill sea turtles exhibit a wide tolerance for nesting substrate (ranging from sandy beach to crushed coral) with nests typically placed under vegetation. Both species exhibit strong nesting site fidelity. Nesting occurs on beaches from May through September, peaking in June and July, with hatchlings emerging through November and December.

Construction on, or in the vicinity of, beaches can result in sand and sediment compaction, sea turtle nest destruction, beach erosion, contaminant and nutrient runoff, and an increase in direct and ambient light pollution which may disorient hatchlings or deter nesting females. Off-road vehicle traffic may result in direct impacts to sea turtles and nests, and also contributes to habitat degradation through erosion and compaction.

Projects that alter the natural beach profile, such as nourishment and hardening, including the placement of seawalls, jetties, sandbags, and other structures, are known to reduce the suitability of on-shore habitat for sea turtles. These types of projects often result in sand compaction, erosion, and additional sedimentation in nearshore habitats, resulting in adverse effects to the ecological community and future sea turtle nests. The hardening of a shoreline increases the potential for erosion in adjacent areas, resulting in subsequent requests to install stabilization structures or conduct beach nourishment in adjacent areas. Given projected sea level rise estimates, the likelihood of increase in storm surge intensity, and other factors associated with climate change, we anticipate that beach erosion will continue and likely increase.

Where possible, projects should consider alternatives that avoid the modification or hardening of coastlines. Beach nourishment or beach hardening projects should evaluate the long-term effect to sea turtle nesting habitat and consider the cumulative effects.

To avoid and minimize project impacts to sea turtles and their nests we recommend you incorporate the following applicable measures into your project description:

- No vehicle use on or modification of the beach/dune environment during the sea turtle nesting or hatching season (May to December).

- Do not remove native dune vegetation.
    - Incorporate applicable best management practices regarding Work in Aquatic Environments (see enclosed) into the project design.
    - Have a biologist familiar with sea turtles conduct a visual survey of the project site to ensure no basking sea turtles are present.
        - If a basking sea turtle is found within the project area, cease all mechanical or construction activities within 100 feet until the animal voluntarily leaves the area.
        - Cease all activities between the basking turtle and the ocean.
    - Remove any project-related debris, trash, or equipment from the beach or dune if not actively being used.
    - Do not stockpile project-related materials in the intertidal zone, reef flats, or stream channels.

Lighting: Optimal nesting habitat is a dark beach free of barriers that restrict sea turtle movement. Nesting turtles may be deterred from approaching or laying successful nests on lighted or disturbed beaches. They may become disoriented by artificial lighting, leading to exhaustion and placement of a nest in an inappropriate location (such as at or below the high tide line). Hatchlings that emerge from nests may also be disoriented by artificial lighting. Inland areas visible from the beach should be sufficiently dark to allow for successful navigation to the ocean.

To avoid and minimize project impacts to sea turtles from lighting we recommend incorporating the following applicable measures into your project description:

- Avoid nighttime work during the nesting and hatching season (May to December).
- Minimize the use of lighting and shield all project-related lights so the light is not visible from any beach.
    - If lights can't be fully shielded or if headlights must be used, fully enclose the light source with light filtering tape or filters.
- Incorporate design measures into the construction or operation of buildings adjacent to the beach to reduce ambient outdoor lighting such as:
    - Tinting or using automatic window shades for exterior windows that face the beach;
    - Reducing the height of exterior lighting to below 3 feet and pointed downward or away from the beach; and
    - Minimize light intensity to the lowest level feasible and, when possible, include timers and motion sensors.

Hawaiian stilt, Hawaiian coot, and Hawaiian duck:

Listed Hawaiian waterbirds are found in fresh and brackish-water marshes and natural or man-made ponds. Hawaiian stilts may also be found wherever ephemeral or persistent standing water may occur. Threats to these species include non-native predators, habitat loss, and habitat degradation. Hawaiian ducks are also subject to threats from hybridization with introduced mallards.

Based on the project details provided, our information suggests that your project may result in standing water or the creation of open water, thus attracting Hawaiian waterbirds to the site. In particular, the Hawaiian stilt is known to nest in sub-optimal locations (e.g. any ponding water), if water is present. Hawaiian waterbirds attracted to sub-optimal habitat may suffer adverse impacts, such as predation and reduced reproductive success, and thus the project may create an attractive nuisance. Therefore, we recommend you work with our office during project planning so that we may assist you in developing measures to avoid impacts to listed species (e.g., fencing, vegetation control, predator management).

To avoid and minimize potential project impacts to Hawaiian waterbirds we recommend you incorporate the following applicable measures into your project description:

- In areas where waterbirds are known to be present, post and implement reduced speed limits, and inform project personnel and contractors about the presence of endangered species on-site.
- If water resources are located within or adjacent to the project site, incorporate applicable best management practices regarding work in aquatic environments into the project design (see enclosure).
- Have a biological monitor that is familiar with the species' biology conduct Hawaiian waterbird nest surveys where appropriate habitat occurs within the vicinity of the proposed project site prior to project initiation. Repeat surveys again within 3 days of project initiation and after any subsequent delay of work of 3 or more days (during which the birds may attempt to nest). If a nest or active brood is found:
    - Contact the Service within 48 hours for further guidance.
    - Establish and maintain a 100-foot buffer around all active nests and/or broods until the chicks/ducklings have fledged. Do not conduct potentially disruptive activities or habitat alteration within this buffer.
    - Have a biological monitor that is familiar with the species' biology present on the project site during all construction or earth moving activities until the chicks/ducklings fledge to ensure that Hawaiian waterbirds and nests are not adversely impacted.

Hawaiian petrel, Newell's shearwater, and band-rumped storm petrel

Hawaiian seabirds may traverse the project area at night during the breeding, nesting and fledging seasons (March 1 to December 15). Outdoor lighting could result in seabird disorientation, fallout, and injury or mortality. Seabirds are attracted to lights and after circling the lights they may become exhausted and collide with nearby wires, buildings, or other structures or they may land on the ground. Downed seabirds are subject to increased mortality due to collision with automobiles, starvation, and predation by dogs, cats, and other predators. Young birds (fledglings) traversing the project area between September 15 and December 15, in their first flights from their mountain nests to the sea, are particularly vulnerable.

To avoid and minimize potential project impacts to seabirds, the project:

- Fully shield all outdoor lights so the bulb can only be seen from below bulb height and only use when necessary.

- Install automatic motion sensor switches and controls on all outdoor lights or turn off lights when human activity is not occurring in the lighted area.
- Avoid nighttime construction during the seabird fledging period, September 15 through December 15.

Hawaiian yellow-faced bee, *Hylaeus anthracinus*

General species information (bold islands are known populations):

Species	Island(s)	Habitat
H. anthracinus	**Hawaii, Maui, Kahoolawe,** Lanai, **Molokai, Oahu**	Coastal and lowland dry forests

Coastal populations of yellow-faced bees occur in habitat along rocky shorelines with *Scaevola taccada* (naupaka) and *Heliotropium foertherianum* (tree heliotrope) with either landscaped vegetation, alien kiawe (*Prosopis pallida*), or bare rock inland. Bees are restricted to an extremely narrow corridor, typically 10–20 meters wide, and do not occur on sandy beaches or inland, or on landscaped native plants on hotel grounds. Documented nectar plants include naupaka, *Sida fallax* (ilima), *Chamaesyce* spp. (akoko), *Argemone glauca* (pua kala), *Myoporum sandwicense* (naio), and tree heliotrope.

Threats to yellow-faced bees include habitat destruction and modification from land use change, nonnative plants, ungulates, and fire, along with predation by nonnative ants and wasps.

To avoid and minimize project impacts to yellow-faced bees and their nests, we recommend you incorporate the following applicable measures into your project description:

- If an action will occur in or adjacent to known occupied habitat, a buffer area around the habitat may be required and can be worked out on a site-specific basis through consultation with the Service.
- For coastal species, protect all coastal strand habitat from human disturbance, including:
    - No fires or wood collecting
    - Leave woody debris in place
    - Restrict vehicles to existing roads and trails
    - Post educational signs to inform people of the presence of sensitive species.

Procaris* hawaiana, *Vetericaris chaceorum*, *M. pacificum*, and *M. xanthomelas

M. pacificum is found in seepage-fed pools cut off from the main stream channel, usually in areas with thick vegetation. Formerly found on all islands, now known from Molokai, Maui, and Hawaii Islands at low elevations.

M. xanthomelas is known from Hawaii, Maui, Lanai, Molokai, Oahu, and formerly Kauai. It breeds in a widespread number of sites, including anchialine pools, coastal wetlands, small streams, and artificial ponds at low elevations.

Hawaiian damselflies are found in aquatic habitats across the islands, with high species endemism within islands. Breeding habitat includes anchialine pools, perennial streams, marshes, ponds, and even artificial pools and seeps. Major threats include introduced fish, amphibians,

and invertebrates in streams, reduced stream flow from drought and water diversion, small isolated populations, reduced habitat quality from ungulates and nonnative plants, and possibly over-collection.

- The U.S. Fish and Wildlife Service Recommended Standard Best Management Practices for Work in Aquatic Environments should be incorporated into the project description to minimize the degradation of water quality and impacts to fish and wildlife resources.
- Permits are required for accurate surveys of this species, so consult with the Service if work will be done in proximity to stream areas or within water bodies.

Anchialine Pools

P. hawaiana is restricted to a small number of anchialine pools on Hawaii and Maui, while *V. chaceorum* is found in only two anchialine pool areas of Hawaii. Threats to these species include habitat loss due to in-filling and bulldozing of anchialine pools, waste disposal including used oil and grease into pools, nonnative fish, human use of pools for bathing, water extraction, in-flow of fertilizer and pesticides, and collection for the aquarium trade.

- The U.S. Fish and Wildlife Service Recommended Standard Best Management Practices for Work in Aquatic Environments should be incorporated into the project description to minimize the degradation of water quality and impacts to fish and wildlife resources.
- Protect anchialine pools (both in and around) from the following human disturbance:
    - Restrict vehicles to existing roads and trails
    - Prevent trash, and other waste from entering into anchialine pools
    - Avoid or limit to the maximum extent practicable entrance into the anchialine pools
- Install educational signs near anchialine pools to inform people of the presence of sensitive species and habitats.

Biosecurity and Invasive Species

We are attaching our list of Biosecurity Protocols to prevent the introduction and spread of harmful invasive species on the island of Hawaii. We encourage you to incorporate the relevant measures into your project description and all contracts for the construction/maintenance of the project.

If this potential project should receive federal funding, federal permits, or any federal authorization, it will require a Section 7 consultation with the Service. The Service only conducts Section 7 consultations with the federal action agency or their designated representative.

Thank you for participating with us in the protection of our endangered species. If you have any further questions or concerns regarding this consultation, please contact Eldridge Naboa, Fish and Wildlife Biologist, 808-933-6964, e-mail: eldridge_naboa@fws.gov. When referring to this project, please include this reference numbers: ***01EPIF00-2020-TA-0433***.

Sincerely,

Michelle Bogardus
Island Team Manager
Maui Nui and Hawaii Island

Attachments:
Biosecurity Protocols – Hawaii Island
Aquatic Environments – Best Management Practices

BIOSECURTY PROTOCOL – HAWAII ISLAND (JULY 2018)

The following biosecurity protocol (based on National Park Service, State of Hawaii, U.S. Fish and Wildlife, U.S. Geological Survey, and the DOI Office of Native Hawaiian Relations guidance) should be followed when operating on Hawaii Island to prevent the introduction of harmful invasive species including frogs, ants, weeds, and fungi into local natural areas (e.g., Hawaii Volcanoes National Park, Hakalau Forest National Wildlife Refuge, State of Hawaii "Natural Areas") and areas with native habitat (habitat that is primarily composed of native vegetation), other islands in Hawaiian archipelago, or the U.S. mainland. The protocol also includes suggestions for keeping field staff safe from certain invasive species.

1. All work vehicles, machinery, and equipment should be cleaned, inspected by its user, and found free of mud, dirt, debris and invasive species prior to entry into the natural areas or native habitat.

a. Vehicles, machinery, and equipment must be thoroughly pressure washed in a designated cleaning area and visibly free of mud, dirt, plant debris, insects, frogs (including frog eggs) and other vertebrate species such as rats, mice and non-vegetative debris. A hot water wash is preferred. Areas of particular concern include bumpers, grills, hood compartments, areas under the battery, wheel wells, undercarriage, cabs, and truck beds (truck beds with accumulated material (intentionally placed or fallen from trees) are prime sites for hitchhikers).

b. The interior and exterior of vehicles, machinery, and equipment must be free of rubbish and food. The interiors of vehicles and the cabs of machinery must be vacuumed clean. Floor mats shall be sanitized with a solution of >70% isopropyl alcohol or a freshly mixed 10% bleach solution.

c. Any machinery, vehicles, equipment, or other supplies found to be infested with ants (or other invasive species) must not enter natural areas or native habitat. Treatment is the responsibility of the equipment or vehicle owner and operator.

2. Little Fire Ants – All work vehicles, machinery, and equipment should be inspected for invasive ants prior to entering the natural areas or native habitat.

a. A visual inspection for little fire ants should be conducted prior to entry into natural areas or native habitat.

b. Hygiene is paramount but even the cleanest vehicle can pick up a little fire ant. Place MaxForce Complete Brand Granular Insect Bait (1.0% Hydramethylnon; http://littlefireants.com/Maxforce%20Complete.pdf) into refillable tamper resistant bait stations. An example of a commercially available refillable tamper resistant bait station is the Ant Café Pro (https://www.antcafe.com/). Place a bait station (or stations) in vehicle. Note larger vehicles, such as trucks, may require multiple stations. Monitor bait stations frequently (every week at a minimum) and replace bait as needed. If the station does not have a sticker to identify the contents, apply a sticker listing contents to the station.

c. Any machinery, vehicles, equipment, or other supplies found to be infested with ants (or other invasive species) must not enter natural areas or native habitat until it is sanitized and re-tested following a resting period. Infested vehicles must be sanitized following recommendations by the Hawaii Ant Lab (http://www.littlefireants.com/) or other ant control expert and in accordance

with all State and Federal laws. Treatment is the responsibility of the equipment or vehicle owner.

d. Gravel, building materials, or other equipment such as portable buildings should be baited using MaxForce Complete Brand Granular Insect Bait (1.0% Hydramethylnon; http://littlefireants.com/Maxforce%20Complete.pdf) or AmdroPro (0.73% Hydramethylnon; http://littlefireants.com/Amdro%20Pro.pdf) following label guidance.

e. Storage areas that hold field tools, especially tents, tarps, and clothing should be baited using MaxForce Complete Brand Granular Insect Bait (1.0% Hydramethylnon; http://littlefireants.com/Maxforce%20Complete.pdf) or AmdroPro (0.73% Hydramethylnon; http://littlefireants.com/Amdro%20Pro.pdf) following label guidance.

3. Base yards and staging areas inside and outside areas must be kept free of invasive species.
a. Base yards and staging areas should be inspected at least weekly for invasive species and any found invasive removed immediately. Pay particular attention to where vehicles are parked overnight, keeping areas within 10-meters of vehicles free of debris. Parking on pavement and not under trees, while not always practical is best.

b. Project vehicles or equipment stored outside of a base yard or staging area, such as a private residence, should be kept in a pest free area.

4. All cutting tools must be sanitized to prevent the Rapid Ohia Death (ROD) fungus.
a. Avoid wounding ohia trees and roots with mowers, chainsaws, weed eaters, and other tools. Cut only the minimum amount of trees and branches as approved for the project.

b. All cutting tools, including machetes, chainsaws, and loppers must be sanitized to remove visible dirt and other contaminants prior to entry into natural areas or areas with native habitat, and when moving to a new project area within the native habitat area. Tools may be sanitized using a solution of >70% isopropyl alcohol or a freshly mixed 10% bleach solution. One minute after sanitizing, you may apply an oil based lubricant to chainsaw chains or other metallic parts to prevent corrosion.

c. Only dedicated tools and chainsaws should be used to sample known or suspected ROD infected trees.

d. Vehicles, machinery, and equipment must be cleaned as described in (1) above.

5. Imported firewood, logs, and ohia parts:
a. Ohia firewood, ohia logs, and ohia parts should not be transported.

6. For individuals working in the field:
a. **Before going into the field**, visually inspect and clean your clothes, boots, pack, radio harness, tools and other personal gear and equipment, for seeds, soil, plant parts, insects, and other debris. A small brush is handy for cleaning boots, equipment and gear. Soles of shoes should be sanitized using a solution of >70% isopropyl alcohol or a freshly mixed 10% bleach solution.

b. **Immediately before leaving the field,** visually inspect and clean your clothes, boots, pack, radio harness, tools, and other personnel gear and equipment, for seeds, soil, plant parts, insects, and other debris. Soles of shoes should be sanitized using a solution of >70% isopropyl alcohol or a freshly mixed 10% bleach solution.

c. **Little fire ants nest in trees.** If you are under a tree and that tree is bumped or somehow stressed, the threat response of the ants is to fall from the leaves and sting the person under the tree. If you are subject to an ant attack, do not panic. The ants are extremely small but their stings are painful so make sure you remove all ants from your body and clothing. The stings cause inch long welts that are itchy and painful, and can last for weeks. Treat stings as you would other insect stings. In some persons stings can produce life threatening reactions. Stocking antihistamine in the first aid kit is a reasonable precaution.

d. **Rat Lungworm disease** is caused by a parasite that can infect humans who consume raw or undercooked infected snails or slugs or consume raw produce that contains a small infected snail or slug. Infection is rare but can be serious. Symptoms can include severe headache, neck stiffness, low grade fever, nausea, and vomiting anywhere from 1-6 weeks after exposure. The disease is not spread person to person. Anyone who handles snails or slugs should wear gloves and/or wash hands. Eating unwashed produce is discouraged.

U.S. Fish and Wildlife Service
Recommended Standard Best Management Practices

The U.S. Fish and Wildlife Service (USFWS) recommends the following measures to be incorporated into project planning to avoid or minimize impacts to fish and wildlife resources. Best Management Practices (BMPs) include the incorporation of procedures or materials that may be used to reduce either direct or indirect negative impacts to aquatic habitats that result from project construction-related activities. These BMPs are recommended in addition to, and do not over-ride any terms, conditions, or other recommendations prepared by the USFWS, other federal, state or local agencies. If you have questions concerning these BMPs, please contact the USFWS Aquatic Ecosystems Conservation Program at 808-792-9400.

1. Authorized dredging and filling-related activities that may result in the temporary or permanent loss of aquatic habitats should be designed to avoid indirect, negative impacts to aquatic habitats beyond the planned project area.

2. Dredging/filling in the marine environment should be scheduled to avoid coral spawning and recruitment periods, and sea turtle nesting and hatching periods. Because these periods are variable throughout the Pacific islands, we recommend contacting the relevant local, state, or federal fish and wildlife resource agency for site specific guidance.

3. Turbidity and siltation from project-related work should be minimized and contained within the project area by silt containment devices and curtailing work during flooding or adverse tidal and weather conditions. BMPs should be maintained for the life of the construction period until turbidity and siltation within the project area is stabilized. All project construction-related debris and sediment containment devices should be removed and disposed of at an approved site.

4. All project construction-related materials and equipment (dredges, vessels, backhoes, silt curtains, etc.) to be placed in an aquatic environment should be inspected for pollutants including, but not limited to; marine fouling organisms, grease, oil, etc., and cleaned to remove pollutants prior to use. Project related activities should not result in any debris disposal, non-native species introductions, or attraction of non-native pests to the affected or adjacent aquatic or terrestrial habitats. Implementing both a litter-control plan and a Hazard Analysis and Critical Control Point plan (HACCP – see http://www.haccp-nrm.org/Wizard/default.asp) can help to prevent attraction and introduction of non-native species.

5. Project construction-related materials (fill, revetment rock, pipe, etc.) should not be stockpiled in, or in close proximity to aquatic habitats and should be protected from erosion (*e.g.*, with filter fabric, etc.), to prevent materials from being carried into waters by wind, rain, or high surf.

6. Fueling of project-related vehicles and equipment should take place away from the aquatic environment and a contingency plan to control petroleum products accidentally spilled during the project should be developed. The plan should be retained on site with the person responsible for compliance with the plan. Absorbent pads and containment booms should be stored on-site to facilitate the clean-up of accidental petroleum releases.

7. All deliberately exposed soil or under-layer materials used in the project near water should be protected from erosion and stabilized as soon as possible with geotextile, filter fabric or native or non-invasive vegetation matting, hydro-seeding, etc.

Standard Comments for Land Use Reviews
Clean Air Branch
Hawaii State Department of Health

If your proposed project:

Requires an Air Pollution Control Permit

You must obtain an air pollution control permit from the Clean Air Branch and comply with all applicable conditions and requirements. If you do not know if you need an air pollution control permit, please contact the Permitting Section of the Clean Air Branch.

s

Includes construction or demolition activities that involve asbestos

You must contact the Asbestos Abatement Office in the Indoor and Radiological Health Branch.

Has the potential to generate fugitive dust

You must control the generation of all airborne, visible fugitive dust. Note that construction activities that occur near to existing residences, business, public areas and major thoroughfares exacerbate potential dust concerns. It is recommended that a dust control management plan be developed which identifies and mitigates all activities that may generate airborne, visible fugitive dust. The plan, which does *not* require Department of Health approval, should help you recognize and minimize potential airborne, visible fugitive dust problems.

Construction activities must comply with the provisions of Hawaii Administrative Rules, §11-60.1-33 on Fugitive Dust. In addition, for cases involving mixed land use, we strongly recommend that buffer zones be established, wherever possible, in order to alleviate potential nuisance complaints.

You should provide reasonable measures to control airborne, visible fugitive dust from the road areas and during the various phases of construction. These measures include, but are not limited to, the following:

a) Planning the different phases of construction, focusing on minimizing the amount of airborne, visible fugitive dust-generating materials and activities, centralizing on-site vehicular traffic routes, and locating potential dust-generating equipment in areas of the least impact;
b) Providing an adequate water source at the site prior to start-up of construction activities;
c) Landscaping and providing rapid covering of bare areas, including slopes, starting from the initial grading phase;
d) Minimizing airborne, visible fugitive dust from shoulders and access roads;
e) Providing reasonable dust control measures during weekends, after hours, and prior to daily start-up of construction activities; and
f) Controlling airborne, visible fugitive dust from debris being hauled away from the project site.

If you have questions about fugitive dust, please contact the Enforcement Section of the Clean Air Branch

Clean Air Branch (808) 586-4200 cab@doh.hawaii.gov	Indoor Radiological Health Branch (808) 586-4700

Letter SA3

DAVID Y. IGE
GOVERNOR

JADE T. BUTAY
DIRECTOR

Deputy Directors
LYNN A.S. ARAKI-REGAN
DEREK J. CHOW
ROSS M. HIGASHI
EDWIN H. SNIFFEN

STATE OF HAWAII
DEPARTMENT OF TRANSPORTATION
869 PUNCHBOWL STREET
HONOLULU, HAWAII 96813-5097

IN REPLY REFER TO:
DIR 0756
STP 8.3001

August 19, 2020

Mr. William F. Bow, M.S.
Environmental Director
Bow Engineering & Development, Inc.
1953 S. Beretania Street, PH-A
Honolulu, Hawaii 96826

Dear Mr. Bow:

Subject: Draft Environmental Assessment (DEA)
Chapter 343, Hawaii Revised Statutes
Milolii Beach Park Accessibility Improvements
South Kona, Hawaii
Tax Map Key: (3) 8-9-004:001

The Hawaii Department of Transportation (HDOT) has reviewed the subject DEA and understands the County of Hawaii, Department of Parks and Recreation is proposing to improve the Milolii Beach Park buildings and amenities to comply with current Americans with Disabilities Act (ADA) guidelines.

Based on the project description and location, it appears the project will have no significant impacts to State highway facilities; therefore, HDOT has no comments.

If there are any questions, please contact Mr. Blayne Nikaido of the HDOT Statewide Transportation Planning Office at (808) 831-7979 or via email at blayne.h.nikaido@hawaii.gov.

Sincerely,

JADE T. BUTAY
Director of Transportation

Letter SA4

Hawai‘i State Legislature

September 3, 2020

Mr. Jeffrey Ochi
Department of Parks and Recreation, County of Hawai‘i
101 Pauahi St., Suite 6
Hilo, Hawai‘i 96720

Re: Miloli‘i Beach Park Accessibility Improvement Project

Dear Mr. Ochi,

In light of the recent outbreak of COVID-19 in the Miloli‘i Fishing Village in South Kona, We strongly urge the Department of Parks and Recreation to extend or postpone the September 8, 2020 deadline to submit comments on the Miloli‘i Beach Park Accessibility Improvement Project, so that the community can focus on the health crisis they are currently facing.

We also want to convey our concerns regarding community engagement for this project. Two community meetings were held and a third was also to be scheduled but was never done. Therefore, there are many unanswered questions remaining that should be addressed.

This community is currently dealing with a COVID-19 outbreak and with the added burden of the looming deadline for comments on the proposed project and EA, it is adding to the emotional stress in this community. As you are aware, COVID-19 has greatly impacted all aspects of our lives and this request to extend or postpone the upcoming September 8, 2020 deadline for comments, is not an unreasonable request. Our suggestion would be to delay the comment period two months to November 8, 2020. If you have any questions, please feel free to contact me at 808-586-6760 or senkkahele@capitol.hawaii.gov.

Sincerely,

Senator Kaiali‘i Kahele
Senator Dru Mamo Kanuha
Representative Richard P. Creagan

cc: Roxcie Waltjen, Director, Department of Parks and Recreation, County of Hawai‘i
Korey Johnson, Consultant, Bow Engineering and Development, Inc.
Keith Kawaoka, Acting Director, Department of Health, Office of Environmental Quality Control
Suzanne Case, Chair, Department of Land and Natural Resources

Letter SA5

Hawai'i State Legislature

November 9, 2020

Mr. Jeffrey Ochi
Department of Parks and Recreation, County of Hawai'i
101 Pauahi St., Suite 6
Hilo, Hawai'i 96720

Re: Miloli'i Beach Park Accessibility Improvement Project,
Republished Draft Environmental Assessment (AFNSI)

Dear Mr. Ochi,

I would like to convey the following concerns regarding the Miloli'i Beach Park Accessibility Improvement Project-Republished Draft Environmental Assessment (EA) (AFNSI). As you are aware, there were two community meetings held, but since the third was never scheduled, there remains many unanswered questions that should be addressed. Unfortunately, they have not been adequately addressed in the current Draft EA.

1. It is not clear from the language in the Draft EA whether a Conservation District Use Permit (CDUP) will be required or not. Where required to list other required permits and approvals, the Draft EA only lists "numerous." In the project summary, despite identifying that the project takes place within a conservation district, the report fails to acknowledge that a CDUP will be required. In the consultation letter received from the Office of Conservation and Coastal Lands, OCCL notes that a Site Plan Approval application is required. **SA5-A**

2. Additionally, in the Project Summary, the report states that the "use of state lands and state funds; use of conservation district" serve as the HRS §343 trigger. Therefore, should the final approving agency be the Board of Land and Natural Resources (BLNR)? **SA5-B**

3. The consultation letter from the U.S. Army Corps of Engineer, Honolulu District also questions whether or not there is a federal nexus on this project. I also request clarification as to whether or not this project will require a Department of the Army authorization. **SA5-C**

4. An archaeological inventory survey was performed, but it appears from the AIS that there was no prior consultation on the AIS testing strategy with the State Historic Preservation Division as required under the HAR and there was no consultation with the area practitioners who consider the sites identified significant. I and the community feel the **SA5-D**

proposed development could have severe impacts to the terrain and the sub surface terrain. We do not know if there are any archaeological sites at the beach park location (burials) etc., and an additional investigation and proper consultation would have resolved this issue.

5. The State and County of Hawai‘i (COH) are obligated to identify traditional and customary practices in the area and identify potential impacts to those activities. This is entirely absent from the current Draft EA. **SA5-E**

6. On page 1 (1.1) it is stated that the COH is improving the Miloli‘i Beach Park to "increase recreational access for visitors to the beach park." However, every family I have talked to in Miloli‘i does not want increased access for visitors. The beach park already experiences a high amount of visitors that come to the park and leave their cars to walk to Honomalino Bay. Has the COH done a traffic study? What is it doing to improve road access and safety with the increase in vehicles. There is a limited amount of space at the Miloli‘i Beach Park and increasing visitor access should not be a priority. **SA5-F**

7. The current pavilion is unpermitted but the COH (under former County Councilwoman Keiko Bonk) provided the funding to build the pavilion and allowed the pavilion to be built without a permit. Many kūpuna and members of the community built the pavilion with hard work and sweat equity. What the COH should do is make improvements to the existing structure and utilize the "as built" permit process. Not tear down the existing pavilion. **SA5-G**

8. The proposed improvements will dramatically alter the existing character of the Miloli‘i Beach Park, not maintain it. **SA5-H**

9. On page 2, 1.3 - "The proposed action would use state funding." What was the amount of State funding allocated for this project? In what legislative session was this funding appropriated? Is this capital improvement project (CIP) funding appropriated to the COH Parks and Recreation? Please provide more details on the State funding source. If State funding is being used, I would strongly encourage an Environmental Impact Statement (EIS) be performed. **SA5-I**

10. On page 48, the Draft EA states that there was "overall positive feedback from the community." This is not an accurate statement. I spoke to many families in Miloli‘i Village the last few weeks and many do not support the full renovation being proposed. Almost all did agree that limited improvements need to happen to the bathrooms and pavilion to bring the facilities up to County code standards and that ADA compliance is necessary, but not at the expense that is being currently proposed. **SA5-J**

11. Only two meetings were held in Miloli‘i for community input. The first had very little community notice and as a result only 9 attended. The second meeting had a much larger turnout but that was still not enough community input. A third meeting was also promised but never materialized. Rather than coming to Miloli‘i to tell the community **SA5-K**

what the COH is proposing to do, the COH should work with the community and ask them for their thoughts on what should be done at the Miloli‘i Beach Park.

12. Fishermen have expressed their concerns with the lack of room to turn their boats around. More consultation needs to happen with the active fishermen of Miloli‘i around the design of the beach park and the turn around radius and requirements needed for the various sizes of boats that launch from the Miloli‘i boat ramp. **SA5-L**

I strongly feel that this project requires an EIS to fully identify all the potential impacts. I urge you to revise and resubmit this assessment through the EIS process, identifying the proper accepting authority and resolving the issues identified above. It should be anticipated that if this inadequate assessment proceeds to a FEA/FONSI, it may be challenged pursuant to applicable laws and regulations. **SA5-M**

If you have any questions, please feel free to contact me at senkkahele@capitol.hawaii.gov or 808-586-6760.

Me ka ha‘aha‘a,

Kaiali‘i Kahele
Senate District 1 – Hilo

cc: Roxcie Waltjen, Director, Department of Parks and Recreation, County of Hawai‘i
Korey Johnson, Consultant, Bow Engineering and Development, Inc.
Keith Kawaoka, Acting Director, Department of Health, Office of Environmental Quality Control
Suzanne Case, Chair, Department of Land and Natural Resources
Samuel J. Lemmo, Administrator, Office of Conservation and Coastal Lands

From: Kamakana Ferreira <kamakanaf@oha.org>
Sent: Monday, November 9, 2020 2:37 PM
To: jeffrey.ochi@hawaiicounty.gov
Cc: Korey Johnson
Subject: OHA Comments Re: DEA Miloli'i Beach Park ADA Improvements Project

Aloha Mr. Ochi,

Below are comments from the Office of Hawaiian Affairs (OHA) regarding the July 2020 draft environmental assessment (DEA) for the proposed Miloliʻi Beach Park Accessibility Improvement Project in South Kona, Hawaiʻi Island, recently released for public comment on October 8. Bow Engineering & Development, Inc., has prepared the DEA on behalf of the County of Hawaiʻi, Department of Parks and Recreation (DPR), pursuant to Hawaiʻi Revised Statutes (HRS) 343. The proposed action will mostly include improvements to the existing Miloliʻi Beach Park buildings and amenities to comply with current Americans with Disabilities Act (ADA) guidelines. Non-ADA improvements will further include: restructuring and resurfacing of the basketball/volleyball court; designation of a boat turnaround area; and, the installation of vehicular barriers to prevent unauthorized vehicles from accessing the shoreline.

OHA's comments pertain to HRS 6E (historic preservation review) compliance and cultural resources. These comments will also be provided in a formal letter.

HRS 6E Compliance

While the DEA indicates that an archaeological inventory survey (AIS) report was completed for this project in 2019, the AIS included in the DEA as Appendix B is labeled as a "draft" and language within the DEA seems to imply that consultation with the State Historic Preservation Division (SHPD) is not yet complete. The DEA simply states, "SHPD consultation has been initiated." Thus, it appears SHPD has not actually reviewed the AIS for compliance with the existing rules pursuant to HRS 6E and that the historic preservation review process is still on-going. Notably, the AIS appears to be missing a few required items: 1) a map showing the areal extent of prior archaeological work in the area as required by HAR 13-276-5(c)(2)(A);[1] and, 2) a plan view map for each identified historic property as required by HAR 13-276-5(d)(4)(F).[2] Also, it is concerning and misleading that the DEA indicates limited subsurface testing was done while the AIS says that no subsurface testing occurred. **SA6-A**

Furthermore, there seems to be limited and outdated information regarding the subsurface soil composition in the AIS report. The AIS cites a 1973 soil survey as reason to conclude the "soil in the project area is comprised of rough broken land," and characterized by "20 to 60+ inches of undefined soils". Yet, the DEA section on geology, which references a 2018 soil report by the U.S. Department of Agriculture, indicates the soils in Miloliʻi are classified as "Punaluu-Lava flows complex" with "organic material over Pahoehoe". If the subsurface composition is unknown, subsurface testing may in fact be

[1] The AIS indicates "Figure 13" is a map showing the extent of prior archaeological studies; however, Figure 13 contains a photograph of Hauʻoli Kamanaʻo Church. The referenced areal map could not be find in any other figures throughout the document.

[2] The AIS does include a singular locational map of the three identified sites in Figure 25 that was provided by Bow Engineering & Development, Inc.. However, the rules require a plan view map for each identified site to be generated by (or under the supervision of) a qualified archaeologist and a description of the methods used to generate the map. It is unclear if Bow Engineering & Development, Inc., has qualified archaeological staff to generate the plan view map and there is no explanation detailing how the map was made.

warranted and recommended by SHPD. Concerning to OHA in this regard is that the AIS mentions burials just north of the project area at the "old aʻa flow" over former Hoʻopuloa Village and there is no comparative discussion on subsurface characteristics to help determine a likelihood of encountering more burials. Commonly, burials are often found in shoreline areas and lava tubes on Hawaiʻi Island. Without further explanation, subsurface testing may be the only means to better understand the subsurface domain. This point further stresses the importance of needing SHPD comment, as they could conclude subsurface testing is in fact needed in this case.

Procedurally, OHA maintains that completing the HRS 6E review after the DEA robs the HRS 343 process of the intent to fully consider environmental impacts and contradicts what is required by Hawaiʻi Administrative Rules (HAR) 11-200.1. The intent of HRS Chapter 343 is to ensure a project's impact to the environment is fully considered in the planning process and to integrate mitigation where needed to minimize significant environmental harm. HAR 11-200.1-18(d)(8) requires that proposed mitigations be included within the DEA. In determining whether historic properties will be adversely impacted, the HRS 6E review process is essential to identifying sites and generating mitigation commitments in consultation with SHPD. Typically, any resulting mitigations made during the HRS 6E review process are included in the DEA.

If recommended mitigations or additional testing work is requested by SHPD at a later time, the DEA cannot possibly be complete as required by the HARs. OHA thus questions the completeness of the DEA and the FONSI determination. Deferring the HRS 6E review process at this point hides possible adverse impacts and mitigations from being included in the DEA, thus skewing the FONSI determination and limiting the public's chance to comment. The precedence set by this decision would go against the way DEA's are typically done in the State of Hawaiʻi and potentially encourage other projects to do HRS 6E reviews after a DEA is complete. OHA cannot support this course action.

Cultural Resources

In review of the DEA, it appears that there has been no dedicated cultural impact assessment (CIA) performed for this project. The only reference to cultural practices within the DEA is under the "consultation" sub-section within Section 3.5. Here, it states that oral history interviews were conducted in 2003 for a different project in Miloliʻi to better understand traditional fishing practices of the region. While the results indicated a decline in the abundance of fish and overall fishery quality, the DEA states there is no specific information regarding the project site. Suggested mitigations, which included designating Sunday as no fishing days to aid in fish population recovery and limiting the use of "foreign baits," were provided in the AIS. However, the DEA makes no mention of these suggested mitigations and concludes that the exercise of traditional Native Hawaiian rights and customary activities will not be affected. **SA6-B**

Members of the Kaupiko ʻohana and other beneficiaries from the area have reported to OHA that they do have concerns about how improvements will affect fisherman that use the area and potential overcrowding of the area that could affect familial and cultural practitioner access. While these beneficiaries reported that there was a community meeting hosted by DPR to discuss the project earlier this year, they feel their concerns regarding project impacts to cultural practices and access were ignored. They have further expressed that they were not specifically consulted about cultural practices occurring in the area and there was never any follow up to the concerns they raised.

OHA believes the age of the prior consultation work done in 2003 and the targeted subject matter is not adequate to assess impacts to cultural resources. More importunately, there is no CIA to accompany the DEA as required by Act 50, Session Laws of Hawaiʻi 2000, for any environmental assessment in the State of Hawaiʻi. While recent amendments to the HARs that govern environmental rules do allow for prior analyses that were included in prior DEAs to be used again in different projects,[3] the oral history study from 2003 is not a CIA. Furthermore, a lot could have changed in the 18 years since the study. As evident in the expressed concerns of our beneficiaries, there are clearly individuals and ʻohana that believe cultural practices are occurring. Guidelines for assessing cultural impacts are provided by the Office of Environmental Quality Control (OEQC) in the *Guide to Implementation and Practice of the Hawaii Environmental Policy Act*, Exhibit 1-1, 2012 Edition. We encourage DPR to complete a CIA that is compliant with these guidelines and minimally reach out to the Kaupiko ʻohana and other individuals they recommend.

OHA would further like to remind the DPR that as a County agency, DPR has a responsibility to reasonably protect traditional and customary Native Hawaiian rights as required by Articles IX and XII of the State of Hawaiʻi Constitution. Article XII Section 7 of the State of Hawaiʻi Constitution states:

> "the State reaffirms and shall protect all rights, customarily and traditionally exercised for subsistence, cultural and religious purposes and possessed by ahupuaʻa tenants who are descendants of native Hawaiians who inhabited the Hawaiian Islands prior to 1778…"

In *Ka Paʻakai O Ka ʻAina v. Land Use Commission*, 94 Haw. 31 (2000), hereinafter Ka Paʻakai, the Hawaiʻi Supreme Court, reiterated the importance of Section 7 and reaffirmed that the State and its agencies, inclusive of the Counties, are obligated to reasonably protect the traditional and customary rights of Hawaiians.

The Ka Paʻakai court decision set forth that a proper analysis of cultural impacts shall include: 1) the identity and scope of valued cultural, historical, or natural resources in the subject area, including the extent to which traditional and customary native Hawaiian rights are exercised; 2) the extent to which those resources – including traditional and customary native Hawaiian rights – will be affected or impaired by the proposed action; and, 3) the feasible action, if any, to be taken by the (agency) to reasonably protect native Hawaiian rights if they are found to exist. While the construct for CIAs have often been used to satisfy these Ka Paʻakai requirements, there is no dedicated CIA for this particular project and no means to justify that the DPR has adequately assessed the occurrence of traditional and customary Native Hawaiian practices.

Closing Remarks

Mahalo for the opportunity to comment. OHA looks forward to seeing our comments pertaining to HRS 6E compliance and cultural resources addressed. More importantly, we hope the voices of Native Hawaiians are heard and identified cultural practices are protected. Miloliʻi is an important cultural kīpuka and one of the last vestiges of an important Hawaiian cultural landscape and native tenant system that requires the utmost consideration and protection as urban sprawl continues to threaten these important cultural communities. Should you have any questions, please contact OHA's Lead Compliance Specialist, Kamakana C. Ferreira at (808) 594-0227 or by email at kamakanaf@oha.org.

---

[3] See HAR 11-200.1-12, Consideration of previous determinations and accepted statements.

Mahalo,

Kamakana C. Ferreira, M.A.
Lead Compliance Specialist
Office of Hawaiian Affairs
560 N. Nimitz Hwy
Honolulu, Hi. 96817

(808)594-0227

Letter IND1

Shirley Casuga

November 9th, 2020

Mr. Jeffrey Ochi
Department of Parks and Recreation, County of Hawai‘i
101 Pauahi St., Suite 6
Hilo, Hawai‘i 96720

Re: Miloli‘i Beach Park Accessibility Improvement Project

Dear Mr. Ochi,

I would like to submit the following comments regarding the Miloli‘i Beach Park Accessibility Improvement Project - Republished Draft EA (AFNSI).

I oppose the Draft EA submitted by the Department of Parks and Recreation, County of Hawaii. I would like to suggest that the park be left alone. One of the main reasons I oppose the renovations is because it will increase my land taxes. I currently pay $900.00 every six months, $1,800.00 every year. Another request is that I am also asking is for less camping permits in the park. The upgrades that are being suggested is still not intended for our community, the park will be upgraded for the tourist and visitors. I would like to suggest that the Park and Recreation work with the community to upgrade the halau/pavilion. The park ADA upgrades need to be discussed and planed with our community. Finally, the bathrooms should have sufficient stalls to accommodate our community.

IND1-A
IND1-B
IND1-C
IND1-D

If you have any questions, please feel free to contact me at 808.937.7073 or 808.328.9780

Sincerely,

Shirley Casuga

cc: Korey Johnson, Consultant, Bow Engineering and Development, Inc.

The Environmental Notice dated October 8, 2020 at page 3:
http://oeqc2.doh.hawaii.gov/The_Environmental_Notice/2020-10-08-TEN.pdf

Letter IND2

Ben and Darlene Casuga

Mr. Jeffrey Ochi
Department of Parks and Recreation, County of Hawai‘i
101 Pauahi St., Suite 6
Hilo, Hawai‘i 96720

Re: Miloli‘i Beach Park Accessibility Improvement Project

Dear Mr. Ochi,

I would like to submit the following comments regarding the Miloli‘i Beach Park Accessibility Improvement Project - Republished Draft EA (AFNSI).

I oppose the Draft EA submitted by the Department of Parks and Recreation, County of Hawaii. **IND2-A**
I would like to suggest that the park be left alone and more so changing the overall landscape
with lose the true intent of the park. Another request is that I am also asking for less camping **IND2-B**
permits in the park. The upgrades that are being suggested is not intended for our community, the
park will be upgraded for the outsiders which include tourist and visitors. I would like to suggest
that Parks and Recreation work with the community to upgrade the pavilion, with the draft EA **IND2-C**
the park will attract more people and it will have an adverse reaction to this traditional place. We **IND2-A**
suggest that your officers continue to talk to our families as you continue this process.

If you have any questions, please feel free to contact me at 808.345.6452 or 808.756.0288

Sincerely,

Ben and Darlene Casuga

cc: Korey Johnson, Consultant, Bow Engineering and Development, Inc.

Letter IND3

Ka'imi N. Kaupiko
89-1831 Milolii Rd.
Captain Cook, HI 96704

November 3, 2020

Mr. Jeffrey Ochi
Department of Parks and Recreation, County of Hawai'i
101 Pauahi St., Suite 6
Hilo, Hawai'i 96720

Re: Miloli'i Beach Park Accessibility Improvement Project

Dear Mr. Ochi,

I would like to submit the following comments regarding the Miloli'i Beach Park Accessibility Improvement Project - Republished Draft EA (AFNSI).

I am opposed to the Draft Environmental Assessment that was completed. I am a resident of Milolii and attended two community meetings held by you and the Department of Park and Recreation. I am opposed because some of our comments and concerns were not addressed after those meetings. A few of the concerns I want to discuss today is in regards to the main Pavilion, the camping permits, the parking lot and bathrooms. I did not hear back from you regarding our community meeting a few months and I am worried that what is written in your Draft EA is not the full intent of many of our community members.

In our meetings we expressed that we wanted the Miloli'i park to stay as authentic as possible with minimum upgrades to comply with the American with Disability Act. However, we realized that you did not listen to some of our concern. The first concern I want to bring up is the exiting park pavilion. We were hoping you could renovate the current pavilion but according to your proposal you will build a new building. My concern is that the moving of the building will cause a problem for the many fisherman who need to turn around at the park. I would suggest we need a bigger turnaround then the one proposed. Second, I want to ask about the camping permits, many of the villagers raised concerned that the visitor's camping needs to be reduced to less permits, your current proposal asks for 50 permits. I suggest 10-15 permits maximum. Third I am worried that the parking lot will need more stalls to accommodate our families and the amount of spaces might cause a congestion with the current flow of residents and visitors. Finally, I would like to make it clear that the intent of these upgrades beyond complying to make it ADA accessible, is that the park serves the needs of its residents and not visitors.

IND3-A

IND3-B

IND3-C

IND3-D

On a positive note, I am content that you considered to leave the bathrooms in its current location, but I would like to know if the leech fields and other issues with the septic is addressed so there will be no pollution as well as the bathroom stalls, I am hoping to have at least two stalls in each bathroom. I am also supportive of the resurfacing of the basketball/volleyball court. However, I am hoping we can suggest that the court be more user friendly to the needs of the youths. A multi-use facility that has indoor and outdoor features. Since you are taking down a few ironwood trees we are hoping that you consider creating shade for the court as well as the playground facility.

IND3-E

IND3-F

IND3-G

IND3-H

If you have any questions, please feel free to contact me at 808.937.1310 or kkaupiko@gmail.com

Sincerely,

Ka'imi N. Kaupiko

cc: Korey Johnson, Consultant, Bow Engineering and Development, Inc.

Letter IND4

Ka'imi N. Kaupiko
89-1831 Milolii Rd.
Captain Cook, HI 96704

November 3, 2020

Mr. Jeffrey Ochi
Department of Parks and Recreation, County of Hawai‘i
101 Pauahi St., Suite 6
Hilo, Hawai‘i 96720

Re: Miloli‘i Beach Park Accessibility Improvement Project

Dear Mr. Ochi,

I would like to submit the following comments regarding the Miloli‘i Beach Park Accessibility Improvement Project - Republished Draft EA (AFNSI).

I am opposed to the Draft Environmental Assessment that was completed. I am a resident of Milolii and attended two community meetings held by you and the Department of Park and Recreation. I am opposed because some of our comments and concerns were not addressed after those meetings. A few of the concerns I want to discuss today is in regards to the main Pavilion, the camping permits, the parking lot and bathrooms. I did not hear back from you regarding our community meeting a few months and I am worried that what is written in your Draft EA is not the full intent of many of our community members.

In our meetings we expressed that we wanted the Miloli'i park to stay as authentic as possible with minimum upgrades to comply with the American with Disability Act. However, we realized that you did listen to some of our concern. The first concern I want to bring up is the exiting park pavilion. We were hoping you could renovate the current pavilion but according to your proposal you will build a new building. My concern is that the moving of the building will cause a problem for the many fisherman who need to turn around at the park. I would suggest we need a bigger turnaround then the one proposed. Second, I want to ask about the camping permits, many of the villagers raised concerned that the visitor's camping needs to be reduced to less permits, your current proposal asks for 50 permits. I suggest 10-15 permits maximum. Third I am worried that the parking lot will need more stalls to accommodate our families and the amount of spaces might cause a congestion with the current flow of residents and visitors. Finally, I would like to make it clear that the intent of these upgrades beyond complying to make it ADA accessible, is that the park serves the needs of its residents and not visitors.

On a positive note, I am content that you considered to leave the bathrooms in its current location, but I would like to know if the leech fields and other issues with the septic is addressed so there will be no pollution as well as the bathroom stalls, I am hoping to have at least two stalls in each bathroom. I am also supportive of the resurfacing of the basketball/volleyball court. However, I am hoping we can suggest that the court be more user friendly to the needs of the youths. A multi-use facility that has indoor and outdoor features. Since you are taking down a few ironwood trees we are hoping that you consider creating shade for the court as well as the playground facility.

If you have any questions, please feel free to contact me at 808.937.1310 or kkaupiko@gmail.com

Sincerely,

Ka'imi N. Kaupiko

cc: Korey Johnson, Consultant, Bow Engineering and Development, Inc.

Letter IND5

Wilfred Kaupiko
89-1196 Mamalahoa Hwy.
Captain Cook, HI 96704

Mr. Jeffrey Ochi
Department of Parks and Recreation, County of Hawai‘i
101 Pauahi St., Suite 6
Hilo, Hawai‘i 96720

Re: Miloli‘i Beach Park Accessibility Improvement Project

Dear Mr. Ochi,

I would like to submit the following comments regarding the Miloli‘i Beach Park Accessibility Improvement Project - Republished Draft EA (AFNSI).

I am currently opposed to the Draft EA submitted by the Department of Parks and Recreation, County of Hawaii. I would like to suggest that the park and recreation continues to communicate with the community to mitigate any differences or concerns regarding these ADA upgrades. The outreaches conducted by the Park and Recreation was not fully supported as noted in the Draft EA. One of the main reasons I oppose the renovation is that it will not adhere to the true intent of the village. Milolii is known throughout Hawaii as a traditional fishing village, one that continued to honor the ways of our past and preserve it for the future. I am also asking that a Cultural Impact Statement take place to honor our traditional ways. The upgrades that are being suggested is still not intended for our community, the park will be upgraded for the tourist and visitors as noted in your Draft EA. The upgrades or renovations should first honor the community who uses and occupies the space. I also would like to suggest that the Park and Recreation work with the community to upgrade the halau/pavilion versus move ahead with the plans as presented in the Draft EA. Finally, the park ADA upgrades need to be discussed and planed with fully with our community. With that, I submit this testimony opposing the current draft EA until these concerns and differences between the county Parks and Recreation be discussed and mitigated,

IND5-A

IND5-B

IND5-C

IND5-B

IND5-A

If you have any questions, please feel free to contact me at 808.896.6272 or hawaiianrolloffservices@gmail.com

Sincerely,

Wilfred Kaupiko

cc: Korey Johnson, Consultant, Bow Engineering and Development, Inc.

Letter IND6

Leillynne Kaupu
89-1767 Miloli'i Road
Captain Cook, HI. 96704

November 8, 2020

Mr. Jeffrey Ochi
Department of Parks and Recreation, County of Hawai‘i
101 Pauahi St., Suite 6
Hilo, Hawai‘i 96720

Re: Miloli‘i Beach Park Accessibility Improvement Project

Dear Mr. Ochi,

I would like to submit the following comments regarding the Miloli‘i Beach Park Accessibility Improvement Project - Republished Draft EA (AFNSI).

First off I want to mention, I attended one of the 2 meetings that took place in the village, only because I didn't find out till after your first meeting that the County had plans to renovate our park. So lack of communication falls on you folks first of all.

I, and like a lot of the ohana here in the village, come from a line of generational fishermans that were born and bred from Miloli'i. Till today I continue to carry this tradition and teach this way of life to my child. I, Leillynne Kaupu, oppose the Miloli'i Beach Park Accessibility Improvements Project and for a few reasons. Let me explain,

.

1. According to your DEA page 48 Section 6.1 Early Consultation Line 20 it mentions "There was overall positive feedback from the community." This I am going to disagree with. I was at that meeting and yes there was feedback, but not so much positive feedback. I believe it was our kupuna and most of the members that attended that Nov 3rd meeting, said to the 2 reps to "leave the pavilion alone. Just leave things alone." **IND6-A**
    a. With less than a month between the 2 meetings, preparations were less than adequate. Communication throughout the community from the County was lacking.
    b. From this November 3rd meeting we were promised another meeting from the reps but never got one. Instead a public notice went out stating the new Republished DEA without another community meeting. Now we only have this time to send in comments.

2. We already have limited space for our community, our canoe paddling communities, fishermans from near and far, buses that pick our keiki up for school, and large water trucks that haul water to the residence and the parks water storage. The moving of the pavilion closer to the center and additional parking stalls will minimize this space for trucks and trailers to turn their boats around. We are also a paddling community, and the trailers for canoes are larger and longer than boat trailers. At the November 3rd meeting we even had ohana come down with their trucks and trailers to show your reps what we are talking about. **IND6-B**

3. As for your proposed plans for allowing 50 camping permits, I am going to have to disagree and ask you folks to not allow that to happen. At the 2nd meeting the community and myself expressed that allowing 28-50 camping permitted space is way too much. At **IND6-C**

this meeting we also mentioned that we would consider only having 8-10 (max 15) permits allowed. Also take into consideration that the new placement of the pavilion and additional parking stalls will not allow space for up to 50 camping permits. If the space the pavilion is currently in, is to provide the space for these permits I do not agree with it. If the building needs to be pushed back due to coastal code regulations then this area should NOT be permitted for camping.

4. Is the comfort station staying as is? The demolishing and rebuilding of the comfort station draws concerns. In this proposal you are wanting to limit the gender rooms to only 1 stall. Why, when we currently have 2 stalls for each womens and mens, THIS I DO NOT AGREE WITH IT. How is only having 1 stall per bathroom ADA certified? **IND6-D**
    a. What type of maintenance is being done to take care and make sure the septic system and the leach field is not leaking or contaminating the grounds and surrounding waters? Are these systems contaminating our waters surrounding the park where our keiki's swim and play? This information the community deserves to know and have on hand.
    b. Also take into consideration that the private property on the south end of the park also has a loko i'a or a nursery for fish. Has there been any testing done to find the results of contaminants leaking into our waters? Before demolishing and rebuilding the comfort station elsewhere, what precautionary matters are you folks considering so as not to harm the environment more than it already is?

5. Page 25 Section 3.9 Social and Economic Characteristic Lines 14-16 it states "The Pa'a Pono Miloli'i website estimates that the village of Miloli'i has about 200 residents (Pa'a Pono 2017)" This number has been multiplying through the years and needs an update. Also know that these numbers are of the original descendants of the relocated families from the 1926 lava flow and not of the neighboring communities. Which the population of the surrounding community will have multiplied by 1000 to this date. You could have come and made yourself known if you folks only came out into the community to gather these information yourself instead of going through information dated back in 2017. It's 2020 now and by the time you folks are done with any of this it will be 2022 with an even larger population count. **IND6-E**

6. Page 27 Section 3.11 Traffic and Parking Lines 2 & 3 last sentence in paragraph states "The project also includes installation of vehicular barriers to prevent unauthorized vehicles from accessing the shoreline and the pavilion." My question is what kind of barriers will you place and where? There is a house in the ka'u corner of the park that families will need access to. To place a pathway or even a barrier in the ka'u corner of the park will draw concerns to the community and the ohana of the house. Please reconsider your barriers. **IND6-F**

7. Positive note, I agree with the resurfacing of the court. Even the possibility of making it an indoor/outdoor court with solar lighting. Lighting that will not harm us or the animals surrounding the area, and will not pollute our beautiful night skies. We do have keiki workshops down there where we teach them of the night skies constellations, moon phases, and traditional navigation. So too much lighting is not wanted. **IND6-G** **IND6-H**

8. I also like the idea of the playground facilities, but if you cut down the trees, what will shade this area? What will protect the playground facilities from flying balls out of the court area? Will you be rebuilding the fence line and make it taller to keep the kids in the playground area safe? **IND6-I**

a. In my youth we had a playground of which was removed and not properly disposed of but just dumped in a private property on the mauka side of the road leading to the park. During my youth the playground was made of metal and wood. Metal in the sun will cause harm to our keiki. Trust me when I say, Miloli'i gets really hot so rubber, metal, or anything that attracts and holds heat is harmful to the children. **IND6-I**
b. How about planting more mature native trees that will provide shade for our keiki and hopefully help with the eroding coastline? Or designating this area for a community garden (or any area in the park) with a shaded area and access to the water station for watering plants on a timer. With this the community can continue its subsistence and sustainable way of living provided by the County.

Finally, I would like to make it clear that the intent of these upgrades beyond complying to make it ADA accessible, is that the park serves the needs of its residents and not visitors. Although, I am convinced all these improvements are being set up to serve visitors and others instead of the residence and the surrounding community that call this area their HOME. It is our home before it's a site to see. To do these planned improvements will only attract more visitors and highlight our place on the map, your sole purpose as a County should be for its local people, not for the money. If you got this far I respectfully mahalo your time and consideration. **IND6-J**

If you have any questions, please feel free to contact me at (808)313-0107 or via email pohaku12@yahoo.com.

Mahalo nui loa,

Leillynne "Laila" Kaupu

Leillynne "Laila" Kaupu

cc: Korey Johnson, Consultant, Bow Engineering and Development, Inc.

Letter IND7

Leivallyn Kaupu
P.O. Box 26
Hōnaunau, HI. 96726
(808) 315-6451
lkaupu@gmail.com

November 9 , 2020

Mr. Jeffrey Ochi
Department of Parks and Recreation, County of Hawai‘i
101 Pauahi St., Suite 6
Hilo, Hawai‘i 96720

Re: Miloli‘i Beach Park Accessibility Improvement Project

Dear Mr. Ochi,

I would like to submit the following comments regarding the Miloli‘i Beach Park Accessibility Improvement Project - Republished Draft EA (AFNSI).

1. How was the portion of land where the current bathrooms are located, acquired by the county/state? In what year? **IND7-A**
2. This portion of land is in Grant #3079 (Omoka‘a owners John K. & Nancy K. Apo Estate) Tax Map Key #3-8-9-003-006.
3. Why is the need for four handicap stalls when two will suffice. (Majority, handicapable, visitors). **IND7-B**
4. Why 12 parking stalls? Visitors, majority of them, park their cars at the park and walk over to the black sand beach of Honomalino for the day. Are these parking stalls to accommodate these people or for those who come to the park for luncheon/picnic, swimming in the pond that is there, go pole fishing in front of the park, etc. **IND7-C**
5. How wide will there be playground equipment for children to play on at the playground? Will it be fenced in due to the fact that it is next to the basketball court and children can get hurt by flying basketballs, etc. **IND7-D**
6. Will water quality testing be done regularly on a monthly basis to check if any problems should occur, due to leakage of the septic system, etc. **IND7-E**
7. The boat turnaround area is not feasible. School bus, water trucks, trucks/boat/trailer/canoes will have a hard maneuvering in a small area. **IND7-C**
8. Who are we (Community of Miloli‘i) accommodating? The visitors or the community?!? **IND7-F**
9. Minimize the amount of changes and improvements to the park as possible. **IND7-G**
10. Where will construction waste be taken? (i.e., fencing, lumber, etc.) Past “park improvements” made by the county, left an abundant amount of waste and trash matter (i.e., iron playground equipment), which was then placed towards the back of the park, on private property.
11. More picnic tables are needed. **IND7-H**
12. Solar lighting over court would benefit the community. It will allow community members to play and utilize the basketball court at night for community gatherings and sporting events. This will encourage the local community to create fun filled activities for all ages that will definitely have a positive impact on the health of everyone. **IND7-I**
13. Our marine resources need to be number one on the agenda for resource protection. An increase in visitors who lack the knowledge and importance of Miloli‘i and it‘s current efforts made by community members to protect/preserve our marine resources will only damage the only resource we, as native/local community members, thrive on. Signage with current marine habitat and **IND7-J**

traditional practices is highly encouraged. Please work with current community families and non-profit organizations to establish this.

14. Updated information is highly recommended. I see that most of your "historical/cultural/social" accounts are from an outdated Paʻa Pono Miloliʻi (non-profit) website. For example, on pg. 25, line 15, it states that, "The Paʻa Pono Miloliʻi website estimates that the village of Miloliʻi has about 200 residents (Paʻa Pono Miloliʻi 2017)." As of March 2020, the village count (native families) has increased and is now estimated between 270-300 residents within the village alone. You must also take into account the increase in the local community, which includes the subdivision just north of Miloliʻi and residential lots going up and down the Miloliʻi road. There alone are over 200 residents. Therefore, the current estimated residential count is over 500 people. This amount alone will have a great impact on the park. **IND7-K**
15. A new pavilion will definitely benefit the community but who will have access to the facilities? How will "power" be provided to the pavilion? I, Leivallyn Kaupu, am one of the current keeper-of-the-keys for the current pavilion. I am incharge of the reservation for the pavilion use. Can there be a "Friends of the Park" agreement with at least one of the current non-profit organizations, that will allow control of pavilion usage for community events? (Paʻa Pono Miloliʻi, Kalanihale, Miloliʻi Solar and Water Board) **IND7-L**
16. With the new pavilion, can there be a designated area for an AED Automated External Defibrillator? Members of the non-profit, Kalanihale, are certified in First Aid/CPR/AED and can assist with maintenance/management of such equipment. **IND7-L**
17. Sea level rise increases the risk of inundation, flooding, storm surges, and coastal erosion. The proposed 5 ft. wide accessible concrete walkway that is supposed to accommodate the ADA will only get damaged during the winter season when rough seas occur every year. How will that be maintained and managed? **IND7-M**
18. Page 33, in the Draft Environmental Assessment booklet is dedicated to the unique, cultural research of a highly recognized and honored historian, Kepa Maly. He interviewed a great amount of kupuna of this area who unfortunately, are no longer here with us today. It is stated on pg. 33 that, "too many people do not respect the ocean and land", "Sites traditionally visited by families, having been developed and/or traditional accesses blocked", and the most predominant one listed is the "Loss of the old Hawaiian system of Konohiki fisheries; adherence to seasons of kapu fisheries." How will this proposed project support and sustain the current cultural lifestyle of its current inhabitant which includes the native and local people, the environment whom we look at as our kupuna of this area, and the future generation? **IND7-N**

If you have any questions, please feel free to contact me at (808) 315-6451 or lkaupu@gmail.com.

Sincerely,

Levi & Viola Kaupu
Leivallyn Kaupu

cc: Korey Johnson, Consultant, Bow Engineering and Development, Inc.

For information purposes only.

Jeffrey Ochi's email: jeffrey.ochi@hawaiicounty.gov

Korey Johnson's address and email: 1953 S. Beretania Street, PH-A, Honolulu, HI 96826
kjohnson@bowengineering.com

The Environmental Notice dated October 8, 2020 at page 3:
http://oeqc2.doh.hawaii.gov/The_Environmental_Notice/2020-10-08-TEN.pdf

Letter IND8

Kamla Kuahuia

November 9th , 2020

Mr. Jeffrey Ochi
Department of Parks and Recreation, County of Hawai‘i
101 Pauahi St., Suite 6
Hilo, Hawai‘i 96720

Re: Miloli‘i Beach Park Accessibility Improvement Project

Dear Mr. Ochi,

I would like to submit the following comments regarding the Miloli‘i Beach Park Accessibility Improvement Project - Republished Draft EA (AFNSI).

I oppose the Draft EA submitted by the Department of Parks and Recreation, County of Hawaii. **IND8-A** I would like to suggest that the park be left alone and is intended for the community of Milolii. I **IND8-B** would also like to suggest that the funds be given to the community to take on the renovations of the park. Another request is that I am also asking is for less camping permits in the park. The **IND8-C** park will be upgraded for the tourist and visitors. I would like to suggest that the community upgrade the halau/pavilion. Finally, we suggest that the basketball/volleyball court and the **IND8-D** intended playground be furthered discussed so that we will be able to fully support. The ADA upgrades need to be further explained and discussed.

If you have any questions, please feel free to contact me at 808.494.0139

Sincerely,

Kamla Kuahuia

cc: Korey Johnson, Consultant, Bow Engineering and Development, Inc.

The Environmental Notice dated October 8, 2020 at page 3:
http://oeqc2.doh.hawaii.gov/The_Environmental_Notice/2020-10-08-TEN.pdf

From: Melanie Lewis <melandanlewis@gmail.com>
Sent: Thursday, August 27, 2020 12:35 PM
To: jeffrey.ochi@hawaiicounty.gov; Korey Johnson
Subject: Milolii improvements

I wanted to express my concern for the plans make major improvements/changes to Milolii Park.

I live in the subdivision in Milolii, and many of the residents in Milolii are dear friends. Over the years, it has changed so much- Milolii is now in the dreaded "blue tourist book" and now there is a steady stream of lookie-loos driving down there. **IND9-A**

The last thing that Milolii needs is more traffic. The road down from HWY 11, which is shared with the subdivision, is narrow and winding. It's not made for the traffic it gets now, and certainly more traffic is not good. It's not fair for those in the subdivision or the village to bring increased traffic down Winding, narrow Milolii road.

Milolii residents are of Hawaiian descent. It is a pristine, beautiful place, inhabited by people who are full of aloha xxl Nd love for the land and sea. Now they have sunburned tourists driving down there, complaining about dogs (they don't know that they are walking on private property), the trail to Honolamino Beach not being paved, etc. the boat ramp is unimproved and residents like it that way! It is not, and should not be, a public access ramp. The people who use it to launch are sustenance fishing, and are very conscious of the health of the beautiful waters and the fishery, and don't over or illegally harvest. The coral on that stretch of shoreline is one of the most pristine and healthy coral beds in the state. **IND9-B** **IND9-C**

Please find another place to do yourimprovements and make easy for the general public to use, and leave Milolii to the Hawaiians. There are plenty of other places that have already been turned into tourist Meccas.

Mahalo and much Aloha,
Melanie Lewis
(808)494-8781

--
null

Letter IND10

Stephanie Llanes-Taetuga

November 9th, 2020

Mr. Jeffrey Ochi
Department of Parks and Recreation, County of Hawai‘i
101 Pauahi St., Suite 6
Hilo, Hawai‘i 96720

Re: Miloli‘i Beach Park Accessibility Improvement Project

Dear Mr. Ochi,

I would like to submit the following comments regarding the Miloli‘i Beach Park Accessibility Improvement Project - Republished Draft EA (AFNSI).

I oppose the Draft EA submitted by the Department of Parks and Recreation, County of Hawaii. **IND10-A**
I would like to suggest that Miloii park does not change the intent of the park and that it continues to be honor the wishes of our community who continues to care for this special place. I **IND10-B**
would like to suggest that the community upgrade the halau/pavilion. Furthermore, that the county of Hawaii park and recreation continues to work with our families to fix and take care of **IND10-C**
the overall park area. Finally, I support the playgrounds upgrades.

If you have any questions, please feel free to contact me at 808.854.5779

Sincerely,

Stephanie Llanes-Taetuga

cc: Korey Johnson, Consultant, Bow Engineering and Development, Inc.

The Environmental Notice dated October 8, 2020 at page 3:
http://oeqc2.doh.hawaii.gov/The_Environmental_Notice/2020-10-08-TEN.pdf

U‘ilani Naipo
1267 Auwae Rd
Hilo, Hawai‘i 96720
uilani.naipo@me.com

November 8, 2020

Mr. Jeffrey Ochi
Department of Parks and Recreation, County of Hawai‘i
101 Pauahi St., Suite 6
Hilo, Hawai‘i 96720

Dear Mr. Ochi,

I am submitting the following comments to you and consultant, Bow Engineering & Development, Inc. in regards to the Miloli‘i Beach Park Accessibility Improvement Project.

I thank you and support your departments efforts in providing accessibility upgrades to Miloli‘i Park. However, I implore you to exercise caution in considering all the changes you plan to implement. Miloli‘i, noted as the Last Hawaiian Fishing Village, wishes to maintain its‘ cultural assets and landscape in a natural traditional manner without unnecessary modifications. As well, I ask that you consider what the function of the park provides for the village as a priority over what the amenities that the park could provide for the general public. **IND11-A**

I appreciate your response to hearing the request to retain the current location of the comfort station and the much needed resurfacing of the basketball/volleyball court. **IND11-B**

Camping Permits

Modifying the park in a manner that promotes increase camping interest and allowing greater number of camping permits would benefit the general public while displacing the needs of the people of Miloli‘i. The people of Miloli‘i should not have to compete with the general public for **IND11-C**

the use the parks‘ space in its‘ own home village. No more than 10 - 12 camping permits should be allowed and during the various annual and special community events, no camping permits should be allowed.

Miloli‘i hosts several self-reliant initiatives that promote education for stewardship of its‘ natural resources and neighboring coastal communities. Various health and well-being community events are also held for keiki and ‘ohana. While doing so, Miloli‘i hosts it‘s presenters and participating guests at the park:

- Miloli‘i ‘Ōpelu Project
- Miloli‘i Lawai‘a Camp
- Mohala Nā Konohiki
- Miloli‘i Hoe Wa‘a Long Distance Regatta
- Lā ‘Ohana
- Lā ‘Elima
- Thanksgiving & Christmas

There are (2) annual fishing tournament events that are hosted by ‘ohana of Miloli‘i. These tournaments provide an opportunity for those that do not live in Miloli‘i to fishing the waters of the village ‘ice box‘. During these events, event participants are hosted at Miloli‘i Park.

- Miloli‘i Classic Fishing Tournament (hosted by Willie Kaupiko during Labor Day weekend)
- Raymond Kuahuia Ho‘olako Fishing Tournament (hosted by ‘Ohana Kuahuia)

Parking / Turn Around Access

It is general practice to make available appropriate parking accesses for our kūpuna, disabled, and mothers of little ones while at the park. What is of greater importance than paved parking is the ability for fisherman to turn around and maneuver safely within the parks‘ space. **IND11-D**

Hālau

If it is imperative to disassemble and construct a new hālau, I would like to see the new structure to resemble the current open pillar structure design with ʻiliʻili ground cover, a kitchen and library/conference room in the same orientation. These aesthetics are inline with landscape of Miloliʻi Village and itsʻ function as a hālau (a meeting house). **IND11-E**

With modest homes of Miloliʻi, many of which shelter multiple generations, the park and hālau is an extension of our village homes, like that of a traditional kauhale. I ask that you consider these comments as you move forward in your project. **IND11-A**

Thank you for receiving my comments. You may contact me if you have any questions.

Naʻu nō
Na Uʻilani

Uʻilani Naipo

cc: Korey Johnson, Bow Engineering & Development, Inc.

Letter IND12

Melissa-Ann Mahealani (Hua) Waite-Crawford
89-1757 Miloliʻi Road
Captain Cook, Hawaii 96704
Sunday, November 8, 2020

Mr. Jeffrey Ochi
Department of Parks and Recreation, County of Hawaiʻi
101 Pauahi St., Suite 6
Hilo, Hawaiʻi 96720

Re: Miloliʻi Beach Park Accessibility Improvement Project

Dear Mr. Ochi,

I would like to submit the following comments regarding the Miloliʻi Beach Park Accessibility Improvement Project - Republished Draft EA (AFNSI).

It appears, that the Department of Parks and Recreation, County of Hawaiʻi are not listening to the hearts of the people who live in the Last Fishing Village of Miloliʻi, South Kona. We have spoken with heart, passion, and most importantly, TRUTH on Sunday, November 3, 2019.

I, Melissa-Ann Mahealani (Hua) Waite-Crawford, DO NOT agree to the Miloliʻi Beach Park Accessibility Improvement Project, therefore, I am against the Miloliʻi Beach Park Accessibility Improvement Project – Republished Draft EA (AFNSI)!

These are the following reasons:

1. The turn around area for fishermen and school buses, is still too small. Those who are part of the planning department for the County of Hawaii needs to go back and do it again. Another reason why it is still to small is because of the planned pavilion your trying to build is now taking up space. **IND12-A**
2. The existing pavilion was spoken for by our Kupunas who attended the November 3, 2019 meeting, County is NOT to touch the existing pavilion. This tells me, you do not care about what the Miloliʻi Village Ohana had to say about your planned pavilion. You are going ahead of yourselves and still putting it up. That is a crap move and you all know it! **IND12-B**
3. The comfort station as you call it, needs to be looked at again! Our people of the Village had told your two (2) representatives, James Komata and Maurice Messina the deputy director to fix the existing problem by checking and testing the waters. This has been a battle for years with you folks, saying that it is not a problem, and yet our children suffer from rash and hives. It is also harming our marine resources that I and many others are trying to protect. What is going to happen when you put up the comfort station? Are you going to fix the problem we are facing now or are you going to cover it up with dirt, then build it. NO, you need to figure out where the leak is, fix that problem, so it no longer harms our children. PONO this first, make it right. **IND12-C** **IND12-D**
4. It also appears the whole project is more than just to update the park for ADA accessibility. You are using this process to build a new pavilion (not wanted by the residence of Miloliʻi), and set up the park to serve visitors, instead of its residents. This is NOT PONO! Please realign your hearts and minds to prioritize projects that serve the residence who live in County of Hawaii, not the tourist/visitors who will be here for only a few days to a couple of weeks. **IND12-E**

Thank you for your time and consideration, if you have taken the time to read through my comments. If you have any questions, please feel free to contact me at 808-895-4616 or via email, lanihua34@gmail.com.

Sincerely,

Melissa-Ann (Hua) Waite-Crawford

Melissa-Ann (Hua) Waite-Crawford

cc: Korey Johnson, Consultant, Bow Engineering and Development, Inc.

From: Imaika Yeaman <imaika.yeaman@gmail.com>
Sent: Friday, November 6, 2020 6:20 PM
To: jeffrey_ochi@hawaiicounty.gov
Cc: Korey Johnson
Subject: Re: Miloli'i Beach Park Accessibility Improvement Project

Mr. Jeffrey Ochi
Department of Parks and Recreation, County of Hawaii
101 Pauahi St. Suite 6
Hilo, HI 96720

Re: Miloli'i Beach Park Accessibility Improvement Plan(EA/ AFONSI)

Aloha Mr. Ochi,
I would like to submit the following comments regarding the planned improvements at Miloli'i Beach Park.

I am opposed to the current Environmental Assessment and Finding of No Significant Impact for Milolii Beach Park Accessibility Improvement Project. As a resident and fisherman I have concerns that have been echoed by other members in this community and have not yet been fully addressed.

First, the spacing and layout of the parking lot and pavilion/ halau does not serve the needs of the residents of this community who are the primary users. I feel that any improvements made should reflect the needs of those who use the park on a weekly, if not daily basis. The new location of the "pavilion" does not give us fishermen enough space to turn around without hitting the side of the building. The turn is already tight with a long trailer. Moving the halau any more will completely impact daily fishing operations. I think the parking lot should be redrawn with more insight from community members. **IND13-A**

My second concern is the number of camping permits that are being proposed. There is not enough room to allow the proposed number of camping permits at this small beach. I suggest 15 or less. How will the increased numbers of visitors impact our small community? How will more visitors affect the trails and beaches down the coast that have no restroom facilities? Will it fall upon residents to educate the increased numbers of visitors of where and where not to safely swim? For Miloli'i and its residents these are significant impacts. **IND13-B**

Please take these comments into consideration, feel free to contact me at this email if you have any questions.

Aloha, Imaikalani Yeaman

TABLE: SUMMARY COMMENTS AND RESPONSES

Comment #	Date	Comment	Response
DRAFT EA COMMENTS AND RESPONSES			
State Agencies			
SA1	10/31/2020	United States Fish and Wildlife Service (USFWS), Pacific Islands Fish and Wildlife Office, Michelle Bogardus	
SA1-A		The letter identifies ten listed species in the immediate vicinity of the project area, and provides recommended measures to avoid and minimize potential project impacts to listed species.	Section 3.4, *Biological Resources*, of the Final EA has been updated to incorporate USFWS recommended measures to minimize impacts to listed species that could occur in the immediate vicinity of the project area.
SA2	undated	State of Hawai‘i, Department of Health, Clean Air Branch	
SA2-A		The letter provides Standard Comments for Land Use Reviews relating to: a required Air Pollution Control Permit; construction or demolition activities that involve asbestos; and whether the project has the potential to generate fugitive dust.	As set forth in Section 3.6, *Air Quality and Climate*, dust control measures to minimize fugitive dust during construction will be implemented, and all construction work will be in conformance with the air pollution control standards contained in Title 11, Chapter 59, HAR, "Ambient Air Quality Standards," and Chapter 60, "Air Pollution Control," which would minimize air quality emissions. No changes to the EA are necessary.
SA3	8/19/2020	State of Hawaii, Department of Transportation, Jade T. Butay	
SA3-A		The letter states that because the project would have no significant impacts to State highway facilities, the Department has no comments.	Comment noted. No response required.
SA4	9/3/2020	State of Hawai‘i, State Legislature, Senator Kaiali‘i Kahele, Senator Dru Mamo Kanuha, Representative Richard P. Creagan	
SA4-A		The letter urges the Department of Parks and Recreation to extend or postpone the deadline to submit comments on the project from September 8, 2020 to November 6, 2020, due to the effects of Covid-19. The letter also expresses concern regarding community engagement for the project, noting that questions remain following cancellation of a third community meeting.	Due to concerns regarding adequate opportunities for public participation during COVID-19, the public comment period was extended to 90 days. The Draft EA was published in several issues of *The Environmental Notice*, including the August 8, 2020, the September 8, 2020 issue, and the October 8, 2020 issue. Community meetings were held at the park on October 18, 2019 and November 3, 2019, and a third community meeting was held on May 16, 2021. See Chapter 6 of the EA for a summary of consultation and meetings regarding the proposed project.
SA5	11/9/2020	State of Hawai‘i, State Legislature, Senator Kaiali‘i Kahele	
SA5-A		The letter states that the DEA does not acknowledge that a Conservation District Use Permit will be required.	Section 2.3 of the Draft and Final EA identifies the requirement for a Conservation District Use Application Site Plan approval from DLNR, Office of Conservation and Coastal Lands (OCCL). Results of early consultation with OCCL and permit requirements are further explained in Section 3.12 of the Draft and Final EA and the OCCL response letter is included in Appendix A, *Early Consultation Comment Letters*. No changes to the EA are necessary.

Comment #	Date	Comment	Response
SA5-B		The letter asks if the Board of Land and Natural Resources should be the final approving agency.	The County of Hawai‘i, Department of Parks and Recreation is the proposing agency for the park improvement project. Since the Department of Parks and Recreation is the agency using funds for these park improvements, it is the agency responsible for complying with Section 343-5(a), HRS. No changes to the EA are necessary.
SA5-C		The letter also requests clarification as to whether or not the project will require authorization by the Department of the Army.	Following early consultation with the U.S. Army Corps of Engineers, it was determined that because no work would occur in the water, a Department of the Army permit would not be required (see Section 3.2, *Hydrology and Water Quality* of the Draft and Final EA). No changes to the EA are necessary.
SA5-D		The letter questions whether the State Historic Preservation Division (SHPD) was consulted regarding the archaeological inventory survey (AIS) as required. The comment states that no consultation with local area practitioners was conducted, and that the absence or presence of archaeological sites at the beach park location is unknown and needs to be resolved.	Consultation with the SHPD regarding the AIS was initiated following completion of the AIS, and was officially completed in July 2022. The SHPD determined that the AIS report prepared for the project satisfied the requirements of HAR Section 13-276-5, and accepted the conclusions found therein. See Appendix B for the SHPD Chapter 6E-8 Historic Preservation Review and a copy of the AIS. The Final EA Section 3.4 includes additional discussion regarding community consultation and potential impacts to cultural practices and cultural features. As stated in the AIS and the EA, the effects of multiple tsunamis and the historic impacts to the property by the construction and use of the school suggests that no pre-contact archaeological sites or features are likely to be encountered. The EA includes regulatory measures to stop work in the event cultural finds are encountered during construction, and sets forth proper cultural protocols and treatment of the finds.
SA5-E		The letter states that the DEA does not sufficiently identify traditional and customary practices in the area, nor does it identify potential impacts to those activities.	The Final EA Section 3.4 includes additional discussion regarding community consultation and potential impacts to cultural practices and cultural features. The proposed project represents a continuation of existing uses and would not negatively impact access to the shoreline, or affect designated significant historic properties. The County aims to provide ongoing beach park access, including the boat turn-around and access to fishing, during construction and operation of the proposed improvements.
SA5-F		The letter states that the County of Hawai‘i (COH) is improving the park to increase recreational access, but that the park already experiences overuse by those who park there to walk to Honomalino Bay. The letter asks if a traffic study has been completed, and what steps would be taken to improve road access and safety with the increase in vehicles.	The proposed ADA improvements would not increase overall access to the park, but would improve access for disabled visitors and existing park users. There would be no direct increase in operational traffic due to implementation of the proposed project. No traffic study has been completed as part of the project, nor are there any planned improvements Miloli‘i Road. The County will consider the views expressed in these comments in their review and actions on the proposed accessibility improvements project. No changes to the EA are necessary.

Comment #	Date	Comment	Response
SA5-G		The letter states that the COH should make improvements to the existing pavilion rather than demolish it and construct a new one.	Reconstruction of the existing pavilion was considered in the initial design consideration meetings. Based on preliminary engineering review, it was determined that the existing pavilion would need a complete onsite engineering assessment, which would include extensive investigation and could entail destructive testing to assess the condition of existing structural components. Further, to meet Planning Department requirements to be located outside of the flood zone, it was determined that existing pavilion must be demolished and a new pavilion constructed in its place. No changes to the EA are necessary.
SA5-H		The letter states that project would dramatically alter the existing character of the Miloli‘i Beach Park.	Comment is noted. The County will consider the views expressed in these comments in their review and actions on the proposed accessibility improvements project. No changes to the EA are necessary.
SA5-I		The letter requests more specific information regarding the use of state funding for the project, and suggests that if state funding is used, an Environmental Impact Statement (EIS) should be prepared.	As stated in the EA Section 2.2, the project would be constructed based on funding availability from the state, with estimated construction costs of $1.75 million. Preparation of an EIS is required when significant adverse effects to the environment are anticipated, not if state funds are used. The County will consider the views expressed in these comments in their review and actions on the proposed accessibility improvements project. No changes to the EA are necessary.
SA5-J		The letter questions the assertion in the DEA that there was overall “positive feedback from the community.” The letter suggests the community agreed that limited improvements were necessary, but not to the extent proposed.	Comment is noted. The statement regarding positive feedback from the community has been struck from the EA. The County will consider the views expressed in these comments in their review and actions on the proposed accessibility improvements project.
SA5-K		The letter states that the COH has conducted insufficient community outreach, and that such outreach should allow for more interaction and input from community members.	See response to comment SA4-A.
SA5-L		The letter states that project design for the boat ramp area does not adequately consider the turn-around radius and movements needed for the various sizes of fishing vessels that launch from the boat ramp.	Comment is noted. The boat turn-around area was discussed during the community meetings for the project. Considering the necessary site design elements to make the park ADA accessible, the designated boat turn-around area was made as large as possible. Boat trailers are also able to use Miloli‘i Road as part of the turn-around movement. The County will consider the views expressed in these comments in their review and actions on the proposed accessibility improvements project. No changes to the EA are necessary.
SA5-M		The letter states that the project should be evaluated with an EIS in order to fully identify all the potential impacts.	Comment is noted. The County will consider the views expressed in these comments in their review and actions on the proposed accessibility improvements project. No changes to the EA are necessary.

Comment #	Date	Comment	Response
SA6	11/9/2020	State of Hawaii, Office of Hawaiian Affairs, Kamakana Ferreira	
SA6-A		The comments of the Office of Hawaiian Affairs (OHA) pertain to historic preservation review compliance and cultural resources. Regarding HRS 6E compliance, the letter states that the AIS is incomplete and in draft form. The letter also states that the SHPD consultation and review of the AIS has not been completed for compliance with HRS 6E as is required.	See response to Comment SA5-D regarding Chapter 6E consultation with the SHPD. The County will consider the views expressed in these comments in their review and actions on the proposed accessibility improvements project.
SA6-B		The letter states that there has been no cultural impact assessment (CIA) performed for the project. The DEA includes oral history reviews conducted in 2003 for a different project in Miloli‘i. However, suggested mitigation to aid in fish population recovery from these interviews were included in the DEA. Members of the local Kaupiko ‘ohana and other beneficiaries have concerns regarding impacts to fishermen in the area and potential overcrowding. OHA recommends that the DPR complete a CIA that is compliant with guidelines of the Office of Environmental Quality Control. The letter also reminds the DPR of its responsibility to reasonably protect traditional and customary Native Hawaiian rights as required by Articles IX and XII of the State of Hawai‘i Constitution.	See response to comment SA5-D regarding Chapter 6E consultation with the SHPD. The Final EA Section 3.4 includes additional discussion regarding community consultation and potential impacts to cultural practices and cultural features. The proposed project represents a continuation of existing uses and would not negatively impact access to the shoreline, or affect designated significant historic properties. The EA does not include suggested mitigation to aid in fish population recovery since the proposed accessibility improvements would not result in an increase in use of these resources. The County aims to provide ongoing beach park access, including the boat turn-around and access to fishing, during construction of the proposed improvements.
Private Individuals			
IND1	11/9/2020	Shirley Casuga, Against the project.	
IND1-A		The letter states that project will increase land taxes.	Comment is noted. The County will consider the views expressed in these comments in their review and actions on the proposed accessibility improvements project. Because the comment does not raise any concerns regarding the content or environmental conclusions of the Draft EA, no changes to the EA are necessary.
IND1-B		The letter suggests that fewer camping permits be issued in for the park.	Comment is noted. A maximum of 22 campers per night are currently allowed with permits. With implementation of the improvements, camping rules and reservations would remain the same as those existing. The County will consider the views expressed in these comments in their review and actions on the proposed accessibility improvements project. Because the comment does not raise any concerns regarding the content or environmental conclusions of the Draft EA, no changes to the EA are necessary.

Comment #	Date	Comment	Response
IND1-C		The letter states that the proposed upgrades would benefit tourists and visitors rather than the community.	Comment is noted. The Miloli‘i Beach Park is an important community resource. As communicated at the community meetings, the proposed project was initiated to meet the federal mandate for ADA compliance; the project would not make any changes to the existing use of the beach park, and the Hālau pavilion would remain under control of the community. The intended use of the park is for the Miloli‘i Village community. As stated by the County, when the project is completed, there will be no public announcement in order to keep it as community-oriented and "low-key" as possible. The County will consider the views expressed in these comments in their review and actions on the proposed accessibility improvements project. Because the comment does not raise any concerns regarding the content or environmental conclusions of the Draft EA, no changes to the EA are necessary.
IND1-D		The letter suggests that the Department of Parks and Recreation (DPR) work with the community to discuss upgrades to the halau/pavilion and ADA compliance features.	Comment is noted. See response to comment SA4-A regarding community consultation. The County will consider the views expressed in these comments in their review and actions on the proposed accessibility improvements project. No additional changes to the EA are necessary.
IND2	undated	Ben and Darlene Casuga, Against the project.	
IND2-A		The letter states that the proposed project would not honor and protect the cultural integrity of the village. The letter also states that the proposed upgrades would benefit tourists and visitors rather than the community.	Comment is noted. See response to comment IND1-C regarding community use and benefit of the park. The County will consider the views expressed in these comments in their review and actions on the proposed accessibility improvements project. No changes to the EA are necessary.
IND2-B		The letter suggests that fewer camping permits be issued in for the park.	Comment is noted. See response to comment IND1-B regarding camping permits. The County will consider the views expressed in these comments in their review and actions on the proposed accessibility improvements project. No changes to the EA are necessary.
IND2-C		The letter suggests that DPR work with the community to discuss upgrades to the halau/pavilion and ADA compliance features.	Comment is noted. See response to comment SA4-A regarding community consultation. The County will consider the views expressed in these comments in their review and actions on the proposed accessibility improvements project. No additional changes to the EA are necessary.
IND3	11/3/2020	Ka‘imi N. Kaupiko, Against the project.	
IND3-A		The letter suggests renovation of the existing pavilion rather than construction of a new building.	Comment is noted. See response to comment SA5-G regarding reconstruction of the pavilion. The County will consider the views expressed in these comments in their review and actions on the proposed accessibility improvements project. No changes to the EA are necessary.

Comment #	Date	Comment	Response
IND3-B		The letter states that the proposed additional parking areas would cause congestion; the project could cause traffic and parking issues for fishermen due to the tight turn-around area.	Comment is noted. See response to comment SA5-L regarding the necessary site design elements and congestion. The County will consider the views expressed in these comments in their review and actions on the proposed accessibility improvements project. No changes to the EA are necessary.
IND3-C		The letter states that the proposed number of camping permits is excessive.	Comment is noted. See response to comment IND1-B regarding camping permits. The County will consider the views expressed in these comments in their review and actions on the proposed accessibility improvements project. No changes to the EA are necessary.
IND3-D		The letter states that the proposed upgrades would benefit tourists and visitors rather than the community.	Comment is noted. See response to comment IND1-C regarding community use and benefit of the park. The County will consider the views expressed in these comments in their review and actions on the proposed accessibility improvements project. No changes to the EA are necessary.
IND3-E		The letter expresses concerns with septic fields associated with existing bathrooms, and requests more bathroom stalls than proposed with the project.	Comment is noted. Water Quality testing was conducted at five different locations at Miloliʻi Beach Park at high and low tides between March 9, 2020 and March 11, 2020 as part of the IWS Assessment and Feasibility Study for the project (see Appendix D of the Final EA). In general, the waters surrounding Miloliʻi Beach Park are being negatively impacted by enterococcus. However, based on water sampling locations and the results of a dye test, it does not appear to be resulting from the beach park septic system. See Section 3.2 and Appendix D of the Final EA for additional discussion.
IND3-F		The letter indicates support for the resurfacing of the volleyball/basketball court.	Comment noted.
IND3-G		The letter suggests that the project include a multi-use facility with indoor and outdoor features.	Comment is noted. The County will consider the views expressed in these comments in their review and actions on the proposed accessibility improvements project. No additional changes to the EA are necessary.
IND3-H		The letter expresses concerns with the proposed playground area in regard to adequate shade.	Comments is noted. It is anticipated that two trees would be removed with construction of the proposed improvements. Both the playground area and the basketball court include 6-foot fences for child safety. The County will consider the views expressed in these comments in their review and actions on the proposed accessibility improvements project. No changes to the EA are necessary.
IND4	11/3/2020	Kaʻimi N. Kaupiko	
IND4-A		This letter appears to be a duplicate of IND3.	See responses to comment IND3.

Comment #	Date	Comment	Response
IND5	undated	Wilfred Kaupiko, Against the project.	
IND5-A		The letter suggests that DPR work with the community to discuss upgrades to the halau/pavilion and ADA compliance features.	Comment is noted. See response to comment SA4-A regarding community consultation. The County will consider the views expressed in these comments in their review and actions on the proposed accessibility improvements project. No additional changes to the EA are necessary.
IND5-B		The letter states that the proposed project would not honor and protect the cultural integrity of the village. The letter also states that the proposed upgrades would benefit tourists and visitors rather than the community.	Comment is noted. See response to comment IND1-C regarding community use and benefit of the park. The County will consider the views expressed in these comments in their review and actions on the proposed accessibility improvements project. No changes to the EA are necessary.
IND5-C		The letter suggests that a Cultural Impact Statement take place.	Comment is noted. See response to comment SA5-E and SA6-B regarding community consultation and potential impacts to cultural practices and cultural features. The County will consider the views expressed in these comments in their review and actions on the proposed accessibility improvements project.
IND6	11/8/2020	Leillynne Kaupu, Against the project.	
IND6-A		The letter states that communication from the County to community residents has been insufficient and inconsistent.	Comment is noted. See response to comment SA4-A regarding community consultation. The County will consider the views expressed in these comments in their review and actions on the proposed accessibility improvements project.
IND6-B		The letter states that relocation of the pavilion and the proposed additional parking areas would cause congestion; the project could cause traffic and parking issues for fishermen due to the tight turn-around area.	Comment is noted. See response to comment SA5-L regarding the necessary site design elements and congestion. The County will consider the views expressed in these comments in their review and actions on the proposed accessibility improvements project. No changes to the EA are necessary.
IND6-C		The letter states that the proposed number of camping permits is excessive.	Comment is noted. See response to comment IND1-B regarding camping permits. The County will consider the views expressed in these comments in their review and actions on the proposed accessibility improvements project. No changes to the EA are necessary.
IND6-D		The letter expresses concerns with water quality contamination from septic fields associated with existing bathrooms, and requests more bathroom stalls than proposed with the project.	Comment is noted. See response to comment IND3-E regarding water quality testing. The County will consider the views expressed in these comments in their review and actions on the proposed accessibility improvements project. No additional changes to the EA are necessary.
IND6-E		The letter states that the community population estimate based on 2017 data is not accurate.	Comment is noted. The community population estimate has been updated in Section 3.9 of the EA with the best available information.
IND6-F		The letter expresses concerns with the proposed vehicular barriers.	Comments is noted. The barriers would be constructed of concrete and would not restrict access to the existing residence. The County will consider the views expressed in these comments in their review and actions on the proposed accessibility improvements project. No changes to the EA are necessary.

Comment #	Date	Comment	Response
IND6-G		The letter indicates support for the resurfacing of the volleyball/basketball court.	Comment noted.
IND6-H		The letter indicates support for the use of solar lighting.	Comment noted.
IND6-I		The letter expresses concerns with the proposed playground area in regard to adequate shade and child safety.	Comments is noted. See response to comment IND3-H regarding shade trees. The County will consider the views expressed in these comments in their review and actions on the proposed accessibility improvements project. No changes to the EA are necessary.
IND6-J		The letter states that the proposed upgrades would benefit tourists and visitors rather than the community.	Comment is noted. See response to comment IND1-C regarding community use and benefit of the park. The County will consider the views expressed in these comments in their review and actions on the proposed accessibility improvements project. No changes to the EA are necessary.
IND7	11/9/2020	Leivallyn Kaupu, Against the project.	
IND7-A		The letter asks when the land where the bathrooms are located were acquired by the county/state. The comment states the portion of land where the bathrooms are located are in Grant #3079, and Tax Map Key #3-8-9-003-006.	As stated in the EA, the project area was set aside as a public park as early as 1931 by the territorial governor. Officially, the Miloli‘i Beach Park was created by Executive Order 2435 and has been under the management of the County of Hawai‘i since 1985. According to project surveys and GIS information, the project site is located on TMK (3) 8-9-004:001. Additional comments are noted. The County will consider the views expressed in these comments in their review and actions on the proposed accessibility improvements project.
IND7-B		The letter suggests that four handicapped bathroom stalls are more than are needed.	Comment is noted. The County will consider the views expressed in these comments in their review and actions on the proposed accessibility improvements project. No changes to the EA are necessary.
IND7-C		The letter states that the proposed additional parking areas would cause congestion; the project could cause traffic and parking issues for fishermen due to the tight turn-around area.	Comment is noted. Parking needs were determined by the Department of Planning and Permitting. See response to comment SA5-L regarding the necessary site design elements and congestion. The County will consider the views expressed in these comments in their review and actions on the proposed accessibility improvements project. No changes to the EA are necessary.
IND7-D		The letter expresses concerns with the proposed playground area in regard to child safety.	Comments is noted. See response to comment IND3-H regarding shade trees and child safety. The County will consider the views expressed in these comments in their review and actions on the proposed accessibility improvements project. No changes to the EA are necessary.
IND7-E		The letter expresses concerns with septic fields associated with existing bathrooms, and requests more bathroom stalls than proposed with the project. The letter requests water quality on a monthly basis.	Comment is noted. There are no current plans for the County to complete monthly water quality testing. See response to comment IND3-E regarding water quality testing completed for the project evaluation. The County will consider the views expressed in these comments in their review and actions on the proposed accessibility improvements project. No additional changes to the EA are necessary.

Comment #	Date	Comment	Response
IND7-F		The letter states that the proposed upgrades would benefit tourists and visitors rather than the community.	Comment is noted. See response to comment IND1-C regarding community use and benefit of the park. The County will consider the views expressed in these comments in their review and actions on the proposed accessibility improvements project. No changes to the EA are necessary.
IND7-G		The letter requests minimizing the extent of changes to the park, and expresses concern regarding the removal of construction waste.	Comment is noted. Excavated materials from construction would be separated and reused on the project site, as possible. Following completion of the proposed improvements, all unpaved areas to be graded would be grassed or hydroseeded. Any remaining construction waste would be removed from the project site.
IND7-H		The letter states that more picnic tables are needed.	Comments is noted. The County will consider the views expressed in these comments in their review and actions on the proposed accessibility improvements project. No changes to the EA are necessary.
IND7-I		The letter indicates support for the use of solar lighting.	Comments is noted. The County will consider the views expressed in these comments in their review and actions on the proposed accessibility improvements project. No changes to the EA are necessary.
IND7-J		The letter expresses concerns with protection of marine resources, and requests signage regarding the marine habitat and traditional practices.	Comments is noted. See section 3.2 of the EA for a discussion water quality. The County will consider the views expressed in these comments in their review and actions on the proposed accessibility improvements project. No changes to the EA are necessary.
IND7-K		The letter states that the community population estimate based on 2017 data is not accurate.	Comment is noted. The community population estimate has been updated in Section 3.9 of the EA with the best available information.
IND7-L		The letter expresses concerns with pavilion access control by community members, power source, and equipment including an automated external defibrillator.	Comment is noted. See response to comment IND1-C regarding the park as a community resource. As described in the project description, a new PV system will be installed. Reservations and use of the pavilion would not change with the project. The County will consider the views expressed in these comments in their review and actions on the proposed accessibility improvements project. No additional changes to the EA are necessary.
IND7-M		The letter expresses concerns with the sidewalk design relative to sea level rise.	Comment is noted. The Final EA Section 3.3 includes additional discussion regarding Sea Level Rise and potential impacts to park features. Park maintenance and repair would be the responsibility of the Department of Parks and Recreation. The County will consider the views expressed in these comments in their review and actions on the proposed accessibility improvements project. No additional changes to the EA are necessary.

Comment #	Date	Comment	Response
IND7-N		The letter states that the proposed project would not honor and protect the cultural integrity of the village.	Comment is noted. See response to comment IND1-C regarding community use and benefit of the park. The County will consider the views expressed in these comments in their review and actions on the proposed accessibility improvements project. No changes to the EA are necessary.
IND8	11/9/2020	Kamla Kuahuia, Against the project.	
IND8-A		The letter states that the proposed upgrades would benefit tourists and visitors rather than the community.	Comment is noted. See response to comment IND1-C regarding community use and benefit of the park. The County will consider the views expressed in these comments in their review and actions on the proposed accessibility improvements project. No changes to the EA are necessary.
IND8-B		The letter requests that funds be provided directly to the community for their use in making renovations to upgrade the halau/pavilion.	Comment is noted. The County will consider the views expressed in these comments in their review and actions on the proposed accessibility improvements project. No changes to the EA are necessary.
IND8-C		The letter states that the proposed number of camping permits is excessive.	Comment is noted. See response to comment IND1-B regarding camping permits. The County will consider the views expressed in these comments in their review and actions on the proposed accessibility improvements project. No changes to the EA are necessary.
IND8-D		The letter suggests that DPR work with the community to discuss upgrades to the halau/pavilion, ADA compliance features, the proposed playground, and the basketball/volleyball court.	Comment is noted. See response to comment SA4-A regarding community consultation. The County will consider the views expressed in these comments in their review and actions on the proposed accessibility improvements project. No additional changes to the EA are necessary.
IND9	8/27/2020	Melanie Lewis, Against the project.	
IND-A		The letter states that Miloli'i Road has too much traffic now, and the project would bring more traffic.	Comment is noted. See response to comment SA5-F regarding traffic and access to the park. The County will consider the views expressed in these comments in their review and actions on the proposed accessibility improvements project. No changes to the EA are necessary.
IND9-B		The letter states that the proposed project would not honor and protect the cultural integrity of the village. The letter also states that the proposed upgrades would benefit tourists and visitors rather than the community.	Comment is noted. See response to comment IND1-C regarding community use and benefit of the park. The County will consider the views expressed in these comments in their review and actions on the proposed accessibility improvements project. No changes to the EA are necessary.

Comment #	Date	Comment	Response
IND9-C		The letter states that the boat ramp is unimproved, and should not be a public access ramp.	Comment is noted. See response to comment IND1-C regarding community use and benefit of the park. Miloli‘i Landing, north of the Beach Park, is on state lands and contains a rocky shoreline and a boat ramp. The proposed project does not include any changes to the boat ramp. The County will consider the views expressed in these comments in their review and actions on the proposed accessibility improvements project. No changes to the EA are necessary.
IND10	11/9/2020	Stephanie Llaned-Taetuga, Mixed feelings about the project.	
IND10-A		The letter states that the proposed project would not honor and protect the cultural integrity of the village.	Comment is noted. See response to comment IND1-C regarding community use and benefit of the park. The County will consider the views expressed in these comments in their review and actions on the proposed accessibility improvements project. No changes to the EA are necessary.
IND10-B		The letter requests that funds be provided directly to the community for their use in making renovations to upgrade the halau/pavilion.	Comment is noted. The County will consider the views expressed in these comments in their review and actions on the proposed accessibility improvements project. No changes to the EA are necessary.
IND10-C		The letter suggests that DPR work with the community to discuss upgrades to the halau/pavilion and ADA compliance features.	Comment is noted. See response to comment SA4-A regarding community consultation. The County will consider the views expressed in these comments in their review and actions on the proposed accessibility improvements project. No additional changes to the EA are necessary.
IND10-D		The letter expresses support for the playground upgrades.	Comment is noted. The County will consider the views expressed in these comments in their review and actions on the proposed accessibility improvements project. No changes to the EA are necessary.
IND11	11/8/2020	U‘ilani Naipo, Mixed feelings about the project.	
IND11-A		The letter states that the proposed project would not honor and protect the cultural integrity of the village. The letter also states that the proposed upgrades would benefit tourists and visitors rather than the community.	Comment is noted. See response to comment IND1-C regarding community use and benefit of the park. The County will consider the views expressed in these comments in their review and actions on the proposed accessibility improvements project. No changes to the EA are necessary.
IND11-B		The letter indicates support for the resurfacing of the volleyball/basketball court.	Comment noted. The County will consider the views expressed in these comments in their review and actions on the proposed accessibility improvements project.
IND11-C		The letter states that the proposed number of camping permits is excessive.	Comment is noted. See response to comment IND1-B regarding camping permits. The County will consider the views expressed in these comments in their review and actions on the proposed accessibility improvements project. No changes to the EA are necessary.

Comment #	Date	Comment	Response
IND11-D		The letter states that the proposed additional parking areas would cause congestion; the project could cause traffic and parking issues for fishermen due to the tight turn-around area.	Comment is noted. See response to comment SA5-L regarding the necessary site design elements and congestion. The County will consider the views expressed in these comments in their review and actions on the proposed accessibility improvements project. No changes to the EA are necessary.
IND11-E		The letter suggests that DPR work with the community to discuss upgrades to the halau/pavilion and ADA compliance features. The letter also suggests renovation of existing pavilion rather than construction of a new building.	Comment is noted. See response to comment SA4-A regarding community consultation. The County will consider the views expressed in these comments in their review and actions on the proposed accessibility improvements project. No additional changes to the EA are necessary.
IND12	11/8/2020	Melissa-Ann Mahealani (Hua) Waite-Crawford, Against the project.	
IND12-A		The letter states that the proposed additional parking areas would cause congestion; the project could cause traffic and parking issues for fishermen due to the tight turn-around area.	Comment is noted. See response to comment SA5-L regarding the necessary site design elements and congestion. The County will consider the views expressed in these comments in their review and actions on the proposed accessibility improvements project. No changes to the EA are necessary.
IND12-B		The letter suggests that DPR work with the community to discuss upgrades to the halau/pavilion and ADA compliance features. The letter also suggests renovation of existing pavilion rather than construction of a new building.	Comment is noted. See response to comment SA4-A regarding community consultation. The County will consider the views expressed in these comments in their review and actions on the proposed accessibility improvements project. No additional changes to the EA are necessary.
IND12-C		The letter expresses concerns with septic fields associated with existing bathrooms, and requests more bathroom stalls than proposed with the project.	Comment is noted. See response to comment IND3-E regarding water quality testing. The County will consider the views expressed in these comments in their review and actions on the proposed accessibility improvements project. No additional changes to the EA are necessary.
IND12-D		The letter expresses concerns that the project will harm marine habitat.	Comment is noted. See response to comment IND7-J regarding impacts to the marine environment. The County will consider the views expressed in these comments in their review and actions on the proposed accessibility improvements project. No additional changes to the EA are necessary.
IND12-E		The letter states that the proposed project would not honor and protect the cultural integrity of the village. The letter also states that the proposed upgrades would benefit tourists and visitors rather than the community.	Comment is noted. See response to comment IND1-C regarding community use and benefit of the park. The County will consider the views expressed in these comments in their review and actions on the proposed accessibility improvements project. No changes to the EA are necessary.
IND13	11/6/2020	Imaika Yeaman, Against the project.	
IND13-A		The letter states that the proposed additional parking areas would cause congestion; the project could cause traffic and parking issues for fishermen due to the tight turn-around area.	Comment is noted. See response to comment SA5-L regarding the necessary site design elements and congestion. The County will consider the views expressed in these comments in their review and actions on the proposed accessibility improvements project. No changes to the EA are necessary.

Comment #	Date	Comment	Response
IND13-B		The letter states that the proposed number of camping permits is excessive.	Comment is noted. See response to comment IND1-B regarding camping permits. The County will consider the views expressed in these comments in their review and actions on the proposed accessibility improvements project. No changes to the EA are necessary.

APPENDIX B
ARCHAEOLOGICAL SURVEY

1231-081022

FINAL

ARCHAEOLOGICAL INVENTORY SURVEY

TMK: (3) 8-9-004: 001

MILOLIʻI AHUPUAʻA

SOUTH KONA DISTRICT

ISLAND OF HAWAIʻI

Haun & Associates

Archaeological, Cultural, and Historical Resource Management Services

73-4161 Kaao Road, Kailua-Kona HI 96740

Phone: 808-325-2402 Fax: 808-325-1520

1231-081022

FINAL

ARCHAEOLOGICAL INVENTORY SURVEY

TMK: (3) 8-9-004: 001

MILOLIʻI AHUPUAʻA

SOUTH KONA DISTRICT

ISLAND OF HAWAIʻI

Prepared by:

Alan E. Haun, Ph.D.
and
Dave Henry, B.S.

Prepared for:

County of Hawaiʻi
Department of Parks and Recreation
c/o
Bow Engineering & Development, Inc.
1953 S. Beretania Street, PH-A
Honolulu, HI 96826

August 2022

HAUN & ASSOCIATES
ARCHAEOLOGICAL, CULTURAL, AND HISTORICAL RESOURCE MANAGEMENT SERVICES
73-4161 KAAO ROAD, KAILUA-KONA HI 96740
PHONE: 808-325-2402 FAX: 808-325-1520

MANAGEMENT SUMMARY

Haun & Associates conducted an archaeological inventory survey (AIS) of TMK: (3) 8-9-004:001 located in Miloli‘i Ahupua‘a, South Kona District, Island of Hawai‘i. The objective of the AIS is to satisfy current historic preservation regulatory review inventory requirements of the Department of Land and Natural Resources-State Historic Preservation Division (DLNR-SHPD), as contained within Hawai‘i Administrative Rules, Title 13, DLNR, Subtitle 13, Chapters 275 and 276, State Historic Preservation Rules.

The project area comprises the current Miloli‘i Beach Park; a 1.41 acre recreational facility located along the shoreline that contains a covered pavilion, a basketball/volleyball court, parking areas, a restroom, a catchment tank, a pump house, and firepits. The parcel is the former location of the Miloli‘i School which closed in 1966 and was conveyed to the County of Hawai‘i in 1969.

The archaeological inventory survey identified three historic single feature sites. These consist of an erosion control retaining wall (Site 50-10-65-31097[1].), a discontinuous boundary wall (Site 31098), and an historic basketball court (Site 31099). The Site 31097 retaining wall functions to prevent coastal erosion, while the Site 31098 wall separates the project area from an adjacent house lot. The Site 31099 basketball court represents the only surviving remnant of the actual school facility.

The mapping, written description and photography of Sites 31097, 31098, and 31099 adequately document them and no further work or preservation is recommended. The current project was done in conjunction with the preparation of an Environment Assessment for improvements to the existing Miloli’i Beach Park.

Cover photo: Site 31097 retaining wall and Miloli‘i Halau (view to west)

[1] All sites listed on the State Inventory of Historic Places (SIHP). Site numbers are 5 digit sequential numbers by island : 50 = State of Hawai‘i, 10= Island of Hawai‘i, 65=Miloli‘i quadrangle, 31097 = Site number

Contents

MANAGEMENT SUMMARY ii
INTRODUCTION 1
Scope of Work 1
Project Area Description 1
Methods 9
ARCHAEOLOGICAL AND HISTORICAL BACKGROUND 10
Historical Documentary Research 10
Previous Archaeological Work 27
Previous Archaeological Work in Project Area Vicinity 30
PROJECT EXPECTATIONS 32
CONSULTATION 32
FINDINGS 34
CONCLUSION 40
Discussion 40
Significance Assessments 40
Treatment Recommendations 40
TRANSLATION OF HAWAIIAN WORDS 41
REFERENCES 42

Figures

Figure 1. Portion of 7.5' 1998 USGS Miloli'i Quadrangle showing project area 2
Figure 2. Tax Map Key 8-9-004 showing project area..... 3
Figure 3. Proposed developments in the Miloli'i Beach Park 3
Figure 4. January 2013 aerial view of project area (from Google Earth) 4
Figure 5. Feature A modern planter (view to west)..... 6
Figure 6. Feature B and C modern planters (view to west) 6
Figure 7. Feature D modern planter (view to north) 7
Figure 8. Feature G modern planter (view to east) 7
Figure 9. Wooden sign in Feature E planter (from Watson and Farber 2012)..... 8
Figure 10. Feature F collapsed modern planter (view to west) 8
Figure 11. Ahupua'a boundaries and Land Commission Awards in Miloli'i Ahupua'a..... 11
Figure 12. Map of Kapalilua Region (from modified from Maly and Maly 2003:2) 12
Figure 13. Undated photograph of Hau'oli Kamana'o Congregational Church (from Pa'a Pono Miloli'i website)..... 16
Figure 14. La 'Elima (from http://paaponomilolii.org/ Ho'ōpūloa wp-content/uploads/LaElimaProgram.pdf) 17
Figure 15. Tsunami run-up heights in project area vicinity (from Loomis 1976:71). 19
Figure 16. Portion of Wall's 1914 Map of Okoe, Honomalino, and Kipahoehoe Government Tracts 21
Figure 17. Lava flow approaching Ho'ōpūloa Village (from Pa'a Pono Miloli'i 1984:2)..... 22
Figure 18. Lava flow entering village at 5:15 am (from Pa'a Pono Miloli'i 1984:3) 22
Figure 19. Houses destroyed by 5:30 am (Pa'a Pono Miloli'i 1984:3) 23
Figure 20. 6:21 am photograph of lava entering ocean (from Pa'a Pono Miloli'i 1984:4) 23
Figure 21. 6:30 am photograph of half of Ho'opūloa Village covered in lava (from Pa'a Pono Miloli'i 1984:4) 24
Figure 22. Portion of 1925 USGS Miloli'i Quadrangle..... 25
Figure 23. January 17, 1965 aerial view of project area 26
Figure 24. Portion of 1962 USGS Miloli'i quadrangle showing sites near Miloli'i..... 31
Figure 25. Site location map 35
Figure 26. Undated map of Miloli'i Beach Park showing Site 31097 retaining wall (from Pa'a Pono Miloli'i website) 36
Figure 27. Site 31097 retaining wall (view to east)..... 36
Figure 28. Site 31097 retaining wall (view to northeast)..... 37
Figure 29. Concrete pier block (view to west) 37
Figure 30. Site 31098, Segment 2 wall (view to southwest) 38
Figure 31. Site 31098, Segment 3 wall (view to south)..... 38
Figure 32. Site 31099 basketball/volleyball court (view to west) 39

Tables

Table 1. Modern Stone rings..... 5
Table 2. Significant Tsunamis in Hawai'I listed by location of source (from Loomis 1976:5) 18
Table 3. Summary of previous archaeological work 29

INTRODUCTION

At the request of Bow Engineering, Inc., on behalf of the County of Hawaiʻi, Department of Parks and Recreation, Haun & Associates conducted an archaeological inventory survey (AIS) of the 1.41 acre Miloliʻi Beach Park (TMK:[3] 8-9-004:001) located in Miloliʻi Ahupuaʻa, South Kona District, Island of Hawaiʻi (**Figure 1** and **Figure 2**). The objective of the AIS is to satisfy current historic preservation regulatory review inventory requirements of the Department of Land and Natural Resources-State Historic Preservation Division (DLNR-SHPD), as contained within Hawaiʻi Administrative Rules, Title 13, DLNR, Subtitle 13, Chapters 275 and 276, State Historic Preservation Rules (DLNR 2003).

The survey fieldwork was conducted on May 14, 2019 by Haun & Associates Project Supervisor Solomon Kailihiwa, M.S and field archaeologist Ben Seay B.A., under the direction of Dr. Alan Haun. Approximately two person days of labor were required to complete the fieldwork portion of the project. Described in this final report are the project scope of work, field methods, background information, survey findings, and significance assessments of the identified site with recommended treatments.

The current project was done in conjunction with the preparation of an Environment Assessment for improvements to the Miloli'i Beach Park facilities (**Figure 3**). These improvements consist of removing the existing comfort station and its reconstruction in a more accessible location, installing a new storage and supply system for the comfort station, creating a new accessible route connecting the comfort station with the parking area and park facilities, resurfacing and retrofitting the basketball court, and installing vehicular barriers to prevent unauthorized vehicles from accessing the shoreline and the pavilion.

Scope of Work

Based on DLNR-SHPD rules for inventory surveys the following specific tasks were determined to constitute an appropriate scope of work for the project:

1. Conduct background review and research of existing archaeological and historical documentary literature relating to the project area and its immediate vicinity--including examination of Land Commission Awards, *ahupuaʻa* records, historic maps, archival materials, archaeological reports, and other historical sources;
2. Conduct a high intensity, 100% pedestrian survey coverage of the project area;
3. Conduct detailed recording of all potentially significant sites including scale plan drawings, written descriptions, and photographs, as appropriate;
4. Conduct limited subsurface testing (manual excavation) at selected sites to determine feature function;
5. Analyze background research and field data; and
6. Prepare and submit Final Report.

Project Area Description

The project area comprises the Miloliʻi Beach Park, a 1.41 acre recreational facility operated by the County of Hawaiʻi. The park contains a covered pavilion, a basketball/volleyball court, parking areas, a restroom, a catchment tank, a pump house, and firepits. The extent of the park is depicted in **Figure 4** and in **Figure 25** in the Findings section of this report. The coastal portion of the park consists of a rocky coastal escarpment and a large tidal pool. According to Farber and Associates (2011:53), the pavilion is an open air building known as the Miloli'i Hālau; an 80 ft by 40 ft structure that, "...is the only public facility in the community that is covered and can accommodate large groups for meetings, gatherings, and events." The pavilion is depicted on the cover of this report.

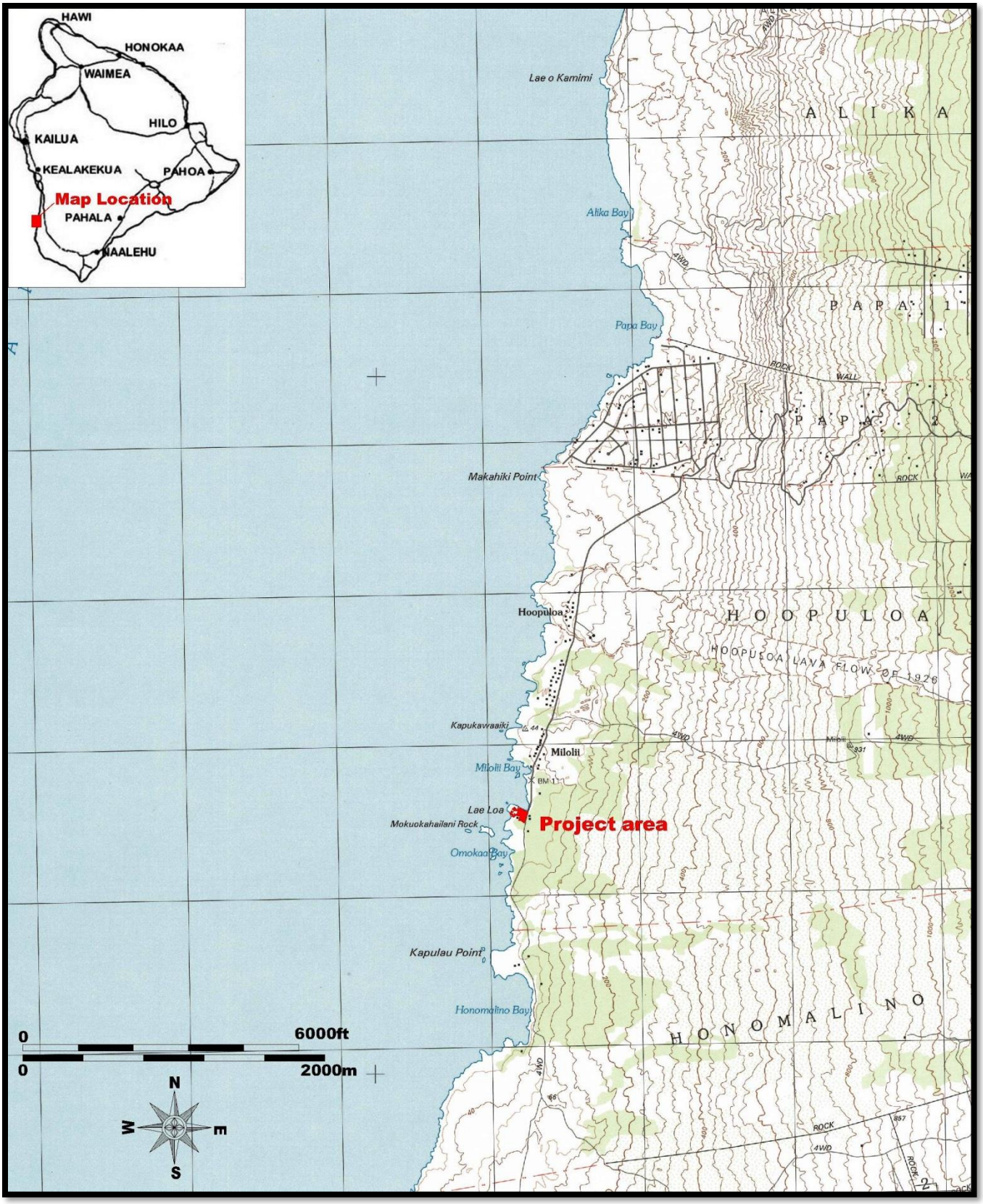

Figure 1. **Portion of 7.5' 1998 USGS Miloli'i Quadrangle showing project area**

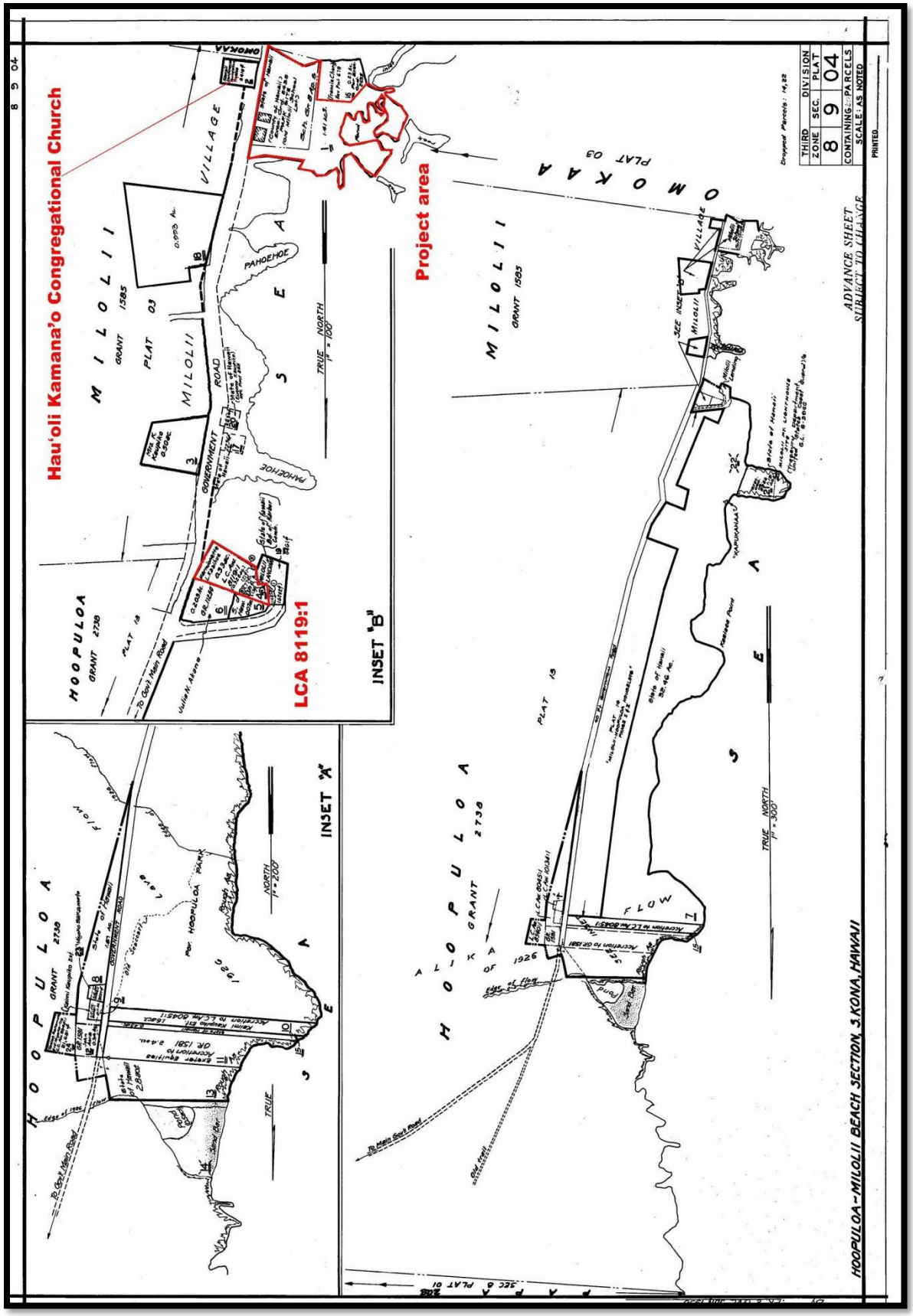

Figure 2. Tax Map Key 8-9-004 showing project area

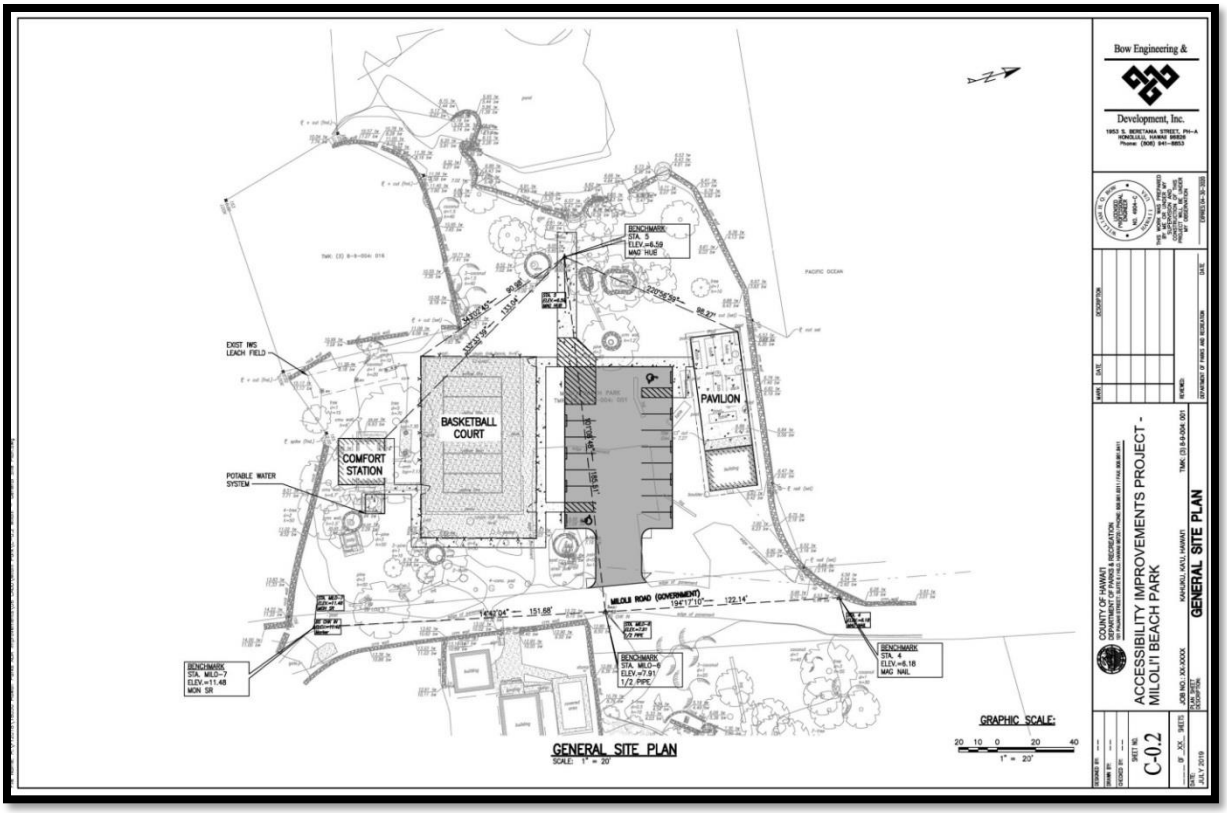

Figure 3. Proposed developments in the Miloli‘i Beach Park

Figure 4. January 2013 aerial view of project area (from Google Earth)

Park vegetation consists of Ironwood (C*asuarina equisetifolia*) *and milo* (*Thespesia populnea*) trees, coconut palms (cocos nucifera), *noni* (*Morinda citrifolia*), and night-blooming cereus (*Hylocereus undatus*). There are a series of modern stone rings scattered throughout the project area. These rings are constructed of stacked and mortared boulders and cobbles, labeled as "A" through "H" on **Figure 25**.

The rock rings are summarized in **Table 1** and range in length from 3.1 to 5.75 meters, in width from 2.1 to 4.3 meters and in height from 0.3 to 0.5 meters. The majority of these features (Features A-D, G and H) are built around the bases of ironwood trees, likely to protect them from erosion (**Figure 5** through **Figure 8**). Feature E contains a wooden sign reading "Miloliʻi Last Fishing Village in Hawaiʻi Nei" (**Figure 9**) and ornamental plants including "Moses in the cradle" (*Tradescantia spathacea*) and a foxtail palm (*Wodyetia bifurcate*). Feature F is a collapsed planter surrounding a stump (**Figure 10**).

Table 1. Modern Stone rings

Feature	Type	Shape	Length (meters)	Width (meters)	Height (meters)	GPS Coordinates		Haun & Associates field no.
						Easting	Northing	
A	Planter around ironwood	Circular	4.3	4.3	0.45	194188	2123537	1231.11
B	Planter around ironwood	Oval	3.85	2.1	0.45	194192	2123544	1231.12
C	Planter around ironwood	Oval	5.75	4.15	0.45	194194	2123549	1231.13
D	Planter around ironwood	Circular	3.1	3.1	0.45	194203	2123545	1231.14
E	Planter with sign and ornamental plants	Oval	4.15	3.8	0.45	194231	2123528	1231.8
F	Collapsed planter around stump	Oval	3.2	2.9	0.5	194227	2123517	1231.5
G	Planter around ironwood	Circular	3.2	3.2	0.3	194226	2123508	1231.6
H	Planter around ironwood	Circular	3.3	3.3	0.45	194217	2123497	1231.3

The physical characteristics of the general project area vicinity are described by Farber and Associates (2011) as follows:

> The present coastal village of Miloli'i is located on the relatively flat Kapalilua coastal plain. The three bays in the immediate area, Hoʻopūloa Bay, Miloli'i Bay, and Omokaʻa Bay, offer little or no protection from ocean waves and surge. Shoreline features in the community include a black sand beach at Hoʻopūloa Bay; the broad, gently sloping lava flows extending into the sea between Hoʻopūloa Bay and Miloli'i Bay; and the shallow and exposed lava platform reefs extending from Miloli'i Bay to Omokaʻa Bay. The 1926 lava flow dominates the coastline on the Hoʻopūloa side of the community. The other flows date from prehistoric times. (Farber and Associates 2011:15)

The soil in the project area is comprised of rough broken land. This soil type is characterized by Sato et al. (1973:119) as being, "...located in very steep areas often broken by intermittent drainage channels. It is characterized by 20 to 60+ inches of undefined soils over soft weathered rock." It has a rapid runoff and an active erosion. It is classified as suitable for watershed and wildlife habitat. The underlying lava was deposited from 1,500 to 3,000 years ago from Mauna Loa Volcano (Wolfe and Morris 2001:11 and Sheet 3).

Annual rainfall in the vicinity of the project area ranges from 750 to 1,350 mm (29 to 53 inches; Giambelluca et al. 2013). The mean average temperature in this general area is approximately 72.5 degrees F (usclimatedata.com). There are no natural water sources present in the project area; although a catchment tank is situated in the southeastern corner of the park.

Figure 5. Feature A modern planter (view to west)

Figure 6. Feature B and C modern planters (view to west)

Figure 7. Feature D modern planter (view to north)

Figure 8. Feature G modern planter (view to east)

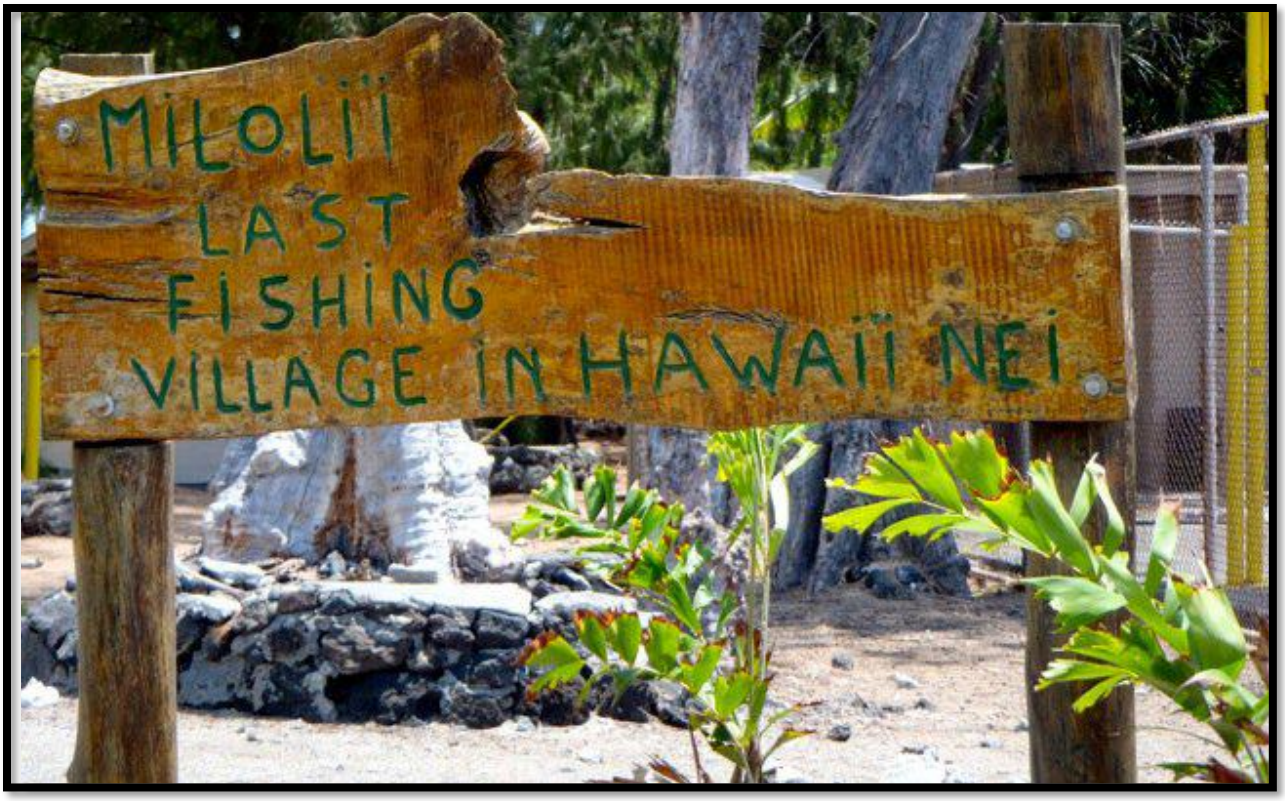

Figure 9. Wooden sign in Feature E planter (from Watson and Farber 2012)

Figure 10. Feature F collapsed modern planter (view to west)

Much of the information in this report was obtained from the *Pa'a Pono Miloli'i;* an organization formed by a number of the families with ties to Miloli'i Village. *Pa'a Pono Miloli'i* maintains a website (paaponomilolii.org) which provides a wealth of information on the current project area and surrounding village. According to Maly and Maly:

> Many of the native families of the Kapalilua region continue to practice fishing and working the land as their *kūpuna* did before them. The *kūpuna* in the community today, see that many changes in the health and well being of the land, ocean, and their families have occurred. This concerns the *kūpuna* and some of their family members. One area in which change is most notable is in the handing down of knowledge of the fisheries, native techniques of stewardship for them, and the practices of sustaining one's family through a healthy relationship with the ocean and land. (Maly and Maly 2004:41)

Methods

Archival research was conducted at the Hamilton Library Hawai'i and Pacific Collection at the University of Hawai'i at Manoa, the University of Hawai'i at Hilo Hawaiian Collection, the Land Survey Office and the Archives Division of the Hawai'i Department of Accounting and General Services, the Bishop Museum Archives, the State Historic Preservation Division library in Hilo, the State Survey Division, and the Hawai'i State Public Libraries in Honolulu and Hilo.

The project area was surveyed with crew members spaced at 5.0 meter intervals. The ground surface visibility was excellent. The identified features were flagged with pink and blue flagging tape and a detailed plan map of the park, obtained from Bow Engineering & Development, Inc. was annotated with descriptive information (**Figure 25** in Findings section). The features were photographed and standardized site and feature forms were prepared. No subsurface testing was conducted and no cultural material was recovered for analysis.

ARCHAEOLOGICAL AND HISTORICAL BACKGROUND

Historical Documentary Research

The project area is located in the *ahupua'a* of Miloliʻi in the district of South Kona. This *ahupua'a* extends from the shoreline at Miloliʻi Bay inland more than 3.5 miles to approximately 2,050 ft elevation (**Figure 11**). It is bordered on the north, east and a portion of the south side by Hoʻōpūloa and by Omokaʻa Ahupuaʻa on the remainder of the south side. According to Pukui et al. (1974) cited on the *Nā Puke Wehewehe ʻŌlelo Hawaiʻi* website (Wehewehe.org) Miloliʻi is literally translated as a "fine twist" in reference to an expert sennit twister from the area who created cordage from olanā bark that was used to make fishing nets. An alternative translation for Miloliʻi is "small swirling" in probable reference to ocean currents in the area.

The community of Miloliʻi represents one of the more traditional fishing villages in Hawaiʻi. Miloliʻi Village is described by Farber and Associates (2011) as follows:

> Established as a settlement dating back to the early Polynesian seafarers from the South Pacific, Miloliʻi families have been fishing the offshore and nearshore waters for generations. The village has about 200 residents and 50 single-family homes. The majority of the residents are Native Hawaiian...The Miloli'i community lies in the shadow of its most dominant geologic feature, the vast southwest slope of the 13,000-foot Mauna Loa volcano. Eruptive lava flows from Mauna Loa have continually influenced the area. Since 1832, the volcano has erupted forty times. Eight flows have traversed the slopes into North and South Kona, and four reached the ocean (1859, 1919, 1926, and 1950). The 1926 flow destroyed the fishing village of Hoʻopūloa adjacent to Miloli'i and covered that settlement with 'a'a lava..
>
> The present coastal village of Miloli'i is located on the relatively flat Kapalilua coastal plain. The three bays in the immediate area, Hoʻopūloa Bay, Miloli'i Bay, and Omokaʻa Bay, offer little or no protection from ocean waves and surge. Shoreline features in the community include a black sand beach at Hoʻopūloa Bay; the broad, gently sloping lava flows extending into the sea between Hoʻopūloa Bay and Miloli'i Bay; and the shallow and exposed lava platform reefs extending from Miloli'i Bay to Omokaʻa Bay. The 1926 lava flow dominates the coastline on the Hoʻopūloa side of the community. The other flows date from prehistoric times. (Farber and Associates 2011:15)

Groza et al. (2010) provide a comprehensive discussion of historical background research conducted for the general project area vicinity. Much of the following is summarized from their report. The project area is located in a traditional sub-district of South Kona called Kapalilua. According to Maly and Maly, this sub-district, "extends from the Keālia-Hoʻokena section of Kona to Kaulanamauna, situated on the Kona boundary of Kaʻū, and includes the lands of Pāpā, Hoʻōpūloa and Miloliʻi (2003:1). According to Clark, Kapalilua translates as "the double cliff" and references a two-sided cliff that has one cliff facing seaward and one facing to the north (2001:164). The extent of Kapalilua is presented in **Figure 12**.

The Kapalilua area is cited in a mythological reference to preparations for an invasion of Hawaiʻi by Chief Kamalalawalu of Maui. According to Fornander, Kamalalawalu's son Kauhiokalani (or Kauhiakama) was sent to Hawaiʻi to determine the population of the island. "Kauhiakama thence traveled on from there to Kona Kapalilua, at the boundary of Kaʻu and Kona, not meeting many people" (cited in Groza et al. 2010:24).

Fornander also states that Kapalilua was given to Napunanahunui-a-Umi, daughter of Umi, and that these lands were held by her descendants until the arrival of Kamehameha I (1885:300). Kamehameha's love of ʻ*ahi* fishing

Figure 11. Ahupua' a boundaries and Land Commission Awards in Miloli' i Ahupua' a

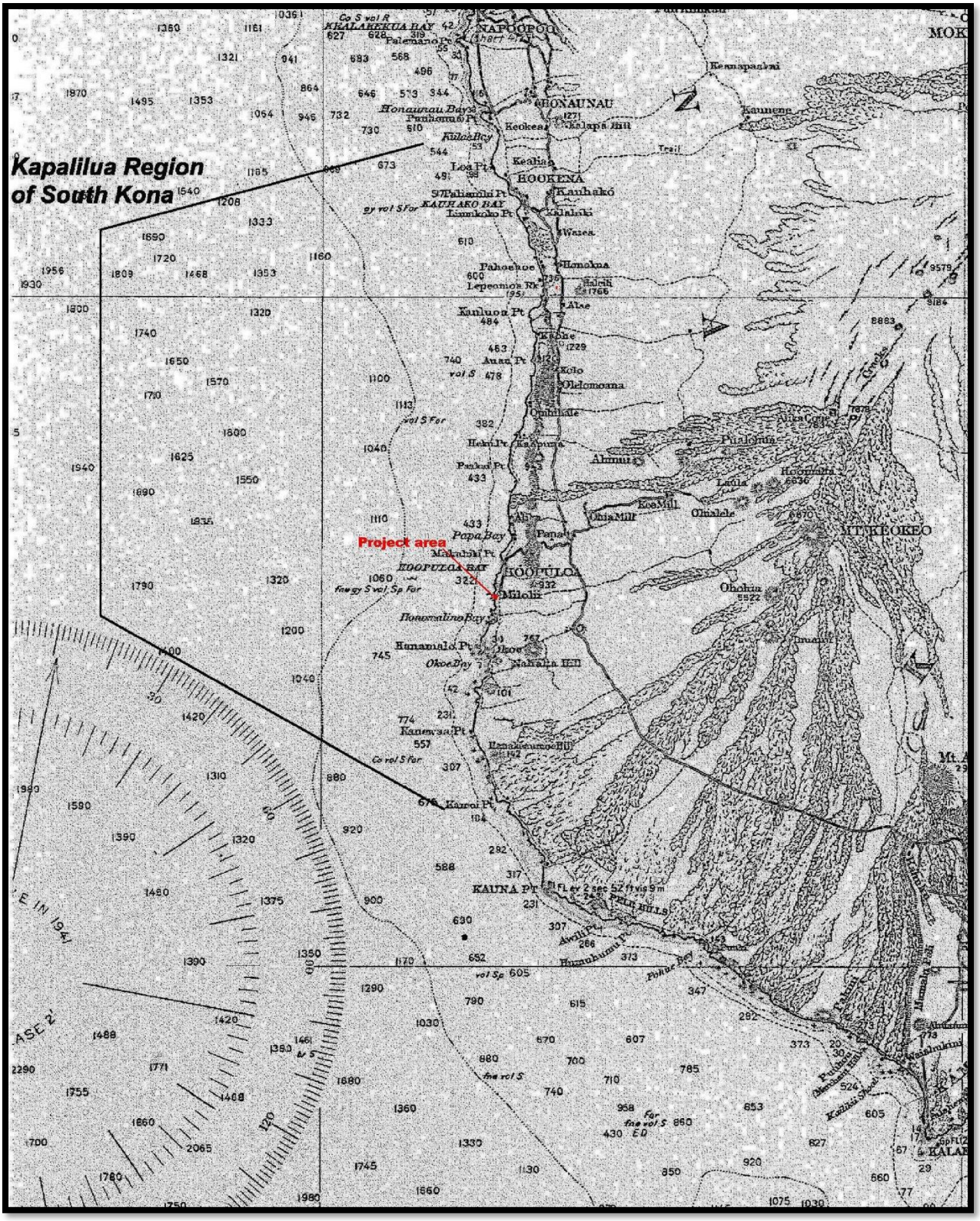

Figure 12. Map of Kapalilua Region (from modified from Maly and Maly 2003:2)

apparently brought him to the Kapalilua area. According to Kamakau, "If word was brought that *'ahi* were plentiful at Kalae [South Point], off went the chief [Kamehameha] to the *'ahi* fishing grounds, and he fished also at Kaulana, Ka'iliki, Pohue, Na-pu'u-o-Pele, Kapalilua, and at other places along the coast" (Kamakau 1961:203). During the late prehistoric/early historic period, Kapalilua was controlled by Keawe-a-Heulu, "his estates were the lands of Kapalilua, Kaawaloa and Kealakekua" (*ibid*.310).

Kamakau reports that the lands of Kapalilua were given to a displaced Maui chief, Keawe-a-heulu, for his assistance to Ka-lani-'opu'u during battles with Ka-hekili between 1777 and 1779 (1961:310). During this period, "…Ka-lani-'opu'u returned to Hawai'i to see Captian Cook, called Lono, all the chiefs returned with him to Hawai'i, and Ke'e-au-moku also left Hana to live at Honokua in Kapalilua, and later moved westward with his wife and children to Honomalino and Miloli'i" (*ibid*.:385).

In 1782, Kau chiefs bearing the corpse of Ka-lani-'opu'u changed their plans to bury him in Kailua when they reached Kapalilua and learned that Kamehameha had arrived at Ke'ei (I'ī 1959:13). I'ī traveled to Kau in 1843 to solve a dispute between Catholics and Protestants on behalf of the government. He was assisted by residents of Kapalilua on his trip from Kahuku to Kainaliu (1959:169). In 1853, I'ī, traveling with Chiefess Victoria Kamamalu stopped at Pāpā in Kapalilua where they learned of the outbreak of a small pox epidemic "about 10 ahupua'a away from Pāpā" (I'ī 1959:171).

In the 1840s, political acts of the Hawaiian Kingdom government would change the land tenure system in Hawai'i. All lands were segregated into one of three categories: "Crown Lands" owned by the occupant of the throne, "Government Lands" controlled by the state, and "*Konohiki* Lands" controlled by the chiefs; and "were all subject to the rights of native tenants" (Chinen 1958:29, Beamer 2014:143). In 1846, King Kamehameha III appointed a Board of Commissioners commonly known as the Land Commissioners, to "confirm or reject all claims to land arising previously to the 10th day of December, AD 1845." Notices were frequently posted in *The Polynesian* (Moffat and Kirkpatrick 1995); however, the legislature did not acknowledge this act until June 7, 1848 (Chinen 1958:16; Moffat and Kirkpatrick 1995:48-49) and the act is known today as *The Great Māhele*. In 1850, the Kingdom government passed laws allowing foreigners to purchase fee simple lands (Speakman 2001:91). The Kuleana Act of 1850 allowed for fee simple land ownership by commoners.

During the *Māhele,* four Land Commission Award (LCA) claims were made for parcels within Miloli'i Ahupua'a (LCA 8119, 8543, 9896, and 9897; see). There are no LCA's within the project area. The Waihona 'Aina (2000) *Māhele* Database; which is a compilation of data from the Indices of Awards (Indices 1929), Native Register (NR n.d.), Native Testimony (NT n.d.), Foreign Register (FR n.d.) and Foreign Testimony (FT n.d.) provides information on the LCAs.

LCA 8119, awarded to Hu, is comprised of a parcel located along the shoreline at Miloli'i Landing to the north of the project area (Parcel 1; see **Figure 2**), and a parcel in the inland portion of the *ahupua'a* at approximately 1,300 to 1,375 feet elevation. This pattern of a coastal house lot and an associated upland agricultural parcel is seen throughout the Kona region. This coastal/upland relationship is described by Borthwick et al. (1997:10) below:

> This Mahele induced pattern reflects the traditional Hawaiian settlement pattern where permanent habitation was concentrated at the coast and subsistence oriented agricultural pursuits extend up slope in a zonal pattern based on the correlation between rainfall and elevation. Traditionally there was a continuum of utilization through the zones (Kula, Kalu'ulu, Apa'a, and Ama'u). However, because of restrictions of the Kuleana Act itself, claimants were only awarded certain specific lots. Thus, the mid-1800's settlement pattern, as evidenced by the LCA data, included permanent habitation coastal house lots with upland agricultural lots. The upland lots, however, were separated by a considerable expanse of land that had formerly (traditionally)

> been an integral part of the agricultural system which provided the necessary mix of subsistence oriented crops. (Borthwick et al. 1997:10)

The remaining three LCA's are located in the inland portion of the *ahupua'a* between 1,100 and 1,500 ft elevation. These consist of LCA 8543 to Kahoohanohano, LCA 9896 to Nahina, and LCA 9897 to Kahoa.

Groza et al. (2010) summarize information collected by Maly and Maly (2002) from a cultural study they conducted in Kapalilua lands. The historic primary residences were clustered along the coast or inland, adjacent to the highway (2002:119). Gardens associated with the inland residences were present near the highway with more extensively cultivated fields located further inland. One crop cultivated in these inland fields between the 1870s and 1920 was the narcotic drink *'awa* (*Piper methysticum*). The residential gardens were often walled to prevent grazing cattle from damaging the crops.

Historic land travel through this area was via one of two *alaloa (*road). One road followed the coastline and the other, known as Keala'ehu (the path of 'Ehu), was in the vicinity of today's Mamalahoa Highway (Maly and Maly 2004:37). According to Maly and Maly, the Keala'ehu Trail "was modified by the 1850s, with improvements continuing until the *makai* route was all but abandoned by the 1860s (*ibid*.).

In 1846, Chester Lyman, a professor from Yale University visited Hawai'i Island. Maly and Maly (2004:7) presents Lyman's account of his journey throughout the Kapalilua area, traveling along a coastal foot path between Kapu'a and Kīpāhoehoe where he hired a canoe to continue his trip to Kealakekua. The following entry describes his visit to the village of Miloli'i:

> September 3rd, 1846. …The road most of the way was no road at all, but an exceedingly blind foot path, winding in various directions among the grass and lava, and utterly impossible to follow by any but a native eye. It seemed to grow rougher and rougher, and the path was very little if any "worked" or improved by leveling and laying flat stones to step on. The country generally seemed to be formed of flows of the roughest kind of clinkery lava, the irregularities being of all sizes from pebbles to up to hillocks. The way seemed long and weary, and when the sun had disappeared behind the ocean, and the shades of night were thickening around, we had but just attained a rough eminence from which Kapua was visible still some 3 or 4 miles distant…The great advantage of traveling over clinkery lava by night is that the darkness makes the path all appear smoothe and even, and you are saved the trouble of selecting places for your feet… At 8 o'clock I reached Kapua, which is rather pleasantly situated on a cove of the sea. It is on one of the clinkery flows, and the region around is very rough. I proceeded at once to the beach, and enjoyed the luxury of a bath, after which I went to the house where I was to stop near the beach, and took my supper and made preparations for sleeping... I here for a real (12 ½ cents) bought a fine watermelon, which was delicious and refreshing…
>
> September 4th. …A mile from Kapua we passed the little village of Koa and mile or two further on, passing Honomalino, we came to Milolii, where there is an extensive and beautiful sand beach covered by a fine grove of cocoanuts. Here I took breakfast under their shade. Maly and Maly 2007:7).

Maly and Maly (2004) citing the Report of the Mission Station at Kealakekua, describe the location and condition of the churches in the project area vicinity in 1855, including one in Miloli'i Village. The churches of the South Kona Mission Station at this time were under the direction of Reverend John D. Paris.

> Since our last Annual Report our Church in S. Kona has been reorganized or divided into six branches… This arrangement while it greatly augments the labors of the Pastor or Miss. Is

> nevertheless we think, as this people are scattered over a large extent of country, & can never all meet together, greatly beneficial to them.
>
> The first of these Churches extends Geographically from Hokukano on the North to Onouli on the South… …The other two Churches one at Kaohe & the other at Milolii. The former has 101 members the latter 140. Both these Chhs [Churches] have comfortable houses to worship in. The one at Kaohe is of thatch, the one [at] Milolii is stone.
>
> These Chhs are made up of the poor of this world & of the poor of Hawaii. Most of [the] people get a lively hood principally by fishing – their villages are mostly near the sea shore on the barren lava. Their food is cultivated back from the sea shore, the distance of from three to five miles, where the land is generally fertile & with proper culture would produce abundantly…
>
> At Milolii. We have some good people & some of whom we stand in doubt. A few living epistles known & read of all men – some whose light shines more dimly & through manyclouds & others whose light is darkness… The No. of Births in this District has been greater than in the two preceding (!) years & No. of deaths. Births 81 — Deaths 57…

The Hauʻoli Kamanaʼo Congregational Church is located adjacent to the project area on the inland side of the Miloliʻi Road (see **Figure 2**). According to Paʻa Pono Miloliʻi website (http://paaponomilolii.org/the-village), the church was constructed in 1865 under the direction of Reverend Paris. An undated photograph of the church is presented in **Figure 13**.

The Paʻa Pono Miloliʻi website also describes a powerful earthquake that struck Hawaiʻi Island on February 5, 1868, producing a tsunami that hit Miloliʼi Village. The following account from Aunty Mona Kahele describes the incident:

> On February 5, 1868, there was a great tidal wave that destroyed the entire village of Miloliʼi. Although homes, canoes, fishing equipment, and other things belonging to the people were all lost, they were thankful that not one life was lost, human or animal. The people never lost hope and began living by their same patterns again. The land had extended farther out but now there was deep water there and the sea had moved inland.
>
> The little Kalawina church used to be where the pine trees are today. The church was lifted up by the waves and set down many feet from where it had stood before. (Where it stands now is only a few feet away.) Not one board was broken by the wave and everything was just the same except the foundation. The church bell rang and rang until the building settled down and everything was quiet. Only the regular sound of the waves could be heard then. Everything on the beaches was neatly cleaned.
>
> It seemed to the people like it was the end of the world for them. They were cold and hungry. To keep warm that night they all gathered closed together near where the little church was set down by the wave. They gave their most heart felt prayers of thanksgiving to God Almighty for saving their lives. Even though they were hungry, they praised the one Maker of all mankind.
>
> During their prayers, they heard voices calling and torched lights coming from ma uka. At first the people were frightened because they thought maybe it was the dead coming to claim them. They huddled together more closely to protect the women and children. But as the lights came nearer and the voices kept calling out to the people, some of them recognized the voices of their ʻohana who lived up mauka.

Figure 13. Undated photograph of Hauʻoli Kamanaʼo Congregational Church (from Paʻa Pono Miloliʻi website)

> The ʻohana brought much-needed food and clothing. There was much crying, hugging, rejoicing, prayers, and thanksgiving.
>
> The eldest in the village gathered all the people before the little church with all the food and clothing which had been brought to them. He told the people to kneel down with heads bowed, then he called out to the Father Almighty to bless the things which had been brought to them, and to bless the ʻohana who had brought these gifts. He thanked Him for saving them and giving them another chance to live and flourish.
>
> From that day on, a rule was made to keep Sunday a sacred day and February 5, 1868, a day that must never be forgotten. The day must be respected and be a memorial for all to remember what water can do, and that God Almighty is much stronger. So from that day on, Sunday and the Hauʻoli Kamanaʻo church became a symbol or a shrine for the people who were there during that great tidal. (http://paaponomilolii.org/wp-content/uploads/LaElimaProgram.pdf)

The tragic events of February 5, 1868, are memorialized in a *mele* written by Aunty Elizabeth Kuahuia. The Hawaiian and English versions of this song are presented in **Figure 14**.

Table 2, obtained from Harold Loomis' (1976) *Tsunami Wave Runup Heights in Hawaii* indicates that 22 tsunamis impacted the Hawaiian Islands between 1819 and 1975. According to this table, the 1868 tsunami was generated by seismic activity in Chile, and produced large waves throughout Hawaiʻi Island, with 15 ft waves noted in Hilo. Loomis

Mele Lā ʻElima

ʻŌlelo Hawaiʻi

Lā ʻElima o Pepeluali
Waimaka heleleʻi *(heʻe nei)* i ke alanui

Paiki puʻolo paʻa i ka lima
(Maika pu olo aʻa ika lima)
Waimaka heleleʻi i ke alanui
(Ae maka hele heʻe nui i ke alanui)

HUI:
Penei pepe ʻalala nei
(He nei pepe alaʻa nei)
He huʻi maʻe ʻele kou nui kino
(Eʻu ima e hele kou nui kino)

Haʻina ʻia mai ana ka puana
He mele he inoa no Miloliʻi
(E mele he inoa no Miloliʻi)

ʻŌlelo Haʻole

The fifth day of February
Tears fell along the roadway
(Tears scattered in the street)

Bags and bundles held tightly
Tears fell along the roadway

Chorus:
The babies cry
(You there, baby crying here)
Numbing to the body
(Your whole body will ache with chills)

Tell the refrain
(The refrain is told)
A name song for Miloliʻi
(A song, a name song for Miloliʻi)

Source: www.huapala.org

Figure 14. La ʻElima (from http://paaponomilolii.org/wp-content/uploads/LaElimaProgram.pdf)

Table 2. Significant Tsunamis in Hawai'i listed by location of source (from Loomis 1976:5)

Origin of tsunami	Year	Size of waves and area affected
Chile	1819	Waves of 6 feet reported on Kona coast (probably moderate waves island-wide)
	1837	Large waves on all islands; 20 feet at Hilo
	1868	Large waves island-wide; 15 feet at Hilo
	1877	Large waves island-wide; 16 feet at Hilo
	1906	Moderate waves, 12 feet at Maalaea
	1922	Minor damage, 7 feet at Hilo
	1960	Large waves island-wide, 35 feet at Hilo
Ecuador	1906	Moderate waves on Hawaii and Maui, 12 feet at Maalaea
Japan	1896	Large 30-foot waves at Napoopoo, Keauhou, and Kanaloa, on west coast of Hawaii
	1901	Small to moderate waves west coasts, 4 feet at Hilo, house swept away at Keauhou
	1918	Small to moderate waves, 5 feet at Hilo
	1933	Moderate waves, 10 feet on Kona coast
Kamchatka	1841	Moderate waves island-wide, 15 feet at Hilo
	1923	Large waves island-wide, 20 feet at Hilo
	1952	Considerable damage to north coasts, 20-foot waves near Waimea Bay, Oahu
Aleutians	1946	Large waves island-wide, 55 feet at northeast coast of Hawaii, 53 feet north coast of Molokai, 45 feet north coast of Kauai
	1957	Heavy damage to northwest coasts, 53 feet at Haena
Alaska	1964	Moderate waves on north coasts, 16 feet at Haleiwa
Tonga	1919	Small waves except at Punaluu where 15-foot waves were reported
Local	1868	Very large waves southeast coast of Hawaii, 60 feet at Kamoamoa, 45 feet at Keauhou, 10 feet at Hilo, 5 feet at Honolulu
	1975	Southeast coast of Hawaii, 26 feet at Halape, 12 feet at Napoopoo, 8.5 feet at Hilo, <1 foot at other islands
Unknown	1869	Waves of possibly 30 feet on Puna coast

(1976:71) indicates that the Miloli'i area was impacted by tsunamis in 1946, 1957 and 1960. **Figure 15** depicts the run-up heights of these destructive waves, ranging from 2 feet in 1946, to five feet in 1957. According to Loomis (1976:4), "After the 1946 tsunami, the Tsunami Warning System was established and a group of tsunami specialists was developed who were motivated to find and record tsunami heights as well as other pertinent data on tsunamis."

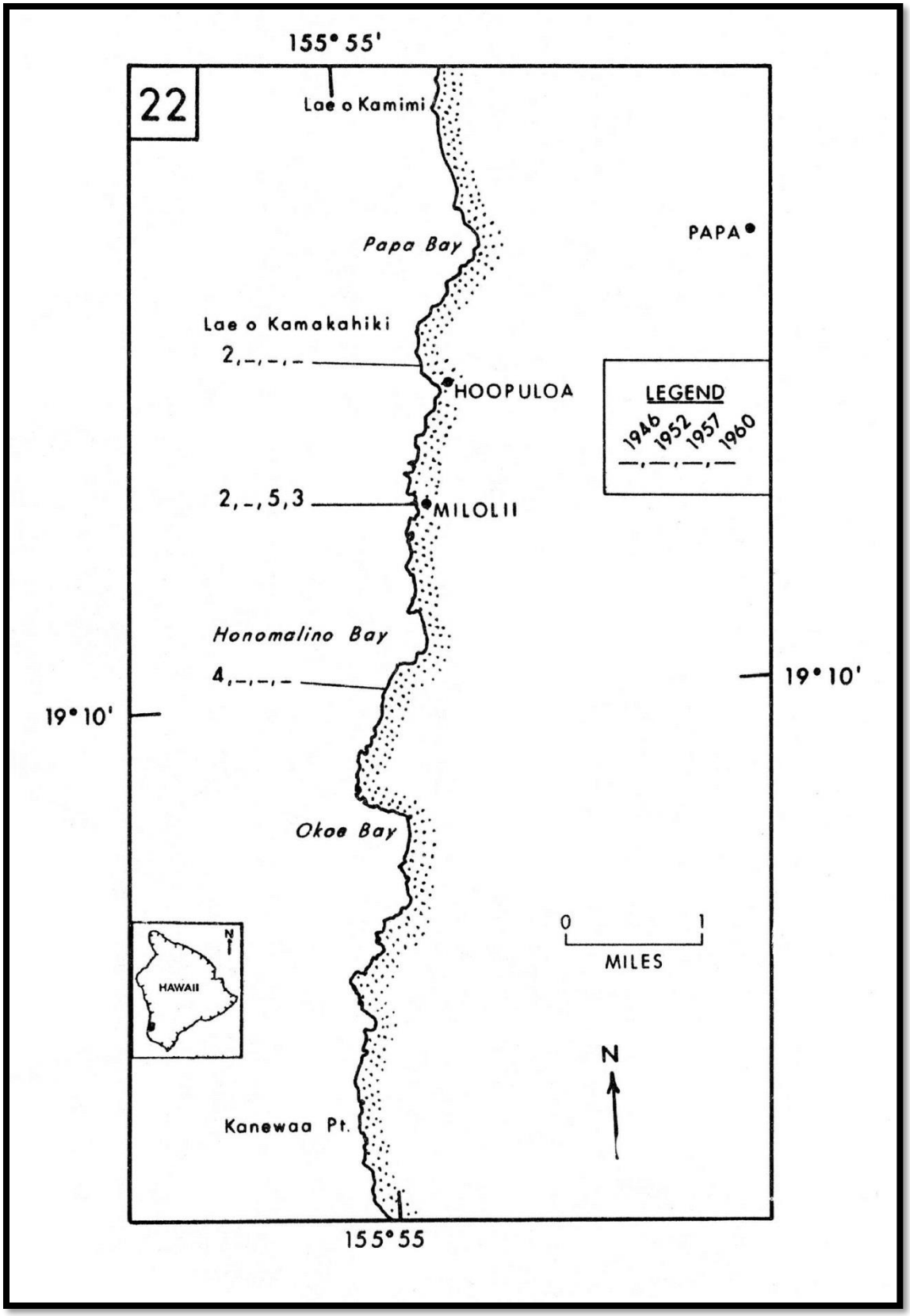

Figure 15. Tsunami run-up heights in project area vicinity (from Loomis 1976:71).

H.W. Kinney (1913) published a guide to Hawaiʻi Island. His following account describes the coastal settlements in the vicinity of the project area:

> There are a few, very small fishing villages, Alae, Alika and Papa, which are reached by poor trails from the mauka road. It is necessary to travel from Hookena mauka to the main road to Papa, and thence by either road or trail to Hoopuloa, the last steamship landing in Kona. This is another village which is dwindling in population, only a few Hawaiians and a couple of Chinese storekeepers remaining. A fair road leads across a barren a-a flow to Miloliʻi, the largest and best specimen of an exclusively Hawaiian village on the Island, which is seldom visited. It is splendidly situated by a sand beach, the sea coming right up to the yard wall, and is inhabited by a rather large population of Hawaiians, who prosper through the fishing which is almost phenomenally good...
>
> This region is seldom visited. Its chief points of interest are the remains of a *heiau*, *mauka* of the Catholic church at Milolii, some fine *papa konane* at the south end of the same village, a well preserved *kuula* (still used) where fishermen offer offerings of fruit to insure a good catch, by the beach south of Milolii, where the Honomalino Ranch fence crosses the trail; while all along the trail are smaller kuulas, and at many points the foundations of villages, where old implements may still be found. (Kinney 1913:65]

The current Miloliʻi Road, that extends along the inland side of the project area, existed as early as 1914 as depicted in Wall's Hawaiʻi Territory Survey map of the area (**Figure 16**), also obtained from the Manoa online library (http://magis.manoa.hawaii.edu). This road originates at the upper Government Road (current path of Hawaiʻi Belt Road) and extends seaward to the coast, then turning south, providing access to the villages of Hoʻōpūloa and Miloliʻi. According to Groza et al., Miloliʻi Road was paved in the 1960s during the filming of "Girls, Girls, Girls", an Elvis Presley film shot in Miloliʻi Village (2010:36). **Figure 16** also indicates that the seaward portion of Miloliʻi Ahupuaʻa was awarded to Kaleohano as Grant 1585, and that the interior portions were awarded to Kekepano as Grant 3023.

The village of Hoʻōpūloa, located to the north of the project area was destroyed by a 1926 lava flow from Mauna Loa. A series of Bishop Museum photographs, presented in a Paʻa Pono Miloliʻi (1984) assessment for the development of the Miloliʻi community depict the destruction of the village. These photographs are included as **Figure 17** through **Figure** 21 below. Apple (1987) describes the destruction as follows:

> At about 0300 H.s.t. April 18, the flow rode over the stone walls behind the village and started burning outhouses. Pigs heard squealing in a pen were released. Destruction of the village was gradual and complete. As soon as lava began falling into the sea, steam shot up in jets. Hundreds of dead fish floated along the edge of the turbulent water that spread out from the contact area of hot rock and cold ocean. Hawaiians from Miloliʻi came in their canoes and gathered the dead fish for salting and preserving. (Apple 1987 cited in Groza et al. 2010:32).

Handy and Handy (1972) describe traditional agriculture in South Kona based on historic documentary research and informant interviews in the 1920s to 1940s as follows:

> …South Kona was planted in zones determined by rainfall and moisture. Near the dry seacoast potatoes were grown in quantity, and coconuts where sand or soil among the lava near the shore favored their growth. Up to 1,000 feet grew small bananas which rarely fruited, and poor cane; from 1,000 to 3,000 feet, they prospered increasingly. From approximately 1,000 to 2,000 feet, breadfruit flourished.

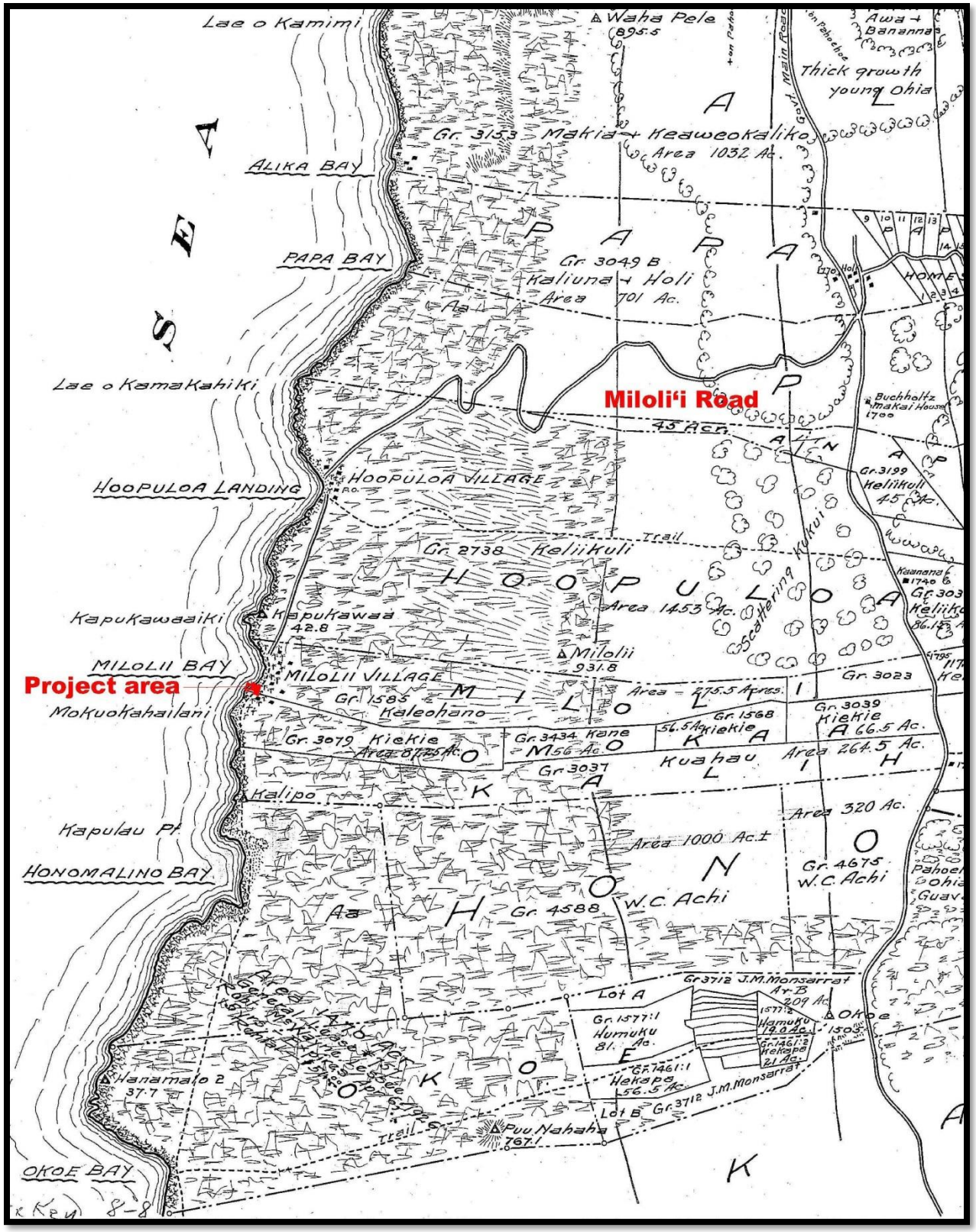

Figure 16. Portion of Wall's 1914 Map of Okoe, Honomalino, and Kipahoehoe Government Tracts

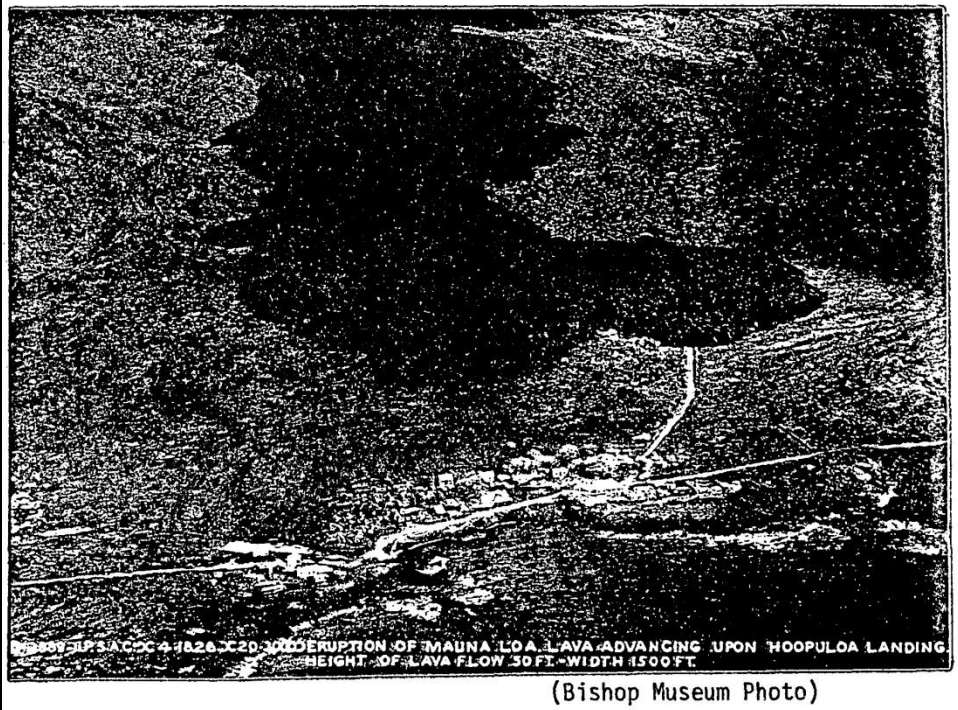

(Bishop Museum Photo)

Lava approaching the small village of Ho'ōpūloa
on the morning of April 18, 1926

Figure 17. Lava flow approaching Ho'ōpūloa Village (from Pa'a Pono Miloli'i 1984:2)

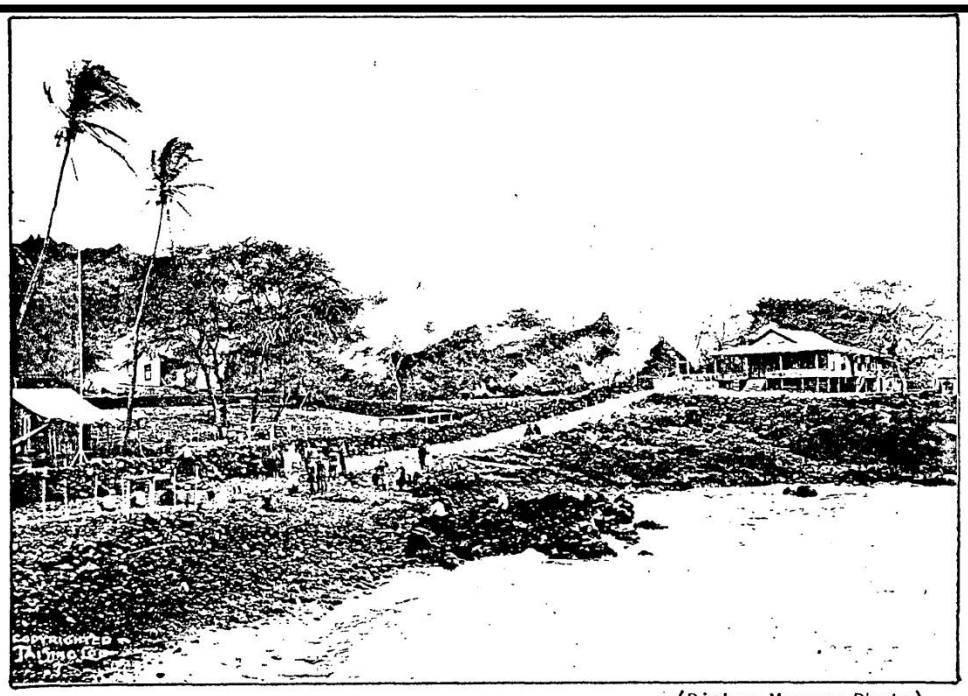

At 5:15 am the lava began entering the village (Bishop Museum Photo)

Figure 18. Lava flow entering village at 5:15 am (from Pa'a Pono Miloli'i 1984:3)

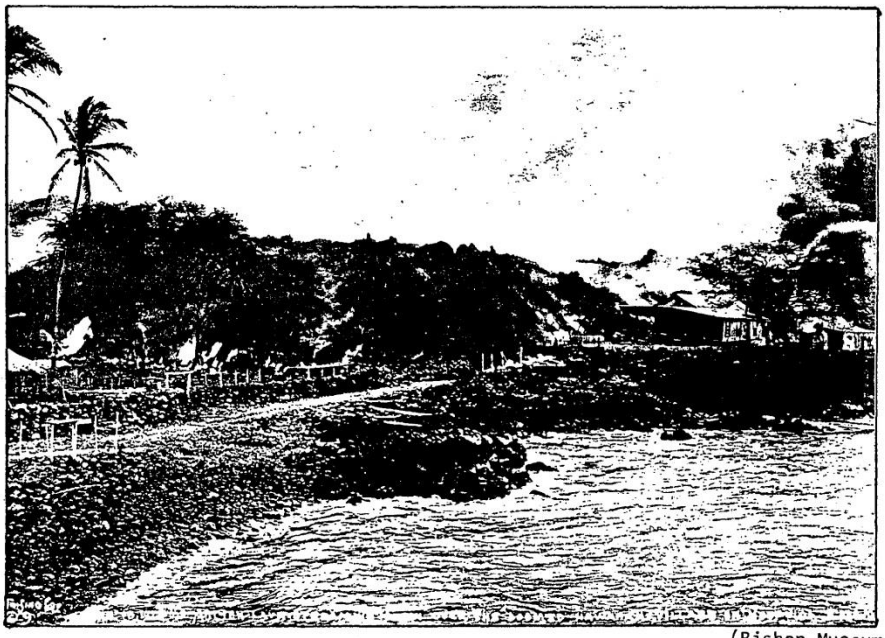

By 5:30 am homes had been destroyed and the lava was heading towards the sea (Bishop Museum Photo)

Figure 19. Houses destroyed by 5:30 am (Paʻa Pono Miloliʻi 1984:3)

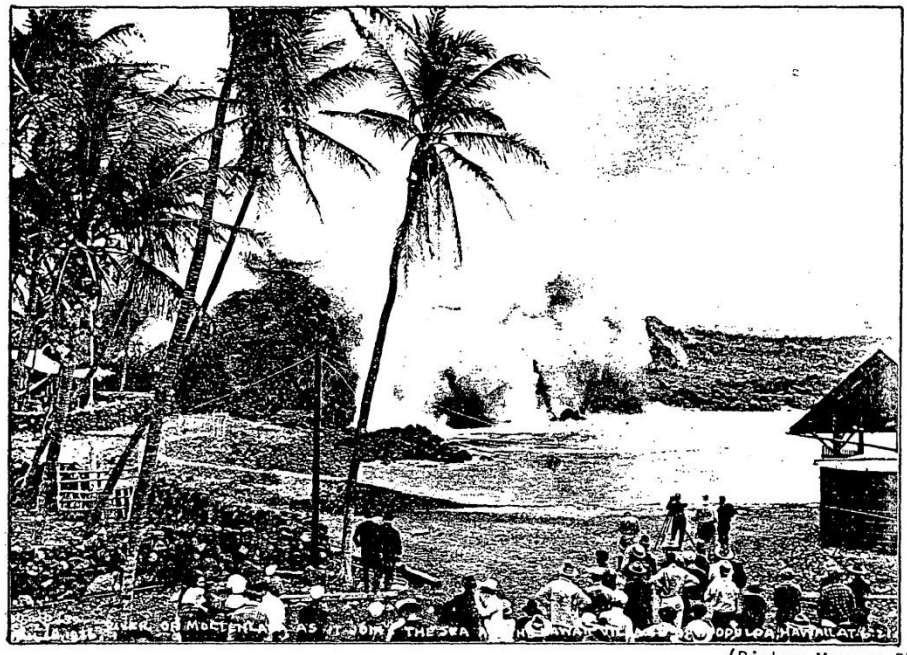

At 6:21 am the lava joins the sea and continues to destroy the village (Bishop Museum Photo)

Figure 20. 6:21 am photograph of lava entering ocean (from Paʻa Pono Miloliʻi 1984:4)

Figure 21. 6:30 am photograph of half of Hoʻopūloa Village covered in lava (from Paʻa Pono Miloliʻi 1984:4)

> Taro was planted dry from an altitude of 1,000 to approximately 3,000 feet. An old method of planting taro in Kona, described as Lakalo at Hoʻokena, was to plant the cuttings in the lower, warmer zone where they would start to grow quickly and then transplant them to the higher forest zone where the soil was rich and deep and where moisture was ample for their second period of growth, in which their corms are said to have developed to an average of 25 pounds each.
>
> At an altitude of about 2,300 feet in Kealia there was in 1931 an old-style upland taro plantation corresponding exactly to descriptions by the early voyagers, with the flourishing taro planted in twos and threes in holes in even lines, spaced about 4 feet apart, the surface covered with a mulch of dried amaʻu fern. The borders of the patches were marked by zones of rock thrown up through the field, on top of and along the sides of which were clumps of native sugar cane. Hawaiian bananas where planted here and there between the taro fields. (Handy and Handy 1972:524-525)

Handy and Handy (1972) also indicate that there were two methods of dry taro cultivation. The first is *puʻepuʻe*, which entails planting taro in stone mounds in areas with little or no soil (1972:525). Once the taro was planted in the mounds, it was covered with imported soil. The second *is kanu paʻeli*, a method utilized in areas that did contain soil. Holes to plant the soil were dug in the soil, then were covered with soil and rocks.

Figure 22 is a portion of the 1925 USGS Miloliʻi quadrangle (obtained from the University of Hawaiʻi at Manoa online library). This map depicts the Miloliʻi Road extending seaward through the area and turning to the south near the shoreline. A trail or minor road continues to the south from the end of the Miloliʻi Road. This trail continues south to where it ends in Kapua Ahupuaʻa at the Niuou Coconut Grove. A series of perpendicular trails

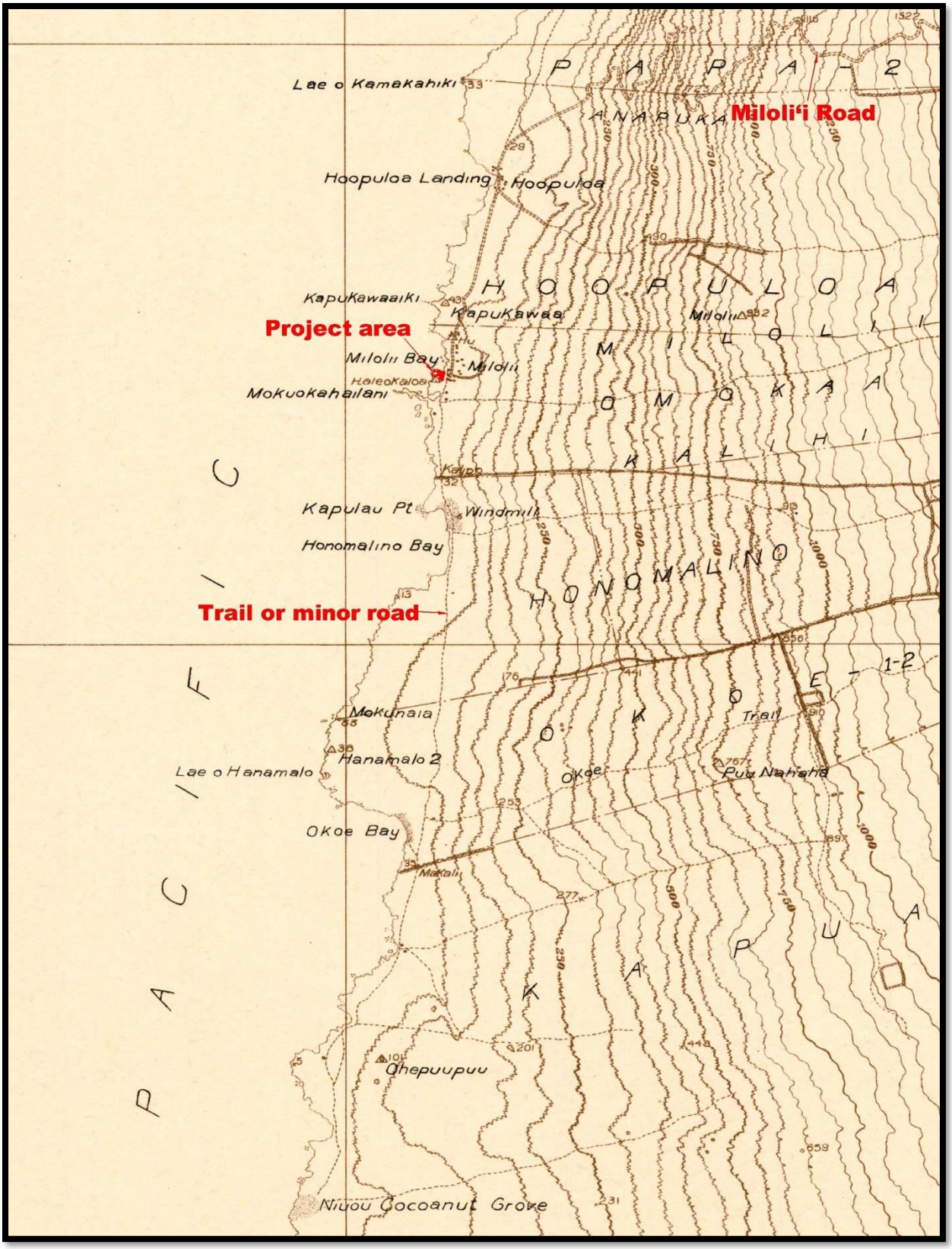

Figure 22. Portion of 1925 USGS Miloli'i Quadrangle

extend inland from this coastal trail in Omokaʻa and Honomalino Ahupuaʻa, with multiple inland/seaward trails in Kapua Ahupuaʻa. **Figure 22** also depicts a curved stone wall extending inland from the southern end of the Miloliʻi Road.

The project area comprises the Miloliʻi Beach Park. The park contains a covered pavilion (Miloli'i Halau – see cover of this report), a basketball/volleyball court, parking areas, a restroom, a catchment tank, a pump house, and firepits (see **Figure 25** in Findings section). The park is the former location of the Miloliʻi School which closed in 1966 and the land conveyed to the County of Hawaiʻi in 1969. According to Eric Ochi, Project Parks Manager for the County of Hawaiʻi, Department of Parks and Recreation, the structures from the school were removed; however the basketball court was in existence when the school was in operation. The restroom facility was constructed in late 1986/early 1987, and the halau was built before 2006.

Figure 23 is an aerial view of the project area vicinity taken on January 17, 1965 by the U.S. Geological Survey and obtained from the University of Hawaiʻi at Manoa online library (http://magis.manoa.hawaii.edu). This map depicts the outline of the school within the project area, along with the 1926 lava flow to the north, and the Miloliʻi Road.

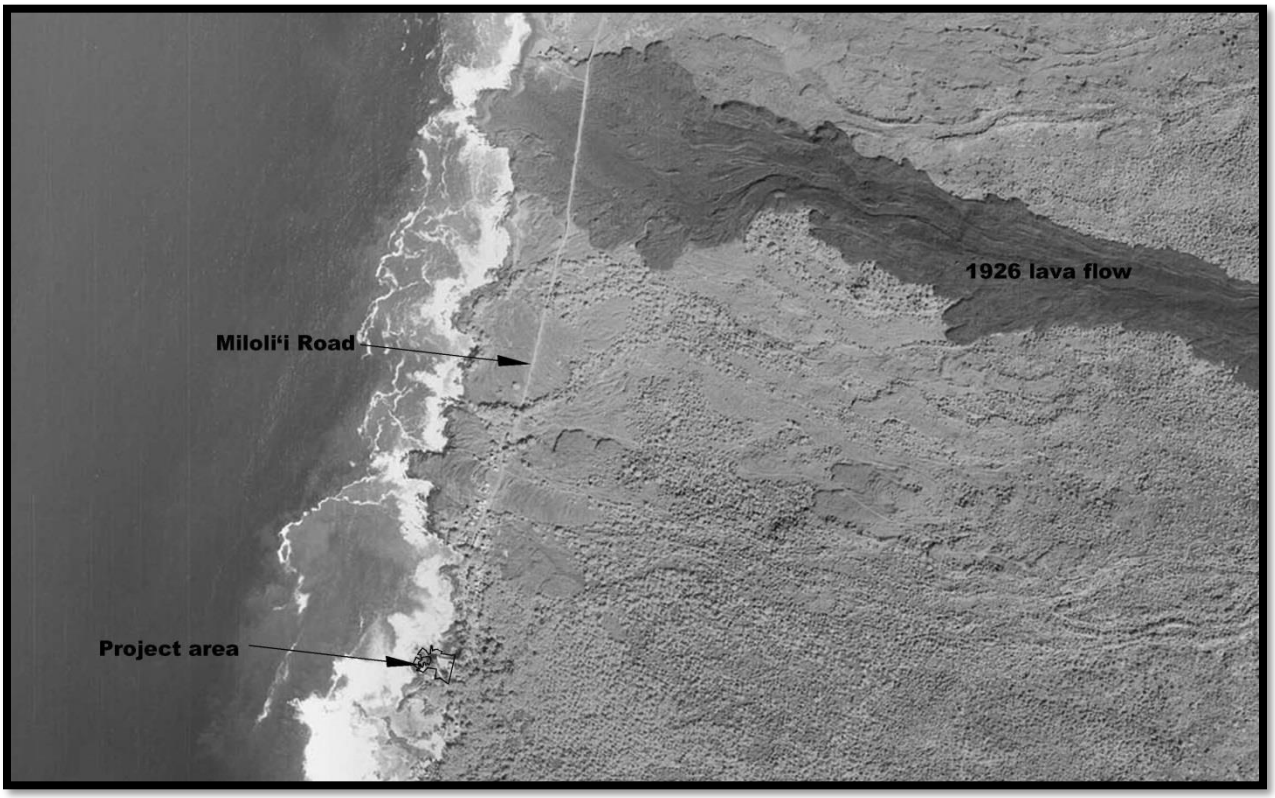

Figure 23. January 17, 1965 aerial view of project area

Previous Archaeological Work

A search of the DLNR archives indicates that at least 15 archaeological studies have been conducted in the general vicinity of the project area. The location of these studies is presented in **Figure 13.** Not included in this figure are the general studies by Thrum (1907) and Stokes (reported in Stokes and Dye 1991) which focused on major sites throughout Hawaiʻi Island, and a survey along the west coast of Hawaiʻi by Reinecke (1930). No sites were noted by Thrum in Miloliʻi; however, Reinecke (1930) made several observations about the area.

Reinecke indicates that the 1.25 miles between Papa and Hoʻōpūloa were not examined as it is rough aʻa lava, which according to locals contained no sites. At the destroyed village of Hoʻōpūloa, Reinecke states that," ...nothing is left of the original village except two walls (1930:169). Two sites were identified in the Miloliʻi area consisting of several graves and a pool (Site 63) and the district of Miloliʻi (Site 64.) These sites are described as follows:

> Site 63.
>
> The area from the Hoopuloa Flow to Milolii is old a-a flow with only a few graves at the north end and a cleft in the middle, with vegetation and perhaps a little seepage. At the north border of Milolii is a very brackish pool. (Reinecke 1930:169).
>
> Site 64.
>
> Milolii: The district of Milolii is divided, according to natives, into four divisions, Waikini, Kalaninali, Umokaʻa, and Kulini. The first two do not show up on the topographic sheet. It would be a safe estimate to allow one house site for every house now standing in Milolii. There are graves at the south end of the village, and back of the mauka houses at the northern end.
>
> There is a boulder lying on the shore of Milolii Bay in the waikini section of the village, of ordinary appearance, also called Waikini. It is credited with supernatural powers in protecting canoeists in time of storm, when they are guided back to shore by a radiance proceeding from the stone. There is the usual story of a group of sacrilegious natives carrying the stone from its place: it was found in the morning to have returned to its usual place, from which it cannot be budged by the worse storm; while the four men who carried it away each suffered some great misfortune.
>
> There is a heiau by the schoolhouse, HALEOKALOA, which I did not see, being told about it after I had left the village. A large platform in the north graveyard was also pointed out as a heiau, but no name is attached to it, the opinions of the natives are divided, and it is plainly a mere puoa.
>
> The shallow bay at the north side of Mokuokahailani Pt. was a fishpond, the breakwater now being submerged. At the head of the pond is a recently erected round platform. On the base of Mokuokahailani is an old, badly damaged platform c. 75x35, which looks like a typical old ruined heiau, but it is not. (Reinecke 1930:170)

The majority of modern archaeological investigations in the vicinity are summarized in **Table 3.** Excluded from this table is a study by Robins et al. (1994) that was not available for review. This study is summarized in Groza et al. (2010:38) and consists of an approximately 1,250-acre portion of Kapuʻa in which 108 sites including *heiau,* temporary and permanent habitations, a burial, and complexes of agricultural features and historic ranching features were identified.

The remaining projects examined more than 7,067 acres at elevations ranging from the shoreline inland to approximately 2,800 ft elevation. These projects identified 319 sites with 920 features. To aid in reconstructing settlement patterns, features were quantified by probable age and function, and the studies are ordered by elevation. Traditional Hawaiian features were categorized as habitation, agricultural, burial (including possible

burials), ritual, refuge, *ahu* and trails. Features not assignable to these categories were categorized as miscellaneous/indeterminate. Habitation sites are further subdivided into temporary and permanent for studies making this distinction.

Density values are given for sites, features, and habitation and agricultural features. The studies have identified 384 habitation features, 376 agricultural features, 39 burials, 14 refuge features, 16 ritual features, 29 trails and 82 *ahu.* The historic features were not segregated by function; although the majority of these are historic ranch walls. Overall feature density values range from 0.04 to 33.33 features per acre with an average of 6.58 features per acre.

One of the first modern archaeological investigations in the area was a reconnaissance survey of a 0.25-acre parcel located in coastal Kapuʻa conducted by Hammatt in 1980. This survey identified a paved coral surface surrounded by a stone wall. Soehren (1988) and Barrera (1989) conducted additional work at the site. Soehren's (1988) work correlated the parcel to LCA 10527:1, indicating that it had been occupied prior to the Mahele. Barrera (1989) excavated a test unit in the pavement and extensively photographed the site. A variety of midden and historic artifacts were recovered from the excavation.

Between 1982 and 1988, Paul H. Rosendahl, Ph.D. Inc. (PHRI) conducted a series of archaeological investigations of the 6,700–acre Farms of Kapuʻa project. This parcel extended across the width of the Kapuʻa Ahupuaʻa from the coast to 1,100 ft elevation. A reconnaissance of the area was conducted by Rosendahl (1983), with a subsequent addendum study undertaken the following year (Rosendahl 1984). The survey covered 100% of the coastal zone and a 15% sample of the inland portion, intended to examine areas of variable environment and topography. Forty-six sites were identified during this project.

In 1987 and 1988 Haun and Walker (1988) conducted a more intensive study of the Farms of Kapuʻa area, utilizing aerial surveys and more extensive ground survey. An additional 251 sites were identified during this study. The combined projects conducted by Rosendahl (1983, 1984) and Haun and Walker (1988) identified a total of 297 sites with 951 component features. The 951 features consisted of 331 agricultural features, 278 temporary habitations, 69 habitations, 14 refuge features, 16 religious features, 39 burials or possible burials, 25 trails, 82 cairns, 59 quarries, 6 livestock control features, 23 indeterminate features and 9 miscellaneous features comprised of tool preparation (2, recreation (1), water source (4), rock art (1) and storage (1). The majority of the features are pre-contact in origin, although the livestock control and storage features are historic. Testing at an inland cave site yielded charcoal and volcanic glass that was dated between AD 800 to AD 1,100.

In 1995, Barrera (1995) conducted an inventory survey of a 0.18 acre parcel in Honomalino Ahupuaʻa at approximately 100 ft elevation. The survey identified one site with two features consisting of a midden deposit (Feature A) and a stone wall (Feature B). The midden deposit was interpreted as a pre-contact habitation loci and the wall as a portion of an historic LCA enclosure.

In 2005, PHRI undertook an archaeological assessment survey and cultural impact assessment of the c. 15,000-acre South Kona Watershed Irrigation System Project (Rosendahl 2006). This area extends from Pāpā 1 in the north to Kapuʻa in the south and varied in elevation from 800 to 3,000 ft. The 15,000-acres were sample surveyed using a series of fourteen 100 ft wide water pipeline transects that extended through the area. The survey identified eight sites with 22 features including livestock control walls, permanent habitations, a road and agricultural features. According to Rosendahl, the area has been, "extensively modified and developed during historic times, as evidenced by the extensive current agricultural use of the land and the findings of the archaeological assessment field work" (2006:ii).

Table 3. Summary of previous archaeological work

Author	Ahupuaʻa	Study type*	Elevation (ft)	Acreage	No. of sites	Sites per acres	No of features	Features per acre	Habitation features	Habitation features per acre	Permanent habitations	Temporary habitations	Agricultural features	Agricultural features per acre	Refuge	Ritual	Burial/ possible burial features	Trails	Ahu	Misc. / Indeter.	Historic features
Hibbard (1993), Haun and Henry (2015, 2018)	Pāpā 2	RN, AIS, SPP	5-80	5.97	4	0.67	24	4.02	19	3.18	19							4			1
Rosendahl (1983, 1984), Haun and Walker (1988)	Kapuʻa	RN	10-1100	6700	286	0.04	792	0.12	347	0.05		278	331	0.05	14	16	39	25	82	90	7
Hammatt (1980), Soehren (1988), Barerra (1989)	Kapuʻa	RN	20	0.25	1	4.00	2	8.00													2
Barrera (1995)	Honomalino	AIS	100	0.18	1	5.56	2	11.11	1	5.56											1
Rosendahl (2006), Grozer et al. (2010)	Papa 1-2, Anapuka, Hoʻopuloa, Miloliʻi, Omokaʻa, Kalihi, Honomalino, Kapuʻa	AIS	1080-2800	212	15	0.07	46	0.22	3	0.01	2	1	15	0.07							28
Scheffler (2012)	Papa 1-2	AIS/SPP	2340-2320	1.75	1	0.57	1	0.57													1
Scheffler et al. (2012)	Papa 1-2	AIS	2400-2600	122	3	0.02	5	0.04													5
Haun and Henry (2013)	Papa 2	AIS	1280-1385	25.62	7	0.27	47	1.83	14	0.55	14		30	1.17							3
Rechtman (2000)	Kapuʻa	AIS	1200	0.03	1	33.33	1	33.33													1
			Total/average	**7067.8**	**319**	**4.95**	**920**	**6.58**	**384**	**1.87**	**35**	**279**	**376**	**0.43**	**14**	**16**	**39**	**29**	**82**	**90**	**49**

** - RN = Reconnaissance Survey , AIS - Archaeological Inventory Survey, SPP- Site Preservation Plan*

The South Kona Watershed Irrigation System project area was subsequently subjected to an archaeological inventory survey by CSH in 2008 (Groza et al. 2010). This project included the same transect corridors previously examined by Rosendahl (2006) and additional sections of the proposed irrigation water distribution system, totaling approximately 212 acres. This survey documented the 8 previously identified sites and 7 newly identified sites with 24 features. The features consisted of 28 historic and 18 pre-contact/early post contact features. The historic features consist of four sections of the Old Mamalahoa Road and 24 historic livestock control walls. The remainder are comprised of 15 agricultural features, one temporary habitation and two permanent habitation features. Three non-cultural lava tubes and a cave were also identified.

Rechtman (2000) undertook an inventory survey of a small (40 ft by 40 ft) area for a cell tower in Kapuʻa Ahupuaʻa at approximately 1,200 ft elevation. The parcel was located in an active macadamia nut orchard. No sites were present in the parcel although an historic stone wall situated on the boundary between Kapuʻa and Okoe Ahupuaʻa was noted.

In 2012, Scheffler et al. (2012) conducted an inventory survey of 122 acres in Pāpā 1 and 2 at elevations ranging from approximately 2,390 to 2,640 ft. This survey identified an historic ranch wall, a complex of three historic agricultural features and an historic enclosure interpreted as a possible camp or agricultural exclosure. Scheffler (2012) also documented an historic *ahupuaʻa* boundary wall (Site 28991) located on the land division between Pāpā 1 and 2 at approximately 2,250 to 2,420 ft. This project also included a preservation plan for the wall.

Haun & Associates conducted an inventory survey of a 25.62 acre parcel in Pāpā 2 (Haun and Henry 2013). The parcel is located on the south side of Miloliʻi Road at elevations ranging from approximately 1,280 ft to 1,385 ft. Archaeological Consultants of the Pacific, Inc. (ACP) had conducted a survey of the same parcel in 2012; however the work was never reported because of the death of the firm's owner and principal archaeologist, Joseph Kennedy. The survey identified five single feature sites and two site complexes. The feature functions consist of pre-contact agriculture (n=30), permanent habitation (14) and historic livestock control (3).

A 5.97 acre parcel in coastal Pāpā 2 was examined in 1993 during a field inspection by the DLNR-SHPD (Hibbard 1993). The inspection was conducted in response to permit violations incurred during the April 1993 construction of a concrete boat ramp along the coastline. This project documented 13 features interpreted as elements of the Site 4185 Pāpā Bay Complex, consisting of enclosures (Features 1, 9, 10), a mound and platform (Feature 2), a terraced platform (Feature 3), terraces (Features 4 and 6), a lava blister (Feature 5), a boulder alignment (Feature 7), a wall (Feature 8), two pavements (Features 11 and 12) and a steppingstone trail (Feature 13). This parcel was subsequently subjected to an AIS by Haun and Henry (2015), who relocated the 13 features of Site 4185, along with a stone wall along the boundary between Pāpā 1 and 2 Ahupuaʻa, a pre-contact habitation platform with evidence of historic use, and a road or trail. A Site Preservation Plan was subsequently prepared for the parcel by Haun and Henry (2018).

Previous Archaeological Work in Project Area Vicinity

According to information presented by Farber & Associates (2011) in an environmental assessment for the Miloli'i Community Enrichment and Historical Center, the project area and surrounding vicinity were surveyed between 1973 and 1974 during the Statewide Inventory of Historic Places Survey. Five sites were reportedly identified in the area, consisting of the following:

- Magoon House – a unique example of a small wooden "Kona House" built in the late nineteenth century of the area.
- St. Peter's Catholic Church - a fine example of this architectural style. The Church was built in 1932 by Father Steffen to replace an earlier St. Peterʻs destroyed by the 1926 lava flow.
- Apo House - an example of typical architecture of older houses in the Miloli'i District.

- Miloli'i School - an example of this architectural style.
- Hau'oli Kamaha'o Congregational Church - an example of architectural style with historical significance. The church was built about 1887 and is an excellent example of early missionary wood construction.

Haun & Associates contacted SHPD regarding these sites; however, little information is available. SHPD GIS Specialist Michael Wahl consulted the State's GIS database, DocuShare, the Historic Hawai'i Foundation website, the Bishop Museum website, and old State Register files. No corresponding SIHP site numbers were found for the five sites.

Mr. Wahl did provide an annotated portion of the 1962 USGS Miloli'i quadrangle that depicts a large area designated as Site 4183 (**Figure 24**). This site potentially corresponds to the Site 64 Miloli'i District identified by Reinecke (1930:170). This map also shows Site 7352 which is in the location of the Hau'oli Kamaha'o Congregational Church.

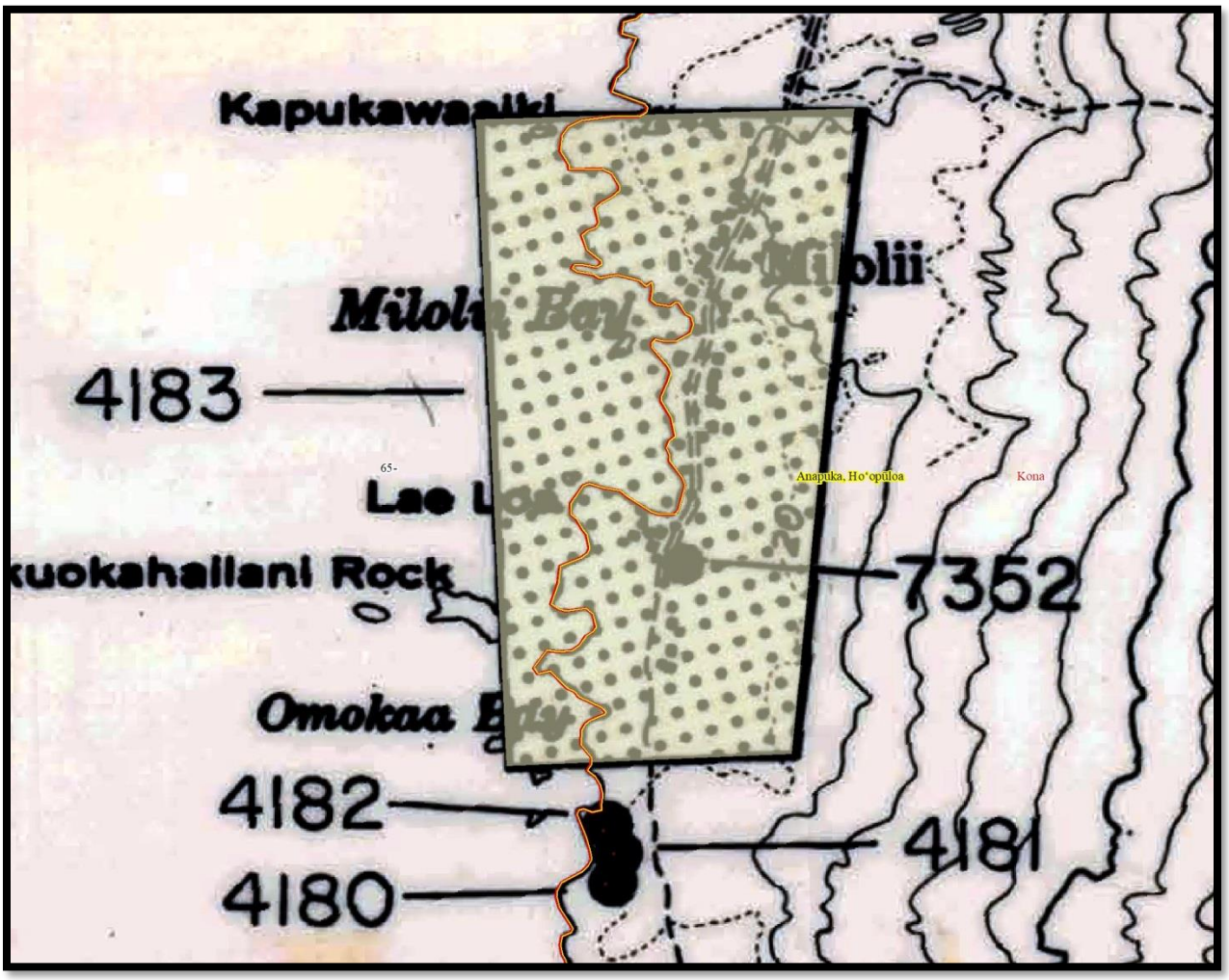

Figure 24. Portion of 1962 USGS Miloli'i quadrangle showing sites near Miloli'i

Mr. Wahl also provided an application form for the construction of a house on the Hau'oli Kamaha'o Congregational Church property across the Miloli'i Road from the present project area. This form contains an entry by landowners Shirley and Amoe Casuga regarding historic sites in the area which mentions the former Miloli'i School. This entry states the following:

> The historic site I can think of is where the Milolii School used to be and is now the Milolii Park. It closed down in the year 1966, and all of the children had to go to Hookena School and Konawaena High School.

Mr. Jeff Ochi, Project Parks Manager for the County of Hawaiʻi, Department of Parks and Recreation, in an e-mail correspondence Emi Tanitomi, of Bow Engineering & Development, Inc., describes the origins of the current structures within the Miloliʻi Park. According to the following description, no remnants of the school structures exist except the basketball court.

> To the best of my knowledge, all the old structures from the when the parcel was the school grounds have been removed (out houses, wooden water tank). The comfort station that is there now was constructed in late 1986–early 1987. The community center structure was built probably early to mid 2000's (prior to 2006). Not sure if the basketball court (surface and backboards) are of concern but they were already there from when the parcel was the former school grounds. I believe that the parcel was EO'd (Executive Ordered) to the County of Hawaii in 1969. There are CRM type walls built around the bases of some of the ironwood trees, not sure when they were built, and most times it was built by the community volunteers.

PROJECT EXPECTATIONS

Based on the preceding information, limited remnants of the historic Miloliʻi School, excluding the basketball court, remain within the project area. The effects of multiple tsunamis and the historic impacts to the property by the construction and use of the school, suggests that no pre-contact archaeological sites or features will be encountered.

CONSULTATION

Kepa Maly (Maly and Maly 2003) conducted a series of oral history interviews with seven *kūpuna* raised in Kapalilua with the primary aim of examining changes in the traditional fishing practices of the region. The interviewees consisted of *Louis Kānoa Hao,* Sr. (born in 1907 at Kaʻohe, South Kona), Mrs. Mary Tom-Ahuna (born in 1899 at Kaʻalaea, Oʻahu), Hannah Waha Pōhaku Grace Kawaʻauhau-Acia (born in 1917 at Kaʻohe), Walter Keliʻiokekai Paulo (born in 1917 at Nāpoʻopoʻo in South Kona), Edward T. Kaʻanāʻanā (born in 1925, in Honolulu), Eugene Keawaiki Kaupiko (born in 1931 at Miloliʻi), and Samuel Kamuela Waha Pōhaku Grace (born in 1927 at Kaʻohe). His general findings are summarized as follows:

> Interestingly, nearly all of the interviewees commented on changes they had observed in the quality of the fisheries, and the declining abundance of fish—noting that there were significant declines in almost all areas of the fisheries, from near-shore to the deep sea. The interviewees attribute the changes to many factors, among the most notable are:
>
> • Loss of the old Hawaiian system of *konohiki* fisheries; adherence to seasons of *kapu* fisheries (managed by *ahupuaʻa* and island regions); and lack of respect for *ahupuaʻa* management systems and tenant rights.
>
> • Too many people do not respect the ocean and land—they over harvest fish and other aquatic resources, with no thought of tomorrow or future generations. It was observed that taking more than one needs, only to freeze it for later, removes viable breeding stock from the fisheries, and as a result, leads to depletion of the resources.
>
> • Sites traditionally visited by families, having been developed and/or traditional accesses blocked.

• Changes in the environment—near shore fisheries destroyed by declining water flow and increasing pollution.

• Use of modern technology—including depth gauges, GPS, and fish aggregation devises to maximize harvests—makes it too easy for fishermen to locate fish. Fishermen no longer need to have in-depth knowledge of the ocean and habits of fish, as was necessary in earlier times.

Failure of the state system to enforce existing laws, rules and/or regulations. Interviewee recommendations included, but are not limited to:

• Return to a system patterned after the old Hawaiian *ahupuaʻa*, *kapu* and *konohiki* management practices.

• Designate one day a week—historically, it was Lāpule (Sunday)—when no fishing would occur, to allow the fish to rest and regenerate. Many of the Miloliʻi vicinity fisher-people (particularly those associated with Paʻa Pono Miloliʻi), are working to have the state designate the primary *koʻa ʻōpelu* (*ʻōpelu* fishing stations) at Kaʻakuli Miloliʻi and Hoʻopuloa (all fronting the extended community of Miloliʻi), set aside as subsistence fishery management units (*koʻa*). These *koʻa* are based on the traditional fishing grounds of the native families of the land, and tied to generations of care and fishing by the same families who would manage them.

• A significant problem for the native fishermen of these *koʻa* is that outsiders, and some local residents who have focused on economic fishing, use foreign baits, which change the character of the *koʻa*; and fish in a manner that leads to depletion of the fishery.

• Enforce existing laws and *kapu*; ensure that penalties for infractions are paid. Take only what is needed, leaving the rest for tomorrow and the future. (Maly and Maly 2003:42-43)

No specific information concerning the Miloliʻi School is presented in Maly and Maly (2003); however Walter Keliʻiokekai Paulo, a master fisherman descended from a line of canoe makers mentions a teacher who taught at the school. "She has this *ʻupena* for *akule.* So we would use this *ʻupena*. The one that was in charge of this operation was the papa of Abby Paulo, her who was a school teacher I think, in Miloliʻi one time (2003:188).

FINDINGS

The archaeological inventory survey of the Miloliʻi Beach Park identified three historic single feature sites. These consist of an erosion control retaining wall (Site 31097), a discontinuous boundary wall (Site 31098), and an historic basketball court (Site 31099). The location of the three sites is presented in **Figure 25** and the sites are described below.

Site 31097 is a mortared stone retaining wall that extends along the north and west side of the Miloliʻi Beach Park. This retaining wall is depicted in an undated historic photograph of the park, obtained from the Paʻa Pono Miloliʻi website (http://paaponomilolii.org/the-village; **Figure 26**). The retaining wall extends along the north and western sides of the park property, and is constructed of stacked, faced and mortared boulders and cobbles. The surface of the wall is capped with cement mortar that is 0.85 to 0.9 meters wide. The wall originates outside the parcel to the northeast, extending along the western side of the Miloliʻi Road. It enters the project area at the northeastern corner of the park, and extends 65.0 meters to the west, where it angles to the south for an additional 7.0 meters. These portions of the site appear to represent the original retaining wall that bordered the park, based on their appearance. Overviews of the original retaining wall are presented on the cover of this report and in **Figure 27** and **Figure 28**.

There is a broken concrete pier block located seaward of the retaining wall on the coastal escarpment. The pier measures 0.5 meters square at the base, 0.42 meters square at the top and 0.3 meters in height. A broken section of the pier is located to the northeast (**Figure 29**).

There are additional portions of the retaining wall located along the western side of the park, 4.5 meters south of the original section. These portions extend an additional 26.0 meters to the southwest, following the edge of the coastal escarpment. The appearance and condition of these sections of the retaining wall suggest they are modern additions to the site.

Site 31097 is interpreted as an historic erosion control feature likely built to prevent coastal erosion of the park and the adjacent Miloliʻi Road. The site is altered and in fair condition. It is assessed as significant per HAR §13-284-6 under Criterion d (information content) and is recommended for no further work.

Site 31098 is a discontinuous stone wall that extends along portions of the southern boundary of the Miloliʻi Beach Park. There are three segments of intact wall (Segments 1-3) separated by gaps. **Segment 1** originates at the southeastern corner of the parcel and extends 29.3 meters to the northwest where it terminates. A perpendicular section of the wall extends to the south from the eastern end outside the project area. This portion is 0.9 meters in width and ranges in height from 0.25 to 0.9 meters. The eastern is in relatively good condition; however the western portion is collapsed. No cultural material is present in association with the wall.

Segment 2 is located 12.0 meters to the west of the seaward end of Segment 1. It is 7.8 meters long (north-south), 0.9 meters wide and 1.0 meters in height. **Segment 3** is located 2.9 meters north of Segment 2. This portion of the wall is 9.9 meters long, 0.75 to 0.8 meters wide and 0.6 to 0.9 meters in height. The Site 31098 wall is constructed of stacked and faced boulders and cobbles with no cultural material present. Overviews of the wall are presented in Figure 30 and **Figure 31**.

A modern wall is located 5.0 meters to the north of Segment 3. This wall is also located on the project boundary between the park and the adjacent house lot. This wall extends 3.2 meters to the north, then angles to the west and southwest for 38.0 meters. The appearance and condition of this wall indicates it is a modern addition to the park.

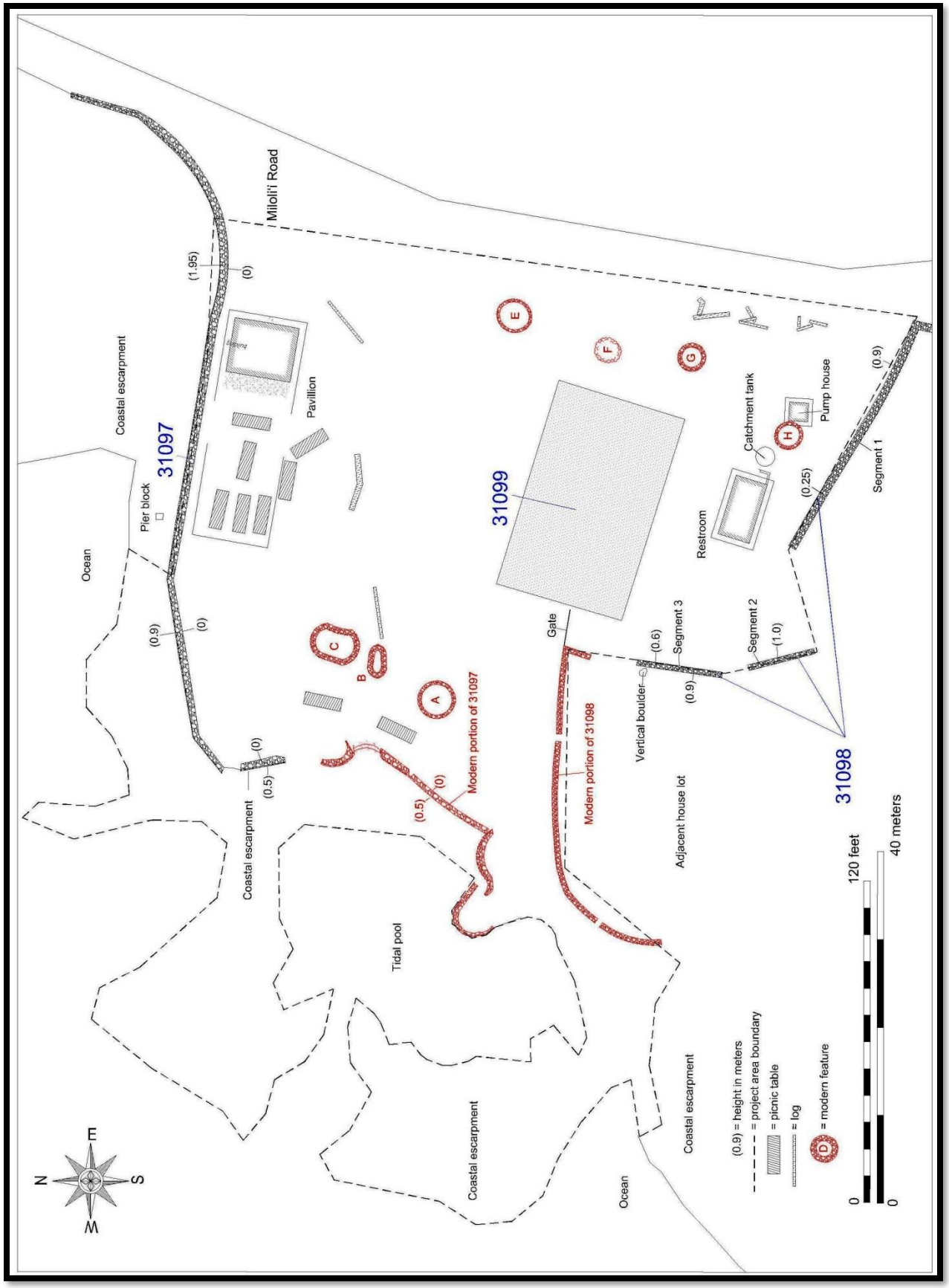

Figure 25. Site location map

Figure 26. Undated map of Miloliʻi Beach Park showing Site 31097 retaining wall (from Paʻa Pono Miloliʻi website)

Figure 27. Site 31097 retaining wall (view to east)

Figure 28. Site 31097 retaining wall (view to northeast)

Figure 29. Concrete pier block (view to west)

Figure 30. Site 31098, Segment 2 wall (view to southwest)

Figure 31. Site 31098, Segment 3 wall (view to south)

Site 31098 is interpreted as an historic boundary wall that separates the park from an adjacent house lot. This is based on its location on the project area boundary and its formal type and appearance. The wall is altered and in fair condition. It is assessed as significant per HAR §13-284-6 under Criterion d (information content) and is recommended for no further work.

Site 31099 is a basketball/volleyball court located in the southeastern portion of the project area. It is rectangular in shape and is 24.2 meters (79 feet) long (northwest by southeast) and 15.0 meters (49 feet) wide, surrounded by a 6 ft high chain-link fence. There are basketball hoops with backboards at each end and there are two posts for the volleyball in the middle of the court (**Figure 32**).

Figure 32. Site 31099 basketball/volleyball court (view to west)

According to Jeff Ochi of the County of Hawaiʻi, the court existed when the parcel was used as the former school grounds. The County of Hawaiʻi obtained the land in 1969, indicating that the court is at least 50 years old, making it an historic property. The basketball hoops, volleyball posts and chain-link fence are however modern additions to the site, and the surface of the court has likely been reconditioned. The site is altered and in good condition. It is assessed as significant per HAR §13-284-6 under Criterion d (information content) and is recommended for no further work.

CONCLUSION

Discussion

The survey documented remnants of the Miloli‘i School. These consist of an erosion control retaining wall (Site 31097), a discontinuous boundary wall (Site 31098), and a basketball court (Site 31099). The Site 31097 retaining wall functions to prevent coastal erosion, while the Site 31098 wall separates the project area from an adjacent house lot. The Site 31099 basketball court represents the only surviving remnant of the actual school facility.

No pre-contact archaeological sites or features are present in the parcel. This is likely due to the extensive historic and modern use of the project area, and potentially by the multiple tsunamis that have inundated the Milioli’i area.

Significance Assessments

The sites identified during the survey are assessed for significance based on Hawai‘i Administrative Rules (HAR) §13-284-6. According to (HAR) §13-284-6 (b), a site must possess integrity of location, design, setting, materials, workmanship, feeling, and/or association and shall meet one or more of the following criteria:

1. **Criterion "a"**: Be associated with events that have made an important contribution to the broad patterns of our history;
2. **Criterion "b"**: Be associated with the lives of persons important in our past;
3. **Criterion "c"**: Embody the distinctive characteristics of a type, period, or method of construction; represent the work of a master; or possess high artistic value;
4. **Criterion "d"**: Have yielded, or is likely to yield, information important for research on prehistory or history; and
5. **Criterion "e":** Have an important traditional cultural value to the native Hawaiian people or to another ethnic group of the state due to associations with traditional cultural practices once carried out, or still carried out, at the property or due to associations with traditional beliefs, events or oral accounts—these associations being important to the group’s history and cultural identity.

Sites 31097, 31098, and 31099 possess integrity of location and materials. The sites are assessed as significant under Criterion “d”. The sites have yielded information important for understanding the historic use of the project area.

Treatment Recommendations

The mapping, written description and photography of Sites 31097, 31098, and 31099 adequately document them and no further work or preservation is recommended. The current project was done in conjunction with the preparation of an Environment Assessment for improvements to the existing Miloli’i Beach Park (see **Figure 3**).

TRANSLATION OF HAWAIIAN WORDS[1]

ahupuaʻa – traditional Hawaiian land unit usually extending from the uplands to the sea

akule - Big-eyed or goggle-eyed scad fish (*Trachurops crumenophthalmus*)

heiau – pre-Christian place of worship, shrine

kapu – taboo, forbidden

koʻa - fishing grounds

konohiki – headman of an *ahupuaʻa* land division under the chief

kuleana – small piece of property, as within an *ahupuaʻa*

kuula - any stone god used to attract fish

Māhele – land division of 1848

makai - seaward

mauka – inland

mele - Song, anthem, or chant of any kind

ʻohana - family, relative, kin group

ʻōpelu - *Decapterus* spp

puoa - house for depositing a corpse

ʻupena – fishing net

[1] - from wehewehe.org

REFERENCES

Apple, R.

1987 "History of the Hawaiian Volcano Observatory", USGS Professional Paper 1350. U.S. Department of the Interior, U.S. Geological Survey, Menlo Park, CA.

Barrera, W.

1989 Archaeological Reconnaissance, TMK: 8-9-06:5, Kapua, South Kona, Hawaiʻi.

1995 Honomalino, South Kona, Hawaiʻi Island: Archaeological Inventory Survey of TMK: 8-9-05:4

Beamer, Kamanamaikalani

2014 *No Mākou Ka Mana Liberating a Nation.* Kamehameha Publishing 2014, Honolulu, HI.

Borthwick, D., R. Chiogioji, B. Colin, and H. Hammatt

1997 Archaeological Inventory Survey of a 7-acre Parcel at Pahoehoe, Hawaiʻi (TMK: 7-7-08:20, 31, and 100). Cultural Surveys Hawaiʻi report prepared for Mr. John Kingman.

Chinen, Jon J.

1958 *The Great Māhele: Hawaii's Land Division of 1848.* University of Hawaiʻi Press.

Clark, J.R.K

2001 *Hawaii Place Names: Shores, Beaches and Surf Sites.* University of Hawaiʻi Press, Honolulu.

DLNR (Department of Land and Natural Resources)

2003 Hawaiʻi Administrative Rules, Title 13, Department of Land and Natural Resources, State Historic Preservation Division.

FR

n.d. Foreign Register of Kuleana Claims Recorded by the Board of Commissioners to Quiet Land Titles in the Hawaiian Islands. Manuscript. Hawai'i State Archives.

FT

n.d. Foreign Testimony Recorded by the Board of Commissioners to Quiet Land Titles in the Hawaiian Islands. Manuscript. Hawai'i State Archives.

Farber & Associates

2011 Environmental Assessment, Miloliʻi Community Enrichment and Historical Center Miloli'i, Ho'ōpūloa, South Kona District, Island of Hawaiʻi, Hawaiʻi Section 106 Analysis and Cultural Impact Assessment prepared for Pa`a Pono Miloli`i

Fornander, A.

1885 An Account of the Polynesian Race, its Origins and Migrations, and the Ancient History of the Polynesian People to the Times of Kamehameha I. Vol. II. Trubner, London.

Giambelluca, T., Q. Chen, A. Frazier, J. Price, Y. Chen, P.S. Chu, J.K. Eischeid, and D.M. Delparte

2013 Online Rainfall Atlas of Hawaiʻi. *Bull. Amer. Meteor. Soc.* 94, 313-316, doi: 10.1175/BAMS-D-11-00228.1.

Groza, R., D. Shideler and H. Hammatt

2010 Archaeological Inventory Survey Report for the Proposed South Kona Irrigation Project, Pāpā 1 and 2, Anapuka, Hoʻōpūloa, Miloliʻi, Omokaʻa, Kalihi, Honomalino and Kapuʻa Ahupuaʻa, South Kona District, HawaiʻI Island, TMK: (3) 8-8-16:23; 8-9-01:2, 19 & 20; 8-9-02:12 & 14, and 8-9-13:27. Cultural Surveys Hawaii Report prepared for Belt Collins Hawaiʻi, Ltd.

Hammatt, H.H

1980 Letter Report: Archaeological Reconnaissance of a House Lot, Kapua Bay, Hawaiʻi, TMK: 8-9-06:5, ARCH, Lawai, Kauai.

Handy, E.S.C. and E.G. Handy

1972 Native Planters in Old Hawaii. *B.P. Bishop Museum Bulletin* 233. Bishop Museum Press, Honolulu (with M.K. Pukui).

Haun, A. and A. Walker

1988 Archaeological Reconnaissance Survey, Farms of Kapua, Mauka Lands Project Area, land of Kapua, South Kona District, Island of Hawaiʻi (TMK: 3-8-9-06: Por. 3, 19), PHRI. Hilo, HI.

Haun, A. and D. Henry

2013 Archaeological Inventory Survey, TMK: (3) 8-8-016: 012, 013, 035, 036 AND 037, Land of Papa 2, South Kona District, Island of Hawaiʻi. Haun & Associates report 869-042413 prepared for TGUHI1, LLC, Kailua-Kona, HI.

2015 Archaeological Inventory Survey, TMK: (3) 8-8-009:141, Pāpā 2 Ahupuaʻa, South Kona District, Island of Hawaiʻi. Haun & Associates report 960 prepared for Miloliʻi Beach Club Association II.

2018 Archaeological Site Preservation Plan, Sites 50-10-65-4845, 28991, 30104, and 30105, Pāpā 2 Ahupuaʻa, South Kona District, Island of Hawaiʻi. TMK: (3) 8-8-009:141. Haun & Associates report 960 prepared for Miloliʻi Beach Club Association II.

Hibbard, D.

1993 Historic Preservation Field Inspection of Historic Sites Complex at Papa Bay and Recommendations for Restoration of Damaged Sites at the Complex Papa 2, South Kona, Hawaiʻi Island TMK: 8-8-09: 141, Lot 162. Log No. 9179, Doc. No. 9307hm01 prepared for Virginia Goldstein, Planning Department, County of Hawaiʻi.

Iʻī, J.P.

1959 Fragment of Hawaiian History. *Bishop Museum Special Publication* 70. Bishop Museum Press, Honolulu.

Indices

1929 *Indices of Awards Made by the Board of Land Commissioners to Quiet Land Titles in the Hawaiian Islands.* Territory of Hawaiʻi, Honolulu.

Kamakau, S.M.

1961 *Ruling Chiefs of Hawaii.* Honolulu: The Kamehameha Schools Press.

Kinney, H. W.

1913 *The Island of Hawaii*. Hicks-Judd Company, San Francisco

Loomis, H.

1976 Tsunami Wave Runups Heights in Hawaiʻi. Hawaiʻi Institute of Geophysics, University of Hawaiʻi, Honolulu, and Pacific Marine Environmental Research Laboratories, NOAA.

Maly, K. and O. Maly

2002 *Kipahoehoe ma Kapalilua, Kona Hema: A Cultural Study of Kipahoehoe and Neighboring Lands in Kapalilua, South Kona*. Kumu Pono Associates, Hilo, HI.

2003 *He Wahi Moʻolelo No Na Lawaiʻa Ma Kapalilua, Kona Hema, Hawaiʻi: A Collection of Historical Accounts and Oral History Interviews with Elder Kamaʻaina Fisher-people from the Kapalilua Region of South Kona, Island of Hawaiʻi.* Kumu Pono Associates, Hilo, HI.

2004 *He Moʻolelo Aina: A Cultural Study of the Manuka Natural Area Reserve Lands of Manuka, District of Kaʻu and Kaulanamauna, District of Kona, Island of Hawaiʻi.* Kumu Pono Associates, Hilo, HI.

Moffat, R. M. and G.L. Kirkpatrick

1995 *Surveying the Māhele: Mapping the Hawaiian Land Revolution. Palapala`äina.* Editions Limited, Honolulu.

NR

n.d. Native Register of Kuleana Claims Recorded by the Board of Commissioners to Quiet Land Titles in the Hawaiian Islands. Manuscript. Hawai'i State Archives.

NT

n.d. Native Testimony Recorded by the Board of Commissioners to Quiet Land Titles in the Hawaiian Islands. Manuscript. Hawai'i State Archives.

Paʻa Pono Miloli'i

1984 Preliminary Project Assessment for the Development of the Miloliʻi Community, State Parks Division.

Paʻa Pono Miloli'i website

2019 http://paaponomilolii.org

Pukui, Mary Kawena, Samuel H. Elbert and Esther T. Mo`okini

1974 *Place Names of Hawai`i*. University of Hawai`i Press, Honolulu.

Rechtman, R.

2000 An Archaeological Survey of a Roughly 40 X 40 foot area in an Orchard on Mac Farms of Hawaii, Inc property in Kapua Ahupuaʻa, South Kona District, Island of Hawaiʻi. Rechtman Consulting, Keaʻau, HI.

Reinecke, J.

1930 *Archaeology of Kona*. Ms on file Dept. of Anthropology, Bishop Museum, Honolulu.

Robins, J., J. Collins, H. Hammatt, T. Barr, H. Ballard and M. Heidel

1994 An Archaeological Inventory Survey of an approximately 1260-acre subject parcel in the ahupuaʻa of Kapuʻa, South Kona District, island of Hawaiʻi (TMK: 8-9-06:por. 3). Cultural Surveys Hawaiʻi, Kailua, HI.

Rosendahl, P.

1983 Archaeological Reconnaissance Survey, Farms of Kapua Project Area, Land of Kapua, South Kona, island of Hawaiʻi, Ms. 73-120782, PHRI, Hilo, HI.

1984 Addendum Report: Additional Archaeological Input, Environmental Impact Statement Preparation, with M. Kaschko and M. Allen, Ms. 73-120782, PHRI, Hilo, HI.

2006 Archaeological Assessment Survey and Cultural Assessment Study, South Kona Watershed Irrigation System Project, lands of Pāpā to Kaulanamauna, South Kona District, island of Hawaii. PHRI, Hilo, HI.

Sato, H.H., E.W. Ikeda, R. Paeth, R. Smythe and M. Takehiro Jr.

1973 *Soil Survey of the Island of Hawaii.* U.S. Dept. of Agriculture, Soil Conservation Service and University of Hawaiʻi Agricultural Experiment Station. Washington D.C. Government Printing Office.

Scheffler T.

2012 Draft Historic Preservation Plan for Rock Wall (SIHP # 50-10-66-28991) located on TMK (3) 8-8-01:020, Papa 1st and 2nd Ahupuaʻa, South Kona, Hawaiʻi island. Geohazards Consultants International, Inc. report prepared for Barbara Polumbo.

Scheffler T., J. Lockwood and L. Sumner

2012 Archaeological Inventory Survey of TMK: (3) 8-8-01:310, Papa 1st and 2nd Ahupuaʻa, South Kona, Hawaii island. Geohazards Consultants International, Inc. report prepared for Barbara Polumbo.

Speakman, C.E., Jr.

1978 *An Informal History of the Hawaiian Island.* San Rafael: Pueo Press.

Soehren, L.J.

1988 Letter Report: Archaeological Reconnaissance, TMK: 8-9-06:5, Kapua, South Kona, Hawaiʻi.

Stokes J.F.G and T. Dye

1991 *Heiau of the Island of Hawaiʻi: A Historic Survey of Native Temple Sites*. Edited by Tom Dye, Bishop Museum Press, Honolulu

Thrum, T.G.

1908 *Heiaus and Heiau Sites Throughout the Hawaiian Islands*, island of Hawaiʻi. *The Recognized Book of Authentic Information on Hawaii, Combined with Thrum's Hawaiian Annual and Standard Guide 38-47,* Honolulu Star-Bulletin, Honolulu.

The Hawaiian University of Hawaiʻi at Manoa online library

2019 www.magis.manoa.hawaii.edu

U.S. Climate Data website

2019 www.usclimatedata.com

Waihona ’Aina Corporation

2000 The Mahele Database, waihona.com.

Watson, T., and J. Farber

2012 Miloliʻi Community Enrichment and Historical Center Miloli’i, Ho’ōpūloa, South Kona District, Island of Hawaiʻi, Hawaiʻi Section 106 Analysis and Cultural Impact Assessment prepared for Pa`a Pono Miloli`i

Wehewehe.org

2019 Hawaiʻi Electronic Library - *Nā Puke Wehewehe ʻŌlelo Hawaiʻi*

Wolfe, E. and J. Morris

2001 Geological Map of the Island of Hawaiʻi. U.S. Department of the Interior. U.S Geological Survey.

APPENDIX C

SHORELINE CERTIFICATION MAP

DAVID Y. IGE
GOVERNOR OF HAWAII

SUZANNE D. CASE
CHAIRPERSON
BOARD OF LAND AND NATURAL RESOURCES
COMMISSION ON WATER RESOURCE MANAGEMENT

STATE OF HAWAII
DEPARTMENT OF LAND AND NATURAL RESOURCES

POST OFFICE BOX 621
HONOLULU, HAWAII 96809

RECEIVED
NOV 04 2019
AUSTIN, TSUTSUMI & ASSOCIATES, INC.
Honolulu, Hawaii 96817-5031

October 31, 2019

File No.: HA-578

Austin, Tsutsumi & Associates, Inc.
501 Sumner Street, Suite 521
Honolulu, Hawaii 96817

Dear Applicant:

Subject: Transmittal of Signed Shoreline Certification Maps
Owner(s): State of Hawaii
Tax Map Key: (3) 8-9-004:001

Enclosed please find two (2) copies of the certified shoreline survey map for the subject property.

If you have any questions, please feel free to call us at (808) 587-0424. Thank you.

Sincerely,

Cal Miyahara
Shoreline Disposition Specialist

Enclosures

cc: DAGS
HDLO

The shoreline as delineated in red is hereby certified as the shoreline as of

OCT 3 1 2019

Chairperson, Board of Land and Natural Resources

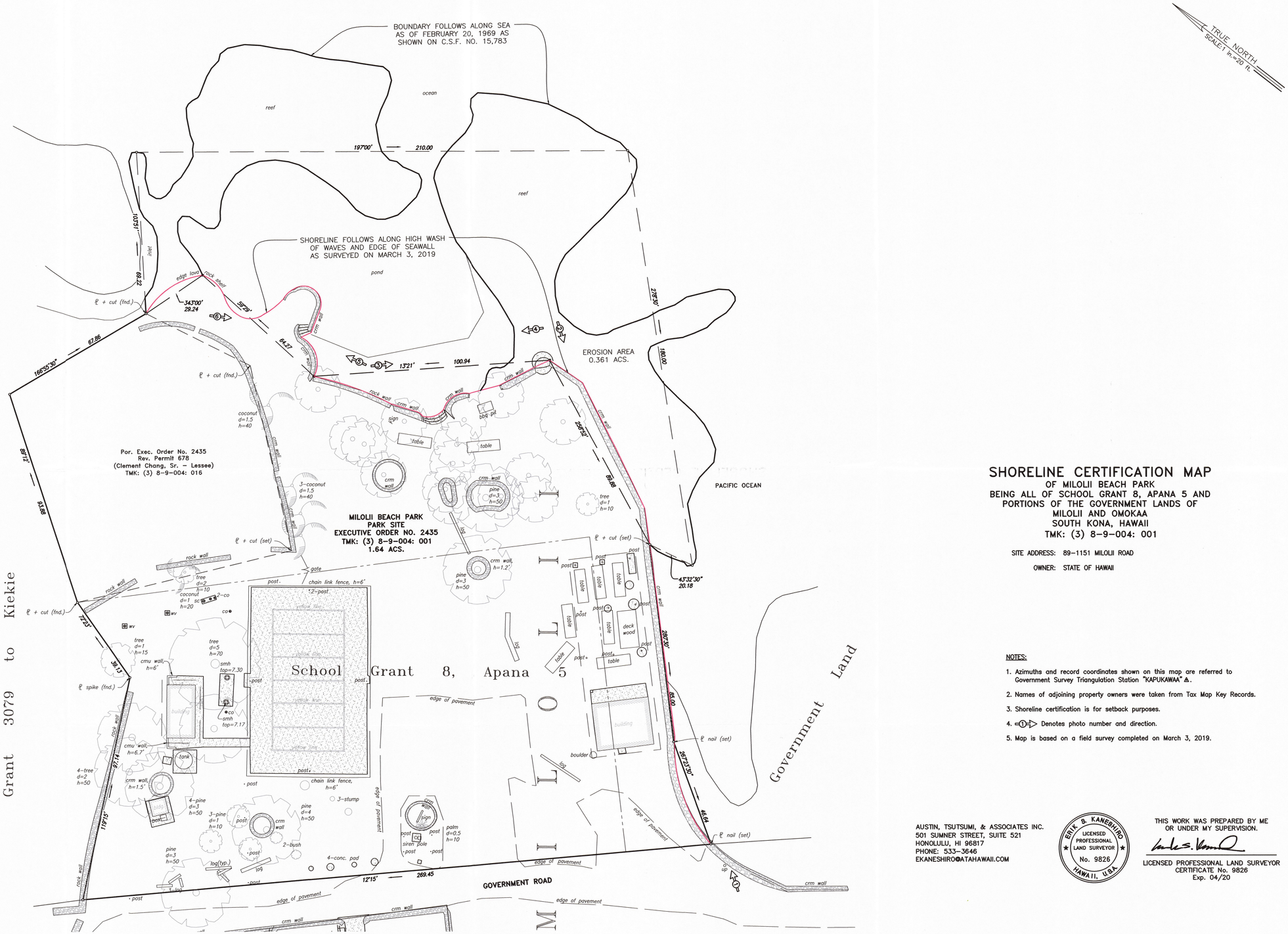

SHORELINE CERTIFICATION MAP

OF MILOLII BEACH PARK
BEING ALL OF SCHOOL GRANT 8, APANA 5 AND PORTIONS OF THE GOVERNMENT LANDS OF MILOLII AND OMOKAA
SOUTH KONA, HAWAII
TMK: (3) 8-9-004: 001

SITE ADDRESS: 89-1151 MILOLII ROAD

OWNER: STATE OF HAWAII

NOTES:

1. Azimuths and record coordinates shown on this map are referred to Government Survey Triangulation Station "KAPUKAWAA" △.
2. Names of adjoining property owners were taken from Tax Map Key Records.
3. Shoreline certification is for setback purposes.
4. =①=▷ Denotes photo number and direction.
5. Map is based on a field survey completed on March 3, 2019.

Abbreviations:

bldg	building
bw	bottom wall
cmu	concrete masonry unit
co	clean out
conc.	concrete
crm	concrete rock masonry
d	diameter
fnd.	found
h	height
pbx	panel box
sc	sewer chimney
tw	top wall
up	utility pole
wv	water valve

AUSTIN, TSUTSUMI, & ASSOCIATES INC.
501 SUMNER STREET, SUITE 521
HONOLULU, HI 96817
PHONE: 533-3646
EKANESHIRO@ATAHAWAII.COM

ERIK S. KANESHIRO
LICENSED PROFESSIONAL LAND SURVEYOR
No. 9826
HAWAII, U.S.A.

THIS WORK WAS PREPARED BY ME OR UNDER MY SUPERVISION.

LICENSED PROFESSIONAL LAND SURVEYOR
CERTIFICATE No. 9826
Exp. 04/20

Y:\2019\19-308 BOW Engineering Hilo Parks Project\DWG\MILOLII BEACH PARK SHORELINE.dwg
19-308

IWS ASSESSMENT AND FEASIBILITY STUDY FOR

MILOLI‘I BEACH PARK

Kahuku, Ka‘u, Hawai‘i
TMK: (3) 8-9-04:001

August 2020

Prepared For:

Department of Parks & Recreation
County of Hawai‘i
101 Pauahi Street, Suite 6
Hilo, Hawaii 96720

Prepared By:

Bow Engineering & Development, Inc.

Civil Engineering *Planning*

1953 South Beretania Street, PH-A
Honolulu, Hawai‘i 96826
Telephone: (808) 941-8853
Fax: (808) 945-9299
www.bowengineering.com

TABLE OF CONTENTS

EXECUTIVE SUMMARY **3**
PROJECT LOCATION & DESCRIPTION **4**
EXISTING WASTEWATER SYSTEM **5**
WATER QUALITY INVESTIGATION **7**
MARINE ASSESSMENT 7
MARINE WATER QUALITY AND SITE OBSERVATIONS 8
GROUND WATER LOCATIONS (SALINITY AND PH INVESTIGATION) 8
WATER QUALITY MONITORING (ENTEROCOCCUS SAMPLING) 10
ENTEROCOCCUS RESULTS AND DISCUSSION 21
ASSESSMENT OF EXISTING WASTEWATER SYSTEM **24**
IWS CONDITION ASSESSMENT 24
Photo 1 - Septic Inflow 24
Photo 2 - Septic Outflow 24
DYE TEST OBSERVATION 25
DISCUSSION OF WATER QUALITY INVESTIGATION & IWS ASSESSMENT **27**
WASTEWATER SYSTEM OPTIONS **28**
OPTION 1 – HOLDING SYSTEM 28
Option 1A: Holding Tank 29
Option 1B: Evaporative Toilet System 32
Option 1C: Prefabricated Waterless Restroom 35
OPTION 2 – IWS TREATED COLLECTION SYSTEM 37
Option 2A: Anua BioCoir Coconut Fiber Biofilter 38
Option 2B: BioBarrier High Strength Membrane BioReactor (HSMBR 1.5) 41
Option 2C: Nayadic Wastewater Treatment System (M1200) 44
DISCUSSION OF WASTEWATER SYSTEM OPTIONS 47
TREATED EFFLUENT DISPOSAL 49
CONCLUSION & RECOMMENDATIONS **50**
REFERENCES **51**
ATTACHMENTS **51**

EXECUTIVE SUMMARY

Bow Engineering & Development, Inc. has been contracted by the County of Hawai‘i Department of Parks and Recreation to analyze the beachfront water, assess the existing individual wastewater system (IWS), and provide recommendations for wastewater treatment options to reduce the bacteria output to beach park waters from the existing restroom facilities located at Miloli‘i Beach Park in Kahuku, Ka‘u on Hawai‘i Island.

Water Quality Investigation:

Marine water samples were collected at five different locations at Miloli'i Beach Park between March 9, 2020 and March 11, 2020 at both high and low tides and tested for enterococcus levels. Samples from Location B (near the entrance to the beach park and pavilion) were found to have the highest enterococcus levels which exceeded the limit for recreation waters. Location D (shallow marine cove fronting the beach park) was predicted to have the highest bacteria levels due to its proximity to the existing leach field. However, samples from Location D were found to have the lowest enterococcus levels, well below the limits allowed for recreational waters. A dye test originating at the comfort station's septic tank was performed to trace effluent through the system. If the effluent and dye reached the ground water table, it was expected that the dye would be present in marine waters surrounding the beach park. No dye was observed in the adjacent marine waters through the investigation period and beach park users did not report observing any dye in the days following the investigation period.

IWS Condition Assessment:

The site investigation and assessment done on March 10, 2020 found that the inflow side of the septic tank was full of solids filled to the invert of the inlet pipe. The outflow side of the septic tank was also full, with a liquid level at the outlet pipe invert. Effluent levels were observed to be normal, however the walls of the septic tank risers showed indication of overloading where effluent levels approached the bottom of the tank lid.

Recommendations:

Based on the findings from the water quality investigation and existing IWS condition assessment, three (3) options were considered. However, at this time, Option 1 is recommended based on the results of the Water Quality Investigation, dye test and the IWS capacity for normal day-to-day flows. Option 1 is to keep the existing IWS. Based on the Water Quality Investigation findings, it appears that the existing IWS is sufficient for handling normal day-to-day flows. It is recommended that further investigation (e.g. during high usage periods) and increasing the frequency of pumping (e.g. from once every three months to once a month) be considered. This will help determine if the existing IWS is functioning properly during high usage periods and determine an approximate high usage population.

PROJECT LOCATION & DESCRIPTION

The project site is located in Kahuku, Ka‘u in the Miloli’i Beach Park on Hawai‘i Island. The project site is adjacent to a residential property to the west and a church to the east. The project site consists of camping sites (capacity of 22 people), basketball/volleyball court, pavilion, picnic areas with seating, parking area and a comfort station. The beach park is used by the nearby Miloli’i community residents, a charter school, campers, and visitors. The beach park comfort station includes a total of four toilets and two sinks. The existing facilities are treated by a 1,250-gallon septic tank and is then discharged into an absorption bed. A high-water table is a concern due to the proximity of the site to the ocean during high tides and the occurrence of rainfall events.

Figure 1. Miloli’i Beach Park Location

EXISTING WASTEWATER SYSTEM

The existing comfort station currently has two bathrooms, each with two toilets and one sink for a total of four toilets and two sinks. According to as-built plans provided by the Department of Health, the existing IWS system consists of a 1,250-gallon traffic rated septic tank that discharges to an absorption field. The absorption field is approximately 45-feet long by 12-feet wide. The existing IWS system was completed and approved by DOH in December 2006. The completion of the IWS replaced an abandoned cesspool located between the comfort station and the absorption bed. See Attachment 1 for the as-built plans.

Per DOH guidelines, an estimated flow of 25 gallons/capita for "Camps with flush toilets, no showers" was used to back calculate the approximate usage the existing system was sized for. Based on the existing septic tank size of 1,200 gallons, it can be assumed that the existing system was size for a population of approximately 50 people per day. Based on the calculations, the existing system is sized to handle the estimated weekday use. However, there is potential that the system is undersized for the estimated increased weekend use.

The comfort station usage fluctuates throughout the week. An estimated usage during the weekdays range from 10-30 people per day and estimated usage during the weekends range from 50-100 people per day. Residents indicated the septic tank is full and needs to be pumped after large weekend gatherings. The septic tank is pumped every three months and it is noted that the septic tank is always full prior to pumping. Concerns have been raised by neighboring residences that treated effluent being discharged into the ocean due to the proximity of the site may not be treated well enough. The existing system may potentially be undersized to handle the higher usage during the weekends causing the system to push out effluent faster than required to properly treat it. It should be noted Hawaii County Department of Parks and Recreation has no records of wastewater spills.

To address the concern, Bow Engineering was contracted by Hawaii County Department of Parks and Recreation to assess the water quality of the nearby beach area and the findings were documented in the Water Quality sections of this report. If the existing system is found to be inadequate and an upgraded system needs to be installed to properly treat effluent, this feasibility study will explore alternative options. Physical limitations of the site which provide design challenges include shallow depth to groundwater and limited space available. The current septic tank is situated between the comfort station, basketball court and two cypress pine trees.

It should be noted that DOH has no records of any IWS records for the neighboring church located across of Miloli'i Road or for any of the nearby residences. These unknown existing systems may also impact the ground water system and contribute to the concerns raised as the level of treatment for these systems is unclear.

Figure 2. Existing Septic Tank Site

Figure 3. Existing Absorption Field Site

WATER QUALITY INVESTIGATION

MARINE ASSESSMENT

The marine assessment around Miloli'i Beach Park (MBP) involved a two-part study:

1. Visual site inspection and water quality monitoring (salinity and pH) around near shore waters.
2. Water sample collection at sites affected by ground water (fresh or brackish) as determined by salinity/pH. These water samples were to be collected at high and low tides over a three-day period and analyzed for enterococcus, a human-specific waste bacterium.

Based on previous studies and interviews with local residents, MBP is highly influenced by groundwater sources. Residents who use the beach park for recreational beach activities have expressed concerns over water quality, particularly high bacteria levels due to illness and infection experienced periodically by beach-users. The monitoring protocol for this assessment were designed by Dr. Paul Bienfang (Marine Biologist, Analytical Services, LLC) and Bow Engineering & Development, Inc. Bacteria and pathogen contaminations in the ocean are hypothesized to be entering the marine environment through groundwater inputs, due to the volcanic geology in the area.

Identifying the possible sources of ground water contaminants would be the most likely locations of elevated pathogen levels in the marine environment. The surrounding community has varying levels of wastewater treatment ranging from cesspools (no treatment) to individual wastewater systems (IWS) with leach field disposal (treated with septic tanks). Each IWS may have varying levels of treatment which are determined through permitting with the Department of Health – Waste Water Branch. At MBP, a septic tank treats effluent from a comfort stations (4 toilets and 2 sinks) prior to disposal to the adjacent leach field. The leach field is approximately 50 yards from the shore and is likely influenced by groundwater (brackish and marine) depending on tides. There are two structures near MBP: a community church and a private resident (see Table 2 for relative locations). The level of wastewater treatment is unknown at these facilities. Although no one observed to be occupying the residence or using the church, any water usage at these facilities could possibly contribute to groundwater contamination at various locations around the beach park.

The highest probability of detecting ground water in the near shore waters would be at the interface of groundwater-marine locations. To detect these locations, salinity and pH were monitored along the coast using a continuous monitoring probe with GPS capability. Decreases in salinity and pH would identify ground water sources (fresh/brackish water). These locations would be mapped and used for water sampling for enterococcus. Marine water with ground water influence would be sampled for enterococcus which may be contaminating the ground water (through cesspools and leach fields) prior to entering the ocean. Due to the negligible beach use at the time of this study, direct contamination by humans using the nearshore waters could be excluded as a potential source of bacterial coliforms.

MARINE WATER QUALITY AND SITE OBSERVATIONS

At the site visit on March 9, 2020, Kua o ka Lā New Century Public Charter School described some research that is ongoing around MBP. Students at the school routinely perform visual and analytical marine studies of the near shore marine waters, particularly for environmental DNA studies. The students and teachers were able to describe some general locations of where brackish water were found in the area, including some freshwater ponds located in properties mauka of the beach park. The areas described by the school matched the areas where our investigation detected groundwater. They described two locations that they monitor that have ground water influence. We were able to find two additional locations that was also worth including as a sampling area. More will be discussed in the subsequent section of the investigation and results.

The waters surrounding MBP were very clear with an abundance of fish and coral. The small coves and tide pools were teeming with fish, crabs, hermit crabs, and sea cucumbers. Visually, there were no indications of external contamination caused by pollution or other sources. Several groups were observed to visit the beach park, only a few people entered the water and only waded in the sandy areas and did not get in deeper than knee-depth. The comfort station did experience a fair amount of activity, although specific observations were not recorded to determine the actual water usage (sink versus toilet use).

It was difficult to visually see any fresh/brackish water entering the coastal waters. Zones of mixing were not apparent and there were no signs of algae or floral growth that support freshwater mixing. After using the probe to measure salinity and pH throughout the site, small "springs" were observed flowing into the ocean. These were only observed at low tide; at mid to high tides, the "springs" were concealed by the wash of the waves or incoming tide levels.

GROUND WATER LOCATIONS (SALINITY AND PH INVESTIGATION)

To detect ground water in the coastal waters, water quality monitoring personnel calibrated salinity and pH probes prior to entering the water (see Table 1 for equipment specifications). The probes were then towed through the near shore waters (within six feet from shore) to measure for decreases in salinity and pH. Salinity was used as the primary detection for groundwater with pH used as a secondary detection method. In general, the water being monitored was less than two feet deep.

Parameter	Equipment*	Unit	Approx. Error	Method	Min. Detectable/ range	Min. Sensitivity/ Resolution
Temperature	YSI ProDSS-1 Temperature Sensor Probe	°C	±0.2 °C	SM 2550B	-5 to 50 °C	0.1 °C or 0.1 °F
Salinity	YSI ProDSS-1 Salinity Probe Sensor	PPT	±1.0% of reading or ±0.1 ppt	SM 2520 Salinity	0 to 70 ppt	0.01 ppt
pH	YSI ProDSS-1 pH Sensor Probe	standard units	±0.2 pH units	SM 4500-H+	0 to 14 pH units	0.01 pH units
*All sensor probes will be housed in a YSI ProDSS-4 port cable assembly which will be connected to a YSI ProDSS-1 meter						

• ppt: parts per thousand

Table 1. Monitoring Parameters and Equipment

The salinity of deeper water around MBP were found to be typical of ocean water (34 – 36 ppt). The salinity dropped to around 30 – 32 ppt along the near shore waters and show the influence of groundwater. As the source of groundwater was approached the salinity was observed to drop quickly to 20 – 25 ppt before the source was identified at the lowest measured salinity 13 – 15 ppt. The areas identified at low tide on March 9, 2020 are shown in the map below.

SALINITY/pH WATER QUALITY INVESTIGATION				
MAP LABEL	LATITUDE (°N)	LONGITUDE (°W)	SALINITY (PPT)	pH
A	19.18315	155.90700	15.2	7.29
B	19.18254	155.90714	13.6	7.14
C	19.18243	155.90736	16.7	7.79
D	19.18219	155.90793	14.6	8.22

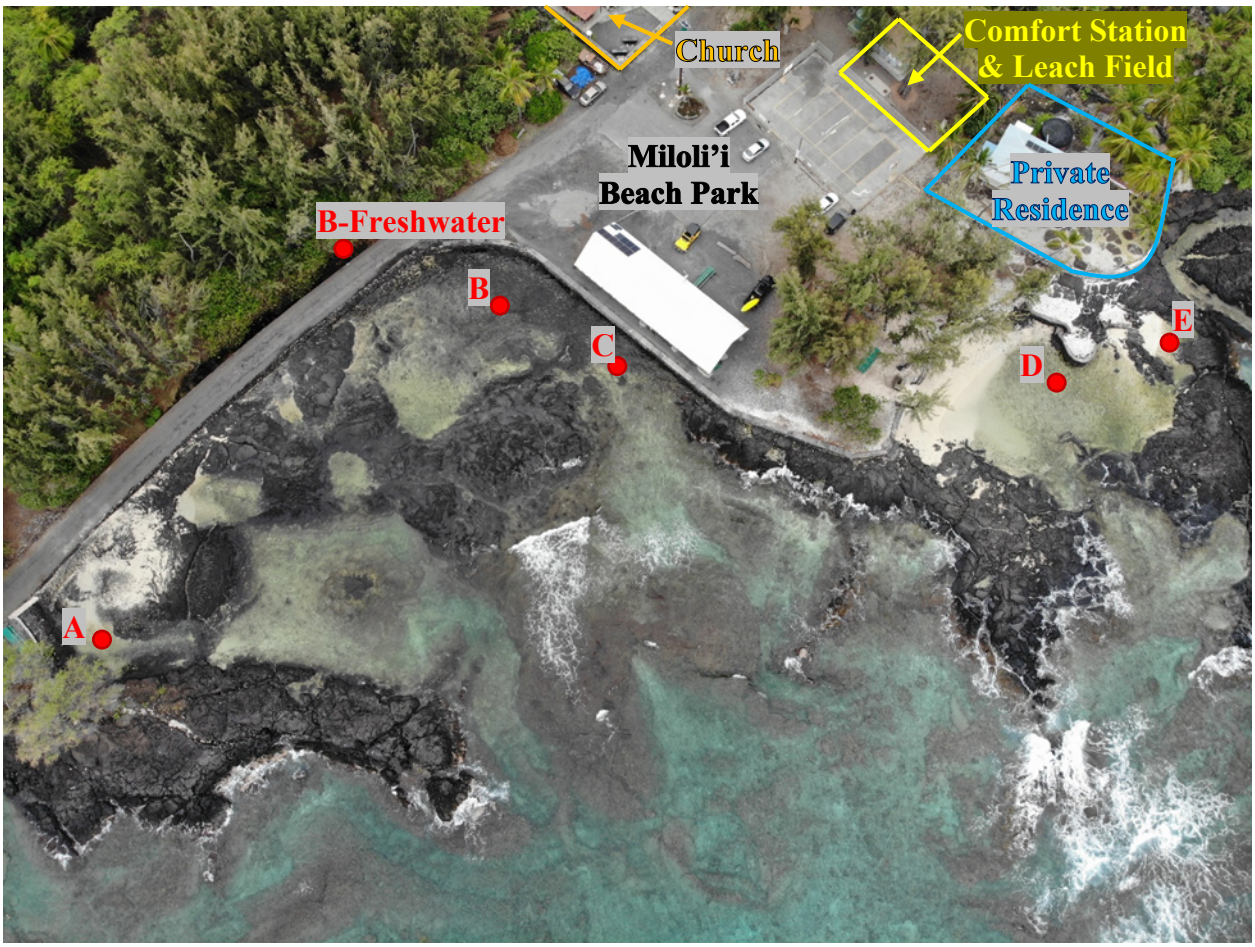

Table 2. Salinity investigation and results

Four distinct areas were identified (A, B, C, D) with a fifth (B-Freshwater) and sixth (E) area added during enterococcus sampling. The additional area, B-Freshwater, was found to be brackish water (15-20 ppt) adjacent to, and mauka of the road from sample area "B". During enterococcus sampling, the salinity probe was used to locate any variation in groundwater outlets detected previously determined; this is how area E was identified. The GPS location of the monitoring

location was pinned using the probe meter. All GPS locations described in this report are pinned to the instrument meter and not the actual location of the monitoring probes.

WATER QUALITY MONITORING (ENTEROCOCCUS SAMPLING)

On March 9, 2020, water samples were collected for laboratory analysis for enterococcus. Samples from A, C, and D were collected in areas near the low salinity locations detected during the preliminary site investigation. The tide was high at the time of sample collection, differing from the salinity investigation, which took place at low tide. The tidal change also redirected ground water flow to slightly different output locations. At the afternoon high tide (1.6 ft), the samples were taken between 3:50 – 4:20 PM. The salinity probe was used to identify the closest point of groundwater mixing with the marine environment for optimum groundwater and enterococcus detection.

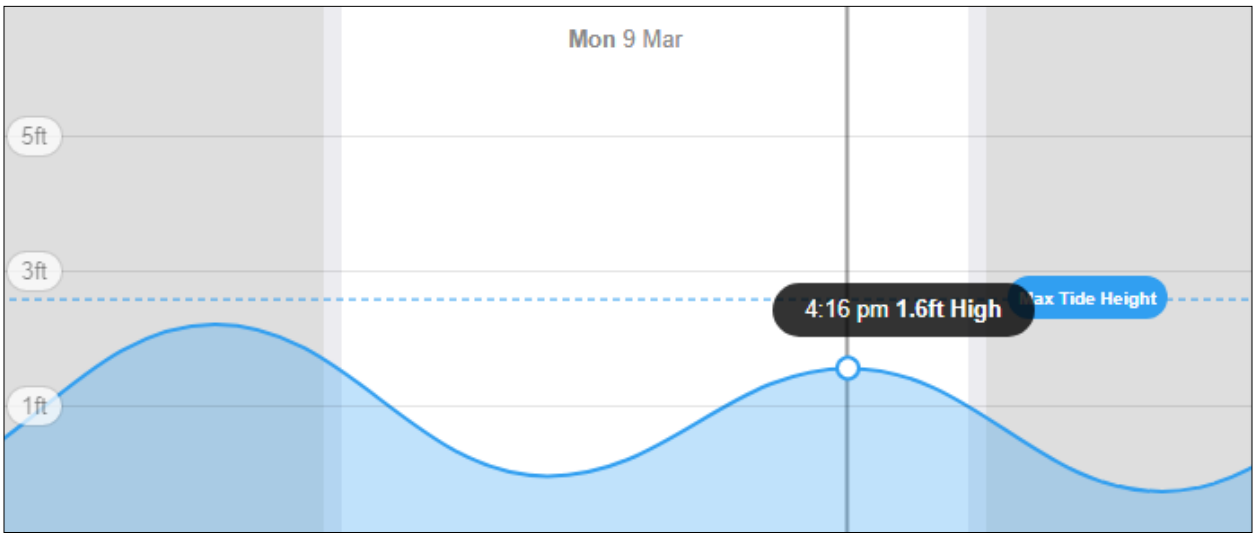

Figure 3. Tide chart for March 9, 2020 sampling at high tide.

Location B's groundwater source was imperceptible at high tide; however, it was observed that brackish water was present on the mauka side of the road to the beach park in the general vicinity of B. This water was originally thought to be tidally influenced, marine in origin, and therefore have a high salinity (34 – 36 ppt). However, the salinity was brackish and between 16 – 17 ppt. The elevated tide seems to be pushing the brackish ground water up to the surface. This location was sampled as "Location B – Fresh Water".

Near location D, a second location was sampled as "Location E". This sample was taken in a small tidal pool near D, which had a slight drop in salinity. The exact location of this sample location is shown in the tables below.

MARCH 9, 2020 – HIGH TIDE		
LOCATION A		
LATITUDE (°N)	19.18307	
LONGITUDE (°W)	155.90698	
SALINITY (PPT)	15.4	
pH	7.9	
LOCATION B		Not available due to undetectable groundwater source during high tide sampling event.
LATITUDE (°N)	N/A	
LONGITUDE (°W)	N/A	
SALINITY (PPT)	N/A	
pH	N/A	
LOCATION C		
LATITUDE (°N)	19.18244	
LONGITUDE (°W)	155.90741	
SALINITY (PPT)	32.3	
pH	8.11	
LOCATION D		
LATITUDE (°N)	19.18212	
LONGITUDE (°W)	155.90807	
SALINITY (PPT)	33.7	
pH	8.13	

Table 4. March 9, 2020 Enterococcus Sampling.

MARCH 9, 2020 – HIGH TIDE		
LOCATION B – FRESH WATER		
LATITUDE (°N)	19.18259	
LONGITUDE (°W)	155.90704	
SALINITY (PPT)	16.5	
pH	7.56	

Table 4. March 9, 2020 Enterococcus Sampling at Fresh Water Location.

MARCH 9, 2020 – HIGH TIDE		
LOCATION E		
LATITUDE (°N)	19.18212	
LONGITUDE (°W)	155.90807	
SALINITY (PPT)	33.7	
pH	8.13	

Table 5. March 9, 2020 Enterococcus Sampling at Fresh Water Location.

The enterococcus analytical results are presented in the table below and will be discussed further in later sections of this report. These results are presented in *Most Probable Number* or *MPN*, and for the purpose of this report will be abbreviated as # and will be filled in by the numerical value, when available, as a unit of concentration (per 100 mL).

Miloli'i Water Quality Investigation		
Analysis method: IDEXX (E.Cocci)		
March 9, 2020		
Day 1	Location	# / 100 mL
High Tide	A	173
	B-Freshwater	368
	C	51
	D	10
	E	0

Table 6. March 9, 2020 Enterococcus laboratory analysis results.

On March 10, 2020, water samples were collected for laboratory analysis of enterococcus at two tidal events during the day. At the morning high tide, samples from A, B, B-Freshwater, C, and D were taken between 6:45 – 7:15 AM. The tide was at 1.5 ft during this monitoring event. The highest morning tide was at 4:45 AM and measured at 2.2 ft, however it was not practical to collect water samples at this time. The samples were collected in areas near the low salinity locations detected during the preliminary site investigation. The salinity probe was used to identify the closest point of groundwater mixing with the marine environment for optimum groundwater and enterococcus detection. The exact sample locations are shown in the tables below.

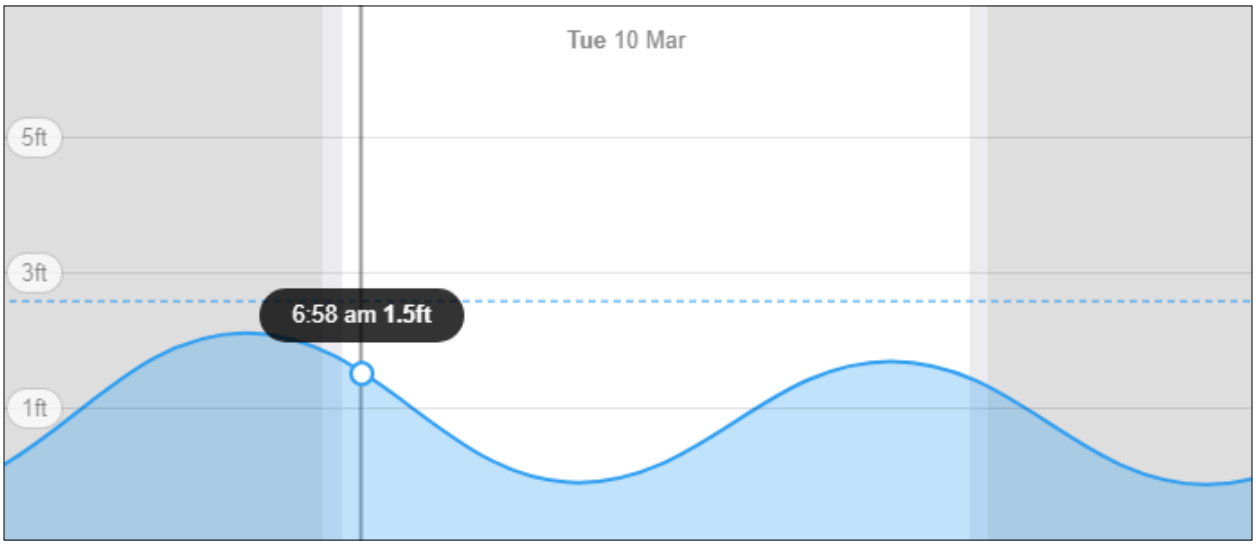

Figure 5. Tide chart for March 10, 2020 sampling at high tide.

MARCH 10, 2020 – HIGH TIDE		
LOCATION B – FRESH WATER		
LATITUDE (°N)	19.18245	
LONGITUDE (°W)	155.90715	
SALINITY (PPT)	16.6	
pH	7.16	

Table 7. March 10, 2020 Enterococcus Sampling at Fresh Water Location.

MARCH 10, 2020 – HIGH TIDE		
LOCATION A		
LATITUDE (°N)	19.18299	
LONGITUDE (°W)	155.90704	
SALINITY (PPT)	16.7	
pH	7.41	
LOCATION B		
LATITUDE (°N)	19.18254	
LONGITUDE (°W)	155.90707	
SALINITY (PPT)	18.1	
pH	7.15	
LOCATION C		
LATITUDE (°N)	19.18245	
LONGITUDE (°W)	155.90746	
SALINITY (PPT)	25.9	
pH	7.71	
LOCATION D		
LATITUDE (°N)	19.18213	
LONGITUDE (°W)	155.90805	
SALINITY (PPT)	21.3	
pH	7.76	

Table 8. March 10, 2020 Enterococcus Sampling.

At low tide, water samples were collected for laboratory analysis of enterococcus. This sample set was collected in the late morning between 11:10 – 11:25 AM. The tide was at -0.1 ft during this monitoring event and coincided with the lowest tide of the day at 11:05 AM. The samples were collected from A, B, C, and D in areas very close to those identified during the preliminary site investigation. The salinity probe was used to identify the closest point of groundwater mixing with the marine environment, however at sites A, B, and D, water was actively observed to be flowing out of the sand and rocks with no tidal influence. The exact sample locations are shown in the table on the following page.

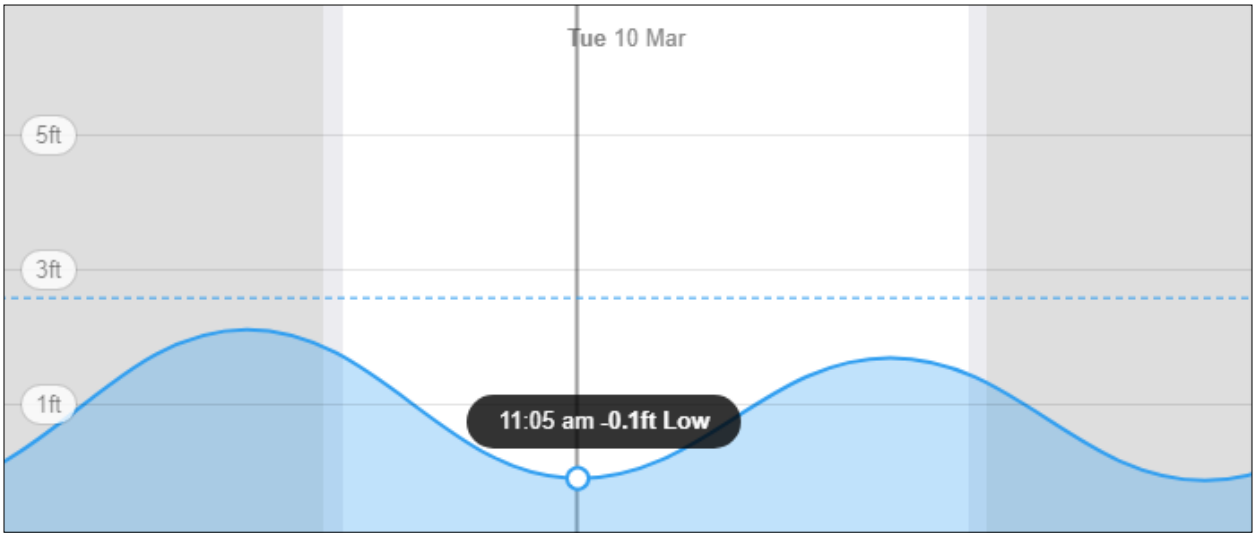

Figure 6. Tide chart for March 10, 2020 sampling at low tide.

The enterococcus analytical results are presented in the table below and will be discussed further in later sections of this report. These results are presented in *Most Probable Number* or *MPN*, and for the purpose of this report will be abbreviated as # and will be filled in by the numerical value, when available, as a unit of concentration (per 100 mL).

Miloli'i Water Quality Investigation					
Analysis method: IDEXX (E.Cocci)					
March 10, 2020					
Day 2	Location	# / 100 mL	Day 2	Location	# / 100 mL
High Tide	A	63	**Low Tide**	A	30
	B	269		B	120
	B-Freshwater	305		C	256
	C	10		D	0
	D	0		D - Replicate	0

Table 9. March 10, 2020 Enterococcus laboratory analysis results.

MARCH 10, 2020 – LOW TIDE		
LOCATION A		
LATITUDE (°N)	19.18316	
LONGITUDE (°W)	155.90704	
SALINITY (PPT)	13.6	
pH	7.24	
LOCATION B		
LATITUDE (°N)	19.18255	
LONGITUDE (°W)	155.90714	
SALINITY (PPT)	12.6	
pH	7.11	
LOCATION C		
LATITUDE (°N)	19.18245	
LONGITUDE (°W)	155.90739	
SALINITY (PPT)	15.7	
pH	7.89	
LOCATION D		
LATITUDE (°N)	19.1822	
LONGITUDE (°W)	155.90791	
SALINITY (PPT)	8.2	
pH	8.08	

Table 10. March 10, 2020 Enterococcus Sampling.

On March 11, 2020, water samples were collected for laboratory analysis for enterococcus at two tidal events during the day. At the morning high tide, samples from A, B, B-Freshwater, C, and D were taken between 6:45 – 7:00 AM. The tide was at 1.6 ft during this monitoring event. The highest morning tide was at 5:19 AM and measured at 1.9 ft, however it was not practical to collect water samples at this time. The samples were collected in areas near the low salinity locations detected during the preliminary site investigation. The salinity probe was used to identify the closest point of groundwater mixing with the marine environment for optimum groundwater and enterococcus detection. The exact location of this sample location is shown in the tables below.

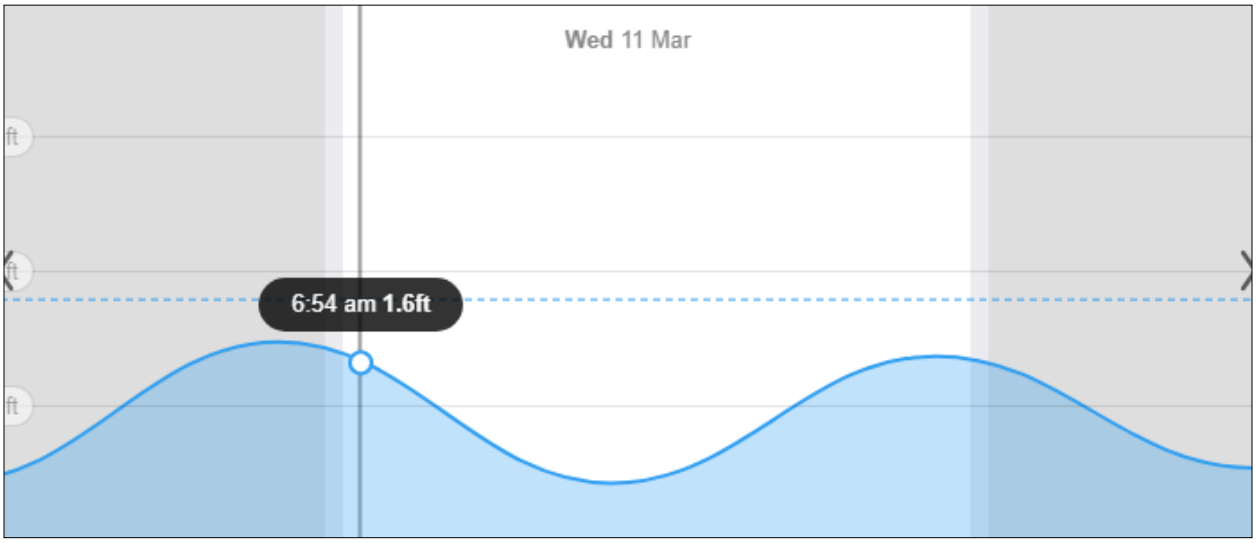

Figure 7. Tide chart for March 11, 2020 sampling at high tide.

MARCH 11, 2020 – HIGH TIDE		
LOCATION B – FRESH WATER		
LATITUDE (°N)	19.1825	
LONGITUDE (°W)	155.90694	
SALINITY (PPT)	16.3	
pH	7.05	

Table 11. March 11, 2020 Enterococcus Sampling at Fresh Water Location.

MARCH 11, 2020 – HIGH TIDE		
LOCATION A		
LATITUDE (°N)	19.18254	
LONGITUDE (°W)	155. 90707	
SALINITY (PPT)	20.8	
pH	7.42	
LOCATION B		
LATITUDE (°N)	19.1825	
LONGITUDE (°W)	155.90694	
SALINITY (PPT)	16.3	
pH	7.05	
LOCATION C		
LATITUDE (°N)	19.18246	
LONGITUDE (°W)	155.90746	
SALINITY (PPT)	27.9	
pH	7.72	
LOCATION D		
LATITUDE (°N)	19.18213	
LONGITUDE (°W)	155.9085	
SALINITY (PPT)	29.1	
pH	7.81	

Table 12. March 11, 2020 Enterococcus Sampling.

At low tide, water samples were collected for laboratory analysis of enterococcus. This sample set was collected in the late morning between 11:10 – 11:20 AM. The tide was at -0.2 ft during this monitoring event and was taken just before the lowest tide of the day at 11:41 AM. The samples were collected from A, B, C, and D in areas very close to those identified during the preliminary site investigation. The salinity probe was used to identify the closest point of groundwater mixing with the marine environment, however at sites A, B, and D, water was actively observed to be flowing out of the sand and rocks with no tidal influence. The exact location of this sample location is shown in the table below.

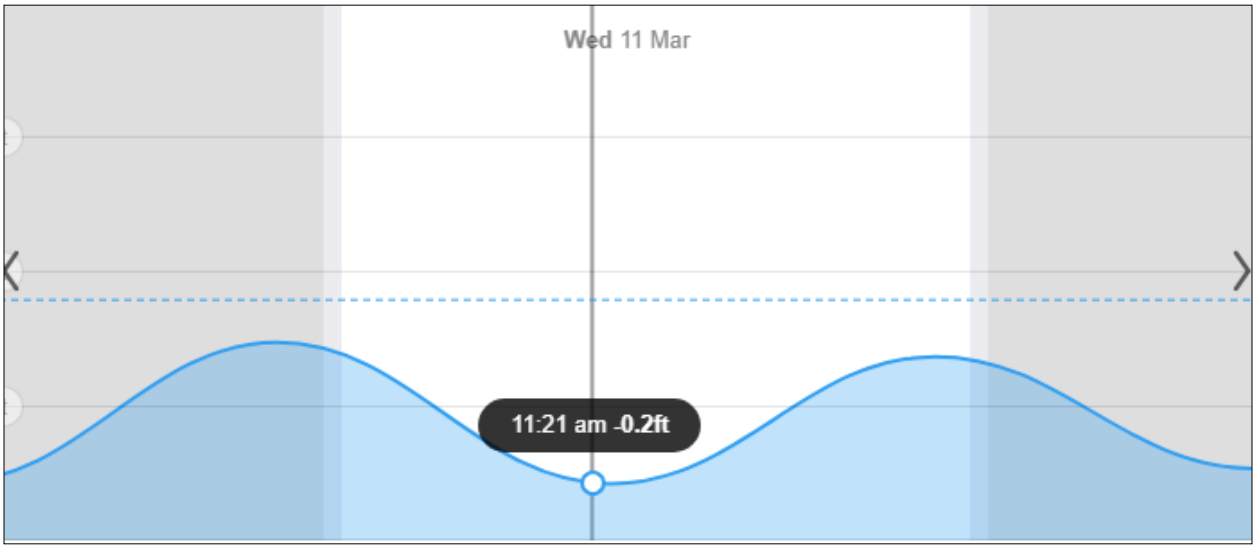

Figure 8. Tide chart for March 11, 2020 sampling at low tide.

The enterococcus analytical results are presented in the table below and will be discussed further in later sections of this report. These results are presented in *Most Probable Number* or *MPN*, and for the purpose of this report will be abbreviated as # and will be filled in by the numerical value, when available, as a unit of concentration (per 100 mL).

Miloli'i Water Quality Investigation					
Analysis method: IDEXX (E.Cocci)					
March 11, 2020					
Day 3	Location	# / 100 mL	Day 3	Location	# / 100 mL
High Tide	A	41	**Low Tide**	A	74
	B	146		B	266
	B-Freshwater	243		C	275
	C	20		D	10
	D	10		D-Replicate	10

Table 13. March 11, 2020 Enterococcus laboratory analysis results.

MARCH 11, 2020 – LOW TIDE		
LOCATION A		
LATITUDE (°N)	19.18316	
LONGITUDE (°W)	155.90706	
SALINITY (PPT)	13.6	
pH	7.23	
LOCATION B		
LATITUDE (°N)	19.18256	
LONGITUDE (°W)	155.90714	
SALINITY (PPT)	13.1	
pH	7. 12	
LOCATION C		
LATITUDE (°N)	19.18246	
LONGITUDE (°W)	155.90744	
SALINITY (PPT)	15.8	
pH	7.78	
LOCATION D		
LATITUDE (°N)	19.18223	
LONGITUDE (°W)	155.90794	
SALINITY (PPT)	18.5	
pH	8.06	

Table 14. March 11, 2020 Enterococcus Sampling.

ENTEROCOCCUS RESULTS AND DISCUSSION

The tables below summarize the water quality investigation results for enterococcus at each location. The data tables are color-coded green and yellow, for high and low tides, respectively. The bacteria quantities are presented as the number of colonies per 100 mL of sample. The average concentrations are shown in the last line of each table. Bacterial concentrations greater than 130 per 100 mL exceed the recommended limits for recreational water uses.

Location A is the north most monitoring area and is furthest from the beach park. The local residents have commented that this is a known "spring" that people use to rinse off. During the sample collection on the second day (March 10), a resident was collecting buckets of water from this area to use to wash his boat. In general, the results were relatively consistent. The first day detected the greatest bacteria concentration of 173 per 100 mL. The remaining days' samples were between 30 – 74 per 100 mL and were below the recommended bacterial concentration threshold.

Miloli'i Water Quality Investigation		
Analysis method: IDEXX (E.Cocci)		
	Date	# / 100 mL
Location A	3/9/2020	173
	3/10/2020	63
	3/10/2020	30
	3/11/2020	41
	3/11/2020	74
	$\bar{x}$ =	76

Table 15. March 9 – 11, 2020 Enterococcus laboratory analysis results at Location A.

Location B is in the corner opposite of "A" and is near the entrance of the beach park near the pavilion. The source of groundwater was not found at high tide on March 9th; therefore, no sample was taken. The enterococcus concentrations were very high and exceeded the 130 per 100 mL in all samples except the sample taken on March 10th at low tide (120 per 100 mL).

At high tide, B-Freshwater had water available for sampling on the mauka side of the beach park access road. At low tide, this water source was dry. The concentrations were highest from B-Freshwater. This ditch had an average bacteria level of 305 per 100 mL and is nearly triple the limit for recreational waters. Comparison of the values taken at high tide from B and B-Freshwater shows that B has a significant reduction in bacteria. This is likely due to dilution once the groundwater from B-Freshwater reaches the ocean and is diluted by salt water. The lowest salinity was determined prior to sample collection for enterococcus to ensure the sample had the most ground water possible in each sample. The groundwater in this area (B and B-Freshwater) was determined to be significantly contaminated with enterococcus during this monitoring period.

Miloli'i Water Quality Investigation		
Analysis method: IDEXX (E.Cocci)		
	Date	# / 100 mL
Location B	3/10/2020	269
	3/10/2020	120
	3/11/2020	146
	3/11/2020	266
	x̄ =	200

Miloli'i Water Quality Investigation		
Analysis method: IDEXX (E.Cocci)		
	Date	# / 100 mL
Location B Freshwater	3/9/2020	368
	3/10/2020	305
	3/11/2020	243
	x̄ =	305

Table 16. March 9 – 11, 2020 Enterococcus laboratory analysis results at Location B and B-Freshwater.

The samples taken at Location C were taken just below the pavilion wall near the mid-point of the pavilion. The counts were relatively low at high tide (between 10 and 51 per 100 mL). This is likely due to significant dilution since the water was about 2 feet deep. At low tide, ground water could be observed to be flowing out of the rocks and therefore would be more concentrated ground water samples. At low tide the enterococcus concentration was between 256 and 275 per 100 mL and are above the threshold for recreational waters. The groundwater in this area was determined to be significantly contaminated with enterococcus during this monitoring period.

Miloli'i Water Quality Investigation		
Analysis method: IDEXX (E.Cocci)		
	Date	# / 100 mL
Location C	3/9/2020	51
	3/10/2020	10
	3/10/2020	256
	3/11/2020	20
	3/11/2020	275
	x̄ =	122

Table 17. March 9 – 11, 2020 Enterococcus laboratory analysis results at Location C.

Location D was a shallow marine cove fronting the beach park. This area seemed to be the most used by recreational beach visitors. Virtually no enterococcus was measured at this location. An extra sample was taken near Location D on the first day due to a low salinity pocket detected about 20 feet away from where the Location D sample was taken; this sample had no enterococcus detected. Two replicate samples were taken on March 10 and 11 as a quality control check. Both samples came back identical to the normal grab sample taken showing both the sampling and analytical methods were performed without detectable error.

Miloli'i Water Quality Investigation			
Analysis method: IDEXX (E.Cocci)			
Location D	Date	# / 100 mL	
	3/9/2020	10	
	3/9/2020	0	Extra
	3/10/2020	0	
	3/10/2020	0	
	3/10/2020	0	Replicate
	3/11/2020	10	
	3/11/2020	10	
	3/11/2020	10	Replicate
	x̄ =	5	

Table 18. March 9 – 11, 2020 Enterococcus laboratory analysis results at Location D.

The map below shows the sampling areas, date, and analytical results for the corresponding area.

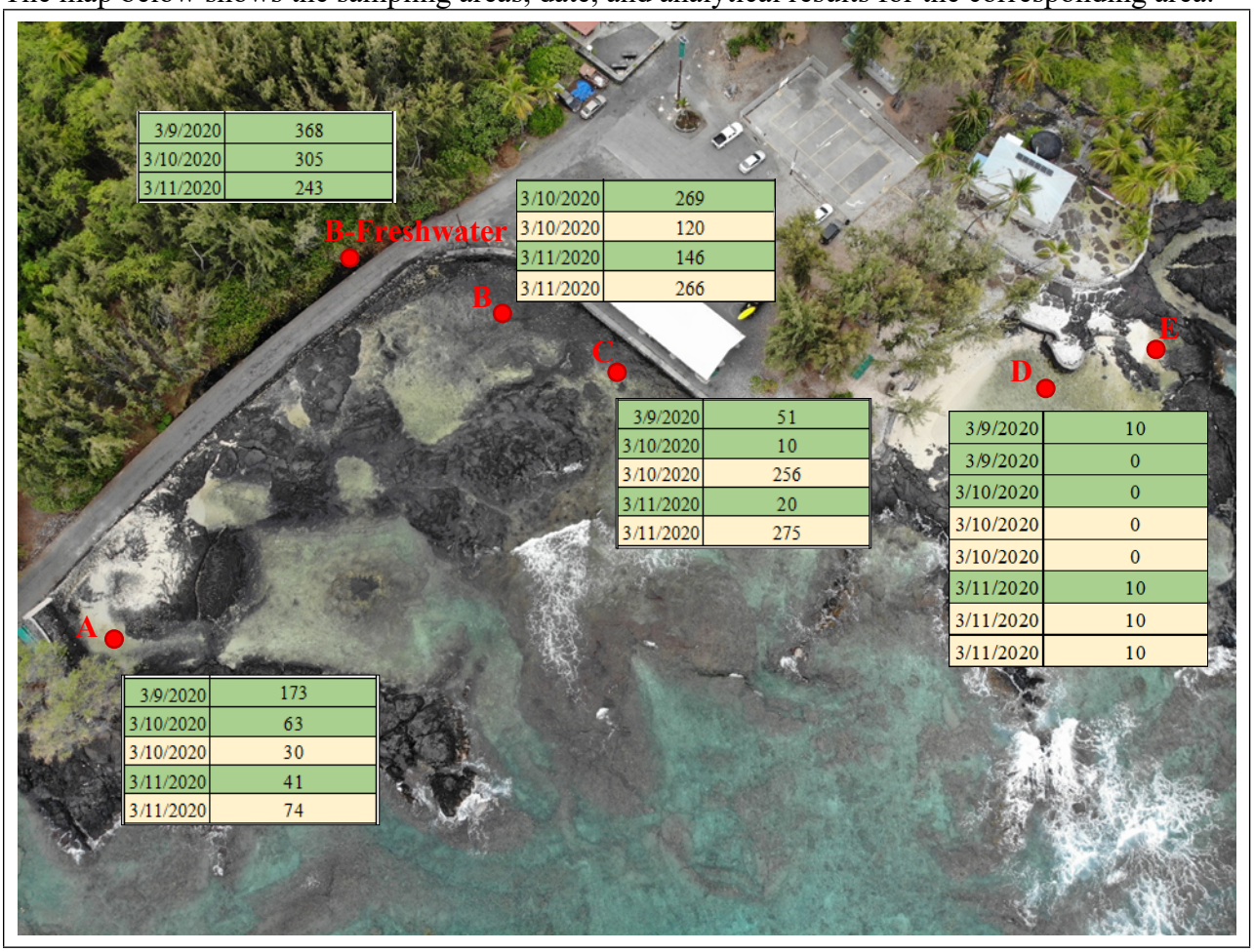

Figure 9. Enterococcus sampling and results

ASSESSMENT OF EXISTING WASTEWATER SYSTEM

IWS CONDITION ASSESSMENT

A site investigation and assessment of the existing IWS was conducted on March 10, 2020. The configuration of the IWS was confirmed with the as-builts of the system that was provided by the County and DOH.

The septic tank covers were opened and observed. The inflow side of the septic tank was full of solids filled to the invert or base of the inlet pipe. The outflow side of the septic tank was full with a liquid level at the outlet pipe invert or base. Although the effluent levels in the septic tank were observed to be normal, the walls of the septic tank risers indicate the tank is overloaded where the effluent and liquid layer fill to the bottom of the lid. The consistency of the effluent in the inflow septic tank does not appear typical. The inflow septic tank was observed to be filled with thick sludge. The outflow septic tank liquid appeared to have more than typical amount of scum. The liquid should have less scum and be clearer. It was also observed that the inflow septic tank baffle pipe was clogged. The outflow septic tank baffle pipe was observed to have a plug whereas the inflow baffle pipe did not. Refer to photographs below.

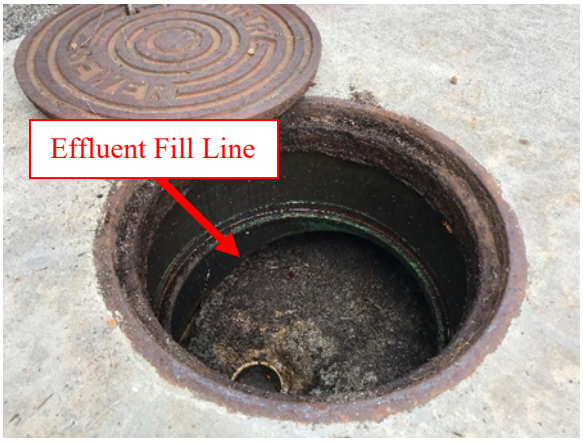

Photo 1 - Septic Inflow

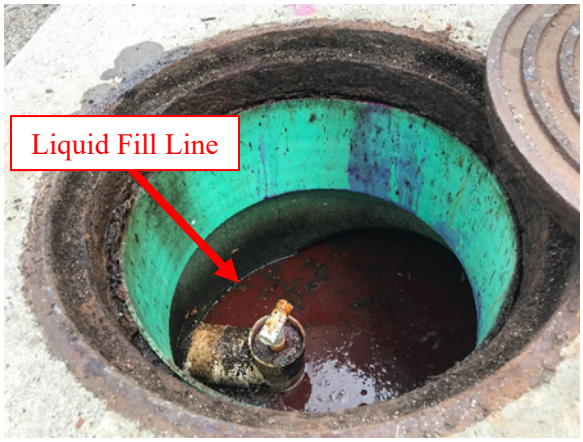

Photo 2 - Septic Outflow

There was water observed on the men's bathroom floor but seemed to be a result of campers filling large water containers. Restroom fixtures did not back up when toilets flushed, or sinks turned on.

The leach field distribution box and inspection ports were not inspected because both were unable to be opened. The surface of the leach field did not show any signs of failure such as effluent or wet spots on the leach field surface, greener vegetation growth over the leach field surface or noticeable odors.

DYE TEST OBSERVATION

A dye test was performed originating at the septic tank for the park's comfort station. Approximately 0.5 gallons of concentrated red tracer dye was added directly to the second chamber of the septic tank on March 10, 2020. This quantity of dye was calculated to treat 6,000 gallons of effluent and still be detectable to the human eye. The effluent would carry the dye through the leach field. If the effluent and dye reached the groundwater table, then the dye was expected to manifest in the marine waters fronting (or surrounding) the beach park.

MARCH 10 – 11, 2020 – DYE TEST IN SEPTIC SYSTEM

Table 19. Dye Test Photographs

The photographs on the following page show the site investigation performed over the course of two days at the beach park. In general, the site appeared to be in good surface condition. No major cracking was observed around the septic tank casings and access covers. No ponding or

depressions were observed, both of which may indicate failure of the treatment and disposal system. The first chamber of the septic tank was observed to be very full of solids; the picture was not included in this report. It is recommended that the septic tank be pumped regularly to remove solids and to allow for better function out of the existing IWS.

The second row of pictures show images taken from the second chamber before and after the dye was added. The photograph on the left was taken before the dye and the photograph on the right was taken after the dye was added. The effluent turned a bright red color. Observations of the surrounding marine waters were conducted every 30 minutes throughout the day; no dye was detected in the waters surrounding the beach park.

On March 11, 2020, dye was still observed to be present in the septic tank, although it was significantly degraded as seen in the last photograph in the bottom row of the table. Observations continued until 12 noon. Daily MBP users (school staff and maintenance staff) were informed of the testing performed over the two days and were asked to note any dye observed after water quality monitoring personnel had left the site. No dye was reported to have been observed by school staff or maintenance staff since leaving the site.

DISCUSSION OF WATER QUALITY INVESTIGATION & IWS ASSESSMENT

The water sampling data obtained in this study show consistent data collection and reproducible results. The relative enterococcus concentrations measured at each sampling area were consistent within the site. Any fluctuations can be explained through the tidal differences and dilution of ground water by ocean water. The results and findings presented have limitations due to the short duration of the study. A longer monitoring period may show seasonal effects or other periodic effects that were not captured in the current study.

In general, the waters surrounding Miloli'i Beach Park are being negatively impacted by enterococcus. The greatest concentrations of enterococcus measured were from Areas B, B-Freshwater, and C. These areas are close in proximity and may be from similar groundwater sources such as upland residences or facilities. Area A measured moderate enterococcus concentrations, and only exceeded the recommended threshold on one sampling event. The lowest concentration of enterococcus measured in the marine waters were at Area D (including E) which had virtually no bacteria present.

Due to the low elevation of the beach park's leach field, it was hypothesized the waters nearest to the leach field and private residence (Area D) would be highest in enterococcus. This area had the lowest enterococcus measured in the marine waters. The results may be explained by decreased usage of the comfort station during the week and therefore little to no discharge to the leach field. The dye test was also unsuccessful in tracing the path of treated effluent from the septic system.

A worthwhile follow up investigation would be to take grab samples at Area D during and immediately after a large party held at the beach park. Performing a dye test during a period of high flow may also be more successful in determining the ultimate output of the effluent after it passes through the leach field.

The IWS site investigation and assessment indicate that the existing IWS appears to be adequate during low to normal usage periods. There were no signs indicating the IWS leach field was clogged and discharging under treated effluent and negatively affecting the surrounding waters. It would also be worthwhile for a follow up investigation to assess the IWS immediately after a large party held at the beach park.

Observations of the septic tank may indicate the existing IWS is overtaxed and under sized during high usage periods based on the observed effluent and liquid levels on the risers. However, the over taxing of the IWS was not confirmed during the short duration of the investigation and should be verified in the future.

It would also be beneficial for the quarterly pumping of the septic tanks to include opening the distribution box and inspection ports of the leach field to check the liquid levels.

Due to the short duration of the sampling period of the investigation and IWS assessment conducted, it appears that the existing IWS is not discharging undertreated effluent and negatively affecting the surrounding waters. As stated, further investigate, especially during high usage period, would be beneficial to provide a more accurate evaluation of the IWS. Although the

findings in the Water Quality Assessment suggest the existing IWS is adequate, modifications to the existing wastewater treatment system could better ensure that untreated effluent is not discharged to the surrounding waters during periods of high usage or other effects that were not identified in this limited investigation.

WASTEWATER SYSTEM OPTIONS

This feasibility study considers the following sewage system options:

1) Holding Systems
    a. Holding Tank
    b. Evaporative Toilet System
    c. Prefabricated Waterless Restroom
2) IWS Treated Collection System
    a. Anua BioCoir Coconut Fiber Biofilter
    b. BioBarrier HSMBR 1.5
    c. Nayadic Wastewater Treatment System (M1200)

Holding systems presented either eliminate effluent discharge or significantly reduce discharge to the surrounding environment through the absorption field. The IWS systems presented will provide higher-quality effluent as they provide more treatment than the existing system which would decrease potential high bacteria levels in the surrounding waters.

Analyses include initial material costs, construction and operation/maintenance costs of the systems (where available), potential environmental impacts, and design challenges.

OPTION 1 – HOLDING SYSTEM

Holding system options temporarily holds waste in tanks and vaults and requires pumping services. Frequency of required pumping services varies between the three options.

This section examines the following options:

1A. Holding Tank
1B. Evaporative Toilet System
1C. Prefabricated Waterless Restroom

The holding tank option would replace the existing septic tank and absorption bed and contain all black and gray water generated by the comfort station. The evaporative toilet system and prefabricated waterless restroom would replace the existing comfort station with the possibility of connecting sinks to the existing septic tank and absorption bed to treat gray water as these options only handle black water generated by toilet usage.

OPTION 1A: HOLDING TANK

A holding tank is a sealed, buried tank used to collect waste from a facility or dwelling and temporarily stores it for subsequent removal and transport to an approved treatment or disposal site. The tank needs to be designed, constructed, and installed to maintain water-tightness, must not contaminate surface or groundwater, and its location must minimize public exposure to untreated waste. The following analysis assumes a weekly pumping service frequency and an average daily sewage flow of 1,000 gallons per day.

The following holding tank calculation is based on the "Recommended Standards and Guidance for Performance, Application, Design, and Operation & Maintenance Holding Tank Sewage System" dated July 2012 and prepared by the Washington State Department of Health Division of Environmental Health.

NOV = (DSF)(PSF)

NOV – normal operating volume (the liquid storage below the time-to-pump alarm level)
DSF – daily sewage flow
PSF – pumping service frequency (number of days between pumping, not to exceed 7 even if service is on-call)

NOV = (1000 gal/day)(7 days)
= **7000 gal**

RSV = (DSF)(3)

RSV – reserve storage volume (the liquid storage above the "time-to-pump" alarm level, and below invert of inlet pipe)

RSV = (1000 gal)(3)
= **3000 gal**

TLVC = NOV + RSV

TLVC – total liquid volume capacity

TLVC = 7000 gal + 3000 gal
= **<u>10,000 gal holding tank</u>**

Therefore, the recommended minimum holding tank size is 10,000 gallons.

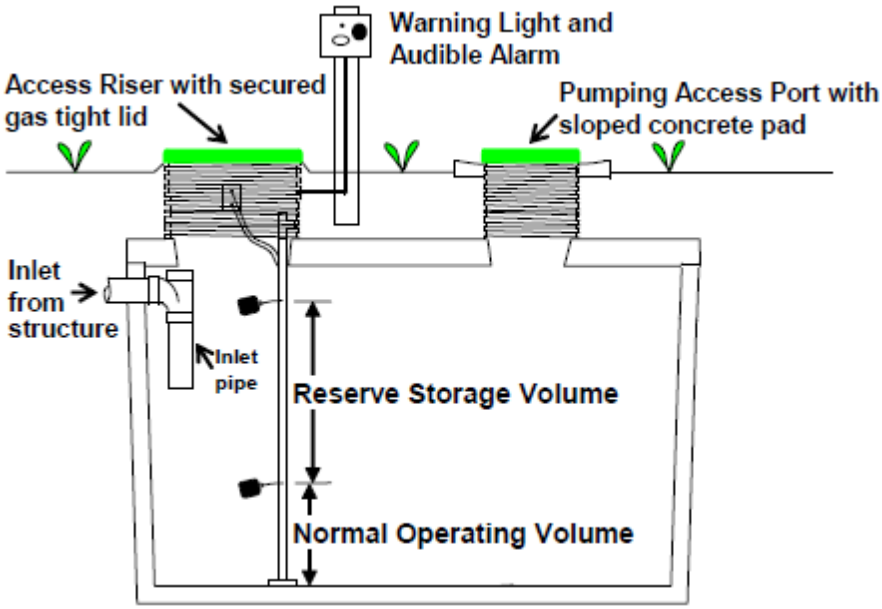

Figure 10. Typical Holding Tank Sewage System
(Washington State Department of Health)

Both concrete and fiberglass holding tanks were considered. A 10,000-gallon concrete holding tank is the largest size offered on the Jensen Precast website. However, this type of tank is not suitable for sitting within the high-water table. An alternate option would be two 5,000-gallon concrete tanks. The dimensions of the tank are 8'-6"W x 17'-6"L x 8'-2" H. The minimum excavation width is 9'-6", and minimum excavation length is 18'-6". A 5,000-gallon Jensen Precast tank is $35,000 for a total of $70,000 for two tanks plus shipping (approximately $4,400.00). See Attachment 2 for price quote and catalog cuts.

Xerxes, a manufacturer of fiberglass holding tanks that works with International Wastewater as its distributer in Hawaii, quoted $54,707.77 for a 10,000-gallon tank and $38,102.35 for a 5,000-gallon tank. These prices include the fiberglass tank, concrete deadmen to anchor the tank down, an alarm system to indicate when the tank is reaching capacity, and shipping and handling.
Fiberglass tanks are corrosion-resistant, rustproof, and watertight. Xerxes claims that their tanks are designed to accommodate heavy traffic loads and high water-table conditions. Concrete tanks are susceptible to rust if the steel reinforcement is exposed through cracks in the concrete. Xerxes tanks are cylindrical in shape and domed at both ends. This minimizes pockets in which scum or sludge can accumulate. The 10,000-gallon Xerxes holding tank is 8 ft in diameter, with a tank length of 31'-6.5" and weighs 3,000 pounds. The 5,000-gallon Xerxes holding tank is 8 ft in diameter, with a tank length of 17'-8.5" and weighs 1,700 pounds. See Attachment 2 for Xerxes fiberglass tank information.

Due to the size of the tanks and the space constraints of the site, the existing absorption bed would have to be removed to install either the 10,000-gallon tank or the two 5,000-gallon tanks. Since

the holding tanks would not be discharging any effluent, the usage of the absorption bed would no longer be necessary.

Because the holding tanks do not provide any treatment for the wastewater, it could potentially be a source of nuisance odors. Note that venting of the exhaust should be above the roof line of the building. The high groundwater table may also be an issue, and the tank would need to be anchored.

A local pumping company provided a rough quote for pumping costs, assuming we would pump the holding tanks weekly, and have an average of 7,000 gallons. The estimated weekly pumping cost for two 3,500-gallon trucks (including travel time) is $2,500.

Conclusion

Usage of holding tanks would eliminate the possibility of undertreated effluent leeching into the ground and contaminating the surrounding waters due to the containment and storage of the effluent which would be pumped out and properly disposed of.

However, the cost of the holding tanks to accommodate the 1,000 gpd rate is a relatively high upfront cost. The cost of pumping, hauling, and disposing of the waste at an approved facility is also very costly on a long-term basis. Given the weekly costs calculated above, one year of pumping could cost about $130,000.

Due to the high cost of maintaining the system, the large excavation required and the large footprint of the tanks, **this system is possible but not recommended** for Miloli'i Beach Park.

OPTION 1B: EVAPORATIVE TOILET SYSTEM

Information for the evaporative toilet system was provided by "Enviro Loo" (manufacturer). The company is stationed in South Africa and has provided sanitation facilities to millions of people worldwide. Notably in the United States, the "Enviro Loo" has been installed in state parks in California, Colorado, Ohio, Oregon, and Texas.

The "Enviro Loo" is a waterless toilet system that utilizes sun and wind to transform waste into a neutral material for disposal. The manufacturer claims that the system is odorless with zero discharge, does not use chemicals or electricity, and has a life span in excess of 50 years. They also claim that air flow and heat from the sun dehydrates the solid waste to roughly 5% of its original volume, while the liquid waste evaporates. Negative pressure prevents odors from escaping through air pipes and the toilet bowl.

Waste enters the underground container via toilet bowl, where solid wastes remain on a sloped drying plate with liquid draining to the bottom. Waste is exposed to a continuous flow of air and an organic starter pack. Air flow and heat from the sun dehydrates the solid waste. Fecal pathogens are destroyed due to the prolonged residence time in the unit. Waste is then transferred to a drying bag under the vent pipe for 6 months, which kills ascaris worm cysts (helminths). Per Enviro Loo, the average person generates approximately 1.37 liters of urine and 0.14 kg of solid waste a day. See Attachment 3 for additional information on the Enviro Loo.

Figure 11. Enviro Loo Single Unit

Figure 12. Enviro Loo Portable Unit

The manufacturer has informed our office that several units were delivered to Lahaina on Maui for off-grid cabins with no access to infrastructure and that they have been contacted by several National Parks in Hawaii. Brigham Young University also recently ordered a C-60 Commercial Enviro Loo in December 2019 as well as a couple of private residences/cabins.

Different models can accommodate a maximum of 10 to 40 users per day. For our condition, the manufacturer recommended their C-60 model, which requires excavating a pit that is 8.5' L x 4' W x 24-30" H for underground installation. However, the unit can also function above ground if the toilet is installed with stairs. The manufacturer also recommended the addition of a urinal if the unit were to be utilized as Unisex units.

The cost of the recommended unit is $4,250 plus the cost of shipping. The optional urinal would add $125 to the cost of the unit. Majority of the customers install the systems themselves. Installation includes burying the unit, anchoring it, and backfilling. The existing comfort station would have to be demolished and reconstructed around the evaporative toilets since the unit must

be buried. The company can also send someone from their staff to train users. Cost for training merely includes cost of transportation. Training would take one day, and maintenance training could be handled over the phone.

Conclusion

While evaporative toilets do provide a cost-effective solution for toilet waste, it does not provide treatment for gray water from sink waste. Per the manufacturer, a waterless hand-cleaner could be provided in place of sinks. This method has been allowed in the State of Texas. However, this would require additional maintenance and costs to adequately provide and refill the waterless hand-cleaner with possible installations of anti-theft mechanisms. With reconstruction of the comfort station to install the evaporative toilets, it is possible to connect sinks to the existing septic system to treat gray water.

Maintenance can be performed by County Maintenance employees after a one-day training session. However, maintaining the system may require contact with fecal waste. Raking of the dried waste and periodically placing it into a drying bag to hang from the system is required. The manufacturer requires protective clothing when removing waste from the unit (mask, rubber gloves), and advises that the maintenance staff should receive preventative vaccinations against Hepatitis A and B.

The system also relies on different environmental factors to perform at its optimum level including temperature, air pressure, wind velocity, and humidity. These factors are beyond the owner's control. The manufacturer states that in locations where wind speeds are low and humidity is high, a solar-powered fan can be installed at an additional cost.

It is important to note that daily cleaning of the toilet bowl with a specialized organic granular Enviro Loo toilet cleaner is recommended. Household and industrial cleaners cannot be used. Therefore, the costs of purchasing and shipping the specialized toilet cleaner would also be factored into maintenance costs.

Usage of evaporative toilets would eliminate the possibility of undertreated effluent leeching into the ground and contaminating the surrounding waters due to the containment of the effluent and the disposal of the decomposed solid waste.

Although the cost of the toilet system itself is relatively inexpensive, initial construction to install (demolishing and reconstructing the comfort station) would be relatively high and long-term maintenance required adds to labor and material costs. The County would be responsible for daily cleaning of the units with specialized cleaner, possibly waterless hand-cleaner refilling, and having maintenance crews encounter fecal waste. Due to these factors, **this system is possible but not preferred** for Miloli'i Beach Park.

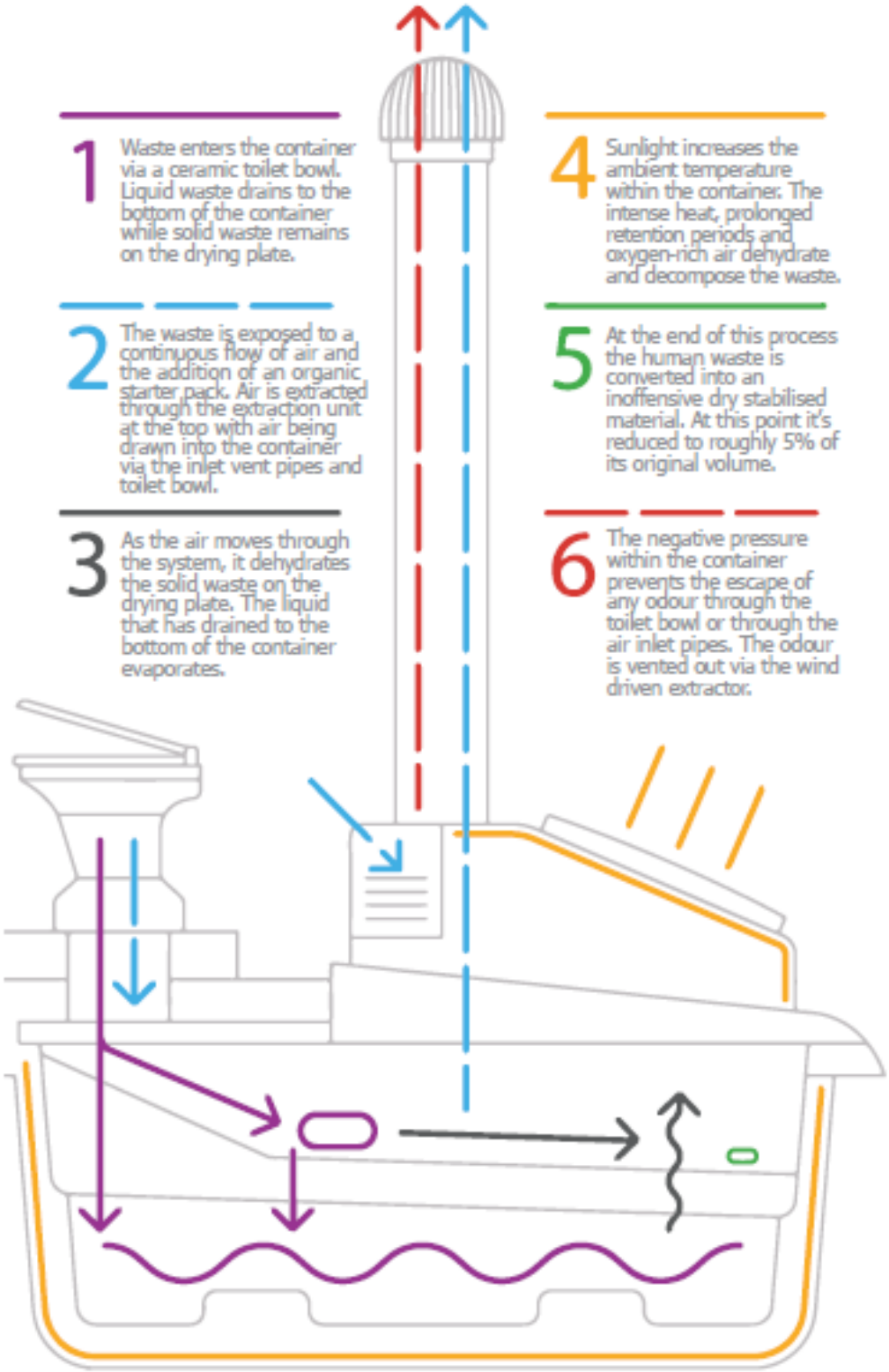

Figure 13. Enviro Loo Treatment Process

OPTION 1C: PREFABRICATED WATERLESS RESTROOM

Information for the prefabricated waterless restroom was provided by Biological Mediation Systems, LLC (manufacturer). The company is based in Colorado and claims to be the only full line manufacturer of custom restroom facilities and buildings in the industry. They offer the WRS (Waste Reduction System) Vault Evaporator waterless wastewater system. Their systems are currently in use at ski resorts, trails, camps, highway rest stops, parks, and guest lodges.

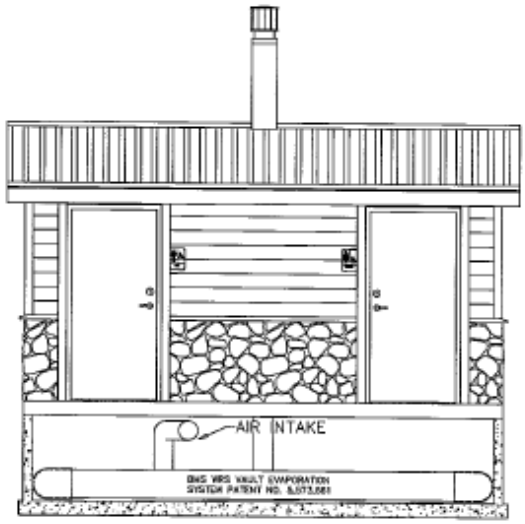

Figure 14. WRS Vault Evaporator

The WRS system is capable of high usage and the system reduces waste by evaporating liquid and dehydrating waste and has little to no maintenance. Occasional pumping is required, which is determined by the manufacturer's computer program.

The system eliminates flush toilets and claim to be odor free. It is safe for the environment, has zero discharge, and does not use chemicals. See Attachment 4 for more information on the WRS building.

Figure 15. Prefabricated Restroom in Frisco, Colorado

Since the system is a fully operational restroom, they need to be outfitted with standard AC or solar DC power for restroom lights and exhaust/ventilation fans. Per the manufacturer, no systems are currently installed in Hawaii. A standard one toilet WRS building costs about $60,000 plus shipping, installation, and maintenance costs. A standard two toilet model costs about $100,000 plus shipping, installation, and maintenance.

The WRS system utilizes an underground vault, which would need to be constructed by a local pre-cast company. With concerns of a shallow groundwater table, this vault would need to be weighed down and waterproofed.

Conclusion

Like the evaporative toilet, the WRS system would eliminate the possibility of undertreated effluent leeching into the ground and contaminating the surrounding waters due to the containment of the effluent and the disposal of the decomposed solid waste. The system would also replace the existing comfort station facilities which would have to be removed to provide enough space for installation. Initial installation costs may be high since the existing structure would have to be demolished. The manufacture also stated that special installation is available to hook-up water for sinks. Like the evaporative toilets, it may be possible to connect the sinks to the existing septic system to treat gray water.

Since no systems have been shipped to Hawaii, there may be concerns over high shipping costs and costs to transport the prefabricated building to Miloli'i from the docks. The building would essentially be shipped in its entirety. Also, like the evaporative toilet, the WRS performance rate is based on temperature, humidity, and wind, factors which are beyond the owner's control.

Due to these factors, **this system is possible but not recommended** for Miloli'i Beach Park.

OPTION 2 – IWS TREATED COLLECTION SYSTEM

IWS are composed of a treatment system (i.e. septic tank, aerobic treatment unit (ATU), etc.) and disposal system (i.e. absorption field, mounded system, seepage pit, etc.). The type of treatment and disposal system is predicated on the site evaluation which determines soil percolation rates, depth to groundwater, area of land available for disposal, and other natural constraints. The existing IWS system includes a septic tank and absorption bed.

The HAR 11-62 requires percolation rates for disposal systems to be between 1 and 60 minutes per inch. Because the existing system was approved by DOH, it is assumed that the percolation rate for the absorption bed falls in the HAR 11-62 required rates. It is a possible option to upgrade the treatment unit and maintain the existing absorption field as the disposal system to minimize costs.

The following studied IWS systems will produce treated effluent to be discharged to the existing absorption bed. HAR 11-62 states that the minimum horizontal distance from soil absorption systems and treatment units to streams is 50-feet, to property lines is 5-feet, and to building structures is 5-feet. These systems produce a high-quality effluent output due to additional treatment that the existing IWS does not provide. This would decrease the potential negative impacts to surrounding waters due to less-treated effluent.

For a design flow of 1,000 gallons per day, septic tanks must have a minimum capacity of 1,250 gallons (per HAR 11-62), and ATU's must have a minimum capacity of 1,000 gallons with preloader septic tank, or 1,250 gallons with preloader chamber integrated into the ATU.

This section examines the following options:

- 2A. Anua BioCoir Coconut Fiber Biofilter
- 2B. BioBarrier High Strength Membrane BioReactor (HSMBR 1.5)
- 2C. Nayadic Wastewater Treatment System (M1200)

OPTION 2A: ANUA BIOCOIR COCONUT FIBER BIOFILTER

Anua International is an American manufacturer of products that treat/filter water and air. Anua recently acquired Quantics and expanded their water treatment system options. One of the systems that Anua now offers through the acquisition is a wastewater treatment system called the "BioCoir Coconut Fiber Biofilter," that is used in conjunction with a septic tank and dosing tank. The septic tank effluent flows through an effluent filter into the dosing tank where an effluent pump doses the wastewater to the BioCoir treatment modules. A timed dosed control panel controls the dosing which occurs in short frequent doses over a period of 24 hours. Spray nozzles are used to provide uniform distribution of the effluent over the entire surface area of the coconut fiber (coir) media. As the effluent moves via gravity through the media, it encounters microorganisms that serve to treat the effluent to NSF International Standard 40 Class 1 requirements. A Quantics ATS-GRD-100/80/20 recirculation device is then used to split the flow and discharges 80% back into the treatment system and 20% to the existing absorption. Typical treatment performance includes levels of BOD_5 between ≤10 to ≤30 mg/l, TSS between ≤10 to ≤30 mg/l, and total nitrogen ≤20 ml/l.

Figure 16. Different Models of the BioCoir Treatment Pods

The coir media used in the system are the fibers that constitute the husk of the coconut and is a low-cost, renewable resource. The high lignin content of the fibers results in a durable material and allows free airflow and water movement through the media.

No vehicle traffic should be allowed over or near the system as the pods are not traffic rated.

The system should be able to function with intermittent use as the daily usage of the comfort station varies throughout the week. Under low flow conditions, 100% of the treated effluent discharges back into the treatment system rather than being discharged to the media chambers.

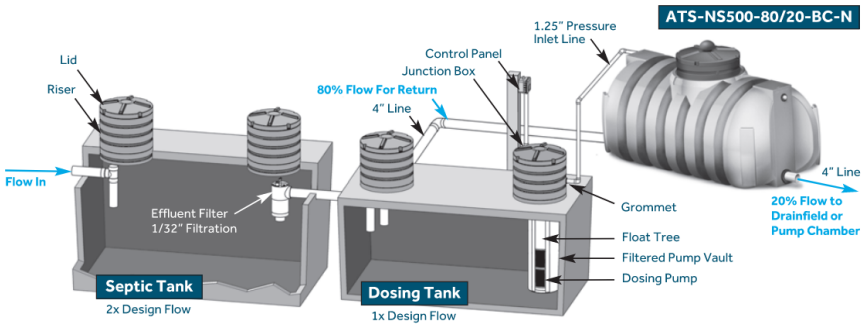

Figure 17. BioCoir Treatment System

Figure 18. Installation of BioCoir System

Per the manufacturer's recommendation, the proposed system consists of utilizing the existing 1,250-gallon septic tank, an additional 1,500-gallon tank that will also serve as the dosing tank, and three BioCoir pods. Effluent will initially enter the existing septic tank, then enter the dosing tank, and then the BioCoir pods where 80% of the effluent will recirculate back into the dosing tank for further treatment and 20% will continue to the existing absorption field. It was also recommended to have a highwater gravity bypass line from the pretreatment tanks to the absorption bed in the event of a short-lived hydraulic overload of the system. Lastly an alkalinity basin on the recirculation line was recommended since it is anticipated that the waste stream from the bathrooms to be high in ammonia.

The BioCoir pod footprint dimensions are 5-feet by 11-feet and the 1,500-gallon tank is about 5-feet by 15-feet. Installation can usually be completed in a day. Electrical power is required for the two pumps and control panel. The manufacturer is able to work the system to include solar panels that will adequately power the system and noted that with that type of arrangement, it is possible to have they system set to go offline for a couple days (Mon-Wed or Mon-Tues) to do nothing but charge. This also might allow for less panels. Also, with it offline, either on a set schedule or if you get three weeks of clouds, the gravity bypass pipe will allow the system to continue to run the old way as a backup or during the low flow periods. DOH also requires backup generators for IWS systems in the event of power loss to the system.

Due to the space constraints of the site, the existing septic tank will have to be relocated to provide space for the additional tank.

Anua provided quotes for the BioCoir system. Costs are shown below.

<u>BioCoir System</u>:
IM 1530 Dosing Tank: 1,500 gallons
Timed Dose BioCoir Pump: 1
BioCoir pods: 3
26" Diameter Puralinity Basin: 1
Estimated equipment cost + oversight: **<u>$21,649.84</u>**
Estimated shipping cost: **<u>$13,380.00</u>**

ESTIMATED COST: **<u>$35,029.84</u>**

Anua also manufactures a similar system called the Puraflo Peat Biofilter that uses a peat fiber media instead of the coconut coir fibers in the BioCoir system. The Puraflo system components and function work like the BioCoir, however due to the area constraints and shipping costs, it was deemed an impractical and unfeasible option. Per the manufacturer, the shipping costs would be significantly higher than the equipment itself.

The BioCoir system requires regular lifetime semi-annual inspections and maintenance. The manufacturer recommends pumping the septic and dosing tanks every 3 to 5 years. See Attachment 5 for additional information.

Conclusion:

The BioCoir Coconut Fiber Biofilter system would provide additional tank storage to the existing septic tank and add additional treatment with the coconut fiber pods before effluent is discharged to the absorption bed. This would not eliminate effluent discharge but will increase the quality of the discharge to mitigate negative effects to the surrounding waters.

The BioCoir system **seems like a feasible solution**, given its low maintenance and ability to be installed at grade to accommodate the high ground water table. The coconut media is biodegradable and typically needs to be replaced every 7 to 10 years. Typical septic tank and pump tank maintenance also applies which has been ongoing for the existing system. One major benefit of the BioCoir system is the capability to be designed to run off solar panels and scheduled to provide time to charge the system.

OPTION 2B: BIOBARRIER HIGH STRENGTH MEMBRANE BIOREACTOR (HSMBR 1.5)

BioBarrier High Strength Membrane BioReactors (HSMBRs) are manufactured by BioMicrobics and provide primary settling, fecal coliform, BOD, TSS and nitrogen reduction (if needed) using aeration and anoxic zones, and membrane filtration. BioMicrobics claims that the system treats wastewater to 99.9% clean of contaminants and is NSF/ANSI Standard 40 (Class I), 245 (nitrogen reduction), and 350 certified. The system is designed to treat both black water and gray water. Depending on the level of treatment desired, there may be two or three compartment tanks within the system (if nitrogen reduction is desired, there will be three tanks). Effluent produced from the system when it is functioning properly should be clear and odorless, and is suitable for water reuse applications, including toilet flushing and outdoor landscape irrigation (as long as vegetation is not meant for human consumption). This would require additional reuse permitting.

The operation sequence requires no backwash functionality and is completely automated. Due to the shallow groundwater table, this unit can still function partially exposed above ground. The existing septic tank will be used as a settling tank with the two 2,000-gallon tanks with the BioBarrier components following to provide the aeration treatment. The new 2,000 tanks will then be connected to the existing absorption bed.

The following treatment sequence was provided by BioBarrier:

1) In the primary settling zone, a SaniTEE device is used to prevent large solids from entering the treatment zone. [This settling zone acts as the septic tank.]
2) A remote, above-ground blower introduces air (oxygen) into the treatment module to facilitate a robust circulation and aeration of wastewater.
3) Once inside the treatment tank, suspended treatment occurs. Optional LIXOR System can be used for extra aeration for higher than normal BOD concentrations. [LIXOR – submerged aeration system]
4) Immersed in the treatment tank, the BioBarrier module(s) and air grid(s) create an upward flow between membrane plates providing vigorous scouring action.
5) Water passes through the membranes for microfiltration and ultrafiltration processes. The flat-sheet membrane utilizes micro-sized pores for physical separation of the wastewater solids.
6) Clear, odorless, treated water exits the system.

The system requires electrical power for the blower, control panel, and water level float devices. Each HSMBR 1.5 can run on single phase 220V power with full load amps for the blower and pumps totaling about 10 Amps. The amperage is broken down by 0.5 amps for each filtrate pump (2 pumps total) and 9 amps for the 1.5 HP blower. The blower has a starting current of 29.2 amps. The two systems will require a total full load of 40 Amps. DOH also requires a backup generator in the event of power loss. The system's capability of running off solar energy will need to be further examined. Assuming adequate electrical power can be provided via solar panels, the required number of panels will need to be determined by an electrical engineer. DOH also requires IWS systems to have a backup generator in the event of power loss.

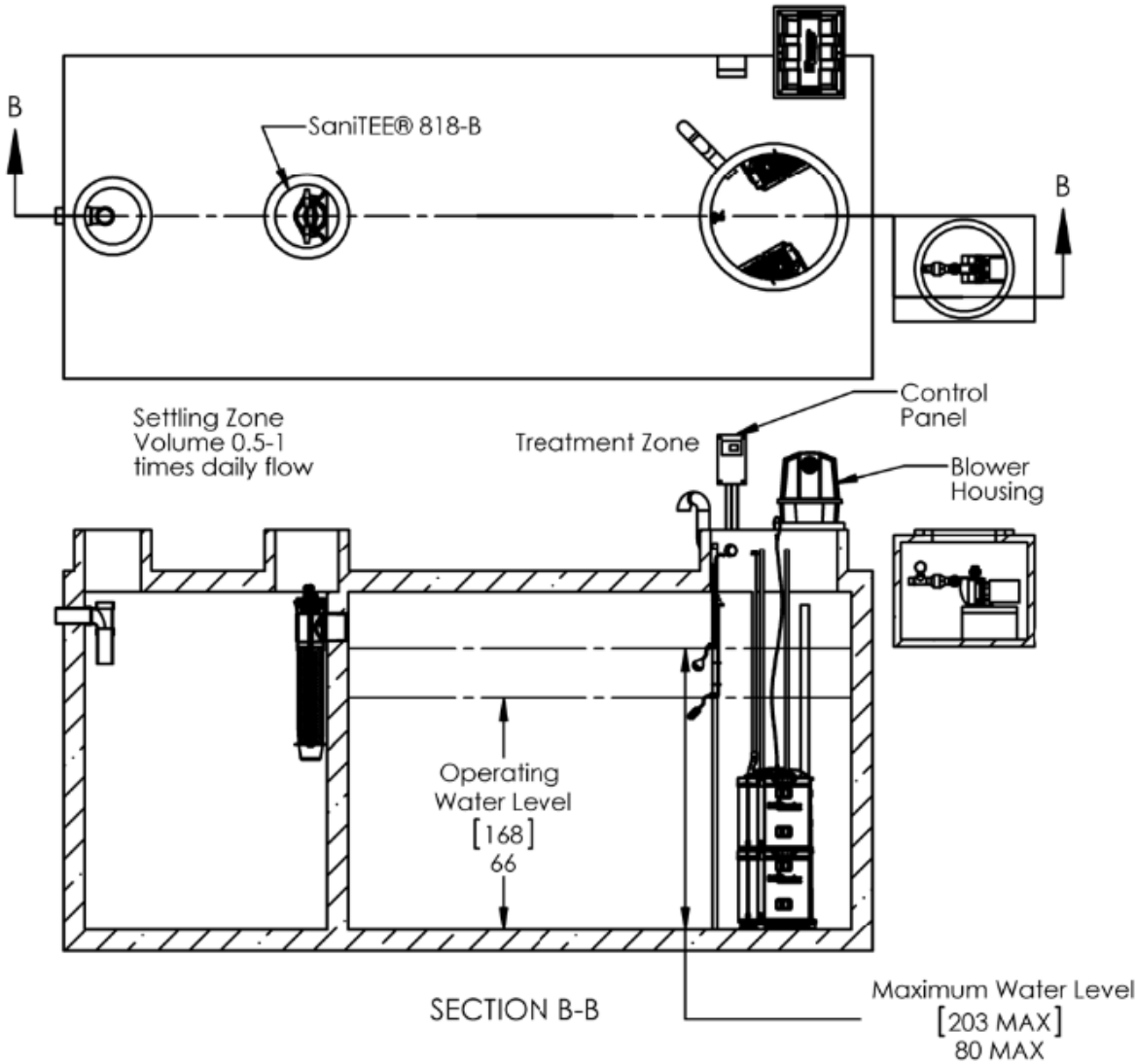

Figure 19. BioBarrier HSMBR 1.5

The BioBarrier HSMBR will function normally even if no wastewater flows during short periods of vacancy. It should be noted that the membranes should always stay wet for optimal performance. Should power loss occur, the system will not stop pumping and will shut down. Effluent will not flow out of the tank ensuring that undertreated effluent does not leave the system and infiltrate in the absorption field. The alarm system will activate, and an operator will be called.

The BioBarrier system provides a very high effluent quality and the sludge wasting schedule would most likely be from no more than once a year to every two years for this application. The system has a lifespan of approximately 15-20 years. Similar systems have been installed in Kahauiki Village on Oahu and in an Oahu and Kona Costco. These are pilot projects and are running in custom tank configurations.

The local distributor of the BioBarrier, Fluid Technologies, has provided a quote of **$127,800.00** for two BioBarrier HSMBR 1.5 systems and tanks, including the construction/installation, UV disinfection systems for added treatment, Mission RTU alarm and monitoring system installation and one year service package (includes backup battery in the event of power loss), sludge pump out and inspections twice a year, and shipping. It should be noted that the UV system will require additional engineering to design the system.

The two tanks to be provided are 2,000 gallons and are 8'-4" L x 5'-10"W. See Attachment 6 for more information on the BioBarrier HSMBR and for the cost estimate.

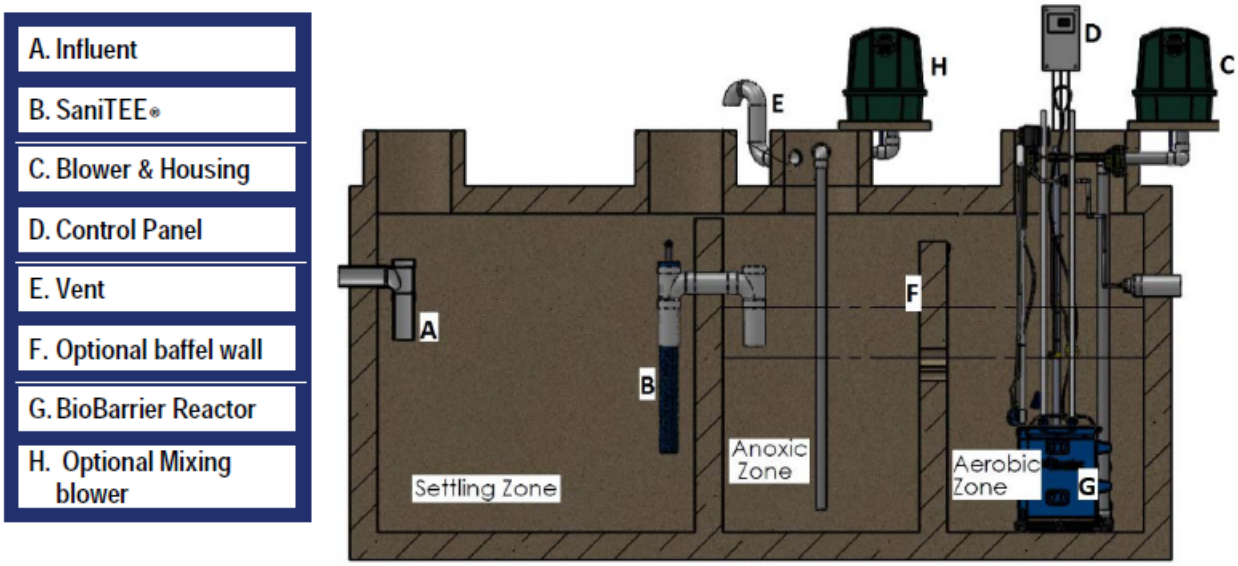

Figure 20. BioBarrier System Components

Conclusion:

Similar to the BioCoir system, the BioBarrier system would provide additional tank storage to the existing system while providing additional treatment through aerobic and UV treatment. This would not eliminate effluent discharge but will increase the quality of the discharge to mitigate negative effects to the surrounding waters.

The BioBarrier High Strength Membrane Bioreactor is a feasible solution to provide adequate wastewater treatment due to its high quality of treatment, and automation provided that the necessary power supply can be provided to run the system. To provide adequate power, either electrical infrastructure improvements will need to be done to the site or further investigation will need to be done to determine if solar panels can provide enough power for the system.

OPTION 2C: NAYADIC WASTEWATER TREATMENT SYSTEM (M1200)

Nayadic Wastewater Treatment Systems are manufactured by Consolidated Treatment Systems and provide primary settling, fecal coliform, BOD, and TSS using an "aerobic" treatment process. When the system is properly functioning, the aerobic treatment causes no offensive odors. The Nayadic system has been certified under ANSI/NSF Standard 40 protocol as a class 2 system and removes more than 95% of wastewater contaminants. The system was designed with the installer in mind and is lightweight, compact, and easy to transport and install. The fiberglass tank is conical shaped which requires less excavation than traditional systems.

Figure 21. Nayadic Unit

Each system includes the fiberglass tank, audible/visual alarm, external compressor and hardware, and a two-year manufacturer's warranty. The fiberglass tank will be installed between the existing septic tank and the absorption bed to provide aerobic treatment before the effluent is disposed of to the bed.

The system uses microbes to naturally perform the wastewater treatment. These bacteria take about six to eight weeks to acclimate themselves to the wastewater and colonize in sufficient concentration that measurable treatment occurs. "Seeding" can be used to eliminate this start-up performance lag. Seeding is accomplished by obtaining about 50 gallons of mixed liquor from another Nayadic unit. The already acclimated, concentrated colony should experience no delay in acclimating to the new unit so that a performance lag may be circumvented. The bacteria are naturally occurring and provides the initial stages of wastewater treatment to break down waste. The aerobic and additional UV treatment then kill off the bacteria prior to being discharged to the absorption field.

The system requires electrical power for the air compressor for recirculation and alarm system. The unit requires 1 phase, 120v, 60Hz, and must be continuous. Per the manufacturer, there have been numerous inquiries about connecting to an off-grid power system, but they have no record of any that have been implemented. A battery system will need to be included to provide the continuous power in the event that the power source is unavailable.

The Nayadic system has low maintenance and only requires routine inspections and period pumping of excess solids. Service to the system can be provided by a locally trained representative. The alarm system will also sound pending any problems. Nayadic systems have been installed throughout Hawai'i Island in both residential and commercial applications.

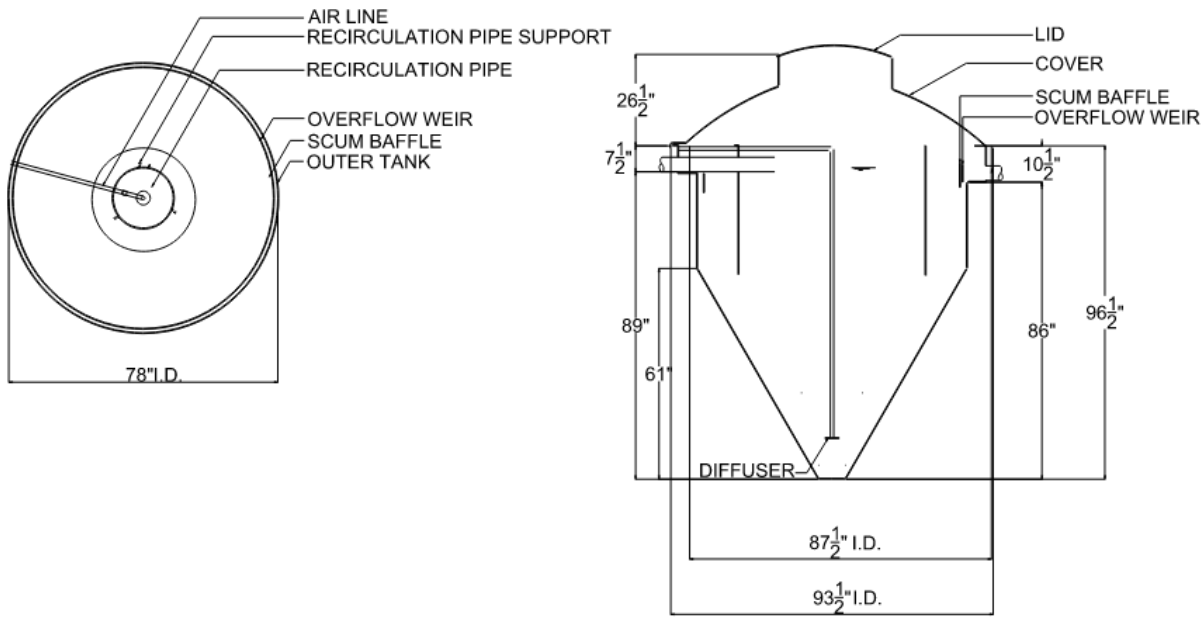

Figure 22. Nayadic M-1200A

The M-1200A model has a 1,200-gallon holding capacity and a 1,000-gallon treated capacity. The entire unit is about 96-inchs in diameter and 103-inches in height and weighs about 1,150 lbs. The unit will be connected to the existing septic tank which will be used as a pretreatment tank and improve performance of the unit. The unit will also be connected to the existing absorption field to provide disposal for the treated effluent. Because the unit will most likely be exposed to the high-water table, a ballast ring anchor should also be installed to hold the unit in place. See attachment X.

The local distributor for Nayadic, Aina Engineering, has provided a quote of **$4,700.00** for the Nayadic Model M-1200A system. Shipping cost for the unit and its components was quoted to be $9,270 for spot delivery to the project site. It should be noted that the shipping costs are only valid for 30 days and the quote was provided on May 21, 2020. See Attachment 7 for more information on the Nayadic Wastewater Treatment System and for the cost estimate.

UV disinfection is also available with the Nayadic system. Consolidated Treatment Systems recently launched their own UV disinfection units, Flow^2 that can be added to the Nayadic unit. Their UV disinfection systems reduce bacteria levels more than 99%. The local distributor has provided a quote of $980.00 for the Standard Model which would further treat the effluent out of the Nayadic unit.

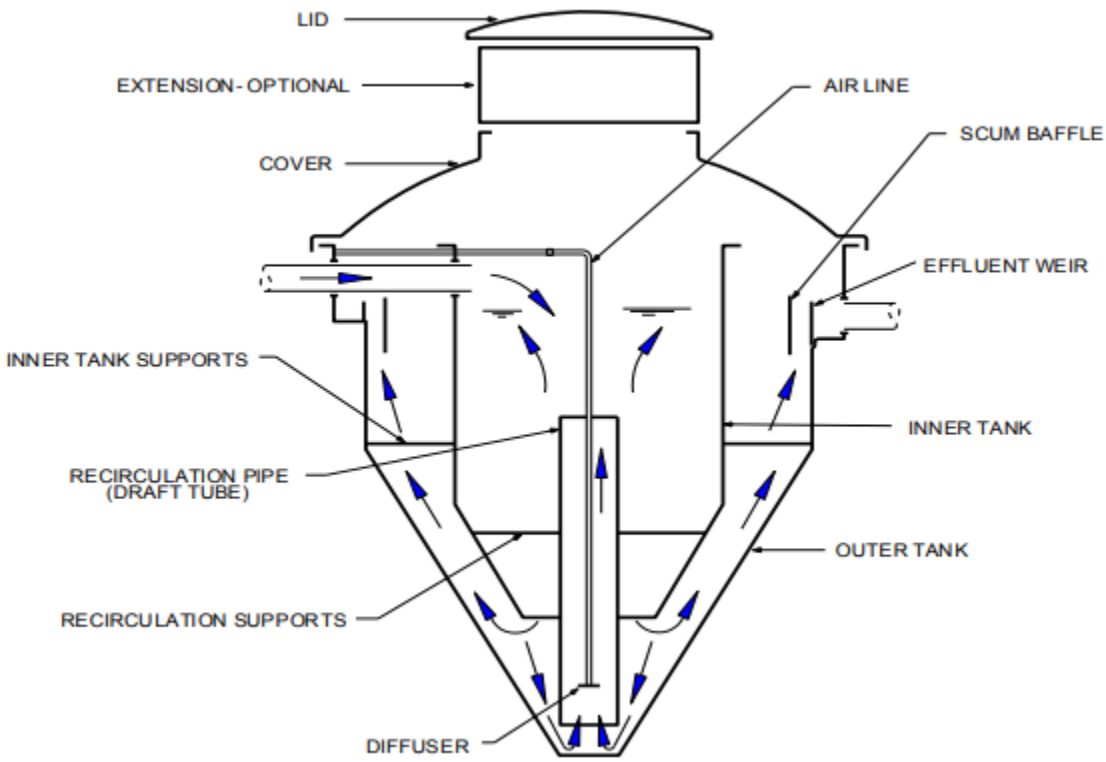

Figure 23. Typical Nayadic Tank Components

Conclusion:

Like the BioBarrier system, the Nayadic system would provide additional tank storage to the existing system while providing additional treatment through aerobic and UV treatment. This would not eliminate effluent discharge but will increase the quality of the discharge to mitigate negative effects to the surrounding waters.

The Nayadic Wastewater Treatment System is a feasible solution to provide adequate wastewater treatment due to its high quality of treatment, and automation provided that the necessary power supply can be provided to run the system. Benefits of the system include possible less excavation due to its unique conic shape and its low maintenance requirements.

DISCUSSION OF WASTEWATER SYSTEM OPTIONS

The different options presented in this report are summarized in Table 20 which includes the initial cost and pros and cons.

While the holding tank option would eliminate the potential for under treated effluent from being discharged into the surrounding environment by providing zero effluent discharge, it is unsustainable and cost prohibitive in the long run. Because the tanks would store all effluent from the comfort station, the tanks would need to be pumped on a weekly basis. A local pumping company provided a quote of $2,500 per week to pump the tanks using two 3,500-gallon capacity trucks. The location of MBP also increases pumping costs due to the time it takes to travel from either Hilo or Kona. With pumping every week, the yearly maintenance cost would be approximately $130,000 making the holding tank option infeasible.

While the Anua, BioBarrier, and Nayadic systems are more cost effective, it should be noted that the electrical power requirements are a major factor in feasibility since the site is currently powered by an off-grid system. Per the manufacturer, the Anua BioCoir system is capable of being designed to be powered by solar panels while implementing an off/on schedule that will allow for recharging. There is also the bypass line from the dosing tank to the absorption bed if the system is down. However, Anua does not have a significant presence locally which may pose a problem with repairs in the event of a major malfunction.

Both the BioBarrier HSMBR and Nayadic Systems have been installed locally with trained professionals available to perform maintenance and repairs. However, the major drawback for both systems is the power supply. Both manufacturers have not seen an installation with an off-grid power supply but had said their systems should be functional if enough power is supplied through solar panels or an alternate source. This would require further assessment to determine feasibility. Alternately, upgrading the site to be connected to a conventional power supply is also possible but costly.

The evaporative toilet and prefabricated restroom systems are also both feasible options but require a separate system to handle the gray water from sink facilities. The units would require construction/renovation of the comfort station for installation which comes with additional construction costs. The units itself also do not include sink facilities which would have to be separately provided and connected to its own disposal system (possible to use the existing IWS system for gray water).

Table 20 – Summary of Wastewater Systems for Miloli‘i Beach Park				
Option		**Cost**	**Pros**	**Cons**
1) Holding Systems	1A) Holding Tank	**$74,400.00** (*two* 5,000-gallon concrete holding tanks, includes shipping) **$50,096.13** (10,000-gallon fiberglass holding tan, includes deadmen, alarm package, and shipping) **$57,183.13** (*two* 5,000-gallon fiberglass holding tanks, includes deadmen, alarm package, and shipping	- Zero discharge into surrounding environment/waters	- High long-term costs due to regular (weekly) maintenance [Quote from BnB pumping: $2,500/week for two 3,500-gallon trucks = $130,000/year (52 weeks)] - Nuisance odors
	1B) Evaporative Toilet System	**$4,250.00** (per C-60 model toilet) **+$125** for each additional urinal (plus cost of shipping and installation)	- Zero discharge into surrounding environment/waters	- Contact with waste - Gray water system for sinks required unless they are omitted, and waterless hand cleaners used. County would be responsible for daily refilling/maintenance and possible anti-theft devices.
	1C) Prefabricated Waterless Restroom	**$60,000.00 per *one restroom*** (plus cost of shipping and installation) **$100,000.00 per *two restrooms*** (plus cost of shipping and installation)	- Zero discharge into surrounding environment/waters	- Gray water system for sinks required unless they are omitted, and waterless hand cleaners used. County would be responsible for daily refilling/maintenance and possible anti-theft devices.
2) IWS Treated Collection System	2A) Anua BioCoir Coconut Fiber Biofilter	**$35,029.84** (includes shipping)	- Possible to be powered by solar panels and put on an on/off schedule to charge per manufacturer.	- Requires electrical power supply - Backup generator required - Possible issues with repairs if major malfunction occurs since Anua does not have a big local presence.
	2B) BioBarrier HSMBR	**$127,800.00** (includes shipping and installation)	-Has been installed locally and trained inspectors for the system are available	- Requires electrical power supply, manufacturer unsure if possible to run off of an off-grid system - May require major electrical infrastructure upgrades - Backup generator required
	2C) Nayadic Wastewater Treatment System	**$15,654.44** (includes shipping)	-Has been installed locally and trained inspectors for the system are available	- Requires electrical power supply, manufacturer unsure if possible to run off of an off-grid system - May require major electrical infrastructure upgrades - Backup generator required

-- NOT FEASIBLE -- FEASIBLE WITH ADDITONAL GRAY WATER SYSTEM -- FEASIBLE WITH ELECTRICAL POWER

TREATED EFFLUENT DISPOSAL

All systems explored in the IWS Treated Collection System (Option 2) Section of this report produce treated effluent that needs to be disposed of per HAR 11-62. The standards state:

> *"Effluent from a septic tank shall be discharged into a soil absorption system, sand filter, subsurface irrigation system as approved by the director, or other treatment unit approved for use by the director" (HAR 11-62-33.1)*
>
> *"Effluent from an aerobic unit shall be discharged into a soil absorption system, sand filter, subsurface irrigation system as approved by the director, or other treatment unit or disposal system approved for use by the director." (HAR 11-62-33.1)*
>
> *"In areas below (makai of) the Underground Injection Control Line established pursuant to Chapter 11-23, where the vertical separation distance from the discharge to the seasonal high groundwater table is less than three feet, a new household aerobic unit may discharge its effluent into an elevated mound to achieve the vertical separation of drip irrigation system or, with a variance approved by the director and if the effluent is disinfected, to a seepage pit. Where water bearing formations are in danger of contamination, the director may require greater vertical separation." (HAR 11-62-33.1)*

The existing absorption bed can be connected to the new treatment system and serve as the effluent disposal system to satisfy the requirements by HAR 11-62.

It should also be noted that the HAR 11-62-33.1 requires a contract for inspections of the IWS systems every six months, including regular maintenance.

> *"Owners of proposed and existing household aerobic units shall have an active service contract for the proper maintenance of the aerobic unit and its disposal system with a certified operator or factory certified representative, and a copy of an active service contract shall be submitted annually to the department. The contract shall also include pumping service to maintain the household aerobic unit. For proposed household aerobic units, a copy of an executed service contract shall be submitted prior to the final approval of the individual wastewater system."*

CONCLUSION & RECOMMENDATIONS

Based off the findings from the water quality investigation and existing IWS condition assessment the following recommended options are:

Option 1
Keep the existing IWS. Based on the Water Quality Investigation it was found that while waters surrounding MBP are being negatively impacted by enterococcus, waters closest to the leach field had the lowest enterococcus measured. There were also no signs of effluent leaching from the dye test performed. Based on these findings, it appears that the existing IWS is sufficient for handling normal day-to-day flows. It is recommended that further investigation (e.g. during high usage periods) and increasing the frequency of pumping (e.g. from once every three months to once a month) be considered.

Option 2
Upsize the septic tank and leach field to handle the estimated weekend usage of about 100+ people. Provide a 3,125-gallon septic tank and 45 ft by 24.5 ft absorption bed. The estimated high usage population shall be verified for better sizing accuracy. Siting of the upsized septic tank and leach field will also need be considered based on the site constraints.

Option 3
If, by public demand, a decrease in bacterial output needs to be achieved, then install either a Holding System or IWS Treated Collection System option as discussed in the *Wastewater System Options* section of this report and summarized in Table 20. The County will select one of the options in conjunction with community input and budgetary consideration.

At this time, Option 1 is recommended based on the results of the Water Quality Investigation, dye test and the IWS capacity for normal day-to-day flows. Further investigation during high usage periods and increasing the frequency of pumping is also highly recommended. This will help determine if the existing IWS is functioning properly during high usage periods and determine an approximate high usage population.

REFERENCES

- Hawaii Administrative Rules Title 11, Department of Health Chapter 62 Wastewater Systems, dated March 21, 2016

ATTACHMENTS

Attachment 1 – As-Built Plans
Attachment 2 – Holding Tank
Attachment 3 – Evaporative Toilet System
Attachment 4 – Prefabricated Waterless Restroom
Attachment 5 – Anua BioCoir Coconut Fiber Biofilter
Attachment 6 – BioBarrier High Strength Membrane BioReactor (HSMBR)
Attachment 7 – Nayadic Wastewater Treatment System

ATTACHMENT 1

AS-BUILT PLANS

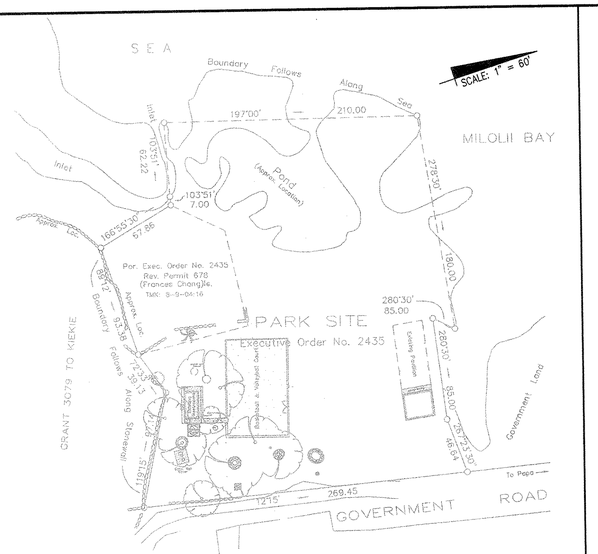

NOTES:

1. Metes & bounds from Executive Order No. 2435, PARK SITE, dated April 15, 1969.
2. Plot plan perimeter boundary and shoreline features are approximate. (Reference: CSF No. 15,783, dated Feb. 20, 1969).

PLOT PLAN
SCALE: 1" = 60'

LEGEND:

B	Bottom
BLDG	Building
BW	Bottom of Wall
COTG	Sewer Clean-out to Grade
Conc.	Concrete
CRM	Concrete Rubble Masonry
E/P	Electric Pole
EP	Edge of Pavement
INV.	Invert
S/P	Service Pole
T	Top
TBM	Temporary Bench Mark
T/P	Telephone Pole
TW	Top of Wall
U/P	Utility Pole
△	Control Point
	Utility Pole with Anchor
	TREE NAME/TYPE H = approx. height S = approx. spread C = approx. trunk circumference
22	Contour elevation
	Asphalt Concrete
	Concrete

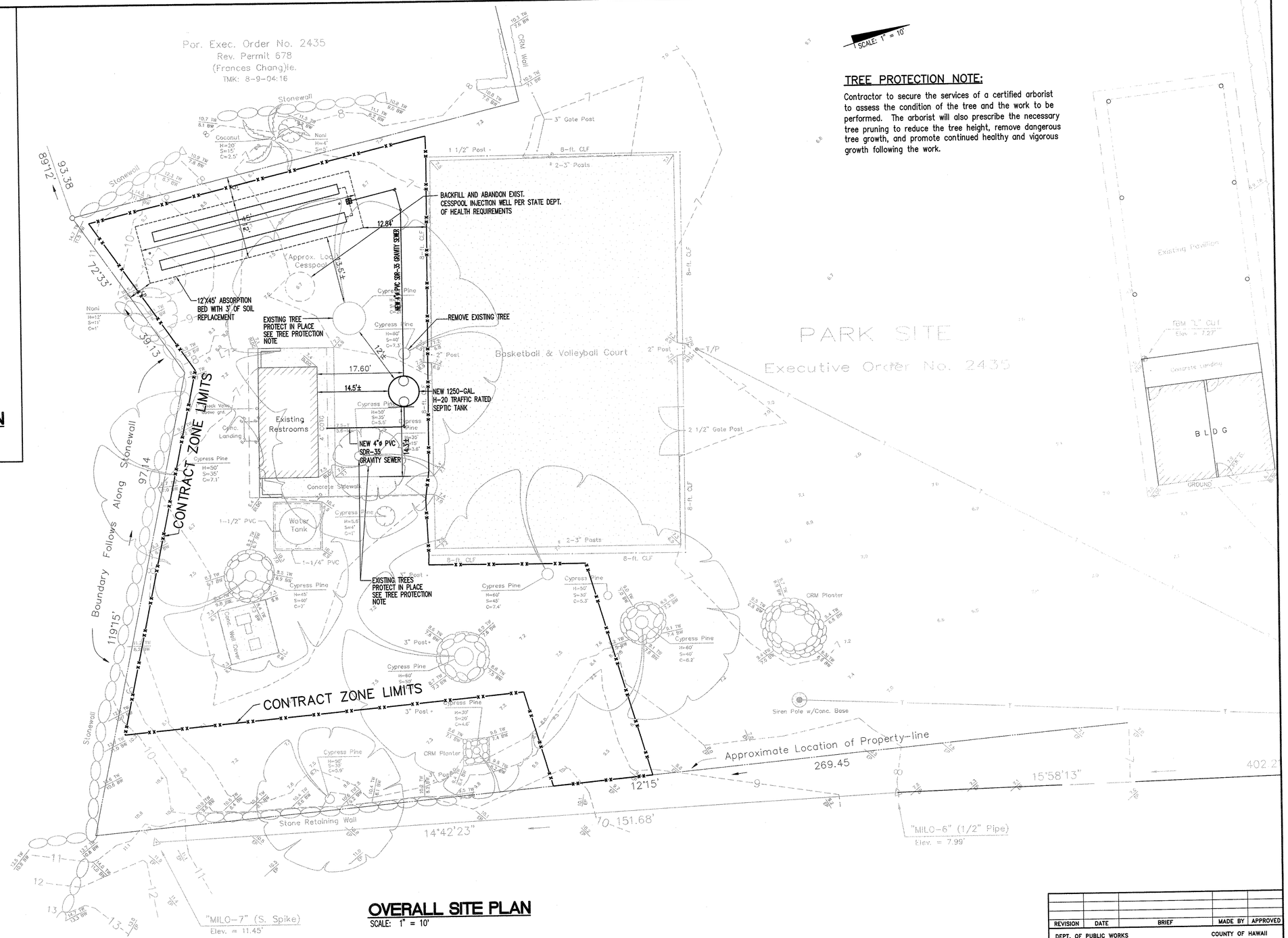

OVERALL SITE PLAN
SCALE: 1" = 10'

TREE PROTECTION NOTE:

Contractor to secure the services of a certified arborist to assess the condition of the tree and the work to be performed. The arborist will also prescribe the necessary tree pruning to reduce the tree height, remove dangerous tree growth, and promote continued healthy and vigorous growth following the work.

NOTES:

1. Origin of azimuth, coordinates and elevation referred to: "KAPUKAWAA" Triangulation Station (Source: State Survey Data).
2. Elevation at top of Triangulation Station "KAPUKAWAA" is 44-feet (approximate). (Source: State Survey Data).
3. "National Geodetic Survey Bench Mark elevation data not available for Milolii, and no data will be published for the Milolii area." (Source: Steve Lyles of NGS-Operational Analysis, 10/26/98)
4. Boundary points were not recovered; location of property lines are approximate.
5. Topographic Map delineates existing observable conditions as of September 29, 1998.
6. Contractor to verify location of existing cesspool.
7. The topographic survey was prepared by Inaba Engineering, dated Sept. 29, 1998 for County of Hawaii, Dept. of P & R

Revsed November 16, 2000-Additional Elev. of Pavilion

REVISION	DATE	BRIEF	MADE BY	APPROVED

DEPT. OF PUBLIC WORKS
DEPT. OF PARKS & RECREATION

COUNTY OF HAWAII
HILO, HAWAII

YEN WEN FANG
LICENSED PROFESSIONAL ENGINEER
No. 9361-C
HAWAII, U.S.A.

THIS WORK WAS PREPARED BY ME OR UNDER MY SUPERVISION, CONSTRUCTION OF THIS PROJECT WILL BE UNDER MY OBSERVATION.

SIGNATURE
12/08/05

MILOLII BEACH PARK IWS IMPROVEMENTS

MILOLII, SOUTH KONA, HAWAII

JOB NO. B-3663 T.M.K. 8-9-04: 01

OVERALL SITE PLAN

APPROVED BY:

DATE

DIVISION CHIEF

DESIGNED BY YWF
DRAWN BY BGC
CHECKED BY YWF
SURVEYED BY

SHEET NO. 26
C-23
OF SHTS.

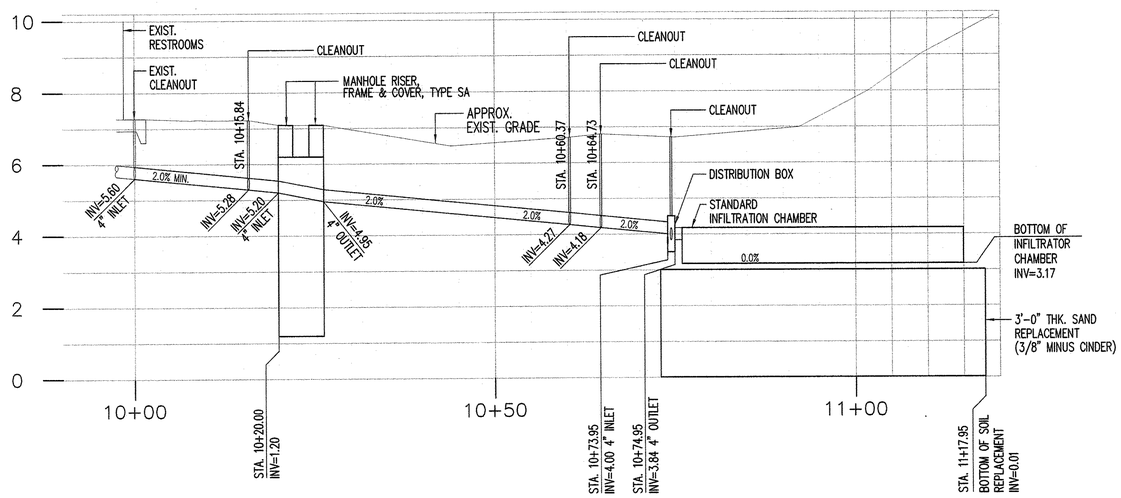

IWS PROFILE

VERT: 1' = 2'
HORIZ.: 1' = 10'

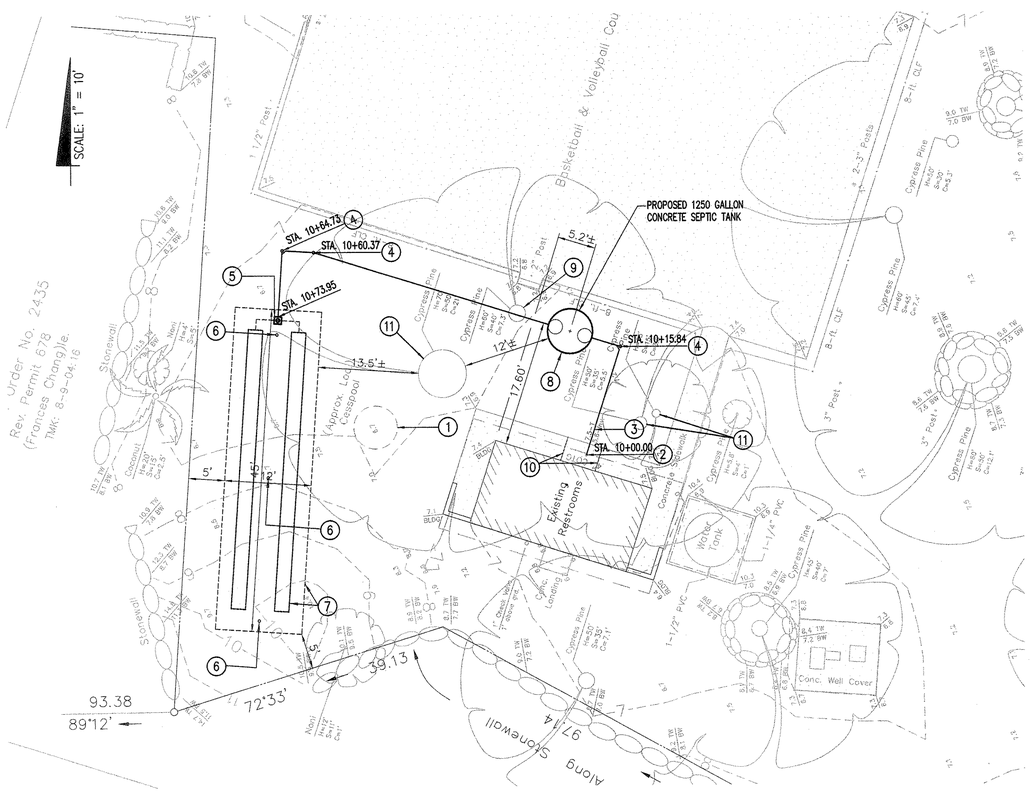

DETAIL SITE PLAN

SCALE: 1" = 10'

EXISTING WASTEWATER DISPOSAL SYSTEM ABANDONMENT NOTE:

ABANDONMENT OF EXISTING WASTEWATER DISPOSAL SYSTEM SHALL BE IN ACCORDANCE TO STATE DEPARTMENT OF HEALTH REGULATION, H.A.R. CHAPTER 11-62-23.1 (h) AND CHAPTER 11-23. ALL UNDERGROUND TREATMENT WORKS SHALL BE BACKFILLED AND COMPACTED WITH SAND, GRAVEL, OR CONCRETE OR SIMILAR NON-ORGANIC MATERIAL.

CONSTRUCTION NOTES

1. EXIST. CESSPOOL TO BE ABANDONED PER DETAIL. (3/C-25)
2. JOIN NEW 4"ø SEWER TO EXISTING CLEANOUT. FIELD VERIFY LOCATION & DEPTH.
3. CONSTRUCT 4"ø PVC SDR-35 GRAVITY SEWER.
4. CONSTRUCT CLEANOUT TO GRADE (6/C-25)
5. CONSTRUCT DISTRIBUTION BOX PER DETAIL. (4/C-25)
6. CONSTRUCT INSPECTION PIPE. (7/C-25)
7. CONSTRUCT SEEPAGE BED SIZE PER PLAN W/ 2 ROWS OF STANDARD INFILTRATOR CHAMBERS AND 3'-0" OF SOIL REPLACEMENT PER DET. (1/C-25) (2/C-25)
8. 1250-GALLON CONCRETE SEPTIC TANK, H-20 TRAFFIC RATED W/ (2)- MANHOLE RISERS WITH TYPE SA MANHOLE FRAMES & COVERS (5/C-25)
9. REMOVE EXISTING TREE.
10. SAWCUT, REMOVE AND REPLACE EXISTING SIDEWALK TO MATCH EXISTING.
11. EXISTING TREE, PROTECT IN PLACE; SEE TREE PROTECTION NOTE

REVISION	DATE	BRIEF	MADE BY	APPROVED

DEPT. OF PUBLIC WORKS
DEPT. OF PARKS & RECREATION

COUNTY OF HAWAII
HILO, HAWAII

MILOLII BEACH PARK IWS IMPROVEMENTS

MILOLII, SOUTH KONA, HAWAII

JOB NO. B-3663 T.M.K. 8-9-04: 01

PROFILE & PLAN

TEN WEN FANG
LICENSED PROFESSIONAL ENGINEER
No. 9361-C
HAWAII, U.S.A.

THIS WORK WAS PREPARED BY ME OR UNDER MY SUPERVISION, CONSTRUCTION OF THIS PROJECT WILL BE UNDER MY OBSERVATION.

SIGNATURE
12/08/05

APPROVED BY:

DATE

DIVISION CHIEF

DESIGNED BY YWF
DRAWN BY BGC
CHECKED BY YWF
SURVEYED BY
SHEET NO. 27
C-24
OF SHTS.

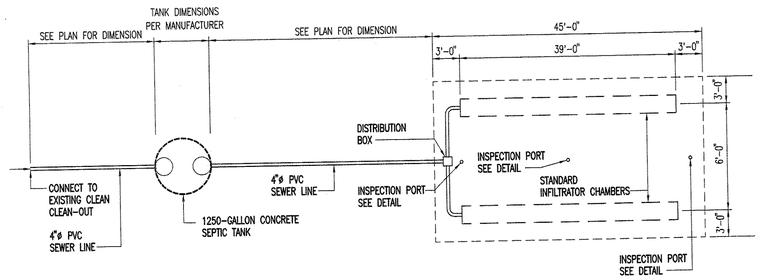

1 C-25 ABSORPTION BED LAYOUT

NOT TO SCALE

EXISTING WASTEWATER TREATMENT SYSTEM ABANDONMENT NOTE:

ABANDONMENT OF EXISTING WASTEWATER DISPOSAL SYSTEM SHALL BE IN ACCORDANCE TO STATE DEPARTMENT OF HEALTH REGULATION, H.A.R. CHAPTER 11-62-23.1 (h) AND CHAPTER 11-23.
ALL UNDERGROUND TREATMENT WORKS SHALL BE BACKFILLED AND COMPACTED WITH SAND, GRAVEL, OR CONCRETE OR SIMILAR NON-ORGANIC MATERIAL.
ALL ELECTRICAL COMPONENTS SHALL BE DISCONNECTED AT THE CIRCUITE BREAKER OR SOURCE AND ALL ACCESS OPENINGS SEALED.

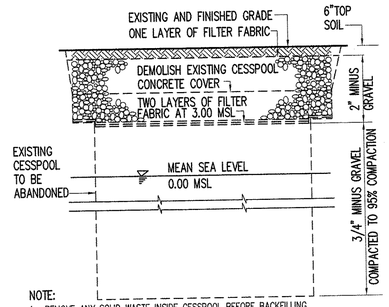

NOTE:
1. REMOVE ANY SOLID WASTE INSIDE CESSPOOL BEFORE BACKFILLING.
2. WHEN BACKFILLING BELOW WATER LEVEL, BACKFILL SLOWLY WITH SMALL QUANTITIES TO AVOID SPLASHING LIQUID ONTO THE GROUND SURFACE.
3. FILTER FABRIC SHALL BE NON-WOVEN FABRIC.
4. ABANDONING OF OTHER WASTEWATER TREATMENT / CONTAINMENT UNITS SHALL BE IN SIMILAR MANNER. REMOVE ALL ABOVE GROUND FEATURES TO AVOID TRIPPING HAZARD.
5. CONTRACTOR SHALL NOTIFY STATE D.O.H. 5 WORKING DAYS PRIOR TO BACKFILLING WORK. THE D.O.H. INSPECTOR SHALL BE ON SITE DURING THE BACKFILLING WORK. NO BACKFILL SHALL BE PLACED PRIOR TO THE ARRIVAL OF THE INSPECTOR.

3 C-25 CESSPOOL ABANDONING DETAIL

NOT TO SCALE

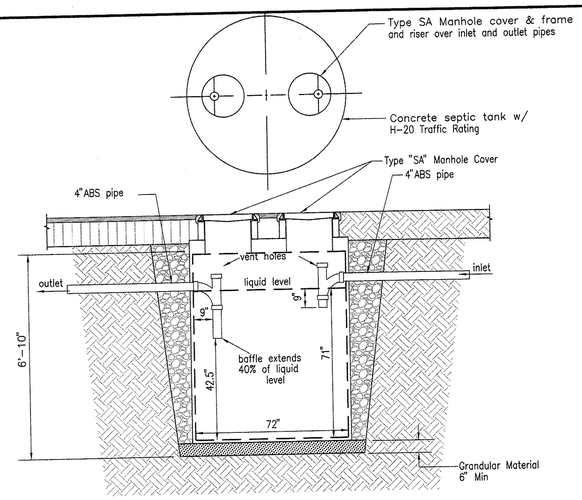

CONSTRUCTION NOTES
1. H-20 Traffic-Rated Ferrocement Septic Tank as provided by Peter Epperson of Pacific Gunite (P.O. Box 421, Mt. View, HI 96771. Phone (808) 968-6059) or approved equal. Size septic tank per plan.
2. Substitutions of other tanks are acceptable as long as minimum volume requirements are met and are approved by the Dept. of Health. Contractor shall submit drawing to engineer for approval.
3. Where not otherwise specified, the construction of the septic tank shall conform to Manual of Septic Tank Practice, U.S. Public Health Service, Publication No. 526.
4. Provide 6" of Granular Bedding Material (3/4" minus).
5. Backfill with native fill. No rocks shall exceed 4" diameter.
6. The Depths to the pipe inverts of the septic tank, distribution box, and absorbtion system are controlled bytopographic features and the invert of the building sewer which may impact the depths shown on the drawings.

5 C-25 H-20 TRAFFIC RATED SEPTIC TANK

NOT TO SCALE

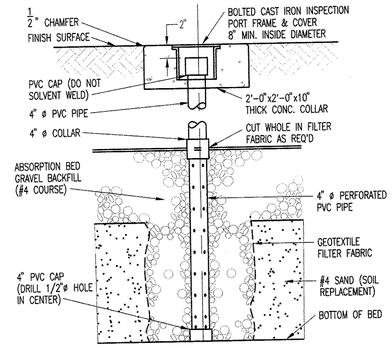

7 C-25 INSPECTION PIPE DETAIL

NOT TO SCALE

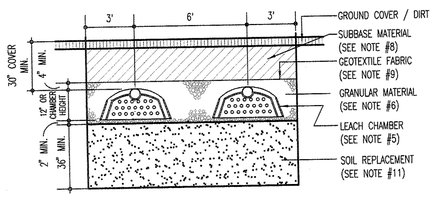

CONSTRUCTION NOTES:

1. MINIMUM OF TWO CHAMBER LINES AND MAXIMUM LENGTH OF EACH SINGULAR LEACH LINE SHALL BE 100'. SPACING BETWEEN TWO LEACH CHAMBERS SHALL BE 6' CENTER TO CENTER MAXIMUM, 4' CENTER TO CENTER MINIMUM.
2. THE BOTTOM OF THE BED AND LEACH CHAMBER SHALL BE LEVEL.
3. LEACH CHAMBER SHALL NOT BE GREATER THAN 3' NOR LESS THAN 18" FROM BED SIDE WALL.
4. WHERE NOT OTHERWISE SPECIFIED, THE CONSTRUCTION OF THE TRENCH SHALL CONFORM TO CHAPTER 62, WASTE WATER RULES AND REGULATIONS, SECTION 11-62-34, STATE OF HAWAII
5. LEACH CHAMBER SHALL BE STANDARD INFILTRATOR CHAMBER RATED FOR H-20 TRAFFIC LOADING, AS MANUFACTURED BY INFILTRATOR SYSTEM, INC.
6. GRANULAR MATERIAL SHALL BE DRAIN ROCK (GRAVEL OR CRUSHED STONE - WASHED - NOMINAL SIZE 3/4" - 1 1/2") AS PURCHASED FROM Y S ROCK - DIVISION OF YAMADA & SONS, INC. OR EQUIVALENT. CANNOT USE #3 ROAD BASECOURSE.
7. THE DEPTHS TO THE PIPE INVERTS OF THE SEPTIC TANK, DISTRIBUTION BOX , AND ABSORPTION SYSTEM ARE CONTROLLED BY TOPOGRAPHIC FEATURES AND THE INVERT OF THE BUILDING SEWER WHICH MAY IMPACT THE DEPTHS SHOWN ON THE DRAWINGS.
8. BACKFILL WITH SELECTED NATIVE SOIL. NO BACKFILL SHALL BE LARGER THAN 3" DIAMETER.
9. GEOTEXTILE FABRIC SHALL BE MADE FOR BURIAL, FINE ENOUGH TO STOP SILT AND ALLOW WATER TO PASS (AS SUPPLIED BY CENTRAL SUPPLY OR EQUIVALENT).
10. INSTALLATION OF LEACH CHAMBERS AND BACKFILL SHALL BE PERFORMED IN ACCORDANCE WITH THE MANUFACTURER'S SPECIFICATION.
11. SOIL HAVING A PERCOLATION RATE OF APPROXIMATELY ONE MINUTE PER INCH. SOIL REPLACEMENT SHALL BE 3/8" MINUS CINDER AS SUPPLIED BY BRYSON'S CINDER. PROOF OF QUANTITY AND ORIGIN MAY BE REQUIRED AT THE TIME OF INSPECTION BY RECEIPTS, HAULING TICKETS, ETC. SOIL REPLACEMENT SHALL BE COMPACTED TO 90% COMPACTION.
12. VERIFY ACTUAL HEIGHT OF INFILTRATOR CHAMBER W/ MANUFACTURER.

NOTE: CONTRACTOR SHALL NOTIFY ENGINEER OF UNUSUAL CONDITIONS FOUND DURING CONSTRUCTION THAT COULD IMPACT IWS FUNCTION SUCH AS LAVA TUBES, UNDERGROUND HOLES, WATER, EVIDENCE OF INTERMITTENT FLOWING WATER, ETC.....

2 C-25 ABSORPTION BED DETAIL AND CONSTRUCTION NOTES

NOT TO SCALE

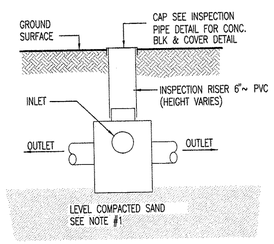

ELEVATION

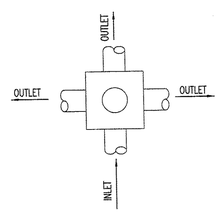

PLAN

CONSTRUCTION NOTE
1. THE DISTRIBUTION BOX SHALL BE SET LEVEL AND ARRANGED SO THAT EFFLUENT IS EVENLY DISTRIBUTED TO EACH DISTRIBUTION LINE.

4 C-25 DISTRIBUTION BOX DETAIL

NOT TO SCALE

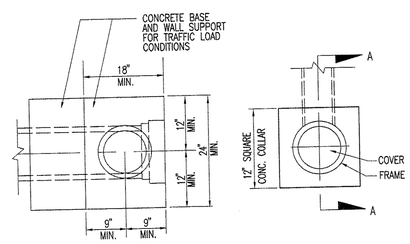

SECTION B-B

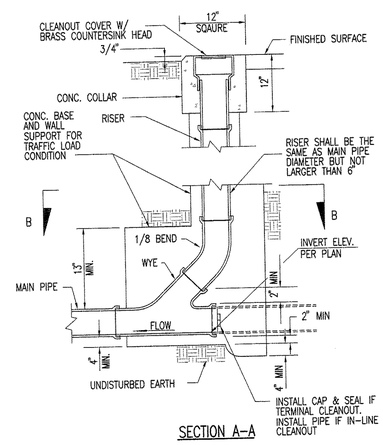

SECTION A-A

6 C-25 CLEANOUT TO GRADE (C.O.T.G.)

NOT TO SCALE

REVISION	DATE	BRIEF	MADE BY	APPROVED

DEPT. OF PUBLIC WORKS
DEPT. OF PARKS & RECREATION

COUNTY OF HAWAII
HILO, HAWAII

YEN WEN FANG
LICENSED PROFESSIONAL ENGINEER
No. 9361-C
HAWAII, U.S.A.

THIS WORK WAS PREPARED BY ME OR UNDER MY SUPERVISION, CONSTRUCTION OF THIS PROJECT WILL BE UNDER MY OBSERVATION.

SIGNATURE
12/08/05

MILOLII BEACH PARK IWS IMPROVEMENTS

MILOLII, SOUTH KONA, HAWAII

JOB NO. B-3663 T.M.K. 8-9-04: 01

DETAILS

APPROVED BY:

DATE

DIVISION CHIEF

DESIGNED BY YWF
DRAWN BY BGC
CHECKED BY YWF
SURVEYED BY

SHEET NO. 28

C-25

OF SHTS.

ATTACHMENT 2

HOLDING TANK

HJ4000 & HJ5000 GALLON HOLDING TANKS-HAWAII

TRAFFIC RATED

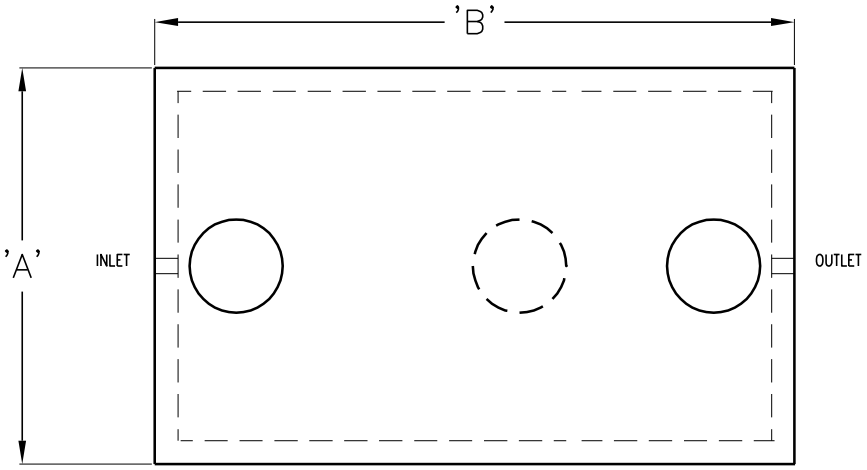

PLAN VIEW

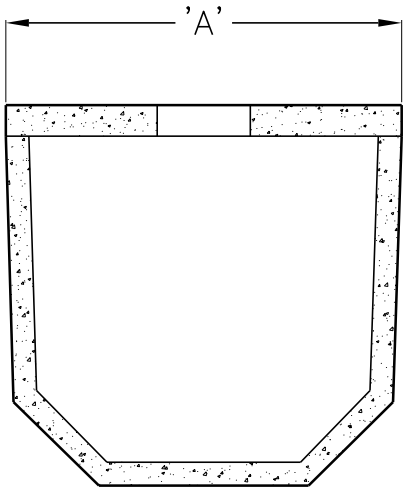

CROSS SECTION

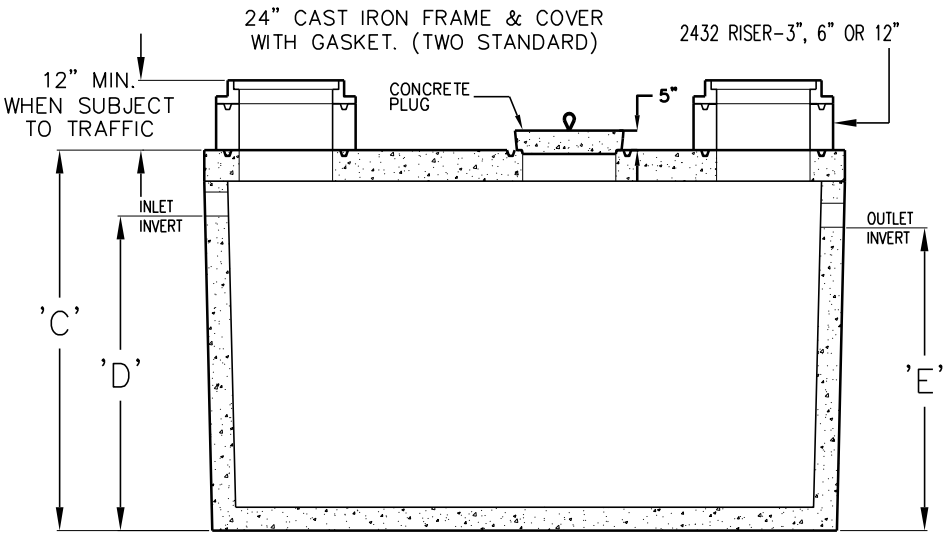

LONGITUDINAL SECTION

MODEL NUMBER	LIQUID CAPACITY GALLONS	WIDTH 'A'	OVERALL LENGTH 'B'	TANK HEIGHT 'C'	INLET 'D'	OUTLET 'E'	MINIMUM EXCAVATION WIDTH	MINIMUM EXCAVATION LENGTH	*DEPTH OF BURY	MAX. LIFT WEIGHT
HJ4000HT	4000	8'-6"	13'-9"	8'-2"	6'-8"	6'-5"	9'-6"	14'-9"	6' MAX.	33,100
HJ5000HT	5000	8'-6"	17'-6"	8'-2"	6'-8"	6'-5"	9'-6"	18'-6"	6' MAX.	36,700

- TANK DESIGNED FOR H-20 TRAFFIC WHEEL LOAD WITH 1' TO 6' MAX. EARTH COVER AND WATER TABLE AT ONE FOOT BELOW GRADE.
- SUITABLE NATIVE SOIL OR GRANULAR SUB-BASE SHALL BE COMPACTED AND LEVELED TO HANDLE ANTICIPATED LOADS. SEE INSTALLATION PROCEDURES SHEET FOR ADDITIONAL INFO.
- EXTERIOR AND INTERIOR CONCRETE SURFACES TO BE COATED WITH AN APPROVED BITUMINOUS MATERIAL.
- FOR COMPLETE DESIGN AND PRODUCT INFORMATION CONTACT JENSEN PRECAST.

THE DESIGN AND DETAIL OF THIS DRAWING ARE THE PROPERTY OF JENSEN PRECAST AND NOT TO BE USED EXCEPT IN CONNECTION WITH ITS OWN WORK. DESIGN AND INVENTION RIGHTS ARE RESERVED.

02-10-05
HJ4000-HJ5000-HT-H.dwg
© 2005 Jensen Precast

JENSEN PRECAST®

HAWAII DIVISION
91-110 HANUA STREET SUITE #202
KAPOLEI, HI 96707
PH: (808) 528-1175
Fax: (808) 528-1151

QUOTATION

Project Name:	**Milolii Beach Park**	**Quote Number:**	Q-00052030
Project Location:	Kawaihae, HI	**Quoted Date:**	5/07/2020
Customer Name:	Bow Engineering and Development, Inc.	**Quoted By:**	Andy Nakasone
Attn To	Kelsie Sasabe		
Phone:	(808) 941-8853		

ITEM	QTY	UOM	DESCRIPTION	PRICE EACH	EXT PRICE
1	2.00	Each	HJ5000 Holding Tank Kit includes: 1 - HJ4000 Holding Tank 2 - 32" O.D./24" I.D. 12" Grade Rings 2 - 24" Diameter Cast Iron Covers "Sanitary Sewer" 1 - Traffic Rated Plug Ship Code: **OTHERS - AS SPECIFIED**	$35,000.00	$70,000.00

DELIVERY	NET PRICE
Number of Trucks: 2.00	$4,400.00

Freight
Products coated on interior and exterior with Dehydratine 75, Bituminous damp proof coating.

This quotation is based on the information provided to us when the request for quotation was received in our office. Jensen Precast reserves the right to change our quotation should additional information be provided subsequent to the quotation date. Prices quoted are subject to change based on engineer approval.

Additional grade rings may be purchased separately (sizes 3", 6",& 12")

All items quoted exclude: any ladders/manhole rungs, core holes, pipe to manhole connectors, liners, coatings, sloped floors/flow channels, sump covers, epoxy coated rebar, and any items not explicitly called out or mentioned. Contractor responsible for verifying quantities/inverts/grading. Contractor responsible for adjusting frame/cover/grate elevations in field as necessary. Contractor responsible for all incidental material and labor

Order is F.O.B Young Brothers dock - Kawaihae, HI. Others responsible for delivery to jobsite and offloading/setting at jobsite.

G.E. tax (4.5% retail, 0.5% wholesale) not included. Tax to be added upon placement of order.

Price based on acceptance of Jensen Precast design. All estimated lead times begin after receiving submittal approval.

Jensen precast standard mix design (>5000PSI at 28 days) to be used in fabrication of all products.. Quote does not include any additives or deviations from our standard mix design.

All ITEMS TO BE MANUFACTURED IN A NPCA CERTIFIED PRODUCTION PLANT.

GRAND TOTAL: $74,400.00

Printed Date: 5/07/2020

HAWAII DIVISION
91-110 HANUA STREET SUITE #202
KAPOLEI, HI 96707
PH: (808) 528-1175
Fax: (808) 528-1151

Quote Number**:** Q-00052030 Quoted Date**: 5/07/2020**

Includes: 2.00 Special truck(s), Please allow minimum 72 hours from request for delivery to receipt of goods. This is in addition to the time required for manufacturing of the product, which will be determined upon receipt of purchase order. Delivery includes 1.00 hours of offload & set time per truck. If the material is loaded and subsequently cancelled by the customer, a minimum restocking fee of $300.00 will apply to each load.

ALL ORDERS ARE SUBJECT TO CREDIT APPROVAL AND ACCEPTANCE BY SELLER.
QUOTED PRICES DO NOT INCLUDE SALES TAX ON PRECAST ITEMS.
A 3% CREDIT CARD SERVICE FEE MAY BE ADDED FOR ALL CREDIT CARD PAYMENTS.
DELIVERY TRIPS, SETTING TIME, OR MATERIALS NOT NOTED ABOVE WILL BE BILLED ACCORDINGLY.
OFFER TO SELL SUBJECT TO JENSEN PRECAST'S COMPANY POLICIES, TERMS AND CONDITIONS.
PLEASE REFER TO https://www.jensenprecast.com/legal/Terms-And-Conditions-Honolulu.pdf FOR COMPLETE TERMS AND CONDITIONS WHICH ARE HEREBY INCORPORATED BY REFERENCE
ALL SPECIALIZED PRODUCT MAY BE SUBJECT TO A DEPOSIT PRIOR TO SUBMITTALS AND/OR PRODUCTION
QUOTATION IS VALID FOR 30 DAYS. THANK YOU FOR CHOOSING JENSEN PRECAST!

BY CUSTOMER

Andy Nakasone

BY JENSEN PRECAST

CUSTOMER PO

CONTACT INFORMATION
Email: anakasone@jensenprecast.com
Phone: +1 (808) 682-5901

Printed Date: 5/07/2020

XERXES®
CORPORATION
a subsidiary of ZCL Composites Inc.

Fiberglass Underground Wastewater Tanks

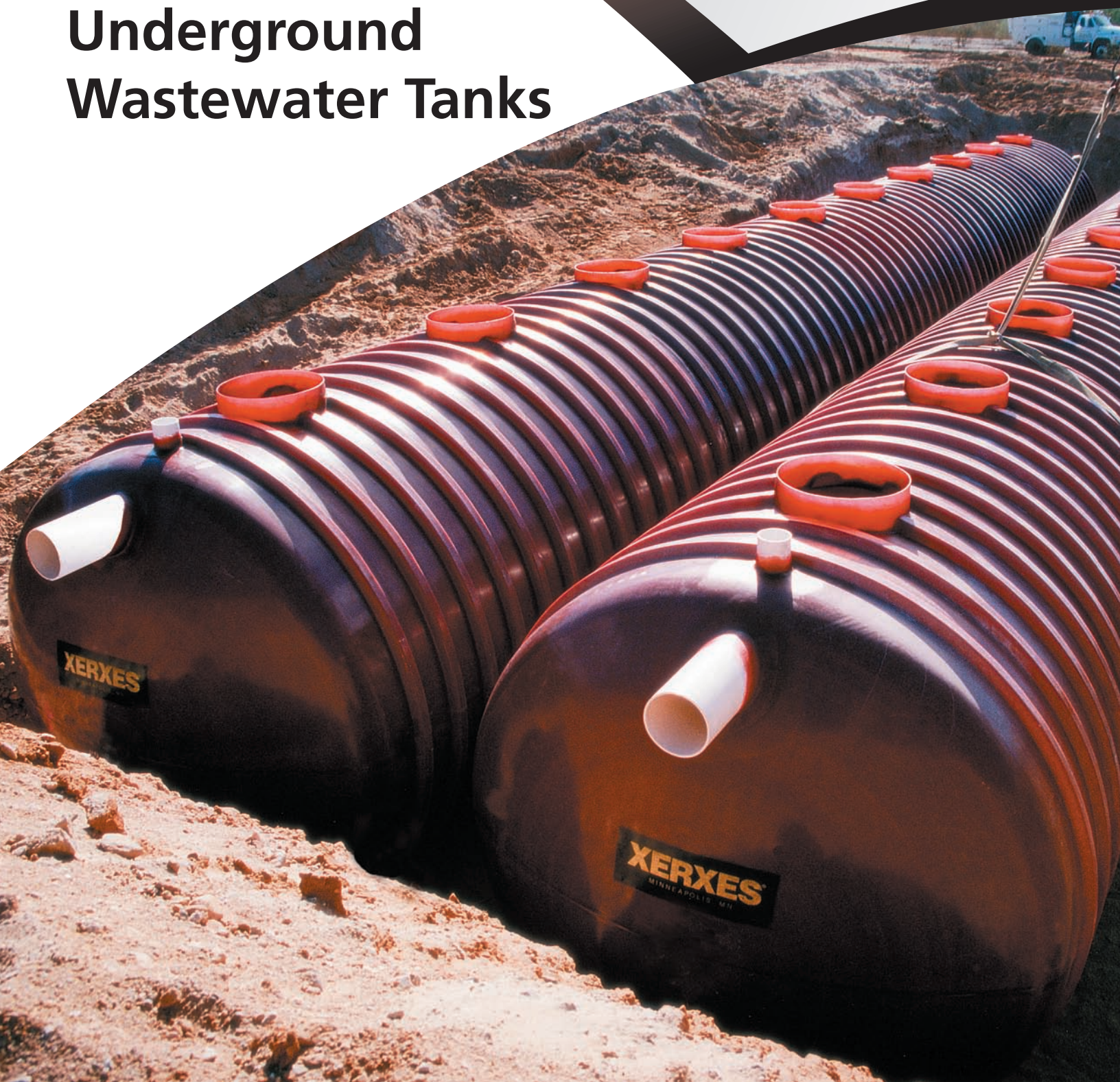

Xerxes Fiberglass Wastewater Tanks

Fiberglass Tanks for Long-Term Storage of Wastewater

As communities, businesses and industries become increasingly accountable to meet environmental requirements for liquids that require safe, design-proven storage, Xerxes is in the forefront with innovative answers. When considering the options in customized systems to process and store wastewater, facility designers and owners look for a long-term, structurally strong, watertight and cost-effective option. That is exactly what the Xerxes fiberglass tank is.

For decades, Xerxes has been well-known as a major tank supplier to the petroleum industry, with more than 150,000 tanks installed. Many of the world's largest oil companies rely on Xerxes to supply environmentally safe underground tanks for storage of gasoline at their retail service stations. Throughout the neighborhoods and communities of America, Xerxes underground tanks are in place, simultaneously storing products and protecting the environment.

Today Xerxes is taking its place in those same neighborhoods and communities as a major supplier of storage tanks for wastewater applications — including septic, recirculation, dosing and holding tanks — as well as other liquids, such as leachate, chemicals, potable water, fire-protection water, irrigation water, gray water, rain water, stormwater and emergency-supply water. Each time a Xerxes fiberglass underground tank is delivered to a customer, the same performance standard has been met — a vessel for safe underground storage of liquid and careful protection of the environment.

Tanks Designed & Manufactured by a Long-Time Industry Leader

Xerxes is a leader in the design and manufacture of high-quality, cost-effective products that help protect the fragile relationship between humans and their environment. Each Xerxes wastewater tank represents decades of innovation and proven experience developing and fabricating fiberglass storage tanks for underground storage of liquids.

At Xerxes, excellence in service is as highly valued as excellence in product design and manufacturing. Xerxes' four strategically located manufacturing facilities in the United States provide customers with prompt, economical delivery and quality service. That gives Xerxes tanks one more advantage — they are readily available to customers throughout the country.

Watertight Tanks Featuring the Many Benefits of Fiberglass

A fiberglass wastewater tank, by virtue of its materials and design, is inherently the superior choice for safe, long-term storage and treatment of wastewater for a wide range of applications. The best storage system for wastewater is structurally strong, corrosion-resistant, watertight, easily installed and cost-effective. All these elements come together in the design and manufacture of a Xerxes fiberglass wastewater tank.

Xerxes uses only high-quality resin and glass in the manufacture of its fiberglass tanks. For added structural strength, Xerxes tanks are designed with integral ribs. Because the integral ribs and tank are made of the same materials and are manufactured simultaneously, the Xerxes tank is a very robust tank. It is designed to accommodate heavy traffic loads and high water-table conditions when properly installed. Fiberglass tanks available from smaller fabricators may also utilize ribs, but they may not be designed for traffic environments and do not have the same robust design features of a Xerxes tank. While concrete tanks are widely viewed as structurally strong, many are not designed for the heavy loading conditions that vehicle traffic and groundwater can present.

Since water by nature can create a corrosive environment, rust can be a major weakness in some underground wastewater storage systems. The materials used to construct Xerxes fiberglass tanks are inherently rustproof and corrosion-resistant. Concrete tanks, whether precast or poured-in-place, are susceptible to rust if the steel reinforcement is exposed through cracks in the concrete. Exposure to hydrogen sulfide gases, present in wastewater tanks, can also cause corrosion damage to a concrete tank and steel reinforcement, thereby limiting the tank's useful life. Since wastewater tanks can be exposed to highly corrosive conditions, selecting a Xerxes wastewater tank gives system owners and designers the assurance that rust or corrosion will not cause a leak or structural failure.

Aside from being rustproof and corrosion-resistant, a Xerxes tank is also designed to be watertight. Easily equipped for on-site pressure testing before or after installation, Xerxes wastewater tanks give owners the confidence that the tank is watertight from the day it is installed. This feature is of growing importance with today's stringent regulations, many requiring watertight systems. For more than 28 years Xerxes has been manufacturing thousands of underground tanks for use in the petroleum industry, where a zero leak rate is the accepted industry standard. These fuel tanks must be leak-free, not only upon installation, but for decades, verified by periodic, precision-testing practices that are routine for gasoline tanks.

Leaking concrete tanks are one of the reasons that Xerxes tanks have become such a popular choice for wastewater applications. Concrete, by its nature, is vulnerable to cracking. In most cases, precast concrete tanks rely on sealants or adhesives to seal the seams designed into the tank. When the ground around the tank shifts or settles, or when the tank is improperly installed, these seams are susceptible to leaking, causing either groundwater contamination or groundwater infiltrating into the tank, requiring the system to processes groundwater along with septage. A structurally strong, watertight fiberglass tank eliminates both of these problems.

Quality manufacturing is key to producing a strong, watertight tank. When it comes to the environment, Xerxes knows that too much is at stake to manufacture anything less than a superior underground storage tank. Xerxes maintains high standards of quality in the manufacture of each tank. The quality control steps are applied in a tightly controlled manufacturing environment. On the other hand, the same level of quality control may not be maintained in situations where tanks are assembled, in part or in whole, in the field and where weather conditions may not allow careful quality control procedures.

Features of Xerxes Wastewater Tanks

- Constructed of rustproof, long-lasting fiberglass
- Manufactured to meet customers' functional requirements
- Designed with integral ribs for added strength
- Designed for H-20 load conditions
- Easy to ship and install
- Can be purchased with accessories that allow for both pre-installation or post-installation pressure testing
- Manufactured to applicable requirements of Underwriters Laboratories (UL) 1316 and ANSI/AWWA D120
- Able to be reinstalled after recertification by Xerxes
- Available in single-wall, double-wall and triple-wall models
- Available in sizes from 600 gallons to sizes in excess of 60,000 gallons

The Design of Xerxes Wastewater Tanks Offers Many Advantages

Many advantages of a Xerxes wastewater tank come from the geometry of the tank itself. The Xerxes tank has a cylindrical shape and is domed at both ends, which offers major benefits in terms of both operation and maintenance. The shape of a Xerxes tank maximizes the natural flow of liquids through a vessel, allowing for the smooth flow of liquids through the tank and maximum use of the tank's interior.

A domed, cylindrical tank minimizes pockets or "dead" spots in which scum or sludge can accumulate. The smooth, rounded surfaces of the tank's interior provide a significant advantage when pumping out scum and sludge. Tanks designed with squared corners and sharp angles can have pockets and "dead" spots, creating two major disadvantages — diminished volume and spaces in which scum and sludge settle.

When a Xerxes wastewater tank is delivered to an installation site, all it needs to be ready for operation is connection of the piping and installation of the risers, which allow for easy access to the tank for maintenance and cleaning from above grade. Septic systems manufactured of other materials may be delivered in multiple pieces and require field assembly. That not only makes installation more difficult and time-consuming, it also increases the possibility of leakage once the system is in operation. The installation and proper curing of cast-in-place tanks can be very time-consuming, taking days or weeks, as opposed to the one-day installation typical for a Xerxes fiberglass tank.

Xerxes tanks fit a variety of wastewater applications. They can be used as septic tanks, recirculation tanks, dosing tanks, pump tanks, holding tanks and tanks using prepackaged treatment systems. (Some typical applications are shown in these pages.) Xerxes tanks can be manufactured in sizes from 600 gallons to in excess of 60,000 gallons, with multiple compartments, and in single-wall, double-wall and triple-wall models. Whatever the application and whatever the size, each Xerxes fiberglass wastewater tank offers the same benefits: It is watertight, rustproof, corrosion-resistant and lightweight. A Xerxes tank is easy to install, easy to operate and easy to maintain.

All in all, from delivery to operation, Xerxes offers customers a superior option for all their wastewater tank needs.

Typical Wastewater Applications

- Housing developments
- Municipalities
- Public parks
- Rural developments
- Sanitary stations
- Rest areas and truck stops
- Private RV parks
- Resorts
- Schools and recreation centers
- Business parks

Dual-Compartment Septic Tank Applications

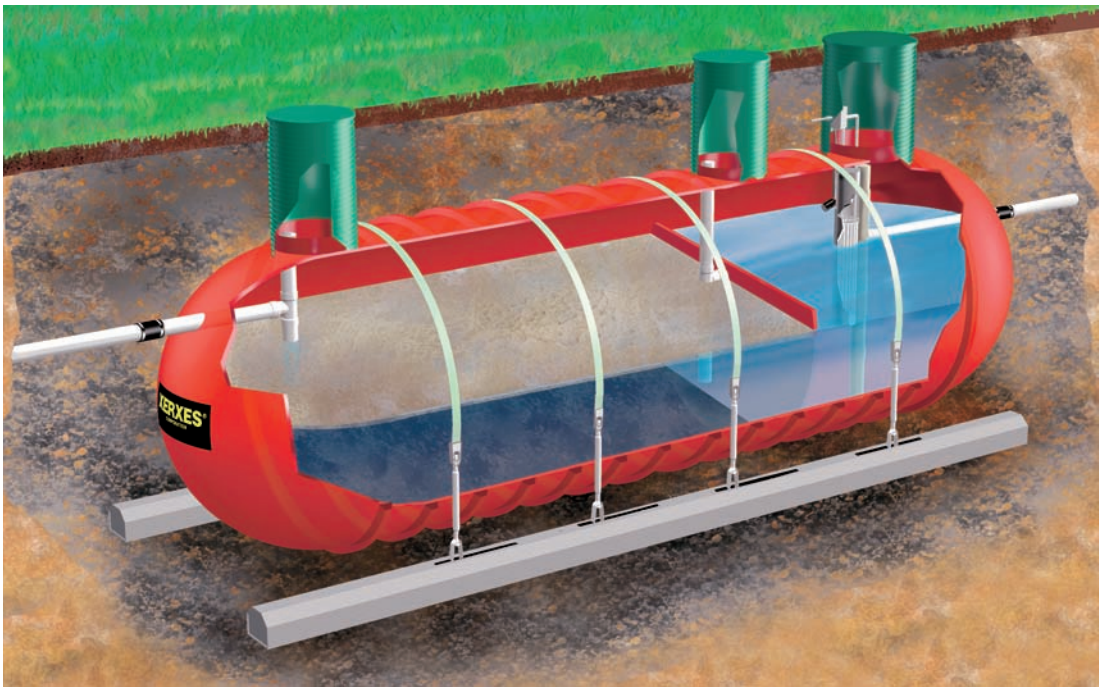

When an application calls for more than one compartment in a primary treatment system, Xerxes offers a dual-compartment fiberglass tank, which has two compartments with a baffle between them to control the waste stream. Xerxes also offers wastewater tanks with more than two compartments.

When an application requires more than one compartment, other systems may use a number of separate tanks, which increases the possibility of failed connections. This is an example of a definite advantage that customers have with Xerxes dual-compartment septic tanks. Compartment sizes can be configured in a variety of arrangements to meet design requirements. Recent Xerxes installations of dual-compartment septic tanks are residential septic systems in the desert, and septic systems in small business parks and schools.

Large Commercial Septic Tank Applications

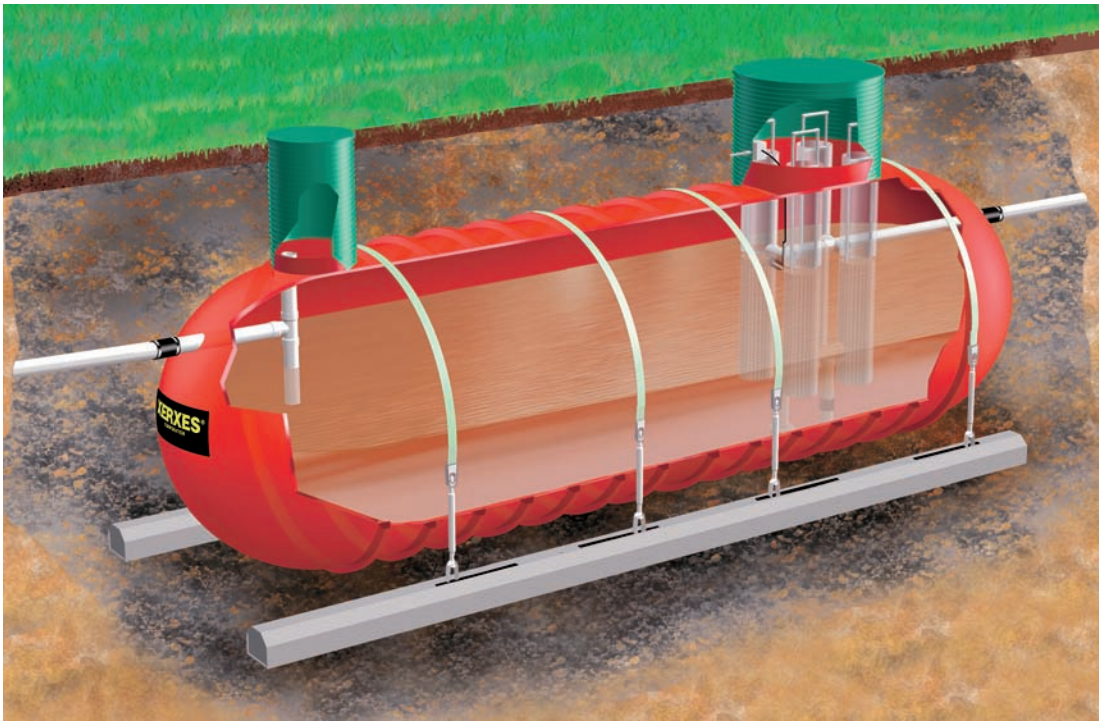

When a customer needs a large commercial septic system, a Xerxes tank can serve as the sole tank in a septic system or as the second tank in a two-tank septic system. This Xerxes tank has a major advantage over build-in-place or multiple-tank systems, which typically require several smaller tanks to create a large system. Xerxes access-opening designs can also accommodate multiple pump chambers that are often necessary in large commercial-size tanks.

The Xerxes large commercial septic tank is a good fit for hotels and resorts where open green space is limited. Since Xerxes tanks are designed for H-20 load conditions, they can be installed under parking space. Recent installations of this type of Xerxes tank include a 150,000-gallon/day treatment system for a resort community in the mountains and a 40,000-gallon/day treatment system for a conference center in the Midwest.

Recirculation Tank Applications

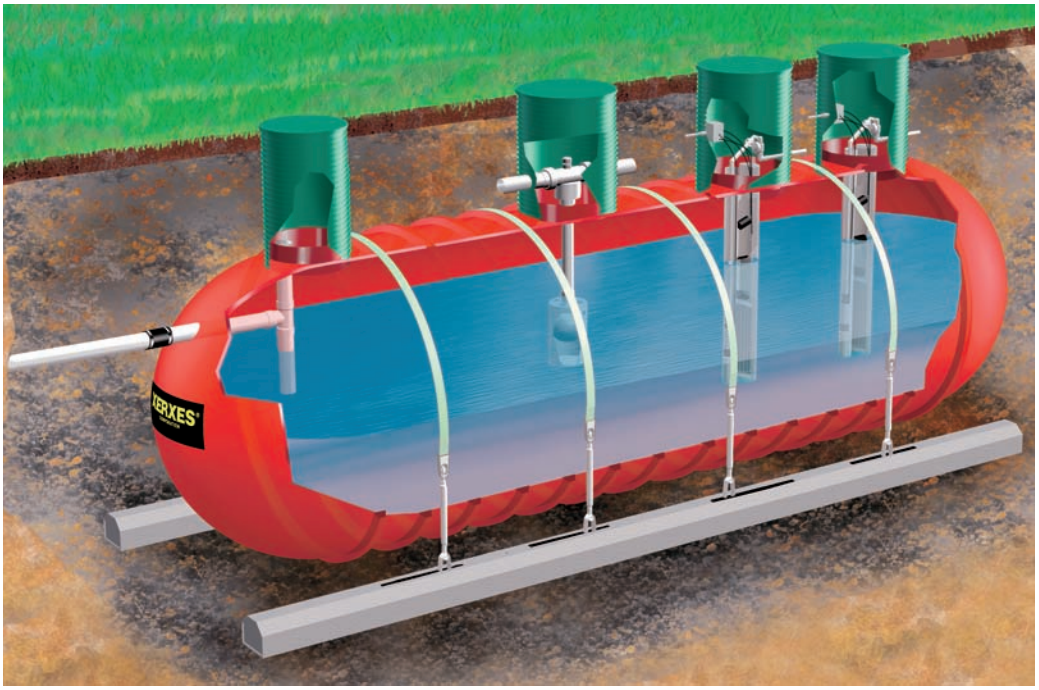

One way of treating the waste stream is by recirculating the effluent through a filter (gravel, sand or peat, for instance). The common denominator in such secondary treatment systems is a recirculation tank. A Xerxes wastewater tank can be used in any system that requires recirculation of the waste stream.

Whether a wastewater customer is installing a new system or is retrofitting an existing system, a Xerxes recirculation tank, in which all waste liquids can be stored in one tank, is a superior option. Installing a Xerxes recirculation tank can eliminate the need to install a whole new septic system. Recirculation tanks can be designed and manufactured to fit specific requirements for splitter valves and pumping equipment. Whether the system has a hanging pump chamber or a submerged pump mounted on a pump platform, Xerxes can provide a recirculation tank and accessories to fit a customer's specific requirements. If an application requires use of the entire tank capacity, Xerxes also manufactures bottom sumps to meet this requirement. A typical example of a Xerxes recirculation tank application is a recently installed 10-foot-diameter, 30,000-gallon recirculation tank at a trailer park that previously had a concrete septic system that needed upgrading because of new regulations pertaining to existing secondary treatment systems.

Dosing Tank Applications

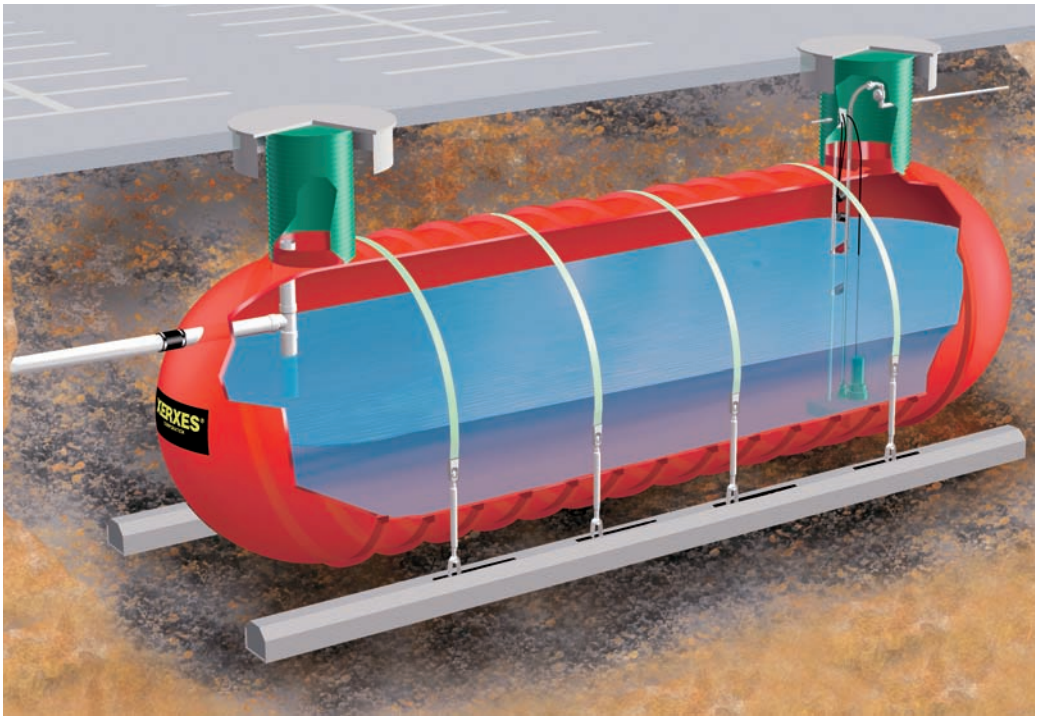

Certain wastewater systems require a dosing tank. A Xerxes dosing tank is designed to receive the wastewater from a septic tank at two points in the process — after primary treatment and/or after secondary treatment — and then dispense of the effluent for final dispersal and/or disinfection.

A Xerxes fiberglass dosing tank allows for the storage of surge capacity in the system and periodic dispersal of doses of effluent into the drain field in one of two ways — either electrically with a pump or mechanically with a siphon. Each Xerxes tank is manufactured with the same structural integrity designed to handle the pressures of continuous filling and emptying of the tank at specified burial depths. A watertight, corrosion-resistant Xerxes fiberglass tank is an excellent choice as a dosing tank in a wastewater system.

Prepackaged Treatment System Applications

Many wastewater projects today are designed with an engineered prepackaged treatment system. These systems have a variety of designs, but all require a watertight, structurally strong, corrosion-resistant storage vessel. Xerxes offers all the options in tank design needed to accommodate most treatment systems. Whether the engineered system is a sequenced batch reactor (SBR), aerobic treatment unit (ATU), membrane bio-reactor (MBR) or other technology, Xerxes offers a range of advantages and flexible design options. One of these advantages is providing the customer with a product assembled in the plant and shipped to the project site as a complete system.

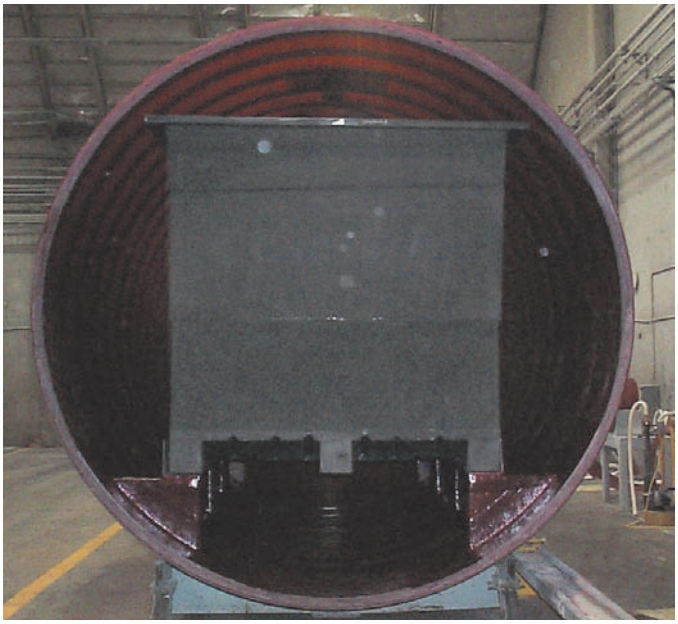

Xerxes installation of treatment components in the plant reduces or eliminates the requirement for tank entry in the field, thereby saving considerable installation time and expense. A confined space entry can be a costly step for the installer of the system. Also, because Xerxes assembles these components in a factory-controlled environment, the customer can receive a higher-quality finished product than with the many variables created by field assembly and installation. Additionally, the use of Xerxes tanks for collection and disposal along with Xerxes tanks for treatment provides the designer and/or owner with an entire system that is watertight and corrosion-resistant. In recent years, Xerxes has worked closely with many system suppliers to provide unique tank solutions for engineered prepackaged systems going to national park sites, housing developments, manufacturing facilities and schools.

Other Wastewater Tank Applications

Lightweight, watertight and corrosion-resistant fiberglass tanks are ideally suited to a variety of wastewater projects, whether they are in a rural community, a remote location or the middle of a city. Each Xerxes wastewater tank is designed and manufactured to meet a customer's specific requirements. Today, many Xerxes tanks are finding their way into neighborhoods as septic tanks for single-family homes. (See photo above.)

Additional examples of recent Xerxes wastewater tank installations are: 1) a wastewater holding system for an amphitheater in Washington state; 2) a recirculating, sand-filter wastewater treatment system for a Minnesota housing development; 3) surge tanks, settling tanks and lift station/pump tanks for a city sewer system in Missouri; and 4) 62,000-gallon tanks for a wastewater treatment system for a desert housing development in Arizona.

Optional Tank Accessories to Fit a Variety of Wastewater Applications

One of the ways Xerxes continues to meet the changing needs of the marketplace is to meet the functional requirements of system designers and owners. When it comes to the wastewater market, Xerxes has developed a line of accessories to complement the full range of its wastewater tanks. Shown here are just a few of these accessories, including access openings, piping connections, baffles/partition walls, sumps, risers and deadmen.

Access Openings

Xerxes offers a variety of fiberglass access openings for wastewater tanks. The access openings serve a variety of purposes, including as inspection openings and as openings for effluent filters (vaults). They are available in a range of sizes, from 24 inches to 48 inches in diameter and can include internal flanges to support pump vaults.

Internal Baffles/Partition Walls

Xerxes' internal baffles and partition walls can improve treatment performance in wastewater tanks by maximizing the retention time of waste. These fiberglass accessories are designed and manufactured with the appropriate penetrations to fit the needs of specific applications.

Piping Connections

Depending on the application, wastewater tanks require a variety of accessories for piping connections. Xerxes offers, in either PVC or FRP, inlet and outlet piping, and influent or effluent sanitary tees. These connections are manufactured to the size required for each application.

Pump Platforms

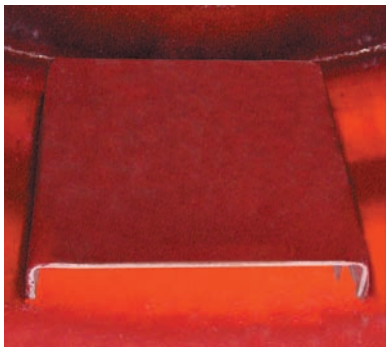

Depending on the type of system design, a Xerxes wastewater tank may require a submerged pump. Among the accessories Xerxes offers are pump platforms designed to support submerged pumps located in the bottom of the tank.

Other wastewater tank accessories

To fit a variety of wastewater applications, Xerxes provides a wide range of accessories. These include access risers (photo to right), large-diameter bottom sumps (photo below), reinforced-concrete deadmen, fiberglass hold-down straps and fiberglass or aluminum ladders.

Single-Wall Tank Data

Nominal Capacity (gallons)	Actual Capacity (gallons)	Nominal Tank Length	Nominal Shipping Weight (pounds)	Number of Hold-Down Straps Required
4-Foot-Diameter Tanks				
600	602	6′-11 7/8″	500	2
1,000	1,009	11′-3 7/8″	700	2
1,500	1,449	16′-0″	1,000	2
6-Foot-Diameter Tanks				
1,500	1,779	10′-7 1/4″	800	2
2,000	2,376	13′-5 3/4″	1,000	2
3,000	2,973	16′-4 1/4″	1,200	2
4,000	4,131	21′-11 1/8″	1,600	2
5,000	5,064	26′-5″	1,900	4
6,000	5,960	30′-8 3/4″	2,200	4
8-Foot-Diameter Tanks				
2,000	2,189	9′-1/2″	900	2
3,000	3,271	12′-3″	1,200	2
4,000	4,218	15′-1/2″	1,400	2
5,000	5,165	17′-8 1/2″	1,700	2
6,000	6,084	20′-6 1/2″	2,000	2
7,000	6,946	23′-1″	2,200	4
8,000	7,950	26′-1/2″	2,500	4
9,000	8,869	28′-9″	2,700	4
10,000	9,816	31′-6 1/2″	3,000	4
11,000	10,763	34′-4″	3,200	4
12,000	11,682	37′-1/2″	3,500	4
13,000	13,081	41′-2″	4,000	6
14,000	14,028	43′-11 1/2″	4,200	6
15,000	14,975	46′-9″	4,500	6
10-Foot-Diameter Tanks				
10,000	10,563	21′-5 1/4″	3,200	4
11,000	11,364	22′-9 3/4″	3,400	4
12,000	12,068	24′-1/4″	3,600	4
13,000	12,966	25′-6 3/4″	3,800	4
14,000	13,767	26′-11 1/4″	4,000	4
15,000	15,248	29′-5 3/4″	4,500	4
20,000	20,055	37′-8 3/4″	5,700	6
22,000	22,580	42′-3/4″	6,600	8
25,000	25,783	47′-6 3/4″	7,900	8
30,000	30,590	55′-9 3/4″	9,400	10
35,000	35,397	64′-3/4″	10,500	12
40,000	41,004	73′-8 1/4″	12,100	14
12-Foot-Diameter Tanks				
20,000	20,781	29′-4″	9,200	6
25,000	25,541	35′-7″	10,600	8
30,000	31,253	43′-1″	12,500	10
35,000	36,013	49′-4″	13,900	12
40,000	39,821	54′-4″	15,000	12
48,000	48,389	65′-7″	17,700	18
50,000	50,293	68′-1″	18,300	18

Guide Specifications – Single-Wall FRP Tanks for Septic Use

Short Form:

The contractor shall provide a single-wall fiberglass reinforced plastic (FRP) underground storage tank as shown on the drawings. Sizes and fittings shall be as shown. The tank shall be a fiberglass tank as manufactured by Xerxes Corporation.

Tank shall be tested and installed according to the Xerxes Installation Manual and Operating Guidelines in effect at time of installation.

Long Form:

Part I: General

1.01 Quality Assurance

A. Acceptable Manufacturer: Xerxes Corporation

B. Governing Standards, as applicable:

1. Tank manufacturer shall be in the business of manufacturing tanks to Underwriters Laboratories, Inc. (UL) Standard 1316.
2. Tank manufacturer shall be in the business of manufacturing tanks conforming to the requirements of ANSI/AWWA D120 Thermosetting Fiberglass-Reinforced Plastic Tanks.

Part II: Products

2.01 Single-Wall Fiberglass Reinforced Plastic (FRP) Underground Storage Tanks:

A. Loading Conditions — Standard tank design shall meet the following criteria:

1. Internal Load — Tank shall be designed to withstand a 5-psig air-pressure test (3 psig for a 12'-diameter tank) with a 5:1 safety factor. When tank is designed for on-site testing, contractor shall individually test tank for leakage prior to installation. Maximum test pressure is 5 psig (3 psig for a 12'-diameter tank).
2. Surface Loads — Tank shall withstand surface H-20 axle loads when properly installed according to tank manufacturer's current Installation Manual and Operating Guidelines.
3. External Hydrostatic Pressure — Tank shall be capable of being buried in ground with 7' of overburden over the top of the tank, the hole fully flooded and a safety factor of 5:1 against general buckling.
4. Tank shall support accessory equipment — such as inlet and outlet piping, effluent filter chamber, ladders and baffles — when installed according to tank manufacturer's current Installation Manual and Operating Guidelines.

B. Product Storage:

1. Tank shall be capable of storing wastewater products limited to the collection and storage of human solid or liquid organic sewage.
2. Tank shall be vented to atmospheric pressure.
3. Tank shall be capable of storing products identified in the manufacturer's current standard limited warranty.

C. Materials:

1. Tank shall be manufactured with 100% resin and glass-fiber reinforcement. No sand fillers.
2. Resin used in tank and accessories shall be premium isophthalic polyester.

D. Tank Dimensions (Refer to Xerxes literature on gallonage.):

1. Tank shall have nominal capacity of _____ gallons.
2. Tank shall have nominal outside diameter of _____ feet.

2.02 Accessories

A. Piping:

1. Schedule 40 PVC or FRP pipe shall be used for inlet and outlet piping.
2. When a PVC pipe is affixed to the tank, a fiberglass lay-up is used.
3. All piping shall be factory-sealed to enable field tightness testing with at least one pipe opening provided with a threaded fitting for connecting a pressure-test manifold.

B. Access Openings:

1. All access openings 24 inches in diameter or larger shall be manufactured of FRP.
2. Location(s) shall be as shown on tank drawings.
3. Optional riser extensions shall be FRP or PVC.
4. With tanks designed for on-site tightness testing, all access openings shall be factory-sealed to enable field tightness testing.

C. Optional Anchor Straps:

1. Straps shall be FRP anchor straps as supplied by tank manufacturer.
2. Number and location of straps shall be specified in current literature by tank manufacturer.

D. Optional Ladders:

1. Ladders shall be the standard ladder as supplied by tank manufacturer.

E. Optional Fittings:

1. All threaded fittings shall be constructed of carbon steel or FRP.
2. All standard threaded fittings shall be half-couplings and shall be 2", 4" or 6" in diameter. Reducers are to be used for smaller sizes where shown and provided by contractor.
3. All FRP and PVC nozzles shall be flat-faced and flanged, and shall conform to ANSI B16.5 150# bolting pattern.

F. Optional Internal Pump Platforms:

1. Pump platforms shall be FRP.
2. Contact tank manufacturer with pump details, such as dimensions and weight

Part III: Testing and Installation

3.01 Testing

A. Testing—Tank shall be tested according to the Xerxes Installation Manual and Operating Guidelines in effect at time of installation.

B. Optional Testing—Prior to installation, a tank-tightness test consisting of a 5 psig air pressure/soap test shall be performed (3 psig for 12-foot-diameter tanks) per the tank testing procedures outlined in the Xerxes

Guide Specifications – Single-Wall FRP Tanks for Septic Use

Installation Manual and Operating Guidelines in effect at time of installation.

3.02 Installation

A. Contractor shall be trained in proper installation procedures by the tank manufacturer, the state or other approved agency.

B. Tank shall be installed according to the Xerxes Installation Manual and Operating Guidelines in effect at time of installation.

Part IV: Warranty

4.01 Warranty

A. Warranty shall be manufacturer's standard limited warranty for underground septic tanks in effect at time of purchase.

Limited Warranty

Underground Septic Tanks

Xerxes Corporation ("Xerxes") warrants to ("Owner") that our underground septic tanks, and all Xerxes manufactured septic tank accessories, if installed, used and maintained in the United States in accordance with Xerxes' published specifications, installation instructions and operating guidelines, all applicable laws and regulations, and the limited septic applications defined herein, will be free from material defects in materials and workmanship for a period of one (1) year from date of original delivery by Xerxes. Septic applications for purposes of this warranty are limited to the collection and storage of solid or liquid organic sewage and wastewater at temperatures not to exceed 140° F.

If any tank is to be removed from an installation, moved to Owner's new location and is intended for active service at the new location, the tank must be recertified by Xerxes in order to maintain the warranty as originally extended. The foregoing warranty does not extend to tanks or accessories (collectively "Goods") damaged due to acts of God, war, terrorism, or failure of Goods caused, in whole or in part, by misuse, improper installation, storage, servicing, maintenance, or operation in excess of their rated capacity, contrary to their recommended use, or contrary to the septic applications defined above, whether intentional or otherwise, or any other cause or damage of any kind not the fault of Xerxes. Xerxes only warrants repairs or alterations performed by Xerxes or its authorized contractors. Xerxes does not warrant any product, components or parts manufactured by others.

XERXES' OBLIGATIONS UNDER THIS LIMITED WARRANTY ARE NULL AND VOID IF A TANK HAS BEEN USED FOR PRODUCTS CONTAINING A "HAZARDOUS SUBSTANCE" AS DEFINED BY THE COMPREHENSIVE ENVIRONMENTAL RESPONSE, COMPENSATION AND LIABILITY ACT OF 1980 (CERCLA OR "SUPERFUND") WHICH DESIGNATES CERTAIN CHEMICALS AS "HAZARDOUS SUBSTANCES." SEE 42 UNITED STATES CODE, SECTION § 9601 (14).

Owner's sole and exclusive remedy for breach of warranty is limited at Xerxes' option to: (a) repair of the defective tank or accessory, (b) delivery of replacement tank or accessory to the point of original delivery, or (c) refund of the original purchase price. A claimant must give Xerxes the opportunity to observe and inspect the tank and/or accessory prior to removal from the ground or the claim will be forever barred. All claims must be made in writing within one (1) year after tank and/or accessory failure or be forever barred. THE FOREGOING LIMITED WARRANTY CONSTITUTES XERXES' EXCLUSIVE OBLIGATION AND XERXES MAKES NO OTHER WARRANTY OR REPRESENTATION, EXPRESS OR IMPLIED, WITH RESPECT TO THE TANK OR ANY SERVICE, ADVICE, OR CONSULTATION, IF ANY, FURNISHED TO OWNER BY XERXES OR ITS REPRESENTATIVES, WHETHER AS TO MERCHANTABILITY, FITNESS FOR A PARTICULAR PURPOSE, OR OTHERWISE. THE SELLER (XERXES) UNDERTAKES NO RESPONSIBILITY FOR THE QUALITY OF THE GOODS, EXCEPT AS OTHERWISE PROVIDED IN THIS CONTRACT. THE SELLER (XERXES) ASSUMES NO RESPONSIBILITY THAT THE GOODS WILL BE FIT FOR ANY PARTICULAR PURPOSE FOR WHICH YOU (OWNER) MAY BE BUYING THESE GOODS, EXCEPT AS OTHERWISE PROVIDED IN THE CONTRACT. THE REMEDIES SET FORTH IN THE ABOVE LIMITED WARRANTY ARE THE ONLY REMEDIES AVAILABLE TO ANY PERSON OR ENTITY FOR BREACH OF WARRANTY OR FOR BREACH OF ANY OTHER COVENANT, DUTY, OR OBLIGATION ON THE PART OF XERXES. XERXES SHALL HAVE NO LIABILITY OR OBLIGATION TO ANY PERSON OR ENTITY FOR BREACH OF ANY OTHER COVENANT, DUTY, OR OBLIGATION UNDER THIS LIMITED WARRANTY EXCEPT AS EXPRESSLY SET FORTH HEREIN. IT IS EXPRESSLY AGREED THAT THIS LIMITED WARRANTY DOES NOT FAIL OF ITS ESSENTIAL PURPOSE. XERXES SHALL HAVE NO LIABILITY FOR COSTS OF INSTALLATION OR REMOVAL OF GOODS, ENVIRONMENTAL CONTAMINATION, FIRES, EXPLOSIONS, OR ANY OTHER CONSEQUENCES ALLEGEDLY ATTRIBUTABLE TO A BREACH OF WARRANTY, OR INCIDENTAL, CONSEQUENTIAL, PUNITIVE OR OTHER DAMAGES OF ANY DESCRIPTION, WHETHER ANY SUCH CLAIM OR DAMAGES BE BASED UPON WARRANTY, CONTRACT, NEGLIGENCE, STRICT LIABILITY OR OTHER TORT, OR OTHERWISE. IN NO EVENT SHALL XERXES' TOTAL LIABILITY HEREUNDER EXCEED THE ORIGINAL PURCHASE PRICE OF THE GOODS WHICH GAVE RISE TO SUCH LIABILITY.

Consumer Notice: This Limited Warranty gives you (Owner) specific legal rights. You (Owner) may also have other rights which vary from state to state.

Effective: 1/1/07

Xerxes Manufacturing Facilities

Anaheim, CA
Phone 714.630.0012
Fax 714.632.7133

Hagerstown, MD
Phone 301.223.6933
Fax 301.223.6836

Sequin, TX
Phone 830.372.0090
Fax 830.372.0321

Tipton, IA
Phone 563.886.6172
Fax 563.886.2042

ZCL Manufacturing Facilities

Edmonton, AB
Phone 800.661.8265
Fax 780.466.6126

Drummondville, QC
Phone 800.661.8265
Fax 780.466.6126

Waverley, NS
Phone 800.661.8265
Fax 780.466.6126

Hagerstown, MD

XERXES®
CORPORATION
a subsidiary of ZCL Composites Inc.

7901 Xerxes Avenue South
| Minneapolis | MN | 55431-1288
Ph: 952.887.1890 Fax: 952.887.1882

www.xerxescorp.com

© 2008 Xerxes Corporation

XWW10/08pp

International Wastewater Technologies

1931-A Kahai Street
Honolulu, HI 96819

Phone 808-833-2298
Fax 808-842-7719
E-Mail sales@iwt-epw.com

Quote

Quote 0013571
Date 4/1/2020
Sales rep JM

Bill To

Bow Engineering & Development, INC.
Mandi Chang
1953 South Beretania Street, #PH-A
Honolulu, HI 96826
Phone 808-369-8213 **Fax**

Ship To

Milolii, Beach Park

Purchase Order	Ship Via	FOB	Job	Contact	Terms
				Kelsie Sasabe	Due on receipt

Product	W/H	Description	Ordered	Price	Amount
Xerxes Holding Tank 8'D,10k	Main	Xerxes Holding Tank 8'D,10k gallons; 4" PVC sanitary tee INLET; NO BAFFLE WALL; 4-ea 24"D manways with 24"D x 12"H PVC access risers and 24 " Fiberglass bolt down lid-NON-TRAFFIC.	1.00 ea	30,547.84ea	$30,547.84
Xerxes Deadmen 8' x 10k Kit	Main	Xerxes Deadmen for 8-ft Diameter x 10,000 Gallon Single Wall FRP Tank. Kit includes 4-ea 16-ft concrete deadmen , 4-ea Standard Hold down straps ; and 8-ea Turnbuckles	1.00 ea	9,750.00ea	$9,750.00
Xerxes Holding Tank 8'D,5k	Main	Xerxes Holding Tank 8'D,5k gallons; 4" PVC sanitary tee INLET; NO BAFFLE WALL; 2-ea 24"D manways with 24"D x 12"H PVC access risers and 24" Fiberglass bolt down lid-NON-TRAFFIC.	1.00 ea	18,817.42ea	$18,817.42
Xerxes Deadmen 8' x 5k Kit	Main	Xerxes Deadmen for 8-ft Diameter x 5,000 Gallon Single Wall FRP Tank. Kit includes 2-ea 16-ft concrete deadmen , 2-ea Standard Hold down straps ; and 4-ea Turnbuckles	1.00 ea	4,875.00ea	$4,875.00
Alarm Package	Main	Alarm Package: 1-ea Normally Open, Wide Angle Float 1-ea Battery operated Alarm Panel *DOES NOT INCLUDE ANY INSTALLATION*	1.00 ea	575.00ea	$575.00
Shipping & Handling	Main	Shipping and Handling Estimate. Any differences will be invoiced accordingly. Shipping and delivery to job site of both 5k and 10k tanks. CONTRACTOR TO OFFLOAD.	1.00 ea	13,834.93ea	$13,834.93
Contractor/Cus Responsibilities	Main	Contractor/Customer Responsibilities. IWT not responsible for unverified items, quantities, and any associated shipping costs. Contractor/Customer is responsible to verify all items, quantities, and shipping costs.	1.00 ea	0.00ea	$0.00

TERMS & CONDITIONS

1. Order will proceed with a signed copy of this quote and 50% deposit. 25% is due when items ship. 25% due before tank can be delivered.
2. Lead times:
   -After receipt of signed quote and 50% deposit, allow 2 weeks to produce construction drawings.
   -After signed constructions are received, allow 4-6 weeks for production PLUS transit time.

This quote valid for 30 days. Items are subject to prior sale. Prices do not include installation or any professional services - unless otherwise stated. Order will proceed only when quote is signed, dated and returned to IWT. Accounts not paid within terms are subject to a 1.5% monthly service charge. Any discrepancies must be reported within 7 days of receiving materials. Any returns must have prior approval. Returns may be subject to a 25% restocking fee. ALL SALES FINAL ON SPECIAL ORDERS. There will be a $25.00 fee for returned checks. Make checks payable to: International Wastewater Technologies. A storage fee may be incurred with items not picked up within 2 weeks. A 3% service charge will be added for credit card charges of $5,000 or more.

Sub-total	**$78,400.19**
Sales tax	**$3,694.22**
Total	**$82,094.41**

*** QUOTE IS AUTHORIZED AND APPROVED BY:**

Signature: _____ Date: _____

ATTACHMENT 3

EVAPORATIVE TOILET SYSTEM

Enviro Loo C-60 Configuration & Specifications

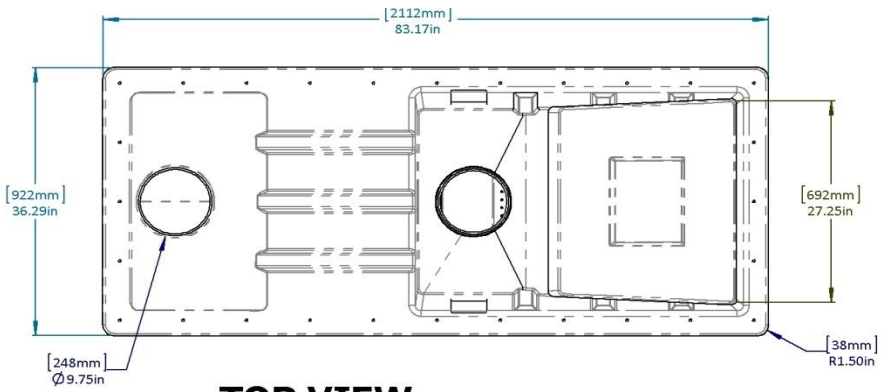

TOP VIEW

Capability: 60 uses per day, 21,900 per year	
Tank Length inside	76.5 inches, 1945 mm
Tank Width inside	29.5 inches, 750 mm
Height of unit to exhaust stack flange	51.5 inches, 1308 mm
Maximum burial depth to mating flange	30 inches, 762 mm
Total Air Volume of unit	44 Cu Ft.
Maximum liquid volume to mating flange	240 gallons
Liquid Volume to bottom of drying tray	80 gallons
Evaporation efficiency is reduced between 50 & 75 gallons	
If liquid level approaches the bottom of drying tray, unit should be pumped by a vacuum truck.	

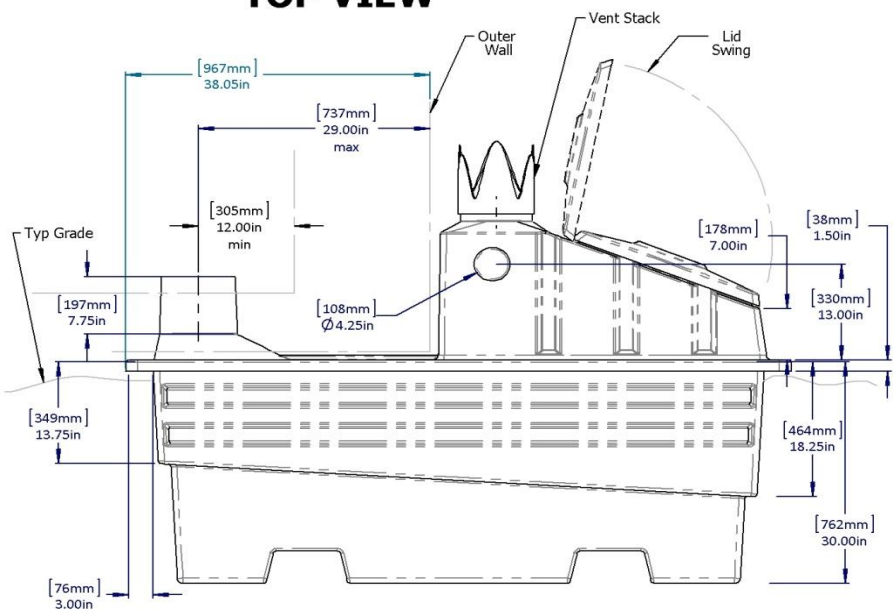

SIDE VIEW

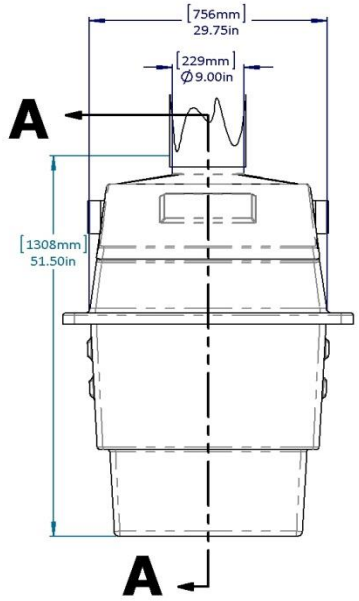

END VIEW

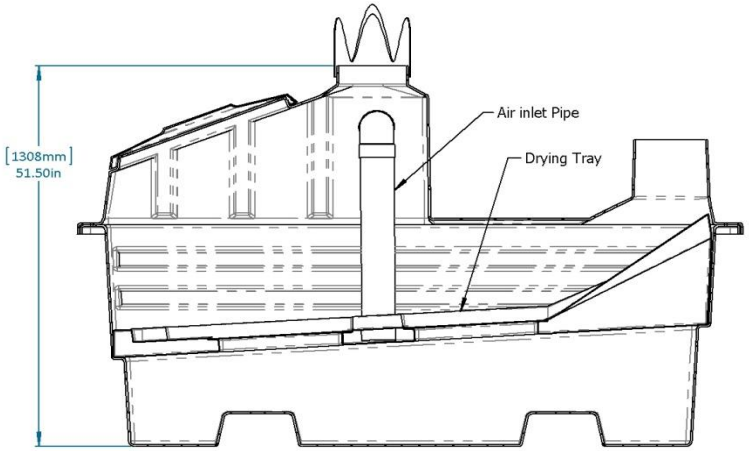

SECTION A-A

Enviro Loo USA/SWSLoo, Inc. 2005 FM 1704, Elgin, Texas 78621 www.swsloo.com 512.285.9494/FAX 512.281.3436

THE ENVIRO LOO

Model: Commercial C-60
Installation INSTRUCTIONS

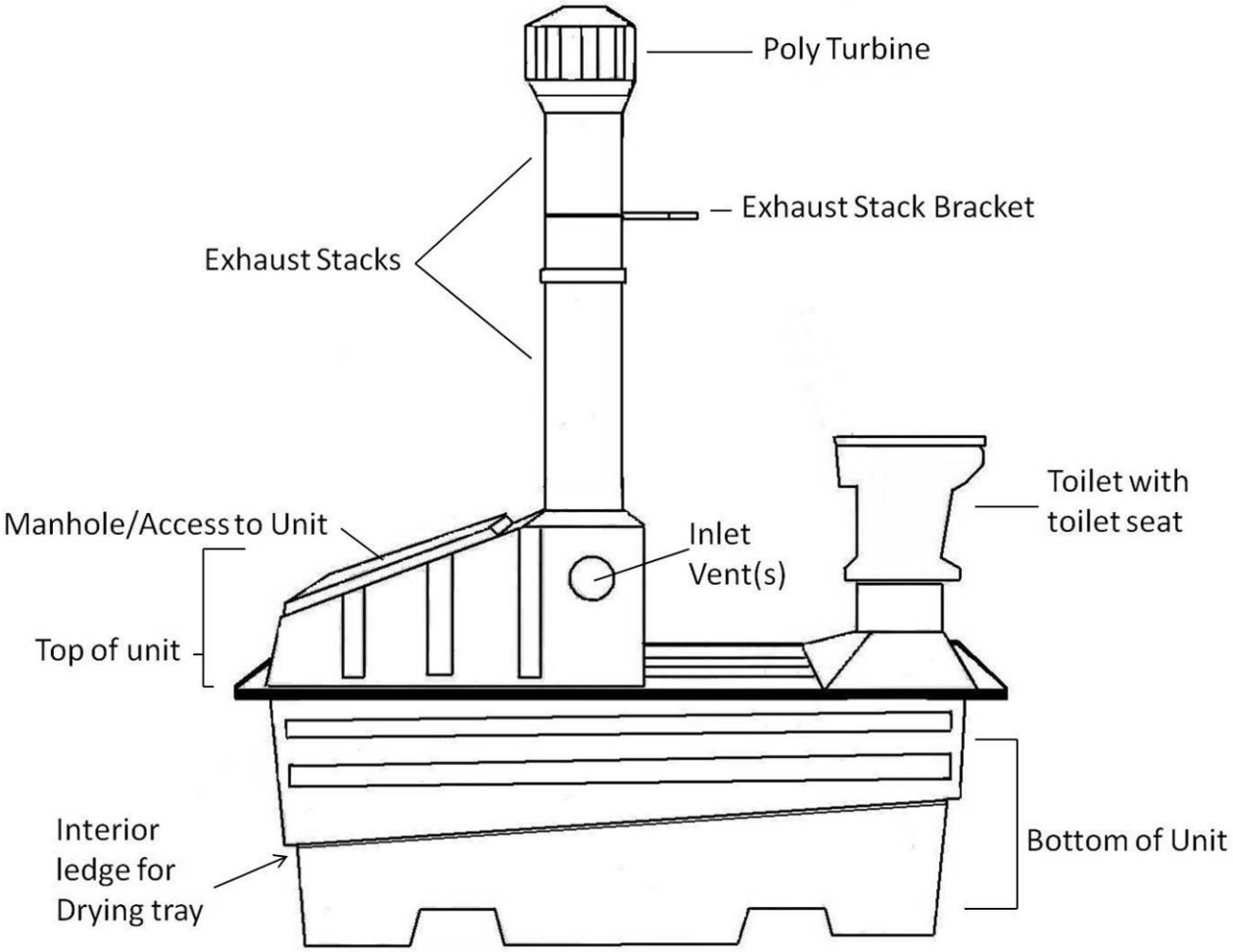

Please **call** us if you have any questions. It is very important that the Eloos are assembled correctly.
We are always happy to help.
Thank you for your business.

Toll Free: 866-797-3566
Or: 512-285-9494

© SWSLoo, Inc 2014

Parts and Pieces Inside Your Shipment

If your unit has been shipped unassembled, please see assembly instructions prior to installation instructions. However, if you've already assembled the unit, or it was shipped assembled, please follow the directions to insert the Inlet Vents and Inlet Vent Pipes prior to actual installation.

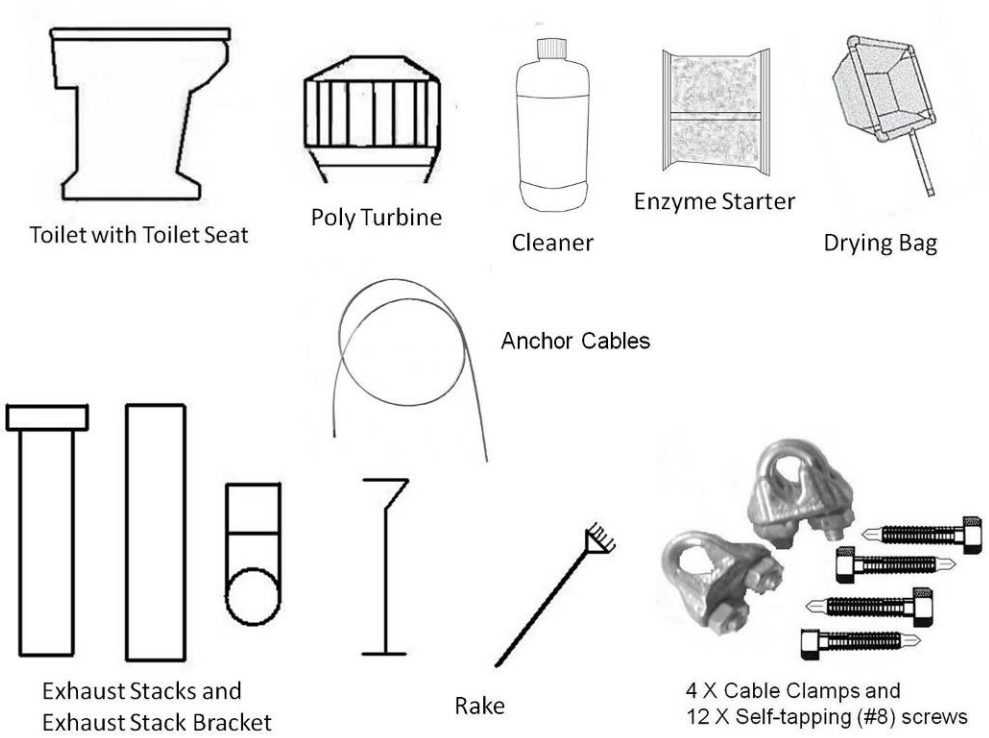

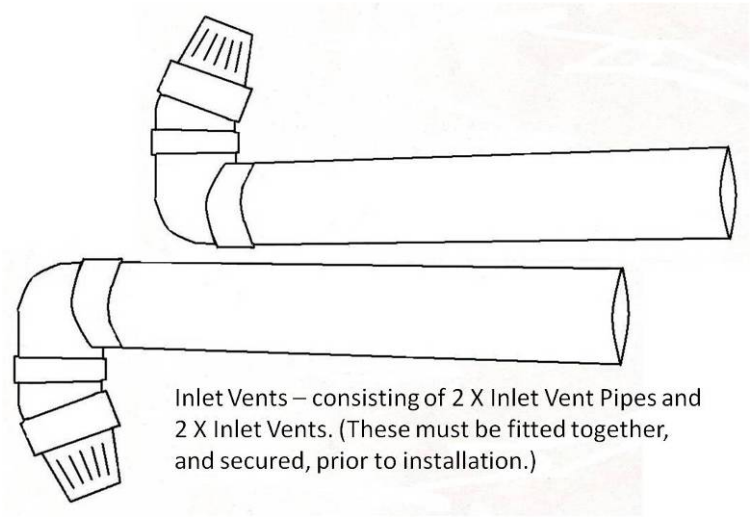

© SWSLoo, Inc 2014

Inlet Vent Installation

1.) The inlet vents come separated, as pipes – usually in exhaust stack, and the vent pieces – usually in the drying bag. They have been marked for your convenience.

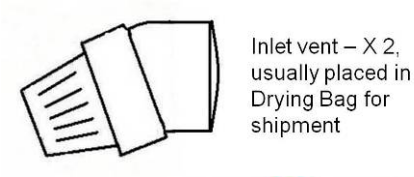

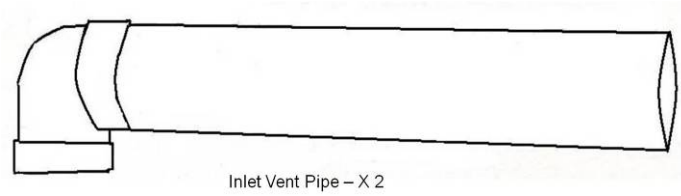

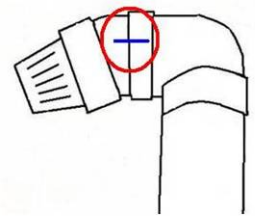

Both the Inlet Vents and the Inlet Vent Pipes have been marked for your convenience. The Inlet Vents will be placed from outside the unit, while the Inlet Vent Pipes are placed inside the unit. These pieces can be matched by using the lines provided.

You will need to place the Inlet Vent Pipes inside the unit. The bottom of the pipes will pass through the drying tray through the designated slots. Insert the Inlet Vents into the opening of the unit, from the outside, then reaching through the manhole/access to unit, bring the inlet vent pipe upwards, attaching the white fitting over the back of the inlet vent.

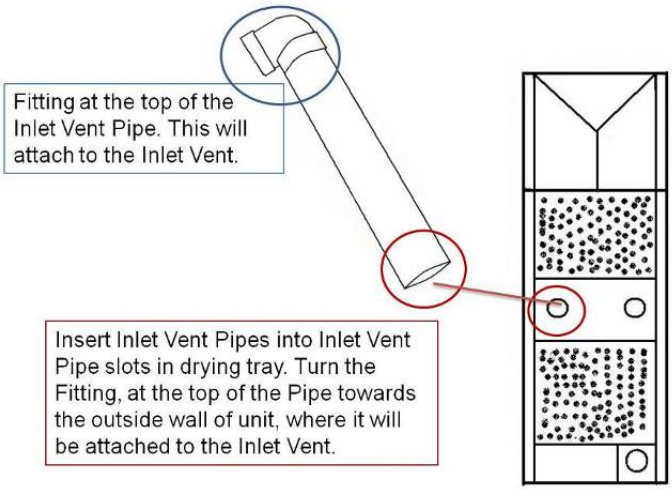

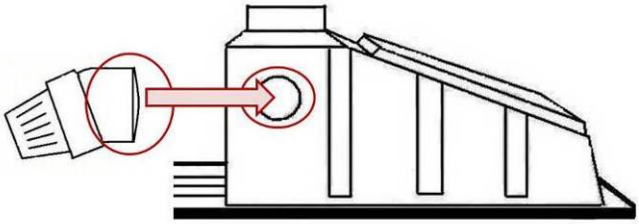

Place the Inlet Vent into the Inlet Vent Opening from the outside of the unit. The inserted end will attach to the Fitting at the top of the Inlet Vent Pipe inside the unit.

© SWSLoo, Inc 2014

ELoo Installation Instructions

Once your ELoo has the Inlet Vents inserted, permanently secure them using PVC pipe glue or a #8 Self-tapping screw. **Make sure fittings are fully seated.**

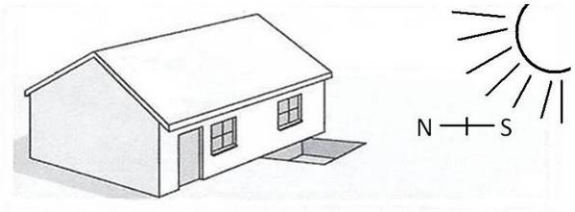

When locating the ELoo, ensure that the inspection cover receives the maximum possible sunlight by placing the unit on the South-side (in the northern hemisphere).

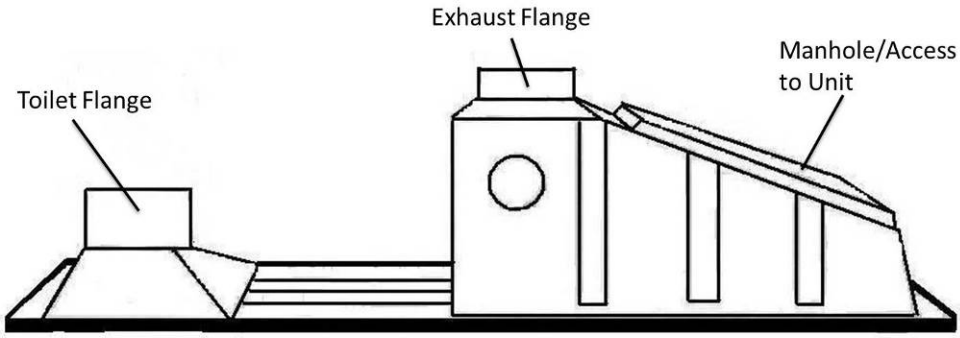

** To prevent construction materials and other undesirable material entering the ELoo during installation – **COVER** Toilet Flange and Exhaust Flange and keep Manhole/Maintenance Hatch closed. Covers have been provided for you and should remain in place for surround construction.**

A.) Underground Installation

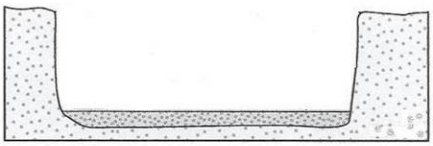

Excavate a pit: 8.5' l X 4' w X 24-30" h (2600mm X 1200mm X 750mm). Ensure accurate alignment & height to final floor level.

Note: If the units are outside toilet structures, we recommend a step-up of 8" inches (200mm) to avoid storm water run-off.

- Remove rocks from the bottom of the pit that may cause damage to the unit. Use roughly 2" (50mm) river sand or soft soil to level the bottom of the pit. If installing the unit in clay or high groundwater area, concrete footings can be poured in the bottom of the pit leaving exposed rebarb or adding hooks for securing tie downs for the anchor cables provided.

See Urinal Instructions if you are adding a Urinal to your Installation.

© SWSLoo, Inc 2014

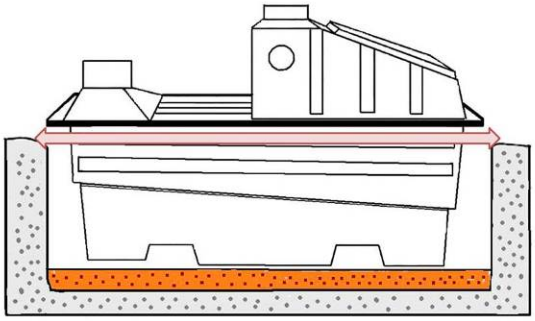

Lower the assembled unit into the pit. The red arrow shows the position of suggested ground level. (1' or 12" (300mm) from ground level to base of inspection hole cover.)

Note: If urinal is to be added, connect piping to the unit by drilling a hole below the ledge for the drying tray & installing a bulkhead connector. Do this before backfilling the excavation.

The unit MUST to be anchored to avoid floatation. Attach anchors level and evenly on either side of the bottom of the unit. (Position rear anchor cable between unit and inverted bolts.) When backfilling, ensure anchors remain in position.

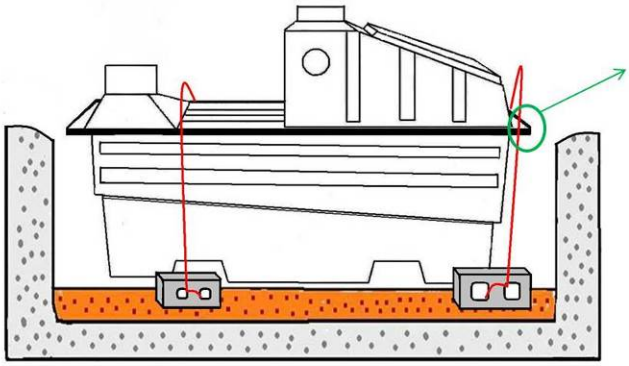

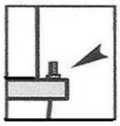

Set rear Anchor Cable between unit and Inverted 1 ½" bolt.

Attach the Anchor Cables to concrete blocks (or appropriate anchoring for soil conditions) using the 4 Cable Clamps provided. The ELoo **MUST** be anchored to prevent floatation.

© SWSLoo, Inc 2014

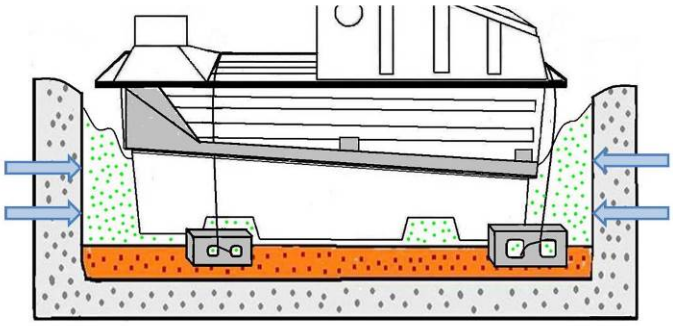

Use a soil-crete or medium heavy loaming soil (class III) for backfilling. Backfill evenly and compact gently all around the unit. Ensure that the unit stays level through its length and breadth.

During backfill procedures, ensure that the drying tray remains in place on the supporting ledge. Do not compact backfill over the level of the tray, without ensuring the above. Make sure that the container sides do not bulge inwards from over compaction (white arrows), by viewing through the inspection cover or by standing on the sides of the drying plate inside the container.

****Note**:** Ensure that the prevailing geo-technical conditions have been checked and that adequate stabilization procedures have been specified to prevent flotation and/or damage to the unit.

B.) Above ground Installation

Please call SWSLoo, Inc
866-797-3566
Or 512-285-9494
Additionally you can email:
George@swsloo.com

© SWSLoo, Inc 2014

Building Slab For ELoo Surround

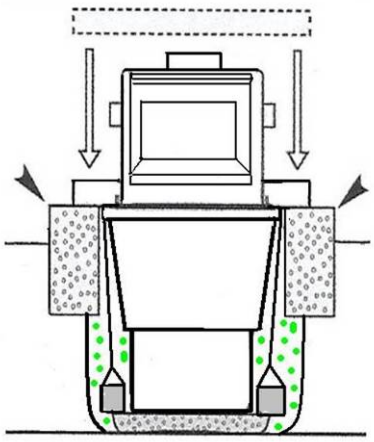

Pour foundations on left and right sides of the unit to carry the back wall lintels.

These specifications must be supplied by the contractor and/or engineer responsible for the installation and/or construction.

The interior face of the rear wall should be built 11 – 13" inches (315mm) from the center of the toilet flange.

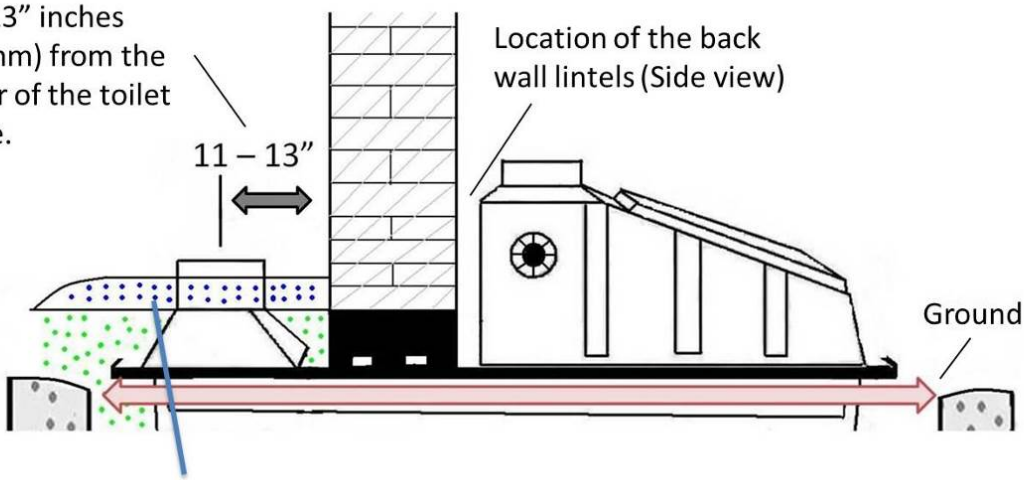

-Position batter boards to pour floor slab to ensure that approximately +/- 1 ½" inches (40mm) of the toilet flange protrudes above the finished floor level for mating the toilet bowl to the unit.
- Pour the floor slab according to the engineer's specifications.

Completed structure MUST have a vent

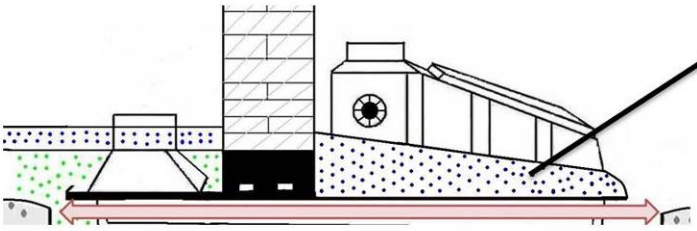

Optional: Cast a sloping concrete shoulder apron around the inspection hole end of the unit for storm water control and to prevent seepage into the backfill material.

© SWSLoo, Inc 2014

Installation of Remaining Components:

Toilet:

Depending on the final floor level, excess protruding toilet flange may need to be cut off or a riser added.

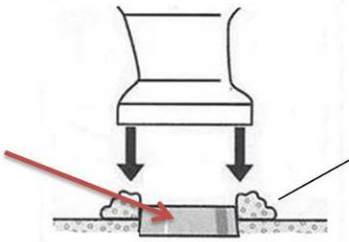

Position/secure the toilet bowl onto the toilet flange protruding from the floor slab; adhere with contractor's cement and/or bolts/screws.

The base of the toilet bowl MUST rest on the floor slab.

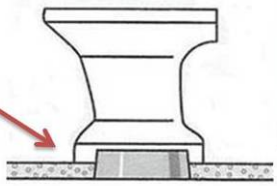

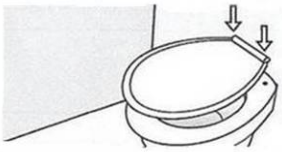

Secure toilet seat and lid on the plastic bolts on the toilet as per the instructions on the box.

Exhaust Stacks:

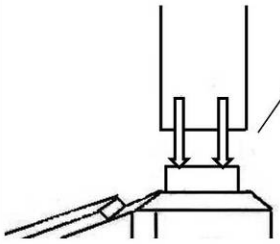

Install the exhaust stack without a collar over the flange on the top of the unit. It will be a tight fit but it will completely cover the flange. Secure the stack to the flange with 4 of the #8 self-tapping screws provided.

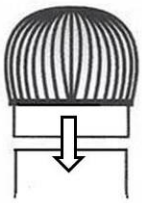

Secure the turbine to the second exhaust stack section, securing with #8 Self-tapping screws. Then fit the collared end to the first stack with the #8 self-tapping screws provided.

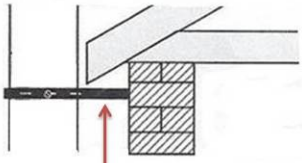

Position the exhaust stack bracket as high as possible on the rear wall for maximum support and ensure the exhaust stack is straight & vertical as indicated.

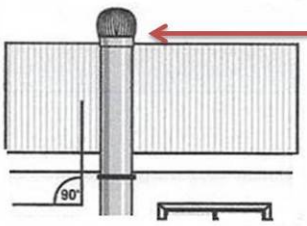

The ventilation extraction unit/turbine must be positioned above the pitch of the roof to ensure adequate and consistent ventilation.

© SWSLoo, Inc 2014

Drying Bag and Rake:

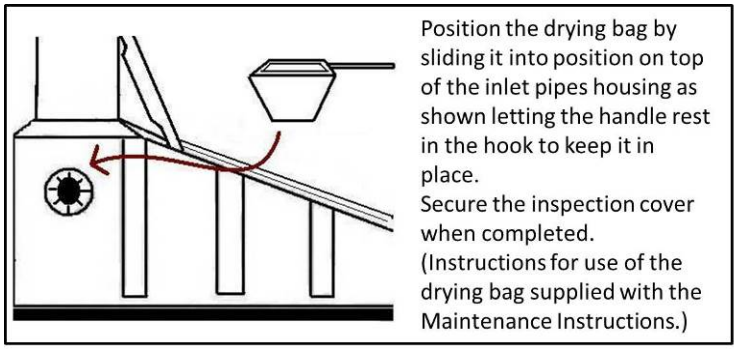

Position the drying bag by sliding it into position on top of the inlet pipes housing as shown letting the handle rest in the hook to keep it in place.
Secure the inspection cover when completed.
(Instructions for use of the drying bag supplied with the Maintenance Instructions.)

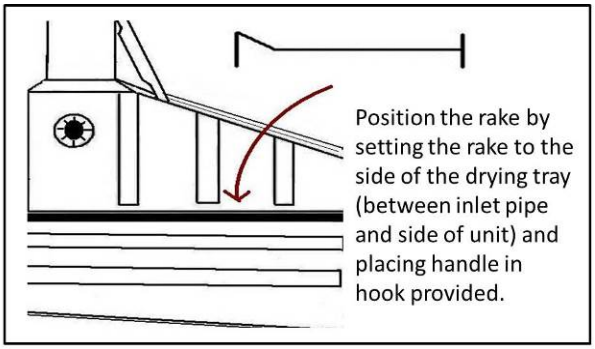

Position the rake by setting the rake to the side of the drying tray (between inlet pipe and side of unit) and placing handle in hook provided.

Enzyme:

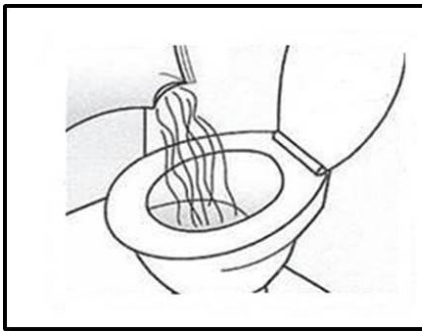

Pour the contents of the bag of organic starter enzyme through the toilet bowl when first used.

Your ELoo is now ready to be used!

Keep lid closed at all times when the toilet is not in use to insure the primary air flow is through the exterior inlet vents.

Auxiliary Items available for purchase from SWSLoo, Inc (including an auxiliary fan to assist with air flow and a urinal).

© SWSLoo, Inc 2014

MAINTENANCE INSTRUCTIONS FOR THE ENVIRO LOO

Enviro Loo owners or their employees can comfortably perform these maintenance tasks themselves. The maintenance schedule depends largely on the volume of usage and climatic conditions. While high usage units may need to be serviced and waste removed more often, the lower usage unit will need attention less frequently.

PERIODIC – MAINTENANCE PROCEDURE

1. Open the rear external inspection cover. The drying bag should rest on top of the inlet pipes, retained in place by the inverted hook on the forward wall of the unit. The small hook of the left side of the unit is for storing the rake.
2. Check that the liquid level is below the drying tray and that the system is in an aerobic state of operation, i.e. liquid waste is separated from solid waste by the drying tray. Spread out any build up of solid waste from the slide plate and forward section of the drying tray towards the open rear-end section of the drying tray using the rake provided.
3. Each section of the drying tray can be considered a stage or level of drying, with the bag being the last stage before removal. Accumulation of solid waste, paper, etc., the residue, can be removed from the unit with the rake and drying bag or large dust pan.
4. Drying bag can be emptied into a large plastic bag or bucket and safely disposed of with other household waste. If the solids are still damp the bag may be returned to the top of the unit to continue drying.
5. Ensure free operation of the wind turbine on top of the external vent pipe.
6. Ensure free airflow to side inlet pipes.
7. If equipped, ensure audio/visual alarm works properly.
8. In the event of exceptional accumulation of liquid, vacuum out and remove the liquid from the liquid holding area below the drying tray. This is accomplished by inserting a pipe or hose through the service hole located in the back end of the drying tray. If necessary the white perforated panel in the tray can be temporarily removed for cleaning.

TOOLS REQUIRED FOR MAINTENANCE PROCEDURE

- Long handle narrow head or metal rake and locally purchased large shop-type dust pan not more than 18" wide if no bag is provided.
- Plastic container/bag for safe removal of waste from the site

SAFETY CLOTHING

- Sanitary gloves
- Facemask
- Hairnet, rubber boots, Overalls (if required by site or local authorities)

DAILY CLEANING

Inside toilet cubicle ensure that normal hygienic cleaning procedures are maintained on a daily and regular basis. Mix 2 oz cleaner with non-chlorinated water in a 16 oz spray bottle.
PROCEEDURE:

- The toilet bowl must be cleaned using only the organic cleaner provided and a damp toilet brush-no chemical detergents should enter the unit. Spray toilet bowl, scrub, spray.
- Toilet seat may be cleaned with regular chemical detergents while ensuring that excess liquids do not enter the toilet bowl.
- Ensure that the toilet lid is left in the closed position after each use and after cleaning the toilet bowl.

Kelsie Sasabe

From: Jeri Witta <jeri@swsloo.com>
Sent: Monday, April 6, 2020 6:32 AM
To: Kelsie Sasabe
Subject: Information on the Eloo
Attachments: C60 specs 2_Logo.pdf

Kelsie:

Thank you so much for getting back in touch with us about the Eloo.

I have checked my files and found that we received an order from Brigham Young University in Hawaii for a C-60 Commercial Eloo in December 2019. We have not shipped because of all this Corona Virus mess but communications with them indicates that they are still planning on the purchase. Other sales to Hawaii have been private residences/cabins.

The C-60 Commercial Eloo sells for $4,250.00 + shipping. If you will send me the destination zip code I will be happy to get you a shipping estimate. In addition, if you are planning on using the Eloos as Unisex units, I strongly recommend the addition of a urinal. This will speed up the people through the unit and we have found that ladies are less reluctant to use a unit that has a urinal in it. This would add about $125.00 to the cost of the unit.

Instead of sinks, I assume with water, could you use the waterless handcleaner? We are all very failiar with that rught now. The State of Texas allows that instead of the traditional sink.

Please get back with me if you have additional questions. Sorry for the delay in response but I wanted to check through my files for activity in Hawaii.

Best regards and stay safe,

--

Jeri Witta
SWSLoo, Inc
VP, Admin, & Finance
866.797.3566
www.swsloo.com

ATTACHMENT 4

PREFABRICATED WATERLESS RESTROOM

STRUCTURE SPECIFICATIONS
FOR STANDARD OUTBACK WRS VAULT
EVAPORATOR™
RESTROOM FACILITY

SAMPLE

SPECIAL PROVISIONS - BUILDING CONSTRUCTION SPECIFICATION

Basic Considerations

A. Furnishing a plant-fabricated restroom and foundation/vault, installed in accordance with this and other sections of these specifications. The structure must meet or exceed these specifications.

B. The contractor will furnish and install plant fabricated facility, **Model #OUTBACK** National Value Engineered Structures by Biological Mediation Systems, LLC., Ft. Collins, CO 80526, 1-800-524-1097.

C. The building and foundation/vault must be engineered and prefabricated, including building structure, foundation/vault, wiring, and other elements shown on the drawings. Building supplier must be registered to build prefabricated buildings in the state in which they are manufactured. The building shall be factory constructed on a precast concrete slab.

D. The building will be shrink wrapped for protection during transportation. During transportation if rain or snow is encountered the building may arrive dirty. Cleaning the building will be the responsibility of the contractor/owner. The contractor/owner will be responsible for touch up painting and repair from screws and nails used to attach shrink wrap. Touch up paint will be provided.

Site Preparation, Excavation and Fill

A. Initial site preparation will be under the direction of the governing agency (owner), i.e., removal of existing lawns, shrubs, or dirt in the area of the building.

B. All materials and design of walkways, ramps, railings, piers and/or column footings will be provided by contractor/owner.

C. The crane for off loading and setting the structure onsite will be the responsibility of the contractor/owner. One hour will be allowed for off loading. Additional charges will be billed to the contractor/owner for delays. A spreader bar assembly will be required. The dimensions for the lifting points are outlined on a shop drawing. These must be reviewed by the crane company for clarification as to the requirements of the spreader bar assembly. Contractor/owner will provide a clear and safe access to the building site for the delivery truck. This includes narrow bridges, limited weight bridges, low overhead obstructions and all traffic control if needed. If access cannot be provided via delivery truck, the contractor/owner will take delivery at an alternate site and will be responsible for final transportation to the job site. The pick-up lifts for the building slab will be provided by BMS. A deposit will be required for the lifts. The deposit will be returned when the lifts are returned to BMS.

Utility Hook-Ups

A. The main electrical supply, connection, meter and disconnect will be the responsibility of the contractor/owner. The main electrical supply can be brought through the exterior wall of the building, or as designated on the plans.

Anchoring of the Restroom

A. Anchoring the restroom to the foundation shall be per manufacturers drawings and specifications including weld plates between the floor slab and vault to be supplied by BMS and field installed by the contractor/owner.

BUILDING MATERIAL / CONSTRUCTION SPECIFICATION

A. The structure shall be National Value Engineered Structures **Model #OUTBACK**, by Biological Mediation Systems, LLC.

B. The structure shall consist of two factory constructed units, the building and the vault. The vault shall be a water tight vault with a factory installed spray in two part 100% solid polyurethane chemical resistant liner. The vault shall be built by a precast company that is currently certified by the National Precast Concrete Association. All necessary connections between the building and foundation/vault will be the responsibility of the contractor/owner. The restroom module shall be factory constructed complete with trusses, decking and roofing materials.

C. The structure shall be designed under the direct supervision of a Professional Engineer licensed in the State of and all plans shall bear his seal.

D. The owner will be responsible for all licenses, permits, taxes and approvals.

I. Precast Concrete Floor System and Foundation/Vault

A. Restroom floor: The floor shall be a one piece structural monolithic precast concrete slab manufactured in a closed environmentally controlled plant. Concrete to develop 5,000 psi in 28 days. The floor slab shall be designed and engineered with pick-up points for possible future relocation. The slab shall be 6" thick concrete with a 6" steel angle around the pick-up points of the slab, the floor finish shall have a non-skid broom finish. After the slab is cured it will be sealed with a two part epoxy coating. Anchor bolts shall be 5/8" with 2 x 2 x 3/16 plate washers. The anchor bolts will be embedded in a minimum 4" of concrete, the walls will be installed directly on concrete. Installation of walls on ferrous (steel) surfaces will not be permitted. Floor drains will be precast into the slab.

B. Foundation shall be manufactured in a closed environmentally controlled plant. Construction shall be 6" thick concrete floor with 4" concrete walls. Concrete to develop 5,000 psi in 28 days. The floor slab shall be designed and engineered with pick-up points for possible future relocation.

C. There will be four (4) weld plates cast into the top of the vault. 4" x ¼" x 6". BMS will provide four (4) 2" x ¼" x 6" weld plates that must be welded onsite by the contractor/owner. This will complete the connection between the floor slab and the foundation/vault.

D. Bidders must have minimum 3 years experience in building these floor systems. The floor system shall be built by a precast company that is currently certified by the National Precast Concrete Association.

II. Wood (Structural wood members to be S.Y.P., S.P.F., or Hem Fir)

A. Wall Framing: Nominal 2 x 4 and 2 x 6 at nominal 16" on center. Walls shall be built in single piece sections for lamination of the FRP interior wall system. All nails for structural framing shall be mechanically galvanized.

B. Roof Framing: Engineered trusses.

C. Roof Sheathing: 15/32 "CDX" plywood.

III. Thermal and Moisture Protection

A. Roofing Material: Shall be 26 ga. metal roofing with matching trim, factory installed. Color to be chosen by owner from standard color chart (26 GA/Colorfast 45® Finish). It shall be installed over 30# roof underlayment per manufacturer's recommendations.

B. Soffit/fascia: 26 ga. metal to match roof color.

C. Drip Edge: 3" X 3" 26 ga. metal to match roof color.

D. Sealants: 100% silicone sealant & latex paintable caulk.

E. Insulation R Value: Wall_____ Ceiling_____Other_____

F. Moisture Barrier: 30# felt

IV. Finishes

A. Restroom Interior: Vandal resistant seamless sanitary wall system. Product shall be Kemlite® with Surfaseal®. Fiberglass reinforced plastic wall system, floor to ceiling, corner to corner void of molding and drive rivet fasteners. Will not mildew, rot or rust. Easy to clean, resistant to high moisture and corrosive environment, can be scrubbed or steam cleaned. Graffiti and scratch resistant, color white. 3/32" thick, class A fire rated, pebble grain finish, fiberglass reinforced plastic (FRP) laminated to ACX Plywood.

B. Restroom Ceiling: Ceiling shall be fiberglass reinforced plastic (FRP). Color white.

C. Interior Wall Corner: 1½" x 1½", 93° stainless steel, fastened to wall with stainless steel vandal resistant screws.

D. Base: 4" x ⅛" extruded aluminum 6063-T6, clear anodized finish, with eased top edge, fastened to wall with stainless steel vandal resistant screws.

E. Exterior Siding:

F. Paint and/or staining: Color to be chosen by owner. The contractor/owner will be responsible for on site touch up painting and filling of any holes.

G. Corner Trim: Hardi Trim®, color to be chosen by owner.

H. Base Trim: Hardi Trim®, color to be chosen by owner.

V. Doors & Windows

A. Material: Doors shall be 18 gauge steel, frames shall be16 gauge steel. Frames shall have a wrap around design to cover the exterior and interior wall.

B. Hardware: All hardware shall meet ADA.

1. Closure: LCN146128
2. Deadbolts: Schlage B663
3. Door Lever: Schlage Rhodes D40S
4. Hagar Hinges ECBB1100
5. Door Sweep MM1480A

C. Windows: 12" x 48" 16 gauge metal windows with ¼" translucent Lexan®. The Lexan® product shall have a Five-year warranty against breakage.

D. Wall Vents: 16 gauge metal with ¼" bird and bug screen

VI. Electrical

A. EMT or MC cable throughout.

B. Underground Sleeve. Schedule 40 grey PVC, by contractor/owner.

C. Panel: Siemens GF221NR

D. Outlet: Leviton GFI.

E. Nema 3 Enclosure: 242410.

F. Power Converter: Magnateck Model 6509.

G. Restroom Lights: CVD-132EL with T8 15watt LED lamps, polycarbonate lense, and 16 gauge cold rolled steel with corrosion resistant white baked enamel finish.

H. 12 Volt Exhaust Fan: Papst 1224.

I. Light Timer: Intermatic Model STO1C.

VII. Specialties

1. 18" Grab Bar: 1½" diameter stainless steel with concealed fasteners.

2. 36" Grab Bar: 1½" diameter stainless steel with concealed fasteners.

3. 42" Grab Bar: 1½" diameter stainless steel with concealed fasteners.

4. Fixtures: H18 fiberglass toilet.

5. Toilet Paper Holders: BMS Model D-H2, ¼" thick stainless steel, exposed roll type with locking device and fastened to wall with stainless steel vandal resistant screws. Owner to supply pad lock.

VIII. Waste Reduction System

The system shall include the Model WRS Vault Evaporator™ (patent #5,573,661). The WRS system shall include the evaporator unit, vent pipe, roof mounted ventilator and factory installed spray in 2 part 100% solid polyurethane chemical resistant liner. The contractor/owner will be responsible for installing additional vent pipe and roof curb after the building has been delivered. The contractor/owner will also be responsible for installing the roof vent fan and final electrical connection to the fan.

Approved Equals

The _____ (AGENCY) shall determine all approved equals. In order to be considered an approved equal the following criteria must be met:

1. Manufacturers Literature: Submit complete manufacturer's literature and technical data.

2. Certification: Submit, via transmittal, properly identified with project name, location and date, certification of manufacturers compliance with the requirements specified herein signed and sealed by a Professional Engineer registered in the State of _____.

3. Submit a complete set of construction drawings signed and sealed by a Professional Engineer registered in the State of _____.

4. Submit (2) two, twelve inch, samples and specification sheets on the following items; basement materials, roof decking, laminated beams, fascia, interior finish, and exterior siding. Note: Materials must meet specifications.

5. Provide (3) three location and contacts of similar buildings of this nature, built within the last six months.

6. All equals must be approved (10) ten days before the bid date.

7. All approved equals shall be notified with written statements of their approval. Manufacturers shall not bid this project without this written notification.

Product Insurance

1. Manufacturer to provide minimum $2,000,000 PRODUCT/COMPLETED OPERATIONS coverage.

2. Carrier providing the coverage is rated BEST'S rating A or higher.

3. PRODUCT/COMPLETED OPERATIONS is an "occurrence" form basis.

4. Insurance certificate stating insurance coverage and compliance with the above requirements shall be submitted.

 All Rights Reserved

BMS WRS VAULT EVAPORATION SYSTEM
PATENT NO. 5,573,661

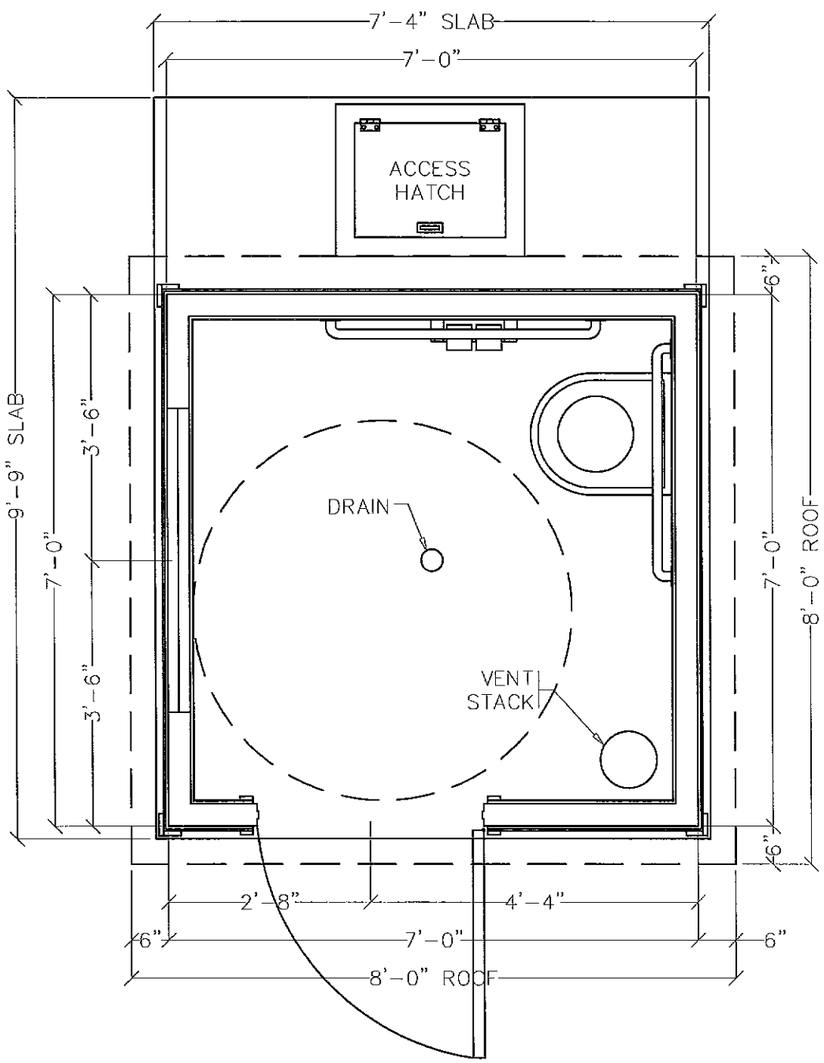

FLOOR PLAN
SCALE: 1/2" = 1'-0"

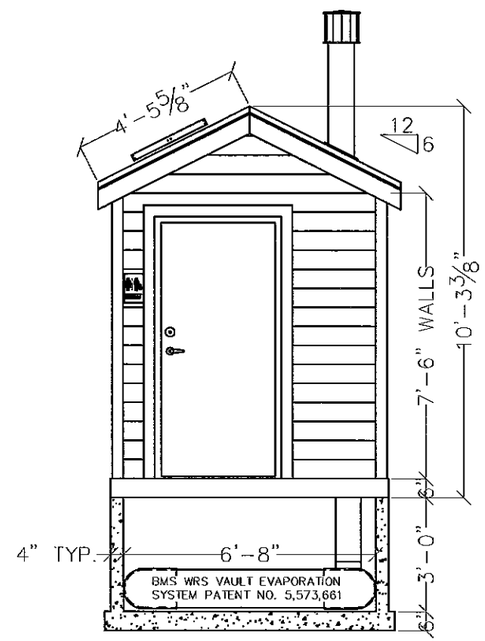

FRONT VIEW
SCALE: 1/4" = 1'-0"

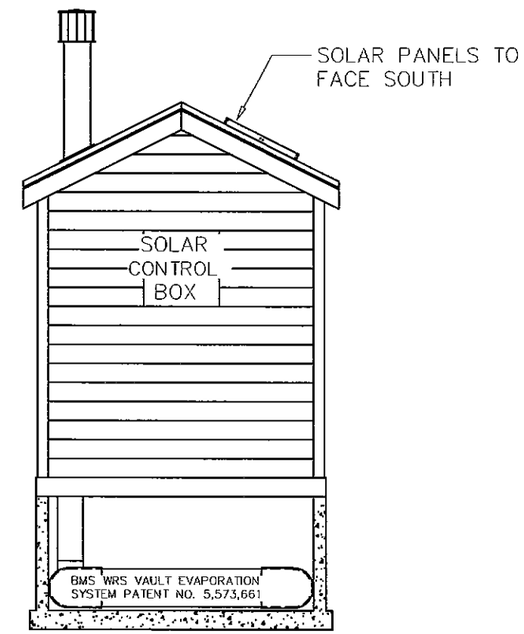

REAR VIEW
SCALE: 1/4" = 1'-0"

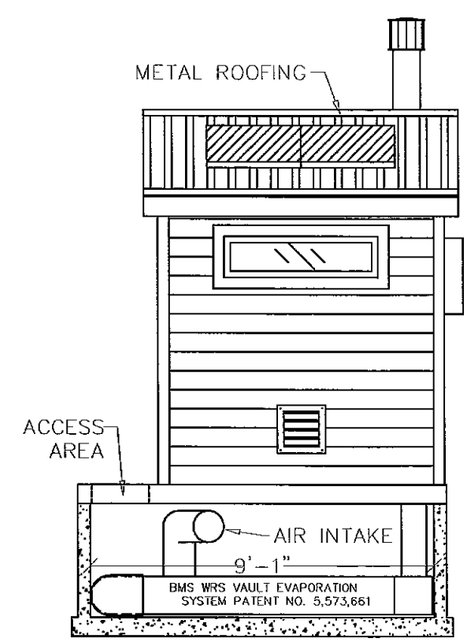

L. SIDE VIEW
SCALE: 1/4" = 1'-0"

PRELIMINARY DRAWING
NOT FOR CONSTRUCTION

BIOLOGICAL MEDIATION SYSTEMS, L.L.C.
NATIONAL VALUE ENGINEERED STRUCTURES
1-800-524-1097
BMS

DATE 9/2/09

THIS PRINT IS THE PROPERTY OF BIOLOGICAL MEDIATION SYSTEMS, L.L.C. AND IS NOT TO BE USED, COPIED OR, REPRODUCED WITHOUT EXPRESSED WRITTEN PERMISSION. THIS INFORMATION IS CONFIDENTIAL AND PROPRIETARY TO BMS, L.L.C. AND IS NOT TO BE REVEALED OR DISTRIBUTED TO OTHERS WITHOUT THE WRITTEN PERMISSION OF BMS, L.L.C. OR BE USED IN MANNER NOT SPECIFIED BY BMS, L.L.C.

*** IMPORTANT ***
NOTE: IT IS THE RESPONSIBILITY OF THE OWNER TO VERIFY THAT THESE PLANS MEET OR EXCEED ALL GOVERNING CODES. IT IS ALSO THE RESPONSIBILITY OF THE OWNER TO OBTAIN PLAN APPROVALS AND ALL WORK PERMITS BY GOVERNING AGENCIES

BMS MODEL OUTBACK - DC WITH LAP SIDING

STRUCTURE SPECIFICATIONS
FOR STANDARD WRS VAULT EVAPORATOR™
RESTROOM FACILITY

SAMPLE

SPECIAL PROVISIONS - BUILDING CONSTRUCTION SPECIFICATION

Basic Considerations

A. Furnishing a plant-fabricated restroom and foundation/vault, installed in accordance with this and other sections of these specifications. The structure must meet or exceed these specifications.

B. The contractor/owner will furnish and install plant fabricated facility, **Model #R2-167 WRS AC** National Value Engineered Structures by Biological Mediation Systems, LLC., Ft. Collins, CO 80526, 1-800-524-1097.

C. The building and foundation/vault must be engineered and prefabricated, including building structure, foundation/vault, wiring, and other elements shown on the drawings. Building supplier must be registered/certified to build prefabricated buildings in the state in which they are manufactured. The building shall be factory constructed on a precast concrete slab.

D. The building will be shrink wrapped for protection during transportation. During transportation if rain or snow is encountered the building may arrive dirty. Cleaning the building will be the responsibility of the contractor/owner. The contractor/owner will be responsible for touch up painting and repair from screws and nails used to attach shrink wrap. Touch up paint will be provided.

Site Preparation, Excavation and Fill

A. Initial site preparation will be under the direction of the governing agency (owner), i.e., removal of existing lawns, shrubs, or dirt in the area of the building.

B. All materials and design of walkways, ramps, railings, piers and/or footing columns will be provided by contractor/owner.

C. The crane for off loading and setting the structure onsite will be the responsibility of the contractor/owner. One hour will be allowed for off loading. Additional charges will be billed to the contractor/owner for delays. A spreader bar assembly will be required. The dimensions for the lifting points are outlined on a shop drawing. These must be reviewed by the crane company for clarification as to the requirements of the spreader bar assembly. Contractor/owner will provide a clear and safe access to the building site for the delivery truck. This includes narrow bridges, limited weight bridges, low overhead obstructions and all traffic control if needed. If access cannot be provided via delivery truck, the contractor/owner will take delivery at an alternate site and will be responsible for final transportation to the job site. The pick-up lifts for the building slab will be provided by BMS. A deposit will be required for the lifts. The deposit will be returned when the lifts are returned to BMS.

Utility Hook-Ups

A. The main electrical supply, connection, meter and disconnect will be the responsibility of the contractor/owner. The main electrical supply can be brought through the exterior wall of the building, or as designated on the plans.

Anchoring of the Restroom

A. Anchoring the restroom to the foundation shall be per manufacturers drawings and specifications including weld plates between the floor slab and vault to be supplied by BMS and field installed by the contractor/owner.

BUILDING MATERIAL / CONSTRUCTION SPECIFICATION

A. The structure shall be National Value Engineered Structures, **Model #R2-167 WRS AC** by Biological Mediation Systems, LLC.

B. The structure shall consist of two factory constructed units, the building and the vault. The vault shall be a water tight vault with a factory installed spray in two part 100% solid polyurethane chemical resistant liner. The vault shall be built by a precast company that is currently certified by the National Precast Concrete Association. All necessary connections between the building and foundation/vault will be the responsibility of the contractor/owner.

C. The structure shall be designed under the direct supervision of a Professional Engineer licensed in the State of and all plans shall bear his seal.

D. The owner will be responsible for all licenses, permits, taxes and approvals.

I. Precast Concrete Floor System and Foundation/Vault

A. Restroom floor: The floor shall be a one piece structural monolithic precast concrete slab manufactured in a closed environmentally controlled plant. Concrete to develop 5,000 psi in 28 days. The floor slab shall be designed and engineered with pick-up points for possible future relocation. The slab shall be 6" thick concrete with a 6" steel angle around the pick-up points of the slab. The floor finish shall have a non-skid broom finish. After the slab is cured, it will be sealed with a two-part epoxy coating. The minimum rebar size shall be #4 at 12" on center. Anchor bolts shall be 5/8" with 2 x 2 x 3/16 plate washers. The anchor bolts will be embedded in a minimum 4" of concrete. The walls will be installed directly on concrete. Installation of walls on ferrous (Steel) surfaces will not be permitted. Floor drains will be precast into the slab.

B. Foundation shall be manufactured in a closed environmentally controlled plant. Construction shall be 6" thick concrete floor with 4" concrete walls. Concrete to develop 5,000 psi in 28 days. The floor slab shall be designed and engineered with pick-up points for possible future relocation.

C. There will be four (4) weld plates cast into the top of the vault. 4" x ¼" x 6". BMS will provide four (4) 2" x ¼" x 6" weld plates that must be welded onsite by the contractor/owner. This will complete the connection between the floor slab and the foundation/vault.

D. Bidders must have minimum 3 years experience in building these floor systems. The floor system shall be built by a precast company that is currently certified by the National Precast Concrete Association.

II. Wood (Structural wood members to be S.Y.P., S.P.F., or Hem Fir)

A. Wall Framing: Nominal 2 x 4 and 2 x 6 at nominal 16" on center. Walls shall be built in single piece sections for lamination of the FRP interior wall system.

B. Roof Framing: Engineered trusses.

C. Roof Sheathing: 15/32 "CDX" plywood.

III. Thermal and Moisture Protection

A. Roofing Material: Shall be 26 ga. metal roofing with matching trim. Color to be chosen by owner from standard color chart (26 GA/Colorfast 45® Finish). It shall be installed over 30# roof underlayment per manufacturer's recommendations.

B. Fascia: 26 gauge metal "J" trim, color to match metal roof.

C. Soffit: 15/32" ACX plywood, painted to match body color

D. Drip Edge: 3" X 3" 26 gauge metal to match metal roof.

E. Sealants: 100% silicone sealant & latex paintable caulk.

F. Moisture Barrier: 30# felt

G. Vents: Installed in gable ends.

IV. Finishes

A. Restroom Interior: BMS seamless vandal resistant sanitary wall system. Product shall be Kemlite® with Surfaseal®. Fiberglass reinforced plastic wall system, floor to ceiling, corner to corner void of molding and drive rivet fasteners. Will not mildew, rot or rust. Easy to clean, resistant to high moisture and corrosive environment, can be scrubbed or steam cleaned. Graffiti and scratch resistant, color white. 3/32" thick, class A fire rated, pebble grain finish, fiberglass reinforced plastic (FRP) laminated to ACX Plywood.

B. Restroom Ceiling: Ceiling shall be fiberglass reinforced plastic (FRP). Color white.

C. Interior Wall Corner: 1½" x 1½," 93° stainless steel, fastened to wall with stainless steel vandal resistant screws.

D. Base: 4" x ⅛" extruded aluminum 6063-T6, clear anodized finish, with eased top edge, fastened to wall with stainless steel vandal resistant screws.

E. Exterior Siding: Hardi Panel®, cement fiber siding, Sierra pattern. 30 year-limited warranty, will not crack, rot, or burn.

F. Paint and/or staining: Color to be chosen by owner. The contractor/owner will be responsible for on site touch up painting and filling of any holes from the shrink wrap.

G. Corner & Base Trim: Hardi Trim®, color to be chosen by owner. 15 year limited warranty, will not crack, rot or burn.

V. Doors

A. Material: Doors shall be 18 gauge steel, frames shall be16 gauge steel. Frames shall have a wrap around design to cover the exterior and interior wall.

B. Hardware: All hardware shall meet ADA.

1. Closure: LCN146128
2. Deadbolts: Schlage B663
3. Door Lever: Schlage Rhodes D40S
4. Ives Heavy Duty Crash Stop
5. Hagar Hinges: ECBB100
6. Door Sweeps: MM1480A

C. Windows: 12" x 48" 6" Acrylic block, 1½" thick, Glacier Wave, White vinyl frame.

D. Wall Vents: Powder Coated Aluminum. 14" x 16" through the wall intake vent with interior frame and bird and bug screen.

VI. Plumbing

A. Fixtures: H18 fiberglass toilet.

VII. Electrical

A. EMT or MC cable throughout.

B. Underground Sleeve. Schedule 40 grey PVC, by contractor/owner.

C. Panel: Siemens 100amp, with main. (or equal) 120/240 single phase.

D. Chase Outlet: Leviton 20amp GFI.

E. Restroom Lights: CVD232EL with T8 15 watt LED Lamps, polycarbonate lense, and 16 gauge cold rolled steel with corrosion resistant white baked enamel finish.

F. Exterior Lights: RAB WPLED with 13 watt LED Lamps. Fully shielded, full cutoff wall pack. Full cutoff optics with flat tempered glass lens. The bulbs and covers will need to be field installed by contractor/owner.

G. Chase Light(s): RAB VX100DG with 11 watt LED Lamp, vapor tight globe and metal guard, switched.

H. Light Timers: Model STO1C by Intermatic.

VIII. Specialties

A. 18" Grab Bar: 1½" diameter stainless steel with concealed fasteners.

B. 36" Grab Bar: 1½" diameter stainless steel with concealed fasteners.

C. 42" Grab Bar: 1½" diameter stainless steel with concealed fasteners.

D. Toilet paper holders: BMS Model D-H2, ¼" thick stainless steel, exposed roll type with locking device and fastened to wall with stainless steel vandal resistant screws. Owner to supply pad lock.

E. Hand Sanitizers: Stoko Spray Instant Hand Sanitizer.

IX. Waste Reduction System

The system shall be Model WRS Vault Evaporator™ (patent #5,573,661). The WRS system shall include the evaporator unit, vent pipe, roof curb and factory installed spray in 2 part 100% solid polyurethane chemical resistant liner. The contractor/owner will be responsible for 8" PVC connections from the vault evaporator to the vent fan, this will include the installation of the roof curb extension and the vent fan.

Approved Equals

The _____ (AGENCY) shall determine all approved equals. In order to be considered an approved equal the following criteria must be met:

1. Manufacturers Literature: Submit complete manufacturers' literature and technical data.

2. Certification: Submit, via transmittal, properly identified with project name, location and date, certification of manufacturers compliance with the requirements specified herein signed and sealed by a Professional Engineer registered in the State of _____.

3. Submit a complete set of construction drawings signed and sealed by a Professional Engineer registered in the State of _____.

4. Submit (2) two, twelve-inch, samples and specification sheets on the following items; basement materials, roof decking, laminated beams, fascia, interior finish, and exterior siding. Note: Materials must meet specifications.

5. Provide (3) three location and contacts of similar buildings of this nature, built within the last six months.

6. All equals must be approved (10) ten days before the bid date.

7. All approved equals shall be notified with written statements of their approval. Manufacturers shall not bid this project without this written notification.

Product Insurance

1. Manufacturer to provide minimum $2,000,000 PRODUCT/COMPLETED OPERATIONS coverage.

2. Carrier providing the coverage is rated BEST'S rating A or higher.

3. PRODUCT/COMPLETED OPERATIONS is an "occurrence" form basis.

4. Insurance certificate stating insurance coverage and compliance with the above requirements shall be submitted.

 All Rights Reserved

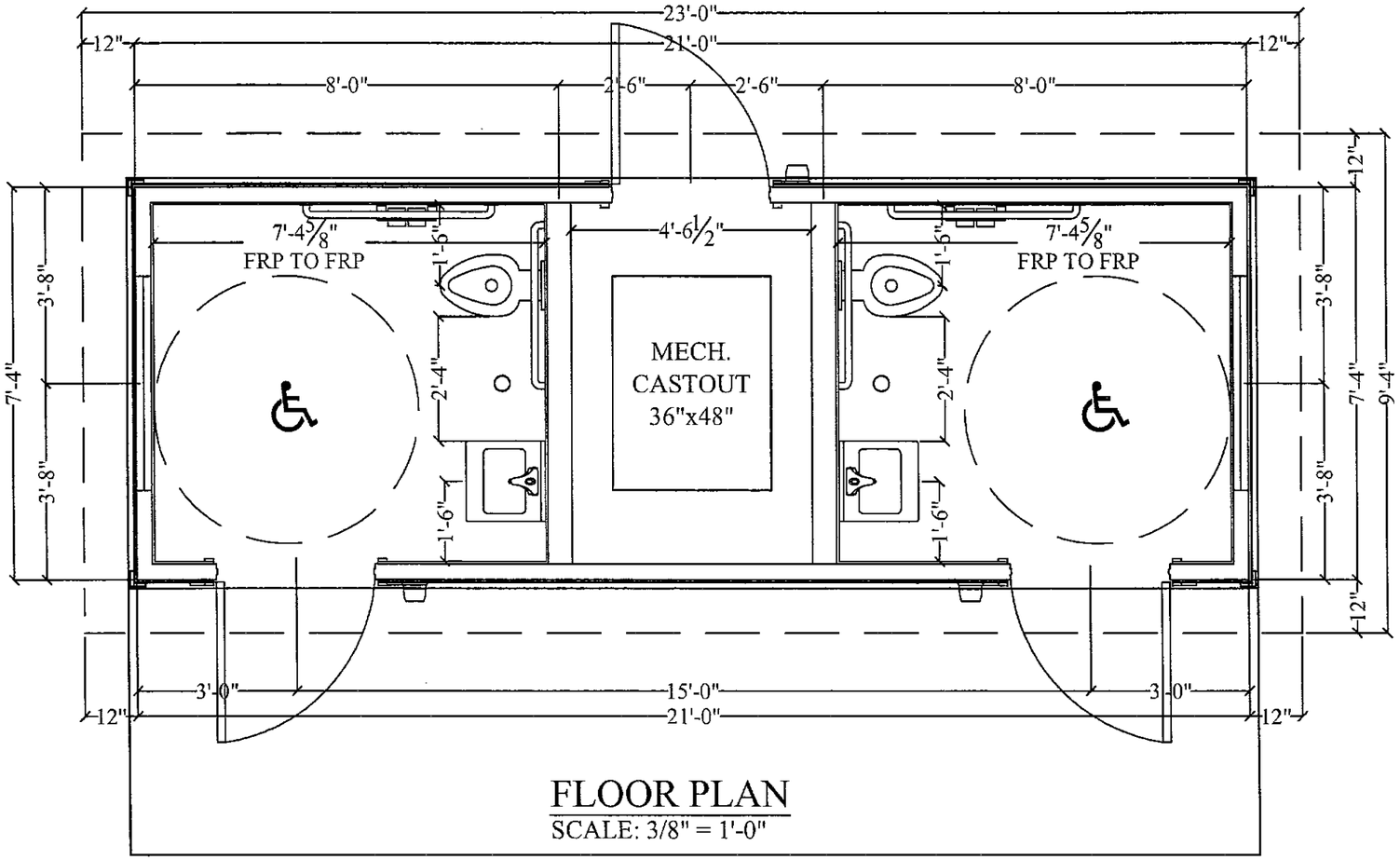

FLOOR PLAN
SCALE: 3/8" = 1'-0"

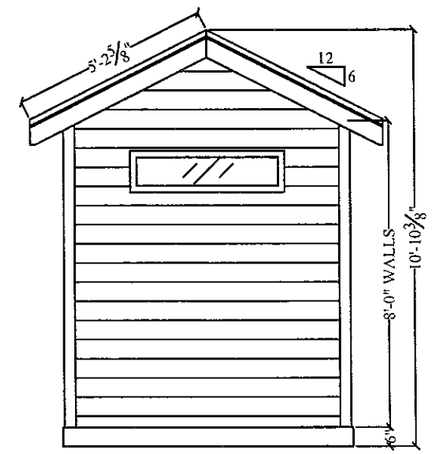

R. SIDE ELEVATION
SCALE: 3/16" = 1'-0"

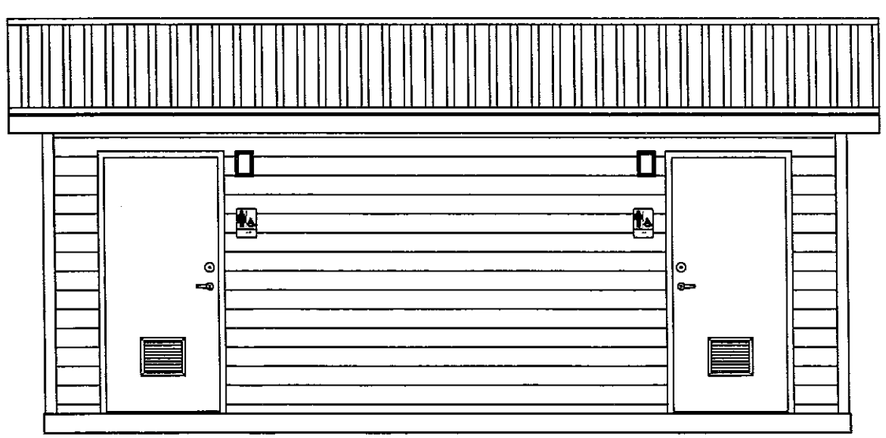

FRONT ELEVATION
SCALE: 3/16" = 1'-0"

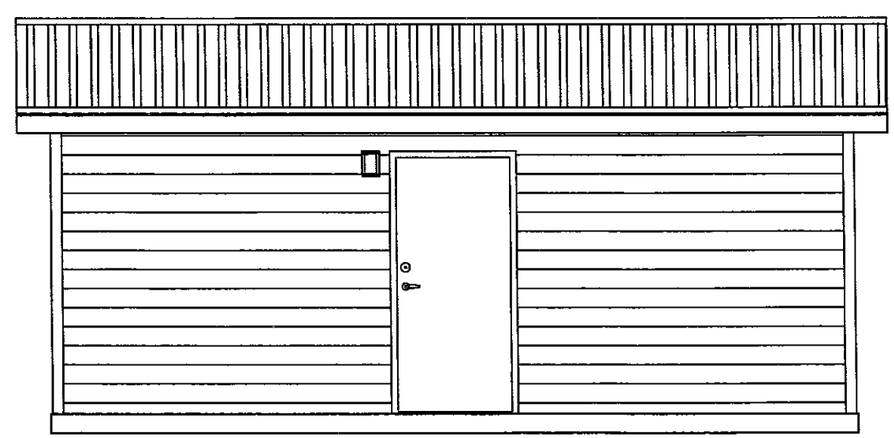

REAR ELEVATION
SCALE: 3/16" = 1'-0"

BIOLOGICAL MEDIATION SYSTEMS, L.L.C.
NATIONAL VALUE ENGINEERED STRUCTURES
1-800-524-1097
BMS

DATE
1/7/13

THIS PRINT IS THE PROPERTY OF BIOLOGICAL MEDIATION SYSTEMS, L.L.C. AND IS NOT TO BE USED, COPIED OR, REPRODUCED WITHOUT EXPRESSED WRITTEN PERMISSION. THIS INFORMATION IS CONFIDENTIAL AND PROPRIETARY TO BMS, L.L.C. AND IS NOT TO BE REVEALED OR DISTRIBUTED TO OTHERS WITHOUT THE WRITTEN PERMISSION OF BMS, L.L.C. OR BE USED IN MANNER NOT SPECIFIED BY BMS, L.L.C.

*** IMPORTANT ***

NOTE: IT IS THE RESPONSIBILITY OF THE OWNER TO VERIFY THAT THESE PLANS MEET OR EXCEED ALL GOVERNING CODES. IT IS ALSO THE RESPONSIBILITY OF THE OWNER TO OBTAIN PLAN APPROVALS AND ALL WORK PERMITS BY GOVERNING AGENCIES

BMS MODEL R4 218 FLUSH FACILITY

Kelsie Sasabe

From: veronica wagner <veronica@bmsprefab.com>
Sent: Monday, April 13, 2020 5:36 AM
To: Kelsie Sasabe
Subject: RE: Prefabricated Public Restrooms - Request for Information

Hi Kelsie,

We no longer offer the DEVAP system. The unisex facility would run about $60,000.00 and the two hole facility would run about $100,000.00 without freight and depending on what aesthetics you are looking for. I am looking into what BMS needs to do about building in Hawaii as we have never done projects there.

Let me know if you have any questions.

Thank you

Veronica Wagner
Project Coordinator | **Biological Mediation Systems, LLC**
T: 800.524.1097 | C: 970.290.9368
veronica@bmsprefab.com
Visit us online: **Facebook** | **Twitter** | **Instagram** | **YouTube** | **LinkedIn**

Biological Mediation Systems, LLC Proprietary Information and Liability Notices

This e-mail and any attached documents may contain confidential or proprietary information. If you are not the intended recipient, please advise the sender immediately and delete this e-mail and all attached documents from your computer system. Any unauthorized disclosure, distribution or copying hereof is prohibited.

From: Kelsie Sasabe <ksasabe@bowengineering.com>
Sent: Friday, April 10, 2020 12:17 PM
To: veronica wagner <veronica@bmsprefab.com>
Cc: William Bow <WBow@bowengineering.com>; Emi Tanitomi <etanitomi@bowengineering.com>
Subject: FW: Prefabricated Public Restrooms - Request for Information

Hi Veronica,

Thanks again for returning my call earlier. Bow Engineering is working on a feasibility study for a comfort station at Milolii Beach Park out on the Big Island of Hawaii. The existing facility has a total of 4 toilets and 2 sinks and is currently connected to a septic system. As a part of the report, we are looking at various options to present to the County as the location is more remote and we are not able to connect to a main sewer system. As I mentioned on the phone, my coworker was in communication with Glenn a couple of years ago (see emails below) for a similar feasibility study. I was wondering if you could provide an updated cost for the WRS and DEVAP models similar to what was provided below? Any updated information would be greatly appreciated. Let me know if you have any questions.

Thanks!

ATTACHMENT 5

ANUA BIOCOIR COCONUT FIBER BIOFILTER

BioCoir®

Coconut Fiber Biofilter

BioCoir is a modular system for residential and commercial applications. BioCoir is prepackaged in a pod housing featuring natural media. BioCoir protects sensitive watersheds through removal of nitrogen and other constituents.

ANUA

BioCoir

BioCoir utilizes coconut fiber (coir) media housed in an engineered pod. Coir are the fibers that constitute the thick mesocarp, or husk, of the coconut fruit. Coconut fiber is low-cost and a renewable resource. The short-to-medium length fibers are a lingo cellulosic material and by-product of coconut harvesting in many developing nations. The high lignin content of these fibers results in a durable material. Pretreated effluent is sprayed over the media using specially designed helical spray nozzles that provide uniform distribution over the entire surface area within the pod. Treated effluent is recirculated through the media multiple times, which optimizes treatment.

Why Choose BioCoir?

- Produces high quality effluent
- Certified to NSF/ANSI Standards 40 and 3rd party nitrogen reduction >50%
- Proven results for over 15 years
- Spray nozzles maximize effluent distribution over coir media surface
- Simple to use and suitable for wide range of applications
- Prepackaged, lightweight pod for easy installation
- 80%/20% split pods simplify design and installation
- No gravity recirculation valve needed
- Natural media:
  - Allows free air flow and water movement
  - Provides large, open surface area
  - Renewable and sustainable
  - Low cost and easy to ship

Applications

Residential

Commercial or community

Intermittent or seasonal use

Space constrained sites

All climate conditions

Nitrogen sensitive areas

Only pods bearing the NSF® mark are certified to NSF/ANSI Standard 40, Class I

ANUA

©2020 Anua 2-2020

336.547.9338 ■ anuainternational.com

BioCoir®

Coconut Fiber Biofilter

1. Collection

Sewage flows from the home or facility into a watertight primary tank or chamber. The solids settle and the liquid effluent flows by gravity through an effluent filter to the system.

2. Treatment

The BioCoir Recirculating Media Filter provides biochemical treatment through passive biofiltration principles. The coconut fiber (coir) is uniform and provides ample surface area for biological growth. The media contains many voids to accommodate optimum air flow and water flow. Pretreated effluent is sprayed over the coconut fiber media using specially designed helical spray nozzles that provides even distribution over the entire surface area within the pod. Treated effluent is recirculated multiple times which optimizes treatment.

3. Dispersal

The highly treated effluent exits the 20% side of the pod and flows into a gravity drainfield or into a pump chamber for dosing LPP, drip irrigation, or other pressurized drainfields.

Treatment Performance

Parameters	Typical Values
BOD_5	≤10 to ≤30 mg/l
TSS	≤10 to ≤30 mg/l
Total Nitrogen	≤20 mg/l

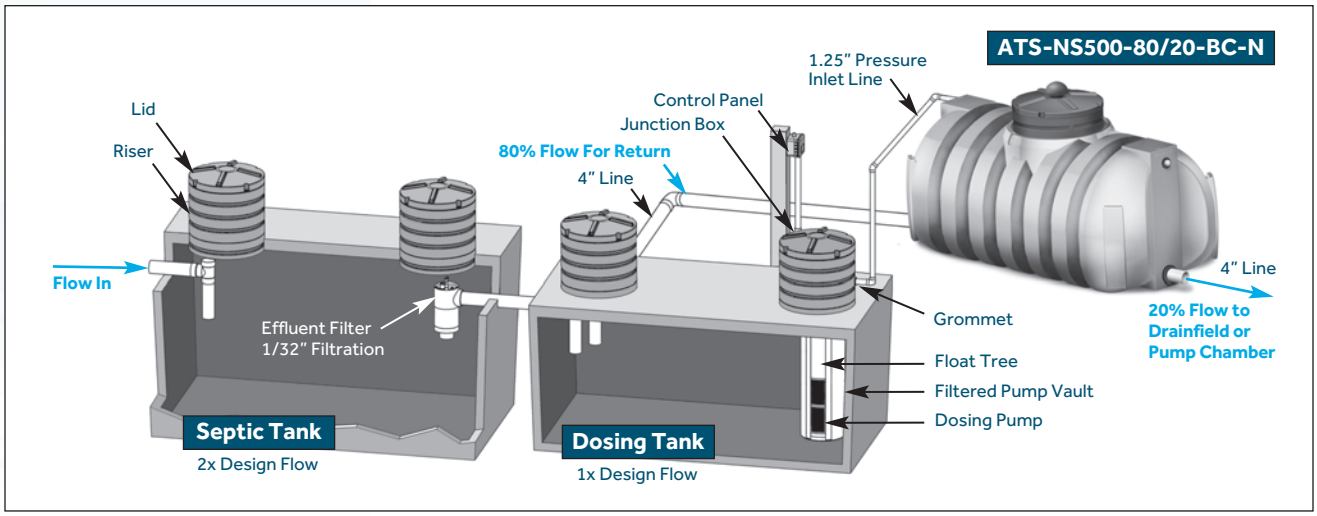

ANUA

NS Models

Model Number	Design Flow (GPD)
ATS-NS500-BC-N	500
ATS-NS750-BC-N	660
ATS-NS1000-BC-N	800
ATS-NS500-80/20-BC-N	500
ATS-NS750-80/20-BC-N	660
ATS-NS1000-80/20-BC-N	800
ATS-NS500-2-80/20-BC-N	1000
ATS-NS500-3-80/20-BC-N	1500
ATS-NS750-2-80/20-BC-N	1320

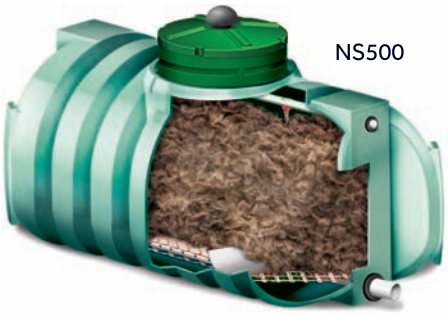

NS500

NS750

NS1000

Pre-assembled Pod

- Flexible configurations
- Multiple sizes available
- Lightweight pods
- Synthetic media
- Unique 80%/20% effluent splitting
- No gravity recirculation valve needed

ANUA

Only pods bearing the NSF® mark are certified to NSF/ANSI Standard 40, Class I

©2020 Anua 2-2020

ANUA

Quanics

MILOLI'I BEACH PARK IWS IMPROVEMENTS
BIG ISLAND, HI

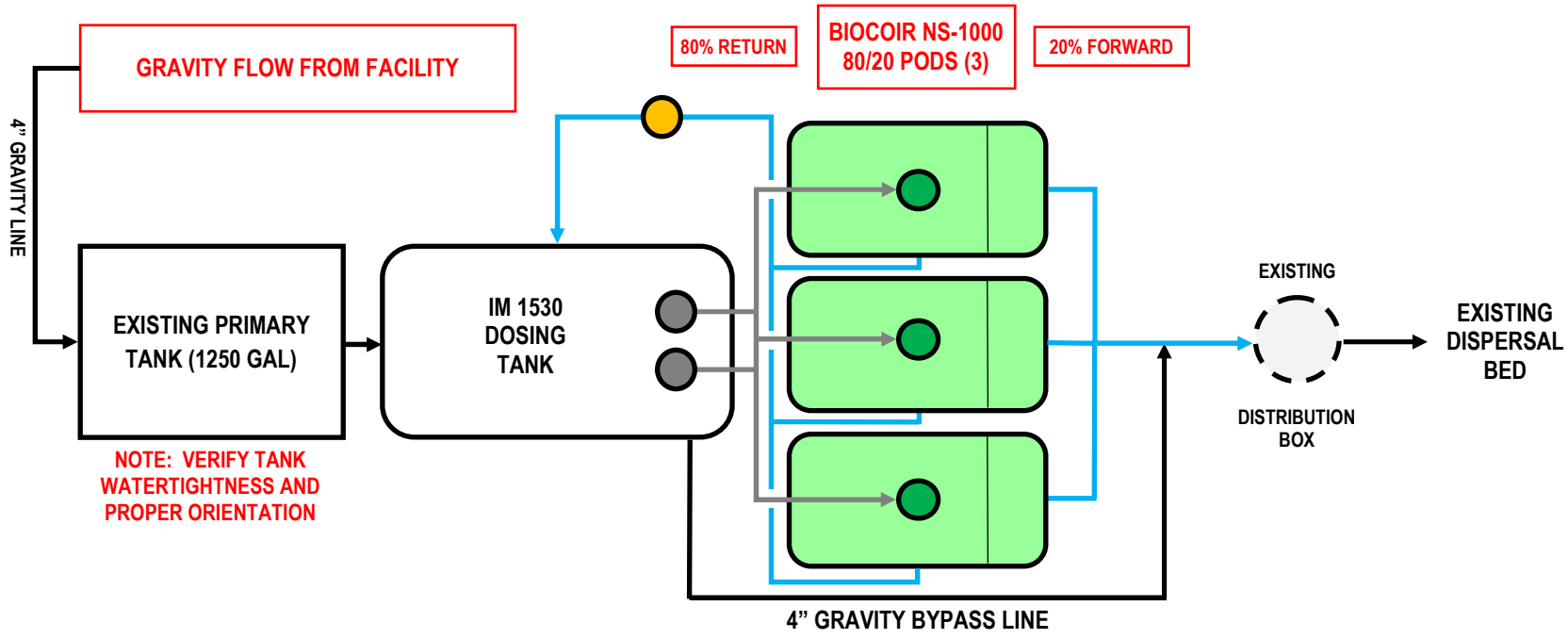

LEGEND

- TIMED DOSE BIOCOIR PUMP
- 26" DIAMETER PURALINITY BASIN

INFLUENT:
HYDRAULIC—1,250 GPD AVERAGE; 2,500 GPD PEAK
ORGANIC—200 MG/L BOD; 200 MG/L TSS

Kelsie Sasabe

From: Mike Fugate <mike.fugate@anuainternational.com>
Sent: Wednesday, April 8, 2020 2:49 PM
To: Kelsie Sasabe; William Bow; Emi Tanitomi
Subject: Re: Miloli'i IWS improvements
Attachments: Anua_CWC_Schematic_Biocoir_1250_Avg_2500_Peak_HI_Milolii_040120.pdf

Hi Kelsie,

Finally....sorry for the couple extra days. Shipping estimates ended up being a huge challenge.

Attached is the flow diagram I promised. Basically we didn't add much pretreatment tankage....just the 1500 gallon tank (labeled IM 1530) which also serves as a dosing tank. The three Biocoir (coconut husk) pods are adequately sized for the peak flows you are concerned about. So the operation is set up to return 80% of the flow from the pods back to the dosing tank for recirculation so that once it gets to the field, it's been through multiple stages of treatment. As total capacity in the pretreatment tanks is marginal here, we suggest a high water gravity bypass line that will skip the Biocoir pods and run straight to the field. I don't expect the situation to occur often but it's cheap insurance against a short lived hydraulic overload. Lastly, we propose an alkalinity basin on the recirculation line as we anticipate the wastestream from the bathrooms to be high in ammonia. The basin media will restore proper pH levels to the stream so optimal biological treatment can occur. It appears that available area is a premium at the site so for reference the footprint of the 1500 gallon tank is about 5' x 15' and that of each Biocoir pod is 5' x 11'.

I decided not to follow through with the Puraflo peat biofilter option because (1) it would require many more containers thus more footprint than Biocoir and (2) the shipping costs simply made it impractical. Shipping costs would've been significantly more than the equipment itself with this option.

Total project equipment cost (equipment + oversight) is $21,649.84. This includes the dosing tank and the entire pumping package, the preassembled Biocoir pods, and the alkalinity basin. Like I mentioned above, finding affordable shipping was a great challenge. The best shipping cost we could attain is $13,380.00.

Please let me know your thoughts Kelsie. I'll be glad to answer any additional questions from your team as well.

Thanks,
Mike

On Fri, Apr 3, 2020 at 8:50 PM Kelsie Sasabe <ksasabe@bowengineering.com> wrote:

> Hi Mike,
>
> It was nice talking with you too! And no problem, next week is fine. Thanks again and have a good weekend too!
>
> *Kelsie Sasabe*
>
> *Design Engineer*

ATTACHMENT 6

BIOBARRIER HIGH STRENGTH MEMBRANE BIOREACTOR (HSMBR)

BIO MICROBICS®

Established in 1996 to focus on water ecology and technology innovation through three companies, BioMicrobics, SeptiTech, and Scienco/FAST. At the forefront of sustainable design and with more than 80,000 installed systems in over 80 countries, these systems meet the highest performance standards for treatment of water, greywater, wastewater, stormwater, and more! BioMicrobics has developed a number of innovative products dealing with the treatment of water – where infrastructure and drainage are not available. Our systems are designed and engineered with sustainability and user practicality in mind.

BioBarrier® MEMBRANE BIOREACTOR

Single-Family & Residential Systems

The BioBarrier® MBR is NSF/ANSI Standard 40 (Class 1), 245 for Nitrogen reduction, and 350 for Water Reuse (the first to receive this distinction!), as well EN12566-3 certified to provide new construction and renovation/repair projects in "water-constrained areas" with new opportunities for water recycling.

BioBarrier® MEMBRANE BIOREACTOR / BioBarrier® HSMBR® HIGH STRENGTH MEMBRANE BIOREACTOR

Small & Large Commercial Systems

These advanced Membrane BioReactor (MBR) and High-Strength Membrane Bioreactor (HSMBR®) systems are designed specifically treat all the wastewater (blackwater and greywater) generated from small to larger property applications that far exceed effluent requirements.

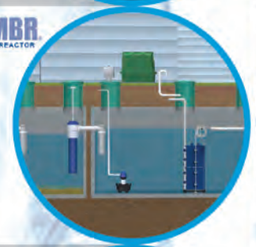

BioBarrier® HSMBR® HIGH STRENGTH MEMBRANE BIOREACTOR

Multi-Family & Community Systems

There are a lot of factors, from the type of wastewater generated to the amount of flow expected and geographical terrain situations are taken into consideration. BioBarrier® HSMBR® systems can be applied to large office buildings, wineries and food processing factories, among other enterprises.

Often, BioMicrobics Systems are installed in below ground, locally-sourced tanks.

"We selected the BioBarrier® MBR based on its competitive cost & projected effluent quality, including our particular need to bring total nitrogen to below drinking water standards in the effluent."
–Dr. James Englehardt, UM, Chief Investigator for NET-ZERO Water Dorm

INNOVATIVE ONSITE WASTEWATER PRODUCTS

BIO MICROBICS®
BETTER WATER. BETTER WORLD.™
16002 West 110th St. • Lenexa, KS 66219 USA
1-800-753-3278 • ph: 1-913-422-0707 • f: 1-913-422-0808
www.biomicrobics.com • sales@biomicrobics.com

SeptiTech®
a subsidiary of BioMicrobics, Inc.
69 Holland Street • Lewiston, ME 04240 USA
1-800-318-7967 • ph: 1-207-333-6940 • f: 1-207-333-6944
www.septitech.com • info@septitech.com

SCIENCO/FAST®
a subsidiary of BioMicrobics, Inc.
12977 Maurer Indust'l Dr • Sunset Hills, MO 63127 USA
1-800-652-4539 • ph: 1-314-756-9300 • f: 1-314-756-9306
www.sciencofast.com • solutions@sciencofast.com

© 2019 BioMicrobics Inc. All Rights Reserved. All tradenames and logos are registered trademarks of BioMicrobics Inc. or used under license. Certification/Award marks are registered by their respective owners.

www.biomicrobics.com

BioBarrier® MEMBRANE BIOREACTOR

Advanced Wastewater Treatment with Ultrafiltration Processes

NSF/ANSI 350 Certified for Water Reuse

Reliable, Proven, Long-Term Performance with Low Maintenance

AWARD-WINNING INTEGRATED WATER TECHNOLOGY

INDUSTRY LEADING WATER RECYCLING TECHNOLOGY
RESIDENTIAL • COMMERCIAL • COMMUNITY

BETTER WATER. BETTER WORLD.™

www.biomicrobics.com

BioBarrier®
MEMBRANE BIOREACTOR

The rise in demand for sustainable technologies to the world's water needs, green-building incentives, changes in regulations, water shortages, and the rising cost of water have all become principal drivers towards sustainable solutions. MBR module systems replace the traditional clarifier, sand filter and disinfection processes used in most conventional wastewater treatment processes by removing the total suspended solids with UF/MF (ultrafiltration/ microfiltration) membranes.

While conventional treatment processes focus on the degradation of the waste and nutrients (i.e. Nitrogen and Phosphorous), the membranes physically separate much smaller microorganisms and contaminants that create turbidity. The membrane modules are submerged in a biological tank or side streams tank, with the water being drawn through the membranes under vacuum, leaving the suspended biomass material in the biological aeration tank. The MBR systems produce consistent effluent quality even in varying influent conditions

Install BioBarrier® MBRs directly in locally-sourced, water-tight tanks; the above ground blower can be installed up to 100 ft [30.5 m] away!

Engineered to fit most residential (small to large) and commercial applications, the BioBarrier treats the water to 99.9% clean of contaminants. These pre-engineered, package plants utilizing the MBR technology will achieve better treatment and is by far the most effective for removing pollutants from the wastewater.

- BioBarrier® HSMBR® (High Strength Membrane BioReactors) larger commercial (restaurants, hotels/resorts, wineries, breweries, and other specialty applications) systems to achieve higher water quality standards.
- BioBarrier® GWMBR™ (Grey-Water Only) treatment and reuse for greywater sources (i.e. sinks, showers, washing machines, and other non-blackwater sources).
- BioBarrier® MarineMBR™ is ideal for total blackwater/greywater sources and water reuse onboard boats, ships, workboats, yachts, ferries, and more!

HOW IT WORKS!

1. In the primary settling zone, a SaniTEE® device is used to prevent large solids from entering the treatment zone.
2. A remote, above-ground blower introduces air (oxygen) into the treatment module to facilitate a robust circulation and aeration of wastewater.
3. Once inside the treatment tank, suspended treatment occurs. Optional LIXOR® System can be used for extra aeration for higher than normal BOD concentrations.
4. Immersed in the treatment tank, the BioBarrier® module(s) and air grid(s) create an upward flow between membrane plates providing vigorous scouring action.
5. Water passes through the membranes for microfiltration and ultrafiltration processes.
6. Clear, odorless, treated water exits the system.

BioBarrier MEMBRANE BIOREACTOR

See also -N (higher Total Nitrogen Reduction) versions are available. Consult factory for more information.

NSF/ANSI Standard 40 class 1, 245 (nitrogen reduction), 350 class R (water reuse) certified systems establish material, design, construction and performance requirements wastewater treatment systems:

*Class R Single-family residential dwellings,

*Class C Multi-family units & commercial facilities

EN-12566-3 Packaged wastewater treatment plants for up to 50 people, tested conform the EU Norm by PIA with the percentage reduction of influent pollutants. During the 38-week documented test performance of the following levels were acheived: COD reduction 97.2%, BOD reduction 98.9%, Suspended Solids reduction 99.8%, NH4-N reduction 96.2%, fecal coliforms 99.9%.

UNIT	MAXIMUM TREATMENT CAPACITY* Volume/Module	~People: USA	International
0.5 (-N)	500 GPD (1800 LPD)	1 - 8	1 - 10
1.0 (-N)	1000 GPD (3400 LPD)	1 - 16	1 - 20
1.5 (-N)	1500 GPD (5500 LPD)	6 - 24	10-30

Note: MBR module capacities are best rated based on biological oxygen demand (BOD), hydraulic and other project-specific considerations. Actual capacity may vary with local conditions and performance goals.

BioBarrier MEMBRANE BIOREACTOR / BioBarrier HSMBR HIGH STRENGTH MEMBRANE BIOREACTOR

See also -N (higher Total Nitrogen Reduction) versions are available. Consult factory for more information.

UNIT	MAXIMUM TREATMENT CAPACITY*	
2.0 (-N)	2000 GPD (7.5 m^3/D)	Consult Factory
2.5 (-N)	2500 GPD (9.4 m^3/D)	Consult Factory
3.0 (-N)	3000 GPD (11.3 m^3/D)	Consult Factory
HSMBR® 1.5 (-N)	1500 GPD (5.5 m^3/D)	Consult Factory
HSMBR® 3.0 (-N)	3000 GPD (11.3 m^3/D)	Consult Factory
HSMBR® 4.5 (-N)	4500 GPD (17 m^3/D)	Consult Factory
HSMBR® 6.0 (-N)	6000 GPD (22.7 m^3/D)	Consult Factory
HSMBR® 9.0 (-N)	9000 GPD (34 m^3/D)	Consult Factory

For additional flows larger than 9000 GPD [34 m^3/D] or unusual applications requiring other treatment levels, please consult factory.

*Treatment capacity: As a "guideline" for suggested use, the individual MBR module capacities are rated based on biological oxygen demand (BOD), hydraulic load and other project-specific considerations. Only residential domestic strength applications may be designed as total number of people per module. Actual capacity may vary with local requirements, conditions and performance goals.

Electrical Options: Electrical components are available to meet all worldwide electrical specifications (volt/phase/frequency). See product drawing(s) for options and more information.

BioBarrier MEMBRANE BIOREACTOR — SUMMARY OF AVERAGE INFLUENT AND EFFLUENT OF THE MBR BIOBARRIER 0.5 SYSTEM

Parameters	Influent	Effluent
Flow, gpd	455	455
BOD, mg/L	200	<5
TSS, mg/L	180	<2
COD, mg/L	480	16
TKN, mg/L	61	1.4
Total Nitrogen, mg/L	61	5.5
Q-NH_3, mg/L	4.2	0.5
Liquid Temperature, °C	7 - 31	8 - 31
No. of days in Operation	375	375

For the initial (start-up) mixed liquor suspended solids (MLSS) concentration of the system was less than 300 mg/L, the MLSS concentration allowed building up to as high as 12,000 mg/L, before the sludge was wasted from the system. It took about eight (8) months before sludge wasting was required.

Nearly 95% of the sludge was wasted; the remaining 5% of solids was used as microbial seed for the biological process.

BioMicrobics wastewater & greywater treatment systems are award-winning "integrated water strategy" for the rural/ urban environment. As a popular alternative to onsite septic systems, the technologies are tested and certified by 3rd-party programs. The systems allow long-term operational performance with easy and low-cost maintenance.

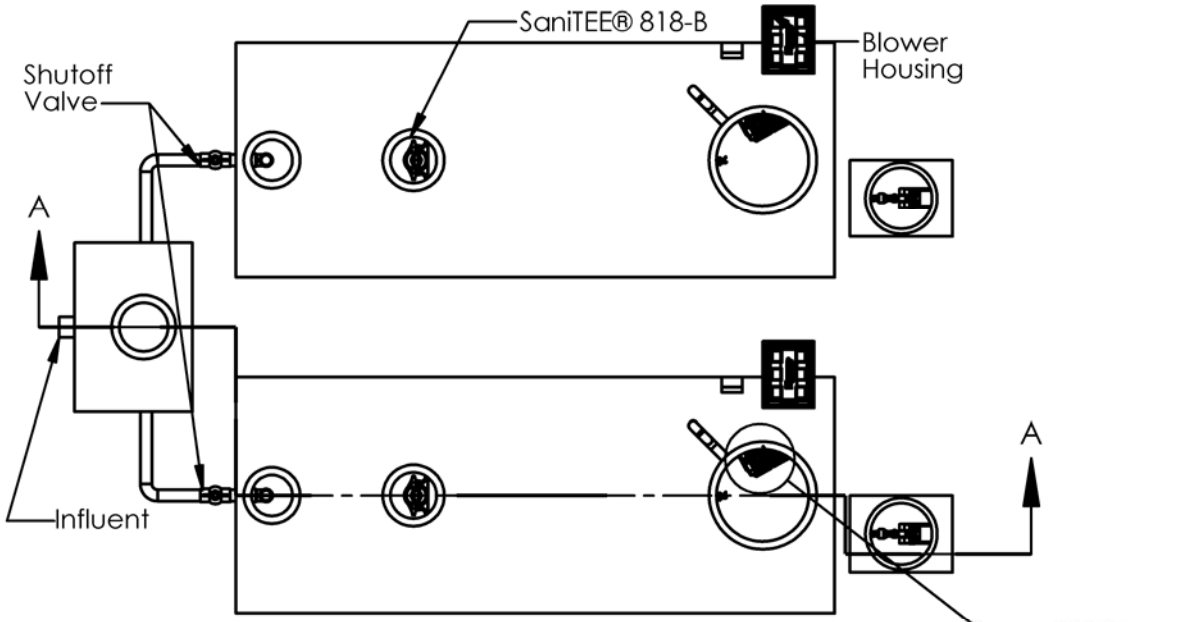

NOTES

1. Blower piping to BioBarrier® HSMBR® may not exceed 40 FT [12 m] total length and use 4 elbows maximum per train. For distances greater than 40 FT [12 m] - consult factory. Blowers must be located above flood/standing water levels on concrete bases 42" X 28" X2" [105 X 70 X 5cm] minimum.
2. Run vent(s) to desired location above finish grade and cover opening(s) with vent grate(s) w/at least a total of 8 sq in. [53 sq. cm] of total open surface area. Secure with stainless steel screws. Vent piping must not allow excess moisture build up or back pressure.
3. All appurtenances to BioBarrier® (e.g. tank pump outs, etc.) must conform to all country, state, province, and local plumbing and electrical codes.
4. The BioBarrier® HSMBR® control systems are provided by Bio-Microbics, Inc.
5. The primary compartments may be a separate tank.
6. The baffle separating the settling and the treatment chambers shall be sealed to the top of the tank, as shown on the drawing. Ventilation for the settling zone shall be provided for in the same manner as a traditional septic tank.
7. All inspection, viewing, access, and pump out ports must be secured, to prevent accidental or unauthorized access.
8. Tank, anchors, piping, conduit, blower housing pads and vents are provided by others.
9. All piping and ancillary equipment installed after BioBarrier® HSMBR® , must not impede or restrict filtrate pump.
10. BioBarrier® HSMBR® assemblies must be secured to the tanks to prevent movement or floatation(see Installation Instructions for details).
11. Distribution box must balance flow to both trains.
12. Filtrate pump vault must remain dry.

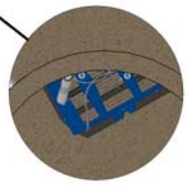

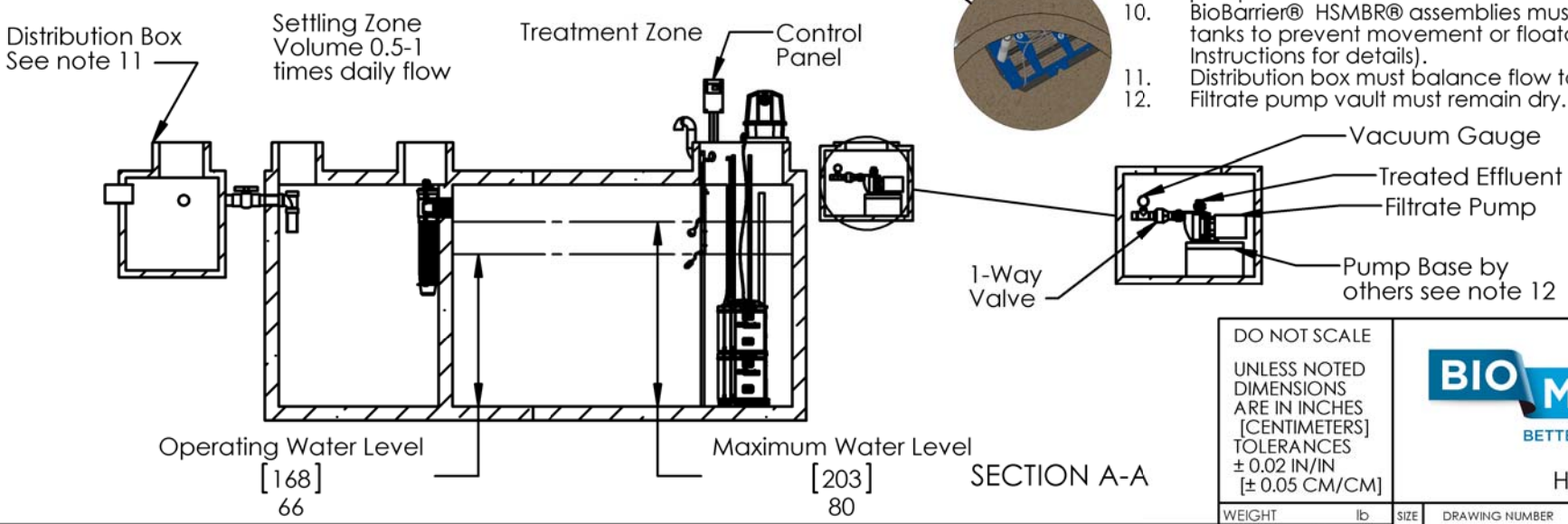

SECTION A-A

DO NOT SCALE

UNLESS NOTED DIMENSIONS ARE IN INCHES [CENTIMETERS] TOLERANCES ± 0.02 IN/IN [± 0.05 CM/CM]

BIO MICROBICS
BETTER WATER. BETTER WORLD.

HSMBR 1.5

WEIGHT	lb	SIZE	DRAWING NUMBER	
NAME	DATE	A	HSMBR® 1.5-D	SHEET 1 OF 6
DRAWN CTC	11/25/2009			
CHECKED PF	1/26/2016	REVISED 1/26/2016	REV. INI-05-P	

THE INFORMATION CONTAINED IN THIS DRAWING IS THE SOLE PROPERTY OF BIO-MICROBICS INC. ANY REPRODUCTION IN PART OR AS A WHOLE WITHOUT THE WRITTEN PERMISSION OF BIO-MICROBICS INC. IS PROHIBITED. DESIGN AND INVENTION RIGHTS ARE RESERVED. IN THE INTEREST OF TECHNOLOGICAL ADVANCEMENT, ALL PRODUCTS ARE SUBJECT TO DESIGN AND OR MATERIAL CHANGE WITHOUT NOTICE.

BIO-MICROBICS © 2016

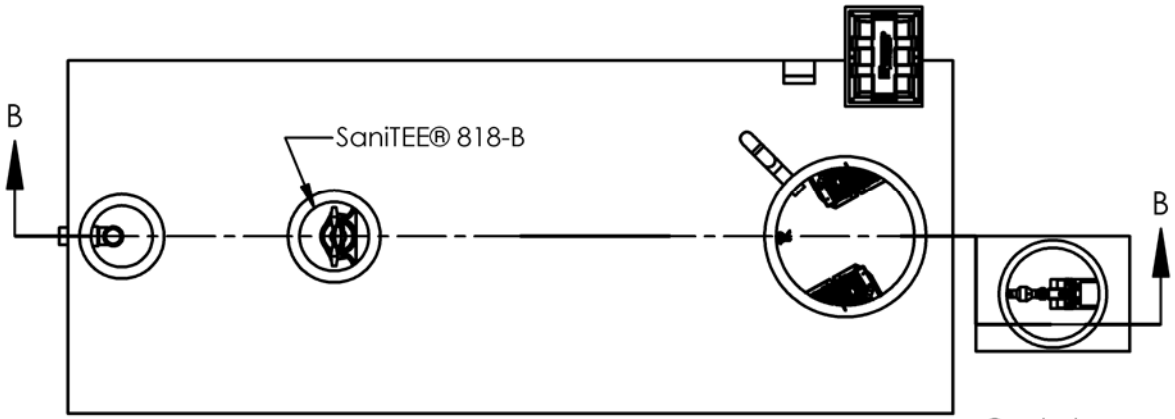

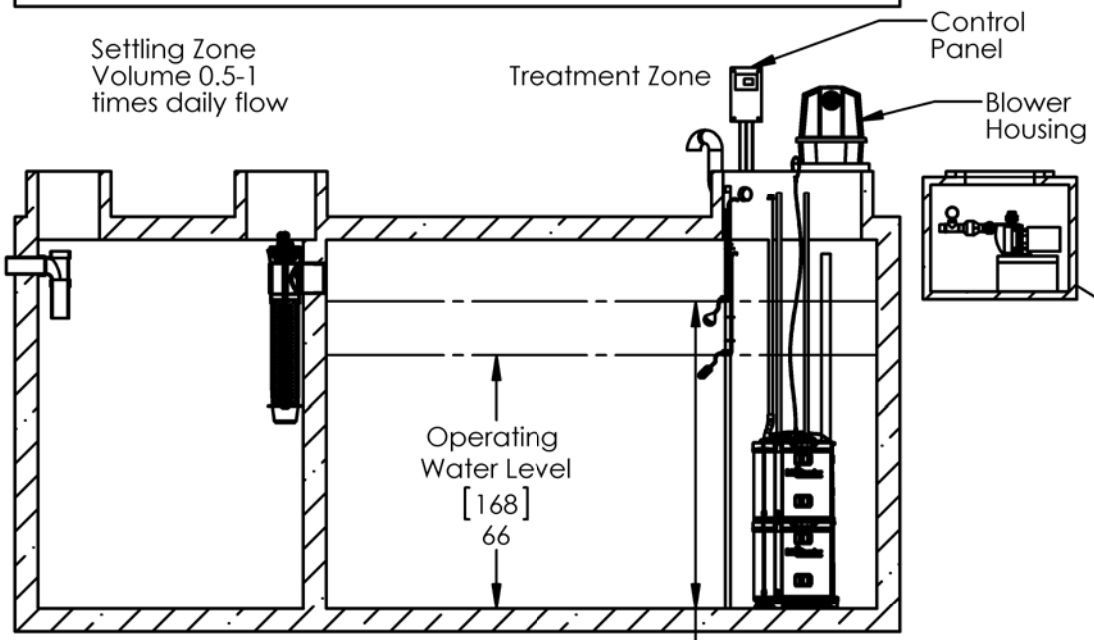

SECTION B-B

NOTES

1. Blower piping to BioBarrier® HSMBR® may not exceed 40 FT [12 m] total length and use 4 elbows maximum per train. For distances greater than 40 FT [12 m] - consult factory. Blowers must be located above flood/standing water levels on concrete bases 42" X 28" X2" [105 X 70 X 5cm] minimum.
2. Run vent(s) to desired location above finish grade and cover opening(s) with vent grate(s) w/at least 8 sq in. [53 sq. cm] of total open surface area. Secure with stainless steel screws. Vent piping must not allow excess moisture build up or back pressure.
3. All appurtenances to BioBarrier® (e.g. tank pump outs, etc.) must conform to all country, state, province, and local plumbing and electrical codes.
4. The BioBarrier® HSMBR® control systems are provided by Bio-Microbics, Inc.
5. The primary compartments may be a separate tank.
6. The baffle separating the settling and the treatment chambers shall be sealed to the top of the tank, as shown on the drawing. Ventilation for the settling zone shall be provided for in the same manner as a traditional septic tank.
7. All inspection, viewing, access, and pump out ports must be secured, to prevent accidental or unauthorized access.
8. Tank, anchors, piping, conduit, blower housing pads and vents are provided by others.
9. All piping and ancillary equipment installed after BioBarrier® HSMBR® , must not impede or restrict filtrate pump.
10. BioBarrier® HSMBR® assemblies must be secured to the tanks to prevent movement or floatation(see Installation Instructions for details).
11. Filtrate pump vault must remain dry.

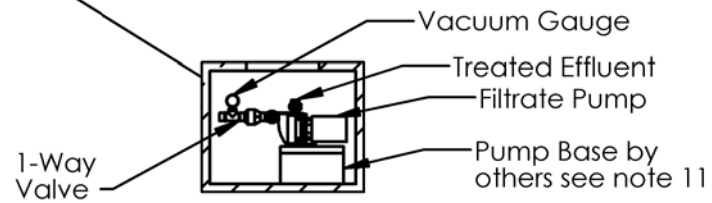

DO NOT SCALE

UNLESS NOTED DIMENSIONS ARE IN INCHES [CENTIMETERS] TOLERANCES ± 0.02 IN/IN [± 0.05 CM/CM]

BIO MICROBICS
BETTER WATER. BETTER WORLD.

HSMBR 1.5

WEIGHT	lb	SIZE	DRAWING NUMBER	
NAME	DATE	A	HSMBR® 1.5-S	SHEET 2 OF 6
DRAWN CTC	11/25/2009			
CHECKED PF	1/26/2016	REVISED 1/26/2016	REV. INI-06-D	

THE INFORMATION CONTAINED IN THIS DRAWING IS THE SOLE PROPERTY OF BIO-MICROBICS INC. ANY REPRODUCTION IN PART OR AS A WHOLE WITHOUT THE WRITTEN PERMISSION OF BIO-MICROBICS INC. IS PROHIBITED. DESIGN AND INVENTION RIGHTS ARE RESERVED. IN THE INTEREST OF TECHNOLOGICAL ADVANCEMENT, ALL PRODUCTS ARE SUBJECT TO DESIGN AND OR MATERIAL CHANGE WITHOUT NOTICE.

BIO-MICROBICS © 2016

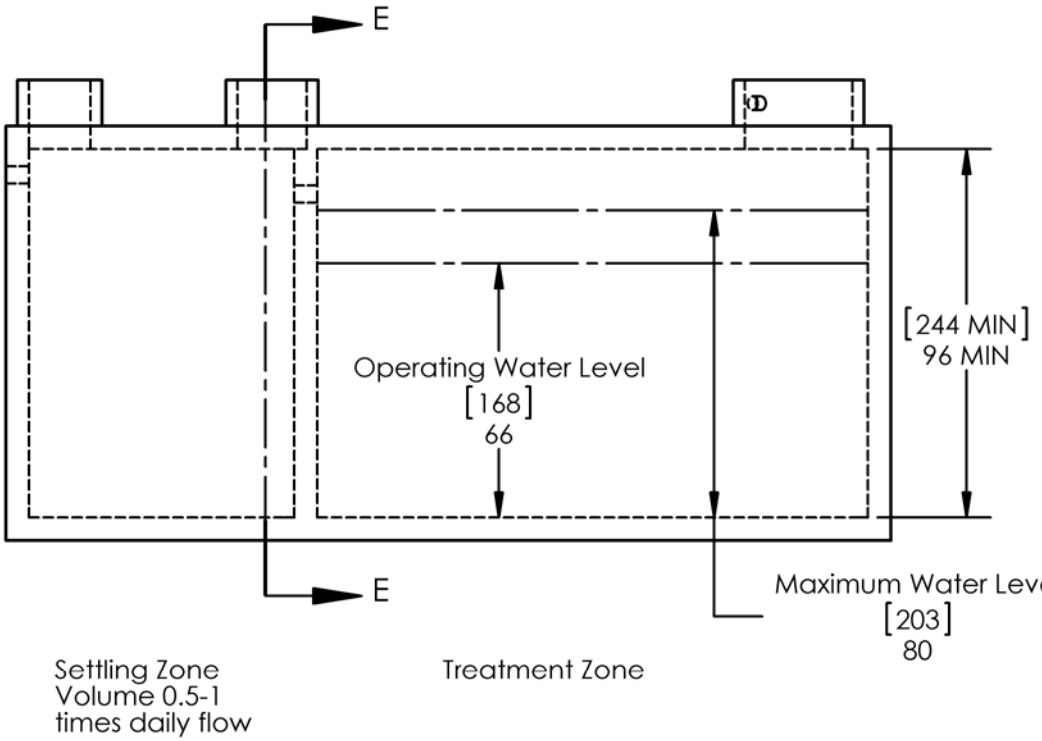

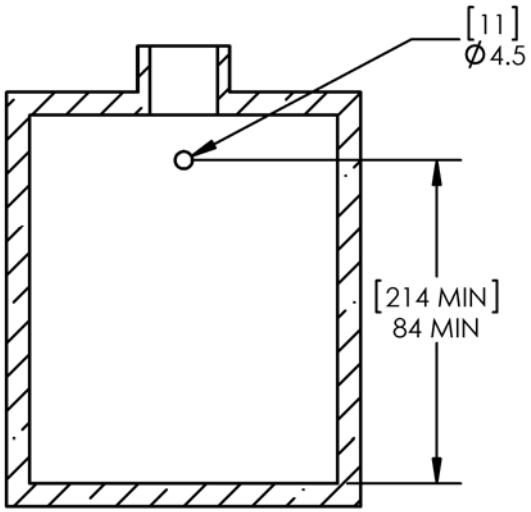

SECTION E-E
SCALE 1 : 50

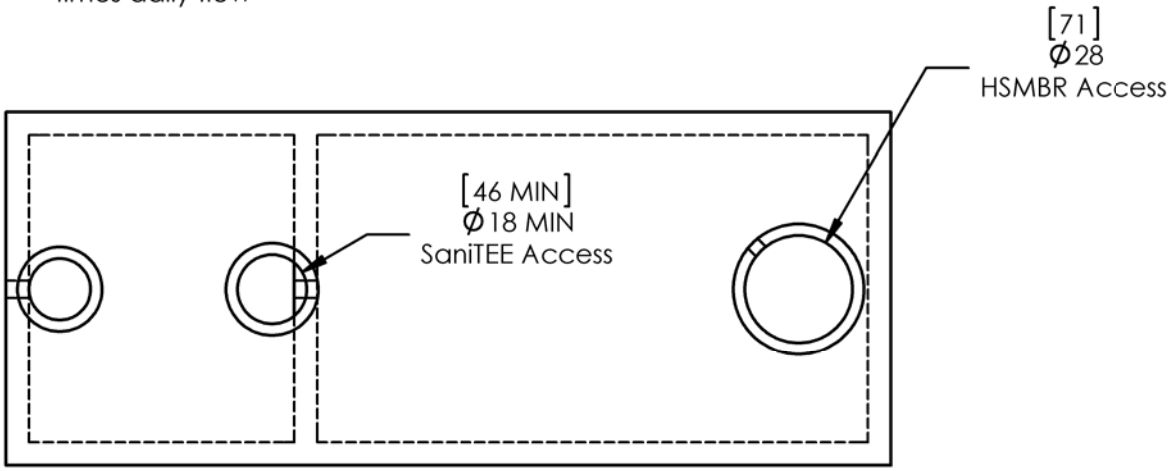

NOTES:
Consult factory for tank volume sizing.

DO NOT SCALE

UNLESS NOTED DIMENSIONS ARE IN INCHES [CENTIMETERS] TOLERANCES ± 0.02 IN/IN [± 0.05 CM/CM]

BIO MICROBICS
BETTER WATER. BETTER WORLD.

HSMBR 1.5

WEIGHT lb		SIZE	DRAWING NUMBER	
NAME	DATE	A	Tank Details HSMBR 1.5-D	SHEET 3 OF 6
DRAWN CTC	11/25/2009			
CHECKED PF	1/26/2016	REVISED 1/26/2016	REV. INI-05-B	

THE INFORMATION CONTAINED IN THIS DRAWING IS THE SOLE PROPERTY OF BIO-MICROBICS INC. ANY REPRODUCTION IN PART OR AS A WHOLE WITHOUT THE WRITTEN PERMISSION OF BIO-MICROBICS INC. IS PROHIBITED. DESIGN AND INVENTION RIGHTS ARE RESERVED. IN THE INTEREST OF TECHNOLOGICAL ADVANCEMENT, ALL PRODUCTS ARE SUBJECT TO DESIGN AND OR MATERIAL CHANGE WITHOUT NOTICE.

BIO-MICROBICS © 2016

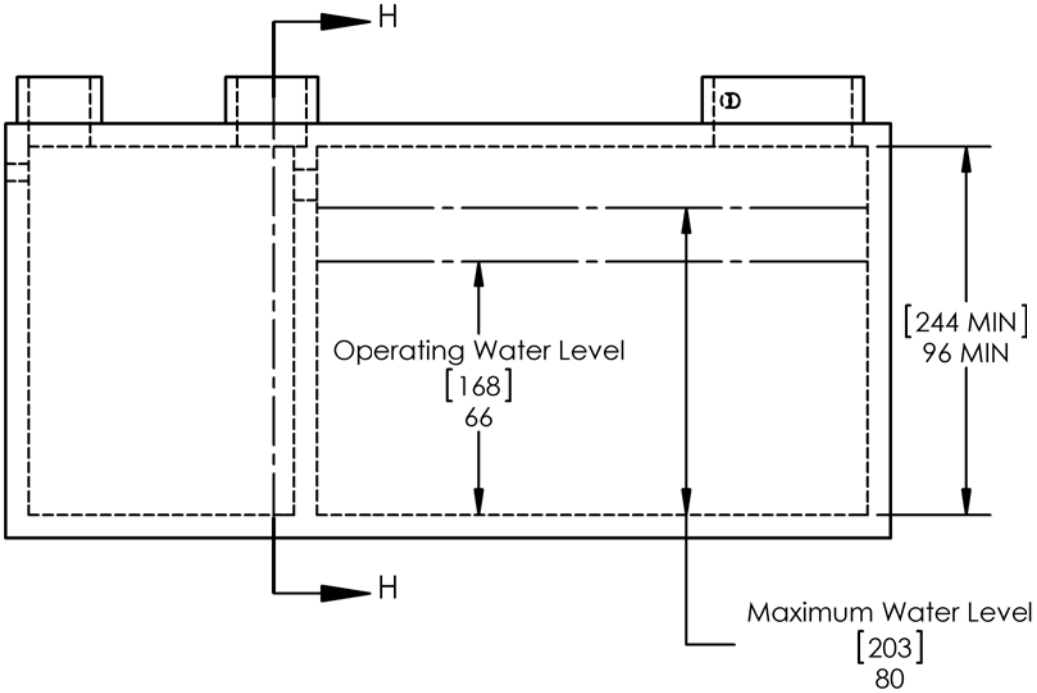

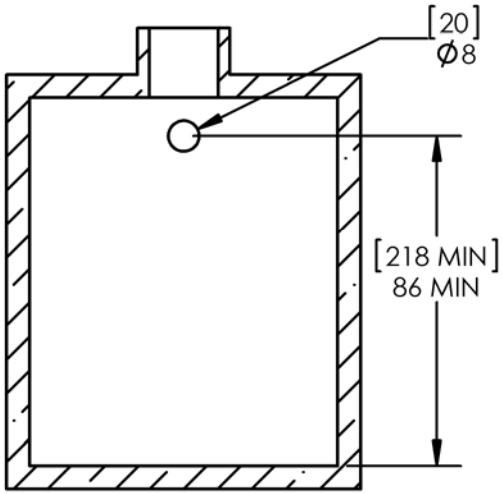

SECTION H-H
SCALE 1 : 50

Settling Zone
Volume 0.5-1
times daily flow

Treatment Zone

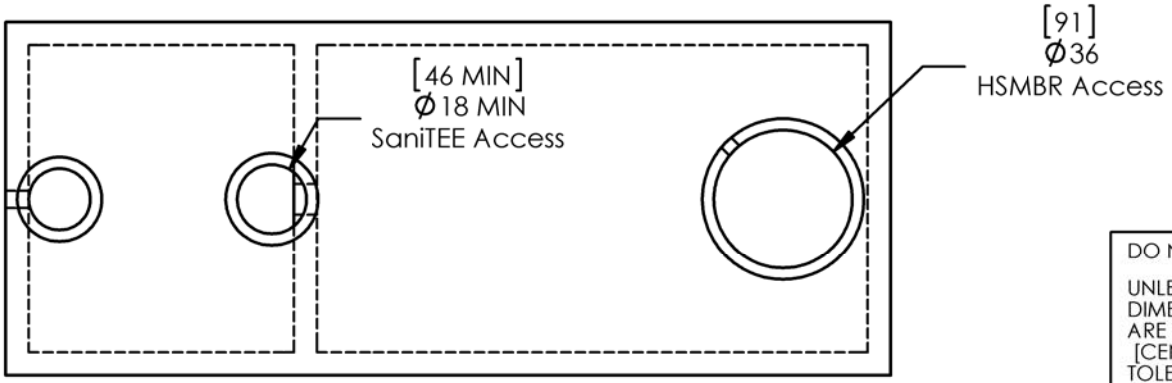

NOTES:
Consult factory for tank volume sizing.

DO NOT SCALE

UNLESS NOTED DIMENSIONS ARE IN INCHES [CENTIMETERS] TOLERANCES ± 0.02 IN/IN [± 0.05 CM/CM]

BIO MICROBICS
BETTER WATER. BETTER WORLD.

HSMBR 1.5

WEIGHT lb		SIZE	DRAWING NUMBER	
NAME	DATE	A	Tank Details HSMBR 1.5-S	SHEET 4 OF 6
DRAWN CTC	11/25/2009			
CHECKED PF	1/26/2016		REVISED 1/26/2016	REV. INI-05-B

THE INFORMATION CONTAINED IN THIS DRAWING IS THE SOLE PROPERTY OF BIO-MICROBICS INC. ANY REPRODUCTION IN PART OR AS A WHOLE WITHOUT THE WRITTEN PERMISSION OF BIO-MICROBICS INC. IS PROHIBITED. DESIGN AND INVENTION RIGHTS ARE RESERVED. IN THE INTEREST OF TECHNOLOGICAL ADVANCEMENT, ALL PRODUCTS ARE SUBJECT TO DESIGN AND OR MATERIAL CHANGE WITHOUT NOTICE.

BIO-MICROBICS © 2016

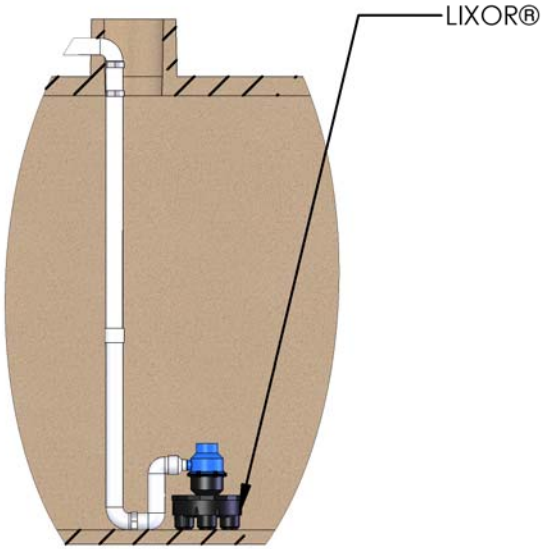

Supplemental Air

see note 4,5, & 6

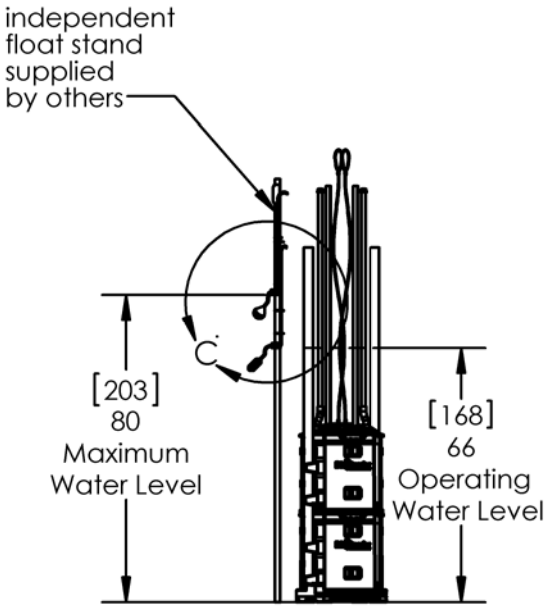

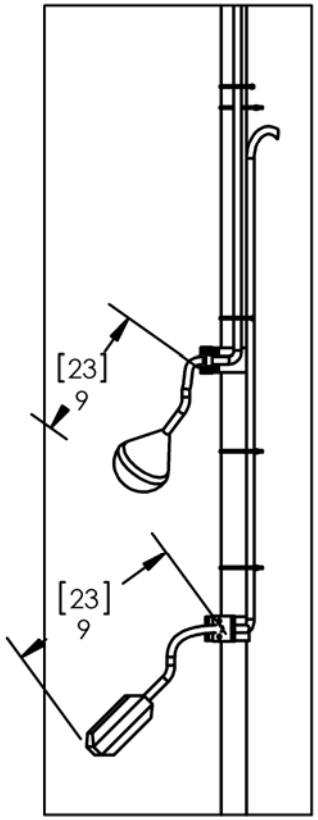

Notes:

1. Filtrate Pump must be secured in a dry vault and not be exposed to freezing temperatures.
2. Float stand should be located away from the MBR modules within the treatment zone to prevent float chatter.
3. Utilize SS lifting cable to remove the MBR module.
4. Supplemental aeration with LIXOR® will be required for wastewater with higher than 300mg/L BOD.
5. See LIXOR® Drawings for more details.
6. Provide additional ventilation as required per LIXOR specifications.

DO NOT SCALE

UNLESS NOTED DIMENSIONS ARE IN INCHES [CENTIMETERS] TOLERANCES ± 0.02 IN/IN [± 0.05 CM/CM]

BIO MICROBICS®
BETTER WATER. BETTER WORLD.®

HSMBR 1.5

WEIGHT	lb	SIZE	DRAWING NUMBER	
NAME	DATE	A	HSMBR® Details	SHEET 5 OF 6
DRAWN CTC	11/25/2009			
CHECKED PF	1/26/2016	REVISED 1/26/2016	REV. INI-06-D	

THE INFORMATION CONTAINED IN THIS DRAWING IS THE SOLE PROPERTY OF BIO-MICROBICS INC. ANY REPRODUCTION IN PART OR AS A WHOLE WITHOUT THE WRITTEN PERMISSION OF BIO-MICROBICS INC. IS PROHIBITED. DESIGN AND INVENTION RIGHTS ARE RESERVED. IN THE INTEREST OF TECHNOLOGICAL ADVANCEMENT, ALL PRODUCTS ARE SUBJECT TO DESIGN AND OR MATERIAL CHANGE WITHOUT NOTICE.

BIO-MICROBICS © 2016

Specifications for BioBarrier® HSMBR® 1.5 Wastewater Treatment System

1. GENERAL

The contractor shall furnish and install (1) BioBarrier® HSMBR® 1.5 treatment system as manufactured by Bio-Microbics, Inc. The treatment system shall be complete with all needed equipment as shown on the drawings and specified herein. The principal items of equipment supplied by Bio-Microbics, Inc. shall include BioBarrier® HSMBR® assemblies, all controls, filtrate pumps, air blower assemblies, and SaniTEE® 818-B pre-screen devices. All other items will be provided by others. The BioBarrier® HSMBR 1.5-D system shall be installed in two (2) identical treatment trains. Each treatment train shall include one (1) BioBarrier® assemblies situated within a two-compartment tank with a minimum wall height of 8 feet. The BioBarrier® HSMBR 1.5-S system shall be installed in one treatment train. The treatment train shall include two (2) BioBarrier® assemblies situated within a two-compartment tank with a minimum wall height of 8 feet. Suggested maximum settling zone is (1) X the daily flow. Tank(s) must provide adequate pump out access and conform to local, state, and all other applicable codes. The contractor shall provide coordination with tank supplier with regards to fabrication of the tank, installation of the BioBarrier® unit and delivery to the job site.

2. OPERATING CONDITIONS

The BioBarrier® HSMBR® 1.5 treatment system shall be capable of treating up to 1,500 gpd wastewater from all facilities producing appropriate waste to develop and sustain a viable biomass. Waste containing inhibitory substances for the biological processes or membrane filtration operation is not recommended for treatment in the BioBarrier® HSMBR® system. Consult factory for proper sizing and usage.

3. MEMBRANE

The membrane is a combination of ultrafiltration and microfiltration using PVdF and PES cast material. The membrane sheet is supported by HDPE or ABS and laser welded to the plate. The BioBarrier® HSMBR® membrane module shall consist of flat sheet membranes arranged in a cartridge which is aerated via subhousing air grid. The BioBarrier® HSMBR® membrane assembly shall be fixed in position and shall use non corrosive parts. Each membrane system shall be designed and installed to ensure that adequate turbulence is provided by the aeration system to insure easy movement of MLSS within the membrane system.

4. BLOWERS

The BioBarrier® HSMBR® 1.5-D system shall come equipped with two (2) blowers each capable of delivering 10 - 15 CFM [17-25 m3/hr]. The blower assemblies shall include an inlet filter with metal filter element. The BioBarrier® HSMBR® 1.5-S system shall come equipped with a blower capable of delivering 20 - 30 CFM [35-50 m3/hr]. The blower assemblies shall include an inlet filter with metal filter element. Blowers shall be mounted, up to 40 feet [12 meters] maximum, and no more than 4 elbows from the BioBarrier® HSMBR® assembly on a contractor supplied concrete base. Blowers must not set in standing water and their elevation must be higher than the normal flood level. A two-piece, rectangular housing shall be provided for each blower. The discharge air line from each blower to the BioBarrier® HSMBR® assembly shall be provided and installed by the contractor.

5. FILTRATE PUMP

Pumps shall be mounted, up to 20 feet (6 meters) maximum from the BioBarrier® HSMBR® tank in a contractor supplied pump chamber. Pumps must not set in standing water and their elevation must be higher than normal flood level. The suction and discharge lines as well as the vacuum gauge and the one-way valve for each pump shall be provided and installed by the contractor. The filtrate pump is not intended as dosing pump for final disposal of the effluent.

6. ELECTRICAL

The electrical source should be within 150 feet [45.7 meters] of the blower consult local codes for longer wiring distances. All wiring must conform to all applicable codes (IEC, NEC, etc.). Wiring distances must prevent significant voltage loss. Input power on 60Hz electrical system is three phase, 208-230 VAC, maximum 20 Amps. Input power on 50Hz electrical system is three phase, 208-230 VAC, maximum 20 Amps. All conduit and wiring shall be supplied by contractor.

7. CONTROLS

The BioBarrier® HSMBR® 1.5-D system shall come equipped with two (2) control panels. The BioBarrier® HSMBR® 1.5-S system shall come equipped with one (1) control panel. Each control panel provides power to the blower, the filtrate pump, and the water level floats with visual and audible alarms capable of signaling blower circuit failure and high water conditions. The control panel is equipped with SFR® (Sequencing Fixed Reactor) timed control feature. A manual silence button is included.

8. INSTALLATION AND OPERATING INSTRUCTIONS

All installation and connections work of the BioBarrier® HSMBR® 1.5 shall be done in accordance with the written instructions provided by the manufacturer and in accordance with all applicable local codes and regulations. Operations manuals shall be furnished which will include a description of installation, operation, and system maintenance procedures.

9. FLOW AND DOSING

BioBarrier® HSMBR® systems have been successfully designed, tested and certified receiving gravity, demand-based influent flow. When influent flow is controlled by pump or other means to help with highly variable flow conditions, then multiple dosing events should be used to help ensure even flow.

10.WARRANTY

Bio-Microbics, Inc. warrants all new High Strength BioBarrier® models (BioBarrier® HSMBR® 1.5 , 3.0, 4.5, 6.0, and 9.0) against defects in materials and workmanship for a period of one year after installation or 18 months from date of shipment which ever occurs first, subject to the following terms and conditions, (all other BioBarrier® system models are warranted for a period of two years after installation or three years from date of shipment, whichever occurs first, subject to the following terms and conditions):

During the warranty period, if any part is defective or fails to perform as specified when operating at design conditions, and if the equipment has been installed and is being operated and maintained in accordance with the written instructions provided by Bio-Microbics, Inc., Bio-Microbics, Inc. will repair or replace at its discretion such defective parts free of charge. Defective parts must be returned by owner to Bio-Microbics, Inc.'s factory postage paid, if so requested. The cost of labor and all other expenses resulting from replacement of the defective parts and from installation of parts furnished under this warranty and regular maintenance items such as filters or bulbs shall be borne by the owner.

This warranty does not cover general system misuse, aerator components which have been damaged by flooding or any components that have been disassembled by unauthorized persons, improperly installed or damaged due to altered or improper wiring or overload protection. This warranty applies only to the treatment plant and does not include any of the structure wiring, plumbing, drainage, septic tank or disposal system. Bio-Microbics, Inc. is reserves the right to revise, change or modify the construction and/or design of the BioBarrier® HSMBR® system, or any component part or parts thereof, without incurring any obligation to make such changes or modifications in present equipment. Bio-Microbics, Inc. is not responsible for consequential or incidental damages of any nature resulting from such things as, but not limited to, defect in design, material, or workmanship, or delays in delivery, replacements or repairs.

THIS WARRANTY IS IN LIEU OF ALL OTHER WARRANTIES EXPRESS OR IMPLIED. BIO-MICROBICS SPECIFICALLY DISCLAIMS ANY IMPLIED WARRANTY OF MERCHANTABILITY OR FITNESS FOR A PARTICULAR PURPOSE. NO REPRESENTATIVE OR PERSON IS AUTHORIZED TO GIVE ANY OTHER WARRANTY OR TO ASSUME FOR BIO-MICROBICS, INC., ANY OTHER LIABILITY IN CONNECTION WITH THE SALE OF ITS PRODUCTS. Contact your local distributor for parts and service.

DO NOT SCALE

UNLESS NOTED DIMENSIONS ARE IN INCHES [CENTIMETERS] TOLERANCES ± 0.02 IN/IN [± 0.05 CM/CM]

BIO MICROBICS®
BETTER WATER. BETTER WORLD.®

HSMBR 1.5

WEIGHT	lb	SIZE	DRAWING NUMBER	SHEET
NAME	DATE	A	Specifications HSMBR 1.5	6 OF 6
DRAWN	11/25/2009			
CHECKED PF	1/26/2016	REVISED 1/26/2016	REV.	

THE INFORMATION CONTAINED IN THIS DRAWING IS THE SOLE PROPERTY OF BIO-MICROBICS INC. ANY REPRODUCTION IN PART OR AS A WHOLE WITHOUT THE WRITTEN PERMISSION OF BIO-MICROBICS INC. IS PROHIBITED. DESIGN AND INVENTION RIGHTS ARE RESERVED. IN THE INTEREST OF TECHNOLOGICAL ADVANCEMENT, ALL PRODUCTS ARE SUBJECT TO DESIGN AND OR MATERIAL CHANGE WITHOUT NOTICE.

BIO-MICROBICS © 2016

PROPOSAL

1314 South King Street, Suite 1051
Honolulu, Hawaii 96814

DATE: 5/13/2020
PROPOSAL: 20705

Project: Wastewater Treatment Options for Milolii Beach Park

Prepared for: Bow Engineering & Development, Inc.

Thank you for your interest in Fluid Technologies and the opportunity to provide you a proposal for the products and services requested.

ITEM	QTY	DESCRIPTION	COST	EXT. COST
A	2	BioBarrier HSMBR 1.5	$20,500.00	$41,000.00
B	2	Non-Traffic Rated Tank, 2000 gallon	$8,025.00	$16,050.00
C	2	UV Disinfection System	$2,000.00	$4,000.00
D	1	Excavation/Construction: mobilize, excavate, install tanks, piping, conduits	$36,250.00	$36,250.00
E	1	Installation of BioBarrier systems and Mission RTU	$18,750.00	$18,750.00
F	1	Mission RTU, includes one year service package and installation	$6,250.00	$6,250.00
G	1	O&M Service (1 year): Sludge pump out	$2,500.00	$2,500.00
H	1	Freight	$3,000.00	$3,000.00
			TOTAL	$127,800.00

Thank you for your consideration.

Respectfully, Jan Reyes

ATTACHMENT 7

NAYADIC WASTEWATER TREATMENT SYSTEM

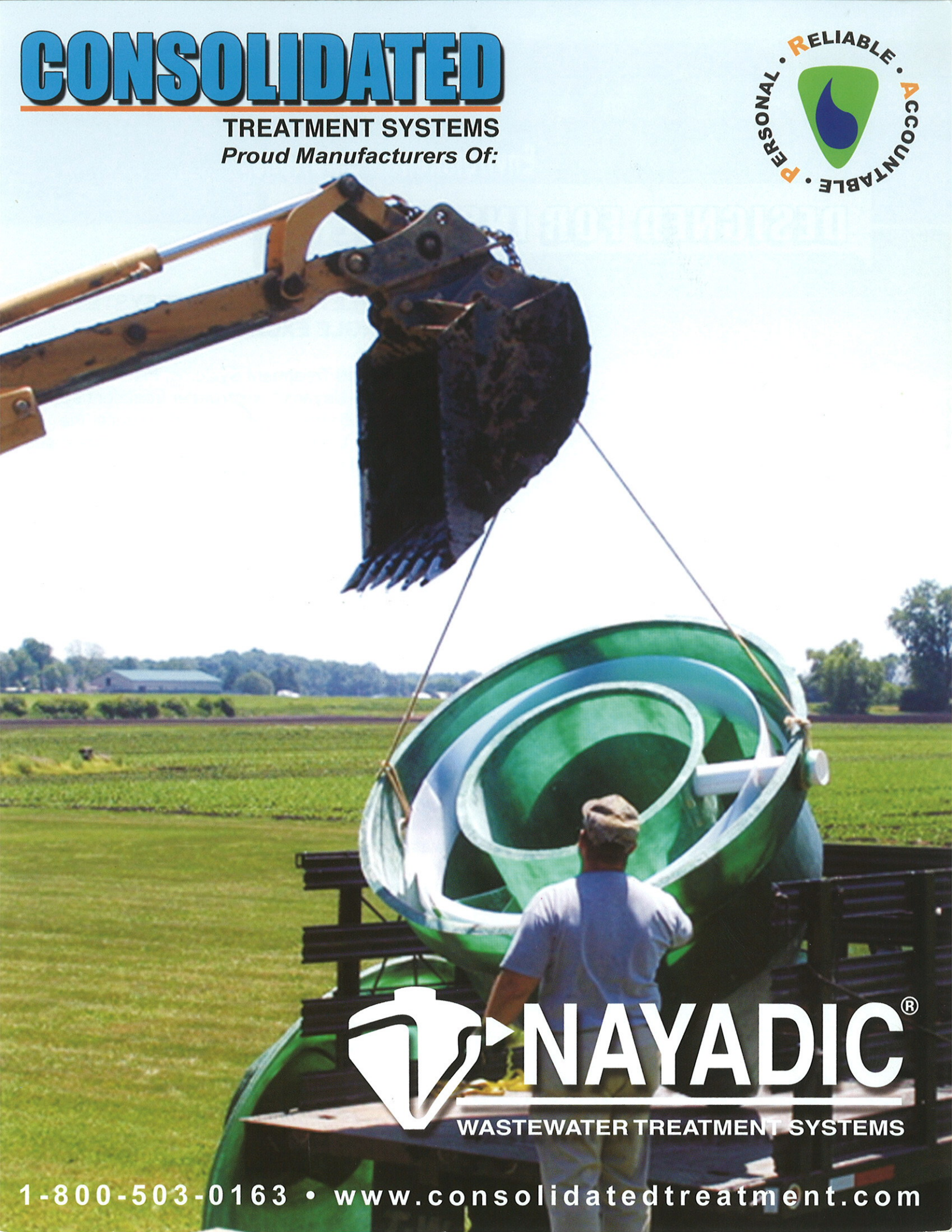
CONSOLIDATED
TREATMENT SYSTEMS
Proud Manufacturers Of:
PERSONAL • RELIABLE • ACCOUNTABLE •
NAYADIC®
WASTEWATER TREATMENT SYSTEMS
1-800-503-0163 • www.consolidatedtreatment.com

CONSOLIDATED

Environmental Solutions

DESIGNED FOR INSTALLERS

A COMPLETE TREATMENT SYSTEM IN A SINGLE EXCAVATION

Consolidated Treatment Systems, Inc. is proud to present the Nayadic® wastewater treatment system. With over 35 years of proven performance, the Nayadic® is the Installer's choice for residential and commercial onsite wastewater treatment.

Designed specifically for installers, the Nayadic® is lightweight, compact, easy to transport, and even easier to install. The system's conical shape requires less excavation than traditional systems which reduces time onsite when digging in rocky soils or areas with high ground water. The compact design is perfect for tight lots and the fiberglass construction eliminates the need for expensive cranes or boom trucks to set the unit.

The system's design is based on the same time tested engineering principles found in today's municipal systems. The Nayadic® has been certified under ANSI/NSF Standard 40 protocol as a class 1 system and removes more than 95% of wastewater contaminants.

Every system comes complete with tank, audible / visual alarm, external compressor and hardware. Units also include a two year manufacturer's warranty.

For more information please visit us on the web at www.consolidatedtreatment.com or call toll free 1-800-503-0163.

NAYADIC®

WASTEWATER TREATMENT SYSTEMS

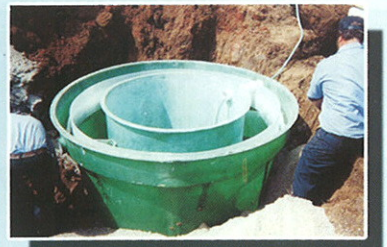

PATENT PENDING

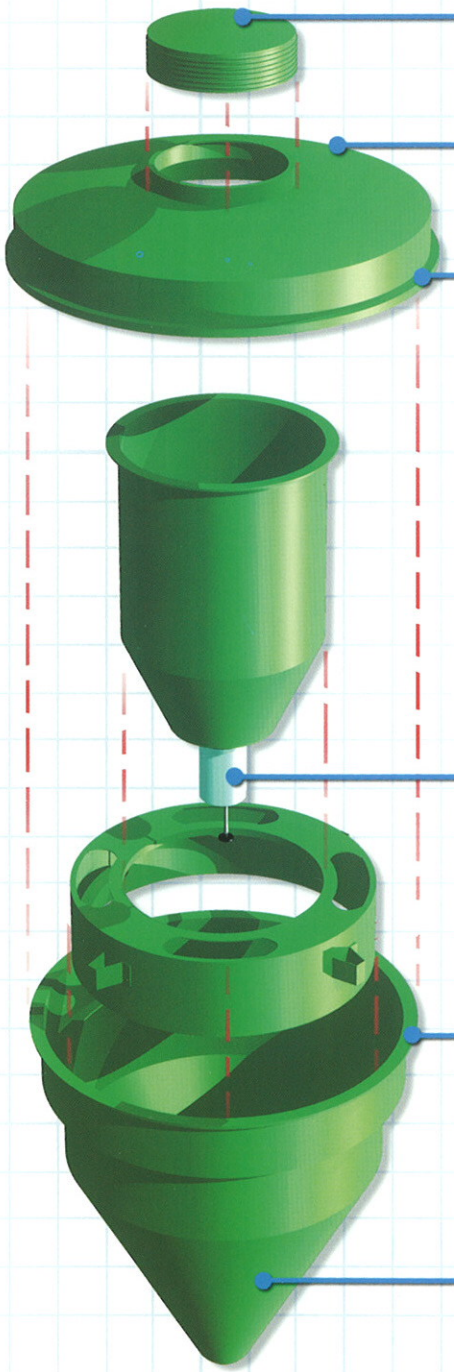

EASILY ACCEPTS STANDARD 24" RISER SECTIONS

3 DISCHARGE OPTIONS SIMPLIFIES DRAIN FIELD CONNECTION

JIG DRILLED COVER EASILY ALIGNS AND INCLUDES 3 LIFTING EYES WHICH ALSO PROVIDE ANCHOR POINTS FOR UPLIFT RESTRAINTS

NOTE: ENTIRE SYSTEM CAN BE FIELD ASSEMBLED IN UNDER 5 MINUTES

MULTIPLE AERATION OPTIONS AVAILABLE

ENGINEERED FLANGE SEALS WATERTIGHT TO PREVENT INFILTRATION AND EXFILTRATION

DURABLE FIBERGLASS CONSTRUCTION (3/16" NOMINAL) HOLDS UP TO THE TOUGHEST SITE CONDITIONS

* ALL COMPONENTS NEST FOR EASY TRANSPORT & FREIGHT SAVINGS

NAYADIC®
WASTEWATER TREATMENT SYSTEM

PRESENTED BY:
CONSOLIDATED TREATMENT SYSTEMS, INC.

CONSOLIDATED
TREATMENT SYSTEMS

1501 Commerce Center Drive
Franklin, Ohio 45005
937-746-2727 Fax: 937-746-1446
www.consolidatedtreatment.com
e-mail: info@consolidatedtreatment.com

Model M-6A
Capacity:
• 600 Gal. Holding
• 500 Gal. Treated
Specifications:
Apx. 485 lbs.
Aeration Rates:
3000 cf/lb. BOD/day at 3 psig
Compressor:
1/4 hp, 1725 rpm, 60 cycle, 115V
Rated Capacity:
2 to 3.7 cfm – up to 5 psig KW 0.19
Diffuser:
Disc Plate, Diaphragm type
Organic Loading:
.5 to 1.5 lbs. BOD/day
Excavation Depth: 86"
Inlet Invert: 65 1/2"

Model M-8A
Capacity:
• 800 Gal. Holding
• 600 Gal. Treated
Specifications:
Apx. 625 lbs.
Aeration Rates:
2950 cf/lb. BOD/day at 3 psig
Compressor:
1/4 hp, 1725 rpm, 60 cycle, 115V
Rated Capacity:
3 to 4 cfm – up to 8 psig KW 0.19
Diffuser:
Disc Plate, Diaphragm type
Organic Loading:
1 to 2 lbs. BOD/day
Excavation Depth: 98 1/2"
Inlet Invert: 72 1/2"

Model M-1050A
Capacity;
• 1050 Gal. Holding
• 800 Gal. Treated
Specifications:
Apx. 760 lbs.
Aeration Rates:
2900 cf/lb. BOD/day at 3 psig
Compressor:
1/4 hp, 1725 rpm, 60 cycle, 115V
Rated Capacity:
3 to 4 cfm – up to 8 psig KW 0.19
Diffuser:
Disc Plate, Diaphragm type
Organic Loading:
1.7 to 2.4 lbs. BOD/day
Excavation Depth: 107"
Inlet Invert: 80 1/2"

Model M-1200A
Capacity:
• 1200 Gal. Holding
• 1000 Gal. Treated
Specifications:
Apx. 950 lbs.
Aeration Rates:
2300 cf/lb. BOD/day at 3 psig
Compressor:
1/3 hp, 1725 rpm, 60 cycle, 115V
Rated Capacity:
3 to 4 cfm – up to 8 psig KW 0.19
Diffuser:
Disc Plate, Diaphragm type
Organic Loading:
1.7 to 2.5 lbs. BOD/day
Excavation Depth: 119"
Inlet Invert: 89"

Model M-2000A
Capacity:
• 2000 Gal. Holding
• 1500 Gal. Treated
Specifications:
Apx. 1180 lbs.
Aeration Rates:
2710 cf/lb. BOD/day at 4 psig
Compressor:
1/2 hp, 1725 rpm, 60 cycle, 115V
Rated Capacity:
6 to 7 cfm – up to 8 psig KW 0.19
Diffuser:
Disc Plate, Diaphragm type
Organic Loading:
2.4 to 4.25 lbs. BOD/day
Excavation Depth: 127 1/2"
Inlet Invert: 98"

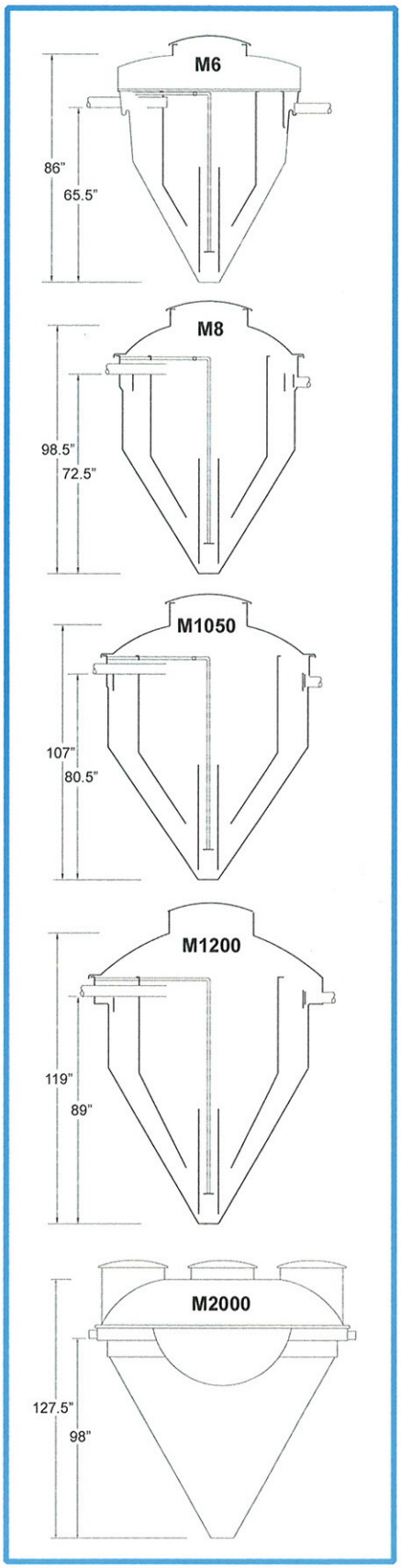

PATENT PENDING

NSF®
Certified to *ANSI/NSF Standard 40*
Class 1

Environmental Solutions

DESIGNED FOR INSTALLERS

© Consolidated Treatment Systems, Inc. 2010 All Rights Reserved

PROCEDURE TO ANCHOR NAYADIC

Fig. 2.3 (NAYADIC INSTALLATION MANUAL EXCERPT)

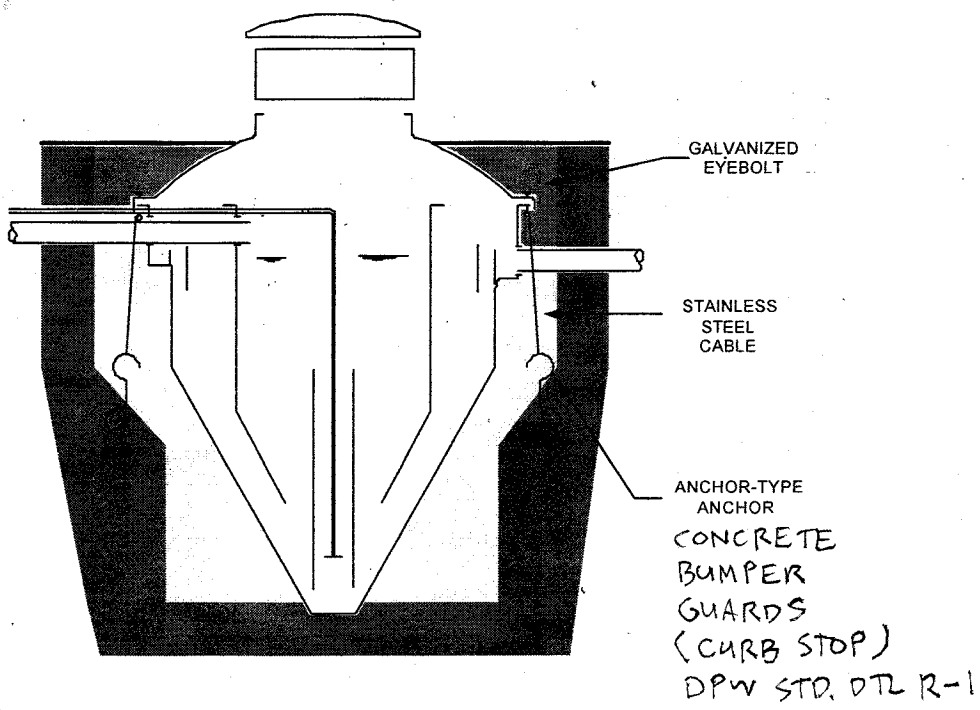

A. CURB STOP AUGER ANCHOR.

(SEE ATTACHED ANCHORING PROCEDURES)

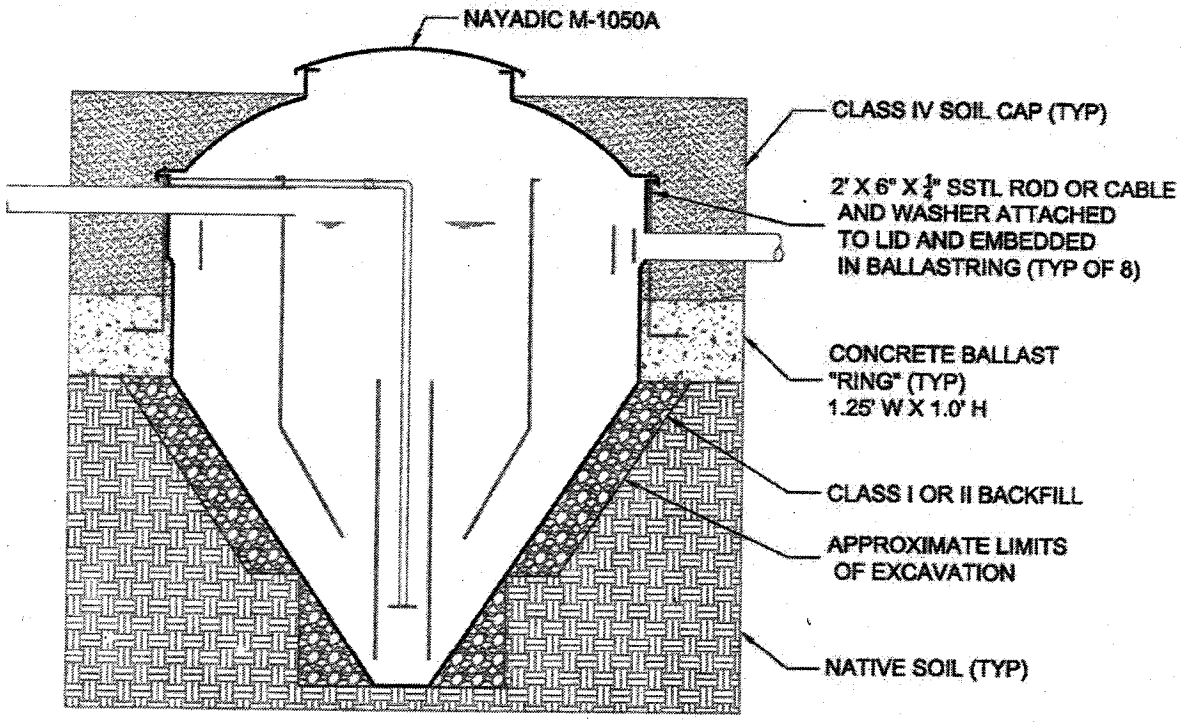

B. CONCRETE BALLAST ANCHOR

2.50 ANCHORING THE NAYADIC TANK

2.51 When installing the ***NAYADIC*** in areas with a high water table or in flood-prone areas, it may be advisable to anchor the tanks to prevent floatation or shifting. (see Fig. 2.3).

2.52 To anchor the tank, use four (4) $^3/_8$" galvanized steel eye bolts, four (4) 24-30" auger tie-downs, and $^1/_8$" galvanized or stainless steel cable (minimum 500 lb test).

2.53 Level the tank and backfill to approximately 12" below the inlet pipe.

2.54 Place the cover on the basin.

2.55 Drill (4) $^3/_8$" holes through the outer flanges of both the cover and basin. These holes should be drilled opposite the four inner tank support brackets.

2.56 Place a 1" washer on the eyebolt and insert into the hole previously drilled in the flange so that the "eye" is on the bottom. Place a second 1" washer on the eyebolt (top of flange) and fasten with nut. Do the same for the remaining 3 holes.

2.57 Screw each of the auger tie-downs into the ground below the 4 eyebolts. Care should be taken to insure the anchors are installed in either undisturbed soil or well-compacted backfill.

2.58 Using the stainless steel cable, fasten the four eyebolts to the respective tie-down. (Option: The cable may be fastened to concrete bumper guards which are buried in surrounding soil at a depth of at least 4' below grade.)

2.59 Finish backfilling around unit.

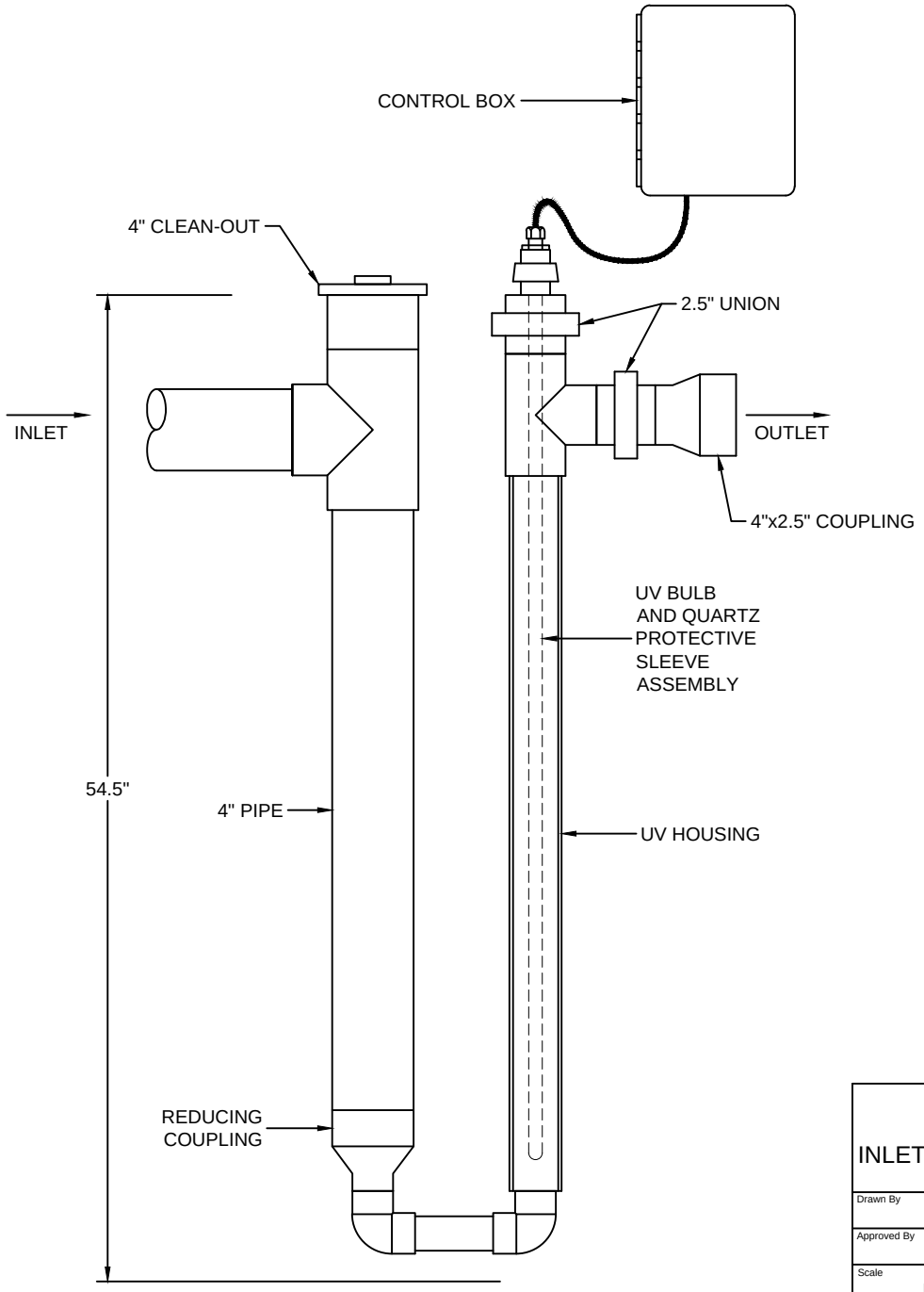

F2 UV

INLET DIRECT-BURIAL MODEL

Drawn By: CCD	Date: 7/16/18
Approved By:	Date Approved:
Scale: NONE	Drawing No.: UV-Post Aeration
Model No.: -	

CONSOLIDATED
TREATMENT SYSTEMS
www.consolidatedtreatment.com

1501 Commerce Center Drive
Franklin, OH 45005

QUOTATION DATE: 27 May 2020

FIRM QUOTE FOR: Nayadic M1200-A*

NAYADIC®
WASTEWATER TREATMENT SYSTEMS

Milolii Beach Park
Submitted via e-mail: Kelsie Sasabe ksasabe@bowengineering.com

PROJECT TMK: TBD

M1200-A with Linear Compressor, 1000 GPD…… $ 14,950.00
plus State of Hawaii General Excise Tax (4.712%)= $ **15,654.44**

- Price quote (location and load) requires spot delivery, which means the price quoted will possibly be subject to additional trucking costs. Provide delivery address for estimate of additional cost. All quotes valid for 30 days from date of quotation.

- Delivery Address: TBD

A 2-year warranty and service contract provided by AINA ENGINEERS INC is included in the total cost. **The service contract includes that all equipment therein shall be free from defects in materials and workmanship.** The service contract is to be engaged and dated following the delivery of the Aerobic Unit.

*All units are delivered complete with a linear compressor, a short (1 ½") PVC extension, standard NAYADIC alarm system, fiberglass tank, F2 Standard ultraviolet light disinfection with control panel, and 2-year service contract. Unit accessories are to be installed following manufacturer's recommendations or as directed by engineer and/or inspector. No installation costs are included; only inspection of aerobic tank installation by AINA ENGINEERS INC personnel. Improper installation may void 2-year warranty.

- Fifty percent (50%) down will be required for all orders.

Accounts unpaid over 30 days will be charged a service charge of one- and one-half percent per month (18% per annum). Deposits may be made payable to AINA ENGINEERS INC, c/o American Savings Bank (ASB) account number 8102034560 routing number 321370765. Credit Card (CC) payments will be charged an additional fee of 3.7%

ACCEPTED BY: _____ (SIGN)

PRINT NAME: _____ DATE: _____

PROVIDED BY

AINA ENGINEERS INC
POB 81, Holualoa, HI 96725
office (808) 895-6173 / fax (808) 331-0449
Aerobic and Traffic Rated Concrete Waste Tanks