Docusign Envelope ID: 45CBAF95-272F-8AFE-805A-A3BDB8E3892E

JOSH GREEN, M.D.
GOVERNOR

RIKI FUJITANI
EXECUTIVE DIRECTOR

Hawai'i School Facilities Authority

2759 S. KING STREET, ROOM H201
HONOLULU, HAWAI'I 96826

May 12, 2026

Ms. Mary Alice Evans, Director
State of Hawai'i
Office of Planning and Sustainable Development
Environmental Review Program
235 South Beretania Street, Suite 702
Honolulu, HI 96813

RE: FINAL ENVIRONMENTAL ASSESSMENT AND FINDING OF NO SIGNIFICANT IMPACT FOR THE PROPOSED MILILANI HIGH SCHOOL TEACHER WORKFORCE HOUSING PROJECT, MILILANI, O'AHU, HAWAI'I, PORTIONS OF TMKs (1) 9-5-001: 017 AND 054

Dear Ms. Evans:

With this letter, the State of Hawai'i School Facilities Authority (SFA) hereby transmits the Final Environmental Assessment and Finding of No Significant Impact (FEA-FONSI) for the proposed Mililani High School Teacher Workforce Housing, situated on portions of TMK parcels (1) 9-5-001: 017 and 054, on the island of O'ahu.

Based on the significance criteria outlined in Title 11, Chapter 200.1, Hawai'i Administrative Rules (HAR), the SFA has made the determination of a Finding of No Significant Impact (FONSI) and that the preparation of an Environmental Impact Statement is not required. The FEA provides the reasons supporting this determination, adequately discloses and describes potential environmental impacts and mitigation measures, and responds to comments received during the required public comment period for the Draft Environmental Assessment.

Docusign Envelope ID: 45CBAF95-272F-8AFE-805A-A3BDB8E3892E

We respectfully request the publication of a notice of availability of this FEA-FONSI in the next edition of *The Environmental Notice*. A digital copy of the FEA-FONSI (searchable PDF) and a Project Location Map have been submitted via the Environmental Review Program's online portal.

Should you have any questions, please contact Cheri Nakamura, SFA's Program and Policy Officer, at (808) 375-5066, or our authorized agent of this project, Greg Nakai, of PBR HAWAII at (808) 521-5631.

Mahalo,

Riki Fujitani

Riki Fujitani
Executive Director

Copy: Lacey Shimabukuro, PHAC
Karen Arakawa, PHAC
Greg Nakai, PBR HAWAII & Associates, Inc.

From: dbedt.opsd.erp@hawaii.gov
To: DBEDT OPSD Environmental Review Program
Subject: New online submission for The Environmental Notice
Date: Monday, May 18, 2026 2:37:38 PM

Action Name

Mililani High School Teacher Workforce Housing

Type of Document/Determination

Final environmental assessment and finding of no significant impact (FEA-FONSI)

HRS §343-5(a) Trigger(s)

- (1) Propose the use of state or county lands or the use of state or county funds

Judicial district

ʻEwa, Oʻahu

Tax Map Key(s) (TMK(s))

Portions of (1) 9-5-001:017 and (1) 9-5-001:054

Action type

Applicant

Other required permits and approvals

Use of school property for affordable housing; HRS 201H; Dust Control Plan; Noise Permit (if necessary); National Pollutant Discharge Elimination System (NPDES) Permit; HRS Section 6E Review; Permit to Perform Work Upon State Highways; Permit for the Occupancy and Use of State Highways; Permit to Operate or Transport Oversize and/or Overweight Vehicles and Loads Over State Highways (if necessary); Grading, Grubbing, and Stockpiling Permits; Building Permit (electrical, plumbing, civil); Occupancy Permit; Site Development Master Application for Sewer Connection; Storm Drain Connection License (if necessary); Storm Water Quality Strategic Plan; Rules Relating to Water Quality and Storm Drainage Standards Compliance; Street Usage Permit

Discretionary consent required

Use of school property for affordable housing

Agency jurisdiction

State of Hawaiʻi

Approving agency

Hawaiʻi School Facilities Authority (SFA)

Agency contact name

Riki Fujitani

Agency contact email (for info about the action)

riki.fujitani@hisfa.org

Agency contact phone

(415) 226-6837

Agency address

2759 S. King Street
Honolulu, HI 96826
United States
Map It

Applicant

Pacific Housing Assistance Corporation (PHAC)

Applicant contact name

Audrey Awaya

Applicant contact email

aawaya@pacific-housing.org

Applicant contact phone

(808) 523-5681

Applicant address

888 Iwilei Road, Suite 200
Honolulu, HI 96817
United States
Map It

Is there a consultant for this action?

Yes

Consultant

PBR HAWAII & Associates, Inc.

Consultant contact name

Greg Nakai

Consultant contact email

sysadmin@pbrhawaii.com

Consultant contact phone

(808) 521-5631

Consultant address

1001 Bishop Street, Suite 650
Honolulu, HI 96813
United States
Map It

Action summary

The Hawai‘i School Facilities Authority (SFA), a state agency that collaborates with the Hawai‘i Department of Education (DOE) to provide housing options for educators, is partnering with the Pacific Housing Assistance Corporation (PHAC) to develop approximately 95 multi-family apartments for rent to DOE teachers, education personnel, and their families, who will be given a preference to live in the units. Units will be rented to households earning up to 120% AMI. Plans include on-site parking, amenities, and sustainability features.

Reasons supporting determination

Refer to Section 7.2 (Significance Criteria) of the FEA.

Attached documents (signed agency letter & EA/EIS)

- Final-EA_-Mililani-HS-Teacher-Workforce-Housing.pdf
- MHS-Teacher-Workforce-Housing-FONSI-Letter-05-12-2026_ADA.pdf

Shapefile

- The location map for this Final EA is the same as the location map for the associated Draft EA.

Action location map

- Project-Site-Boundaries.zip

Compliance certification (HRS §368-1.5):

The authorized individual listed below certifies that documents submitted are unlocked, searchable, and compliant with the Hawaii Electronic Information Technology Disability Access Standards (including, but not limited to transcripts, captions, and other descriptions accompanying audio/video files). The individual acknowledges that the submitter retains the responsibility for compliance after documents have been published and any compliance queries will be directed back to the agency and/or applicant.

Authorized individual

Greg Nakai

Authorized individual email

sysadmin@pbrhawaii.com

Authorized individual phone

(808) 521-5631

Authorization

- The above named authorized individual hereby certifies that he/she has the authority to make this submission.

Mililani High School Teacher Workforce Housing

Final Environmental Assessment/ Finding of No Significant Impact

Prepared for:
Pacific Housing Assistance Corporation

Prepared by:
PBR HAWAII & Associates, Inc.

May 2026

(This page intentionally left blank.)

TABLE OF CONTENTS

1.0 INTRODUCTION....1

1.1 PROJECT SUMMARY 1
1.2 LOCATION 2
1.3 SURROUNDING LAND USES.... 2
1.4 LAND OWNERSHIP 3
1.5 IDENTIFICATION OF APPLICANT 3
1.6 IDENTIFICATION OF ENVIRONMENTAL CONSULTANT 4
1.7 COMPLIANCE WITH STATE OF HAWAIʻI AND CITY AND COUNTY OF HONOLULU ENVIRONMENTAL LAWS 4
1.8 IDENTIFICATION OF AGENCIES AND ORGANIZATIONS CONSULTED.. 4
1.8.1 Early Consultation 4
1.8.2 Community Outreach.... 6
1.8.3 Draft EA Public Review 10

2.0 PROJECT DESCRIPTION 15

2.1 BACKGROUND AND NEED FOR THE PROJECT.... 15
2.2 PROJECT OBJECTIVES 16
2.3 DESCRIPTION OF THE PROJECT.... 17
2.3.1 Sustainable Design.... 19
2.4 PROJECT COST AND IMPLEMENTATION TIMEFRAME 22

3.0 DESCRIPTION OF THE NATURAL ENVIRONMENT, POTENTIAL IMPACTS, AND MITIGATION MEASURES....23

3.1 CLIMATE.... 23
3.2 TOPOGRAPHY.... 23
3.3 SOILS 23
3.3.1 Natural Resources Conservation Service.... 24
3.3.2 Land Study Bureau Detailed Land Classification.... 24
3.3.3 Agricultural Lands of Importance to the State of Hawaiʻi 24
3.4 HYDROLOGY 26
3.5 NATURAL HAZARDS.... 27
3.6 FLORA & FAUNA.... 31

4.0 DESCRIPTION OF THE HUMAN ENVIRONMENT, POTENTIAL IMPACTS, AND MITIGATION MEASURES....35

4.1 ARCHAEOLOGICAL AND CULTURAL RESOURCES.... 35
4.1.1 Archaeological Resources.... 35
4.1.2 Cultural Resources 36
4.2 TRANSPORTATION.... 39

4.2.1 Roadways and Traffic 41
4.2.2 Public Transportation 52
4.2.3 Pedestrian and Bicycle Facilities 53
4.2.4 Parking 55
4.3 NOISE 57
4.4 VISUAL RESOURCES 59
4.5 SOCIAL & ECONOMIC CHARACTERISTICS 60
4.6 INFRASTRUCTURE AND UTILITIES 62
4.6.1 Water System 62
4.6.2 Wastewater System 65
4.6.3 Drainage System 66
4.6.4 Electrical and Telecommunications Systems 67
4.6.5 Gas 68
4.6.6 Solid Waste 68
4.7 PUBLIC SERVICES AND FACILITIES 69
4.7.1 Police Protection 69
4.7.2 Fire Protection 69
4.7.3 Health Care Services 70
4.7.4 Recreational Facilities 71
4.7.5 Schools 71

5.0 LAND USE CONFORMANCE 75

5.1 STATE OF HAWAIʻI 75
5.1.1 State Environmental Review Law, Chapter 343, Hawaiʻi Revised Statutes and Chapter 11-200.1, Hawaiʻi Administrative Rules 75
5.1.2 State Land Use Law, Chapter 205, Hawaiʻi Revised Statutes 75
5.1.3 Coastal Zone Management Act, Chapter 205A, Hawaiʻi Revised Statutes 75
5.1.4 Hawaiʻi State Planning Act, Chapter 226, Hawaiʻi Revised Statutes 81
5.1.5 Hawaiʻi 2050 Sustainability Plan 115
5.1.6 State Environmental Policy, Chapter 344, Hawaiʻi Revised Statutes 138
5.2 CITY AND COUNTY OF HONOLULU 142
5.2.1 Oʻahu General Plan 142
5.2.2 Central Oʻahu Sustainable Communities Plan 145
5.2.3 Land Use Ordinance (LUO) 145
5.2.4 Special Management Area 149
5.3 LIST OF REQUIRED PERMITS AND APPROVALS 149

6.0 ALTERNATIVES 151

6.1 NO ACTION 151
6.2 OTHER SITES ON CAMPUS 151
6.2.1 Site 2 151
6.2.2 Site 3 151
6.2.3 Preferred Site 152
6.3 OTHER SITE ON CAMPUS – NORTHEAST CORNER 152

7.0 FINDINGS, SUPPORTING REASONS, AND DETERMINATION 153

7.1 PROBABLE IMPACT, INCLUDING CUMULATIVE IMPACTS 153
7.2 SIGNIFICANCE CRITERIA 154
7.3 DETERMINATION 156

8.0 REFERENCES.....157

LIST OF TABLES

Table 1: List of Pre-Assessment Consultation Comments 5
Table 2: Community Outreach..... 7
Table 3: List of Draft EA Public Review Comments 11
Table 4: Existing Intersection Operations (LOS) 43
Table 5: Projected Trip Generation by Mililani High School Teacher Workforce Housing..... 45
Table 6: Future Year 2030 AM Peak Hour Intersection Operations (LOS) 46
Table 7: Future Year 2030 PM Peak Hour Intersection Operations (LOS)..... 47
Table 8: Existing Pedestrian and Bicycle Volumes 53
Table 9: Minimum Off-Street Parking Ratios (per LUO Table 21-6.1) 56
Table 10: Coastal Zone Management Act, Chapter 205A, HRS 76
Table 11: Hawai‘i State Plan, Chapter 226, HRS – Part I 81
Table 12: Hawai‘i State Plan, Chapter 226, HRS – Part III 105
Table 13: Hawai‘i 2050 Sustainability Plan 115
Table 14: State Environmental Policy, Chapter 344, HRS 138
Table 15: O‘ahu General Plan Objectives and Policies for Housing and Communities 142
Table 16: Required Permits and Approvals 149

LIST OF FIGURES[1]

Figure 1: Regional Location
Figure 2: Tax Map Key
Figure 3: Aerial Image
Figure 4: Site Photos
Figure 5: Preliminary Site Plan
Figure 5b: Proposed Relocated Parking
Figure 6: Topography
Figure 7: Natural Resources Conservation Service Soil Survey
Figure 8: Land Study Bureau Detailed Land Classification
Figure 9: Agricultural Lands of Importance to the State of Hawai‘i
Figure 10: USFWS National Wetlands Inventory
Figure 11: Flood Insurance Rate Map
Figure 12: Public Facilities

[1] Figures can be found in Appendix K.

LIST OF APPENDICES

Appendix A: Pre-Assessment Consultation Comments and Responses
Appendix B: Mililani/Waipi‘o/Melemanu Neighborhood Board No. 25
Appendix C: Mililani Mauka/Launani Valley Neighborhood Board No. 35
Appendix D: Employee Housing Survey Presentation
Appendix E: Terrestrial Flora and Fauna Assessment
Appendix F: Archaeological Pedestrian Survey
Appendix F-1: SHPD Review Letter
Appendix G: Cultural Impact Assessment
Appendix H: Transportation Impact Assessment Report
Appendix I: Acoustic Study
Appendix J: Civil Due Diligence
Appendix K: Figures
Appendix L: Draft EA Public Review Comments and Responses
Appendix M: Parking Demand Study

LIST OF ABBREVIATIONS & ACRONYMS

The following is a list of terms, abbreviations, and acronyms used in this document.

A	
AADT	Annual Average Daily Traffic
ADA	Americans with Disabilities Act
ADT	Average Daily Trips
AIS	Archaeological Inventory Survey
ALISH	Agricultural Lands of Importance to the State of Hawai‘i
AM	Morning
B	
BD+C	Building Design + Construction (LEED rating system)
BFP	Backflow Preventer
BMPs	Best Management Practices
BWS	City and County of Honolulu, Board of Water Supply
C	
CCH	City and County of Honolulu
CDP	Census Designated Place
cfs	Cubic Feet per Second
CIA	Cultural Impact Assessment
CO	Carbon Monoxide
COSCP	Central O‘ahu Sustainable Communities Plan
CPTED	Crime Prevention Through Environmental Design
CTMP	Construction Traffic Management Plan
CWRM	DLNR Commission on Water Resource Management
CZM	Coastal Zone Management
D	
dB	Decibel
dBA	A-Weighted Decibel
DCAB	Disability and Communication Access Board
DLNR	State of Hawai‘i, Department of Land and Natural Resources
DNL	HUD Day/Night Noise Level
DOE	State of Hawai‘i, Department of Education
DOT	State of Hawai‘i, Department of Transportation
DPP	City and County of Honolulu, Department of Planning and Permitting
DTS	City and County of Honolulu, Department of Transportation Services
E	
EA	Environmental Assessment
ENV	City and County of Honolulu, Department of Environmental Services
EPA	U.S. Environmental Protection Agency
ERP	State of Hawai‘i, Office of Planning & Sustainable Development, Environmental Review Program
EV	Electric Vehicle
F	
FAR	Floor Area Ratio
FEMA	Federal Emergency Management Agency

FIRM	Flood Insurance Rate Map
FONSI	Finding of No Significant Impact
Footprint	A building footprint provides the outline of a building drawn along the exterior walls, with a description of the exact size, shape, and location of its foundation.

G

GHG	Greenhouse Gas
GIS	Geographic Information Systems
gpd	Gallons Per Day
gpm	Gallons Per Minute

H

H-POWER	Honolulu Program of Waste Energy Recovery
HAR	Hawai‘i Administrative Rules
HCM	Highway Capacity Manual
HDOT	State of Hawai‘i, Department of Transportation
HECO	Hawaiian Electric Company
HFD	Honolulu Fire Department
HHFDC	Hawai‘i Housing Finance and Development Corporation
HICRIS	Hawai‘i Cultural Resource Information System
HIDOE	State of Hawai‘i, Department of Education
HiSFA	State of Hawai‘i School Facilities Authority
HPD	Honolulu Police Department
HRS	Hawai‘i Revised Statutes
HUD	U.S. Department of Housing and Urban Development
HVAC	Heating, Ventilation, and Air Conditioning

I

IPaC	Information for Planning and Consultation
IPCC	Intergovernmental Panel on Climate Change
ITE	Institute of Transportation Engineers

L

L_{dn}	Day-Night Noise Level
LDS Church	The Church of Jesus Christ of Latter-day Saints
LEED	Leadership in Energy and Environmental Design
L_{eq}	Equivalent Noise Level
LID	Low Impact Development
LOS	Level of Service
LSB	Land Study Bureau
LUC	State of Hawai‘i, Land Use Commission
LUO	Land Use Ordinance

M

Massing	Building massing refers to the overall vertical configuration of the building
MDPT	Mililani Disaster Preparedness Team
MGD	Million Gallons per Day
MHS	Mililani High School
MOA	Memorandum of Agreement
MOU	Memorandum of Understanding
MPH	Miles Per Hour

MSL	Mean Sea Level
MTA	Mililani Town Association
N	
NB	Neighborhood Board
NB25	Mililani-Waipi‘o-Melemanu Neighborhood Board No. 25
NB35	Mililani Mauka/Launani Valley Neighborhood Board No. 35
NFPA	National Fire Protection Association
NOAA	National Oceanic and Atmospheric Administration
NPDES	National Pollutant Discharge Elimination System Permit
NRCS	Natural Resources Conservation Service
O	
OPSD	State of Hawai‘i, Office of Planning and Sustainable Development
P	
PHAC	Pacific Housing Assistance Corporation
PIFWO	Pacific Islands Fish and Wildlife Office
PM	Afternoon
ppt	Parts per Thousand
PUC	Primary Urban Center
PV	Photovoltaic
R	
RFP	Request for Proposal
ROH	Revised Ordinances of Honolulu
ROW	Right-Of-Way
S	
SCC	School Community Council
SDGs	Sustainable Development Goals
SEFP	State Education Functional Plan
SFA	State of Hawai‘i School Facilities Authority
SFP	State Functional Plan
SHPD	State of Hawai‘i, Historic Preservation Division
SLH	Session Laws of Hawai‘i
SLR	Sea Level Rise
SLR-XA	Sea Level Rise Exposure Area
SMA	Special Management Area
T	
TDM	Transportation Demand Management
TIA	Transportation Impact Analysis
TIAR	Transportation Impact Analysis Report
TMK	Tax Map Key
TMP	Traffic Management Plan
U	
UIC	Underground Injection Control
USFWS	U.S. Fish and Wildlife Service
W	
WSFC	Water System Facilities Charge

(This page intentionally left blank.)

1.0 INTRODUCTION

This Environmental Assessment (EA) is prepared in accordance with Hawai‘i Revised Statutes (HRS) Chapter 343, and Hawai‘i Administrative Rules (HAR) Chapter 11-200.1, for the construction of the proposed Mililani High School Teacher Workforce Housing ("Project").

1.1 PROJECT SUMMARY

Project Name:	Mililani High School Teacher Workforce Housing
Location:	95-1200 Meheula Parkway, Mililani, Hawai‘i 96789 (Figure 1: Regional Location)
Judicial District:	Central O‘ahu
Tax Map Key (TMK):	Portions of (1) 9-5-001:017 and 054 (Figure 2: Tax Map Key)
Applicant:	Pacific Housing Assistance Corporation (PHAC)
Landowner:	State of Hawai‘i
Existing Uses:	Parking lot and vacant (Figure 3: Aerial Image, Figure 4: Site Photos)
Proposed Action:	The development of approximately 95 multi-family apartments for rental to Hawai‘i Department of Education (DOE) teachers, education personnel, and their families, who will be given a preference to live in the units.
Project Area:	Approximately 86,031 square feet (1.975 acres) (Figure 5: Preliminary Site Plan)
Land Use Designations:	• State Land Use: *Urban* • Central O‘ahu Sustainable Communities Plan Urban Land Use Map: *High School (Existing)* • County Zoning: Residential *(R-5)*
Special Management Area (SMA):	The Project is located outside the SMA
Permits/Approvals Required:	• Use of school property for affordable housing • HRS 201H • Dust Control Plan • Noise Permit (if necessary) • National Pollutant Discharge Elimination System (NPDES) Permit • HRS Section 6E Review • Permit to Perform Work Upon State Highways • Permit for the Occupancy and Use of State Highways • Permit to Operate or Transport Oversize and/or Overweight Vehicles and Loads Over State Highways (if necessary)

	• Grading, Grubbing, and Stockpiling Permits • Building Permit (electrical, plumbing, civil) • Occupancy Permit • Site Development Master Application for Sewer Connection • Storm Drain Connection License (if necessary) • Storm Water Quality Strategic Plan • Rules Relating to Water Quality and Storm Drainage Standards Compliance • Street Usage Permit
Proposing/Approving Agency:	Hawai‘i School Facilities Authority (SFA)
Anticipated Determination:	Finding of No Significant Impact (FONSI)

1.2 LOCATION

The Project site is located in the southwestern portion of the Mililani High School (MHS) campus along Meheula Parkway (Figure 3: Aerial Image). The John Kauinana Football Stadium (MHS track and field) is to the west of the Project site. To the north of the Project site are the MHS baseball and softball fields. Northeast of the Project site are the MHS tennis courts (Figure 4: Site Photos). The Project site does not border any existing single-family residences.

1.3 SURROUNDING LAND USES

Mililani sits on former plantation fields owned by Castle & Cooke, (the original developer) which began planning for its development in 1958 under its Oceanic Properties subsidiary. According to Castle & Cooke's website, Mililani is home to over 50,000 residents who benefit from Mililani's many recreational, educational, and business facilities. Mililani is known for its wide tree-lined streets, including the portion of Meheula Parkway fronting the Project site. The master-planned community of Mililani includes seven public schools, approximately 21 parks, 7 recreation centers, and about 12 churches. There also are three major shopping centers—Town Center of Mililani, Mililani Shopping Center, and Mililani Market Place—and a variety of other health- and service-related businesses. The MHS (and the Project site) is centrally located within Mililani.

Besides the MHS athletic facilities land uses immediately surrounding the Project site (as described in Section 1.2 above), other land uses in the vicinity of the campus include Meheula Parkway, a Post Office, The Church of Jesus Christ of Latter-day Saints (LDS Church), YMCA of Honolulu Mililani Branch, Mililani Public Library, Town Center of Mililani (shopping center), Mililani Town Association Recreation Center 1, Mililani Waena Park, Mililani Waena Elementary School, and single-family residences.

During the Draft EA public comment period, the City and County of Honolulu (CCH) Department of Planning and Permitting (DPP) wrote:

> *"On February 13, 2026, a Zoning Waiver for an enclosure over the nearby tennis court was approved (File No. 2025-W-29). The subject housing Project is approximately 30 feet from the new structure. There is no mention of the new structure over the Mililani High*

School tennis court in the Draft EA. The Final EA should be updated to include accurate information about the surroundings. This includes all other foreseeable projects within the vicinity." (Appendix L)

The only known projects proposed in the Project vicinity include: the DOE covered play court proposed to be built over the nearby existing MHS tennis courts, and a crosswalk planned at the intersection of Hikikaulia Street and Meheula Parkway (and is currently in the design and planning phase by the CCH Department of Transportation Services (DTS)). The proposed Project has been designed to be setback 30 feet from the DOE covered play court. A crosswalk at the intersection of Hikikaulia Street and Meheula Parkway will not only benefit students of MHS, but residents of the proposed Project as well.

1.4 LAND OWNERSHIP

Utilizing the Tax Map Key (TMK) system, the land under the Project site is identified as portions of TMK (1) 9-5-001:017 and 054 (Figure 2: Tax Map Key), which is owned by the State of Hawai'i, Department of Education.

Contact: Department of Education
Attn: Keith Hayashi, Superintendent
1390 Miller Street
Honolulu, HI 96813

Contact: Department of Education
Attn: Jadine Urasaki, Public Works Administrator
3633 Wai'alae Avenue
Administration Building, Room 201
Honolulu, HI 96816

During the Draft EA public comment period, the DOE Office of Facilities and Operations wrote:

"Department Land Ownership and Use of School Property
In Section 1.4, the Department would like to clarify that by operation of law, the land underlying the Project is owned by the State of Hawaii, Department of Education." (Appendix L)

1.5 IDENTIFICATION OF APPLICANT

Pacific Housing Assistance Corporation (PHAC) is the Applicant. Founded in 1980, PHAC is a nonprofit organization that has played a pivotal role in the development of over 60 properties across Hawai'i. Their initiatives have enabled the creation of affordable homeownership and rental housing to address the critical housing needs of Hawai'i's diverse communities. More information about their properties is available on their website https://www.pacific-housing.org/properties.

Contact: Audrey Awaya
Pacific Housing Assistance Corporation
888 Iwilei Road, Suite 200
Honolulu, HI 96817
Phone: (808) 523-5681

1.6 IDENTIFICATION OF ENVIRONMENTAL CONSULTANT

The environmental consultant is PBR HAWAII & Associates, Inc. (PBR HAWAII).

Contact: Greg Nakai
Senior Associate
PBR HAWAII
1001 Bishop Street, Suite 650
Honolulu, HI 96813
Phone: (808) 521-5631
Fax: (808) 523-1402

1.7 COMPLIANCE WITH STATE OF HAWAIʻI AND CITY AND COUNTY OF HONOLULU ENVIRONMENTAL LAWS

Preparation of this document is in accordance with the provisions of HRS Chapter 343 (2007) and Hawaiʻi Administrative Rules (HAR) Title 11, Chapter 200.1 pertaining to Environmental Impact Statements. HRS Section 343-5 established nine "triggers" that require either an EA or an Environmental Impact Statement (EIS). The use of State or County lands or funds requires the preparation of an EA.

1.8 IDENTIFICATION OF AGENCIES AND ORGANIZATIONS CONSULTED

1.8.1 Early Consultation

A Pre-Assessment consultation was conducted from September 4, 2025, to October 4, 2025, concurrently with the research and the preparation of the Draft EA. The purpose of the Pre-Assessment consultation was to consult with agencies, organizations, and individuals with technical expertise or an interest in, or will be affected by, the proposed Project. This process is part of the scoping process for the Draft EA. Comments and input received during this period were used to identify environmental issues and concerns to be addressed in the Draft EA.

As part of this early consultation process, the agencies, organizations, and individuals who were sent Pre-Assessment consultation solicitation letters are listed in Table 1 below. Those who provided written comments (either by hard copy or electronically) are indicated in Table 1. Copies of the written comments and responses are reproduced in Appendix A: Pre-Assessment Consultation Comments and Responses.

Table 1: List of Pre-Assessment Consultation Comments

Agencies/Organizations/Individuals	Pre-Assessment Consultation Letter Sent	Pre-Assessment Comment Received (Comment Date)
STATE		
Environmental Review Program (ERP)	X	
Department of Accounting and General Services	X	
Department of Business, Economic Development & Tourism (DBEDT)	X	
DBEDT – Hawai‘i State Energy Office/Strategic Industries Division	X	
DBEDT – Office of Planning and Sustainable Development	X	2025-09-29
Department of Defense	X	2025-10-09
Department of Education	X	2025-10-03
Department of Health (DOH)	X	
DOH – Environmental Health Administration	X	
DOH – Clean Water Branch	X	
DOH – Wastewater Branch	X	2025-09-11
Department of Human Services	X	
Department of Land and Natural Resources (DLNR)	X	
DLNR – Commission on Water Resource Management	X	2025-10-06
DLNR – Division of Aquatic Resources	X	
DLNR – Division of Boating and Ocean Recreation	X	
DLNR – Division of Forestry & Wildlife	X	
DLNR – Engineering Division	X	2025-10-03
DLNR – Historic Preservation Division	X	
Department of Transportation	X	2025-09-23
Hawai‘i Housing Finance and Development Corporation	X	
Hawai‘i Community Development Authority	X	
Office of Hawaiian Affairs	X	
FEDERAL		
U.S. Army Corps of Engineers, Pacific Ocean Division	X	
U.S. Fish and Wildlife Service	X	2025-09-12
NOAA National Marine Fisheries Service	X	
Federal Emergency Management Agency, Region IX	X	
COUNTY		
Board of Water Supply	X	2025-10-01
Department of Community Services	X	
Department of Design and Construction	X	2025-09-17
Department of Environmental Services	X	
Department of Facility Maintenance	X	
Department of Planning and Permitting	X	2025-10-06
Department of Transportation Services	X	2025-10-08

Agencies/Organizations/Individuals	Pre-Assessment Consultation Letter Sent	Pre-Assessment Comment Received (Comment Date)
Oʻahu Transit Services	X	
Honolulu Fire Department	X	2025-09-17
Honolulu Police Department	X	2025-09-18
Office of Climate Change, Sustainability, and Resiliency	X	
Neighborhood Board	X	
ELECTED OFFICIALS		
U.S. Senator Mazie Hirono	X	
U.S. Representative Ed Case	X	
Governor Josh Green	X	
Mayor Rick Blangiardi	X	
State Senator Donovan Dela Cruz (District 17)	X	
State Senator Michelle Kidani (District 18)	X	
State Representative Lauren Matsumoto (District 38)	X	
State Representative Trish La Chica (District 37)	X	2025-09-23
City Councilmember Val Okimoto (District 8)	X	
Neighborhood Board No. 25 Chair Danielle Bass	X	2025-10-05
Neighborhood Board No. 35 Chair Dean Hazama	X	
UTILITIES		
Hawaiian Electric Company, Inc.	X	
Spectrum	X	2025-09-09
Hawaiian Telcom	X	2025-09-16
Hawaiʻi Gas	X	2025-09-15
CITIZEN GROUPS/INDIVIDUALS, OTHER CONSULTED PARTIES		
Mililani Town Association	X	
Town Center of Mililani	X	
The Church of Jesus Christ of Latter-day Saints in Mililani	X	
Mililani-West Oʻahu YMCA	X	
LIBRARIES		
Mililani Public Library	X	
Hawaiʻi State Library - Hawaiʻi Documents Center	X	

1.8.2 Community Outreach

Table 2 below lists the various Community Outreach meetings that have been conducted (or presented at) for the Project. PHAC has held multiple, ongoing meetings with the MHS Principal and DOE Facilities Branch, and also met with MHS Agriculture Teachers in November 2024. SFA conducted three Stakeholder Meetings in November 2024 and two Community Outreach Meetings

in December 2024 and regularly meets with the MHS School Community Council (SCC) and DOE.

Table 2: Community Outreach

Date	# of mtgs	Meeting Description
Oct. 2024	1	Meeting w/ Principal Murphy on future school plans
Oct. 2024	1	Meeting w/ Mililani-Waipiʻo-Melemanu NB 25 Chair
Oct. 2024	1	Project updates and addressed questions at Mililani Mauka/Launani Valley NB 35
Oct. 2024	1	Project updates and addressed questions at Mililani-Waipiʻo-Melemanu NB 25
Nov. 2024	1	Meeting w/ MHS Agriculture Teachers
Nov. 2024	3	Stakeholder Meetings @ MHS
Nov. 2024	1	Meeting w/ Principal Murphy to share plan showing future MHS projects
Nov. 2024	1	Project updates at MHS SCC
Nov. 2024	1	Project updates and addressed questions at Mililani-Waipiʻo-Melemanu NB 25
Dec. 2024	2	Community Outreach Meetings @ MHS
Jan. 2025	1	Project updates at MHS SCC
Jan. 2025	1	Project updates and addressed questions at Mililani Mauka/Launani Valley NB 35
Jan. 2025	1	Project updates and addressed questions at Mililani-Waipiʻo-Melemanu NB 25
Feb. 2025	1	Project updates at MHS SCC
Feb. 2025	1	Project updates and addressed questions at Mililani Mauka/Launani Valley NB 35
Feb. 2025	1	Project updates and addressed questions at Mililani-Waipiʻo-Melemanu NB 25
Mar. 2025	1	Project updates at MHS SCC
Apr. 2025	1	Project updates at MHS SCC
Apr. 2025	1	Project updates and addressed questions at Mililani-Waipiʻo-Melemanu NB 25
Apr. 2025	1	Meeting w/ Mililani-Waipiʻo-Melemanu NB 25 Chair
Apr. 2025	1	Meeting w/ DOE Facilities Branch and architect to coordinate plans for future covered play court
May 2025	1	Project updates and addressed questions at Mililani Mauka/Launani Valley NB 35
May 2025	1	Project updates and addressed questions at Mililani-Waipiʻo-Melemanu NB 25
May 2025	1	Meeting w/ DOE Facilities Branch and architect to coordinate plans for future covered play court
Jun. 2025	1	Project updates and addressed questions at Mililani-Waipiʻo-Melemanu NB 25
Jul. 2025	1	Project updates and addressed questions at Mililani Mauka/Launani Valley NB 35
Jul. 2025	1	Project updates and addressed questions at Mililani-Waipiʻo-Melemanu NB 25
Aug. 2025	1	Project updates and addressed questions at Mililani-Waipiʻo-Melemanu NB 25 - PRESENTATION
Sep. 2025	1	Project updates at MHS SCC
Sep. 2025	1	Project updates and addressed questions at Mililani Mauka/Launani Valley NB 35
Sep. 2025	1	Project updates and addressed questions at Mililani-Waipiʻo-Melemanu NB 25
Nov. 2025	1	Meeting w/ Mililani-Waipiʻo-Melemanu NB 25 Chair
Nov. 2025	1	Project updates at MHS SCC
Nov. 2025	1	Project updates and addressed questions at Mililani Mauka/Launani Valley NB 35

Date	# of mtgs	Meeting Description
Nov. 2025	1	Project updates and addressed questions at Mililani-Waipi‘o-Melemanu NB 25 - PRESENTATION
Jan. 2026	1	Project updates and addressed questions at Mililani-Waipi‘o-Melemanu NB 25
TOTAL:	**39**	

PHAC and SFA have also provided updates and presentations to the two area Neighborhood Boards (NBs) as described in the following sections.

1.8.2.1 Mililani-Waipi‘o-Melemanu Neighborhood Board No. 25

During the pre-Assessment consultation process, the Chair of the Mililani-Waipi‘o-Melemanu Neighborhood Board No. 25 (NB25) wrote:

> *“…Genuine Community Engagement & Transparency*
>
> - *Hold at least two public meetings in Mililani (one during scoping and one on the Draft EA), with clear visuals (site plan, elevations, traffic/parking diagrams), and publish project details, slides, and FAQs online.*
> - *Provide a plain-language project fact sheet summaries of unit count/mix, rent targets by AMI (with an explanation of AMI cost thresholds), parking supply, traffic management, construction schedule, and point-of-contact.”* (Appendix A)

During the pre-Assessment consultation process, the DOE Office of Facilities and Operations wrote:

> *“The Department also encourages the Applicant to actively engage the Mililani community through its neighborhood boards and other community meetings.”* (Appendix A)

PHAC held a public meeting at MHS on November 13, 2024, and provided multiple updates through SFA as project design progressed in 2025.

On August 27, 2025 (prior to the pre-Assessment consultation process), a presentation was made to the NB25. The Project appeared on the NB25 Regular Meeting Agenda as item V.A.: “Environmental Assessment Process for the Mililani High School Teacher Workforce Housing Project – Cheri Nakamura, State School Facilities Authority.” Refer to Appendix B for the agenda and minutes from the meeting. After Ms. Nakamura’s presentation, NB members and the general public asked the following questions or made the following remarks, summarized in *italics* below (from the meeting minutes in Appendix B):

1. *“Project Location and Access: Ka‘apana Aki asked for clarification on the project location and whether it would include the gymnasium parking area. Audrey Awaya explained they would create a new ingress/egress off Meheula Parkway rather than using the existing high school entrance.*

2. *Separation from School: Smart inquired about how the housing would be separated from the high school. Audrey Awaya confirmed they would completely fence the project site with an attractive barrier.*

3. *Community Participation: Gustafson asked how the community could participate in the EA process. Karen Arakawa and Lacey Shimabukuro explained that letters requesting comments would be sent to the Mililani area, and there would be a public comment period when the draft EA is published.*

4. *Housing Affordability: Darsha Lee expressed concern about the pricing for teacher housing. Audrey Awaya responded that they are still redesigning the project and will return with details once the design and analysis are complete.*

5. *Income-Based Pricing: Freed asked if affordability would be based on income rather than real estate prices, noting teacher salaries average $55,000. Audrey Awaya confirmed rents would be based on income according to HUD (Housing and Urban Development) guidelines, with options for teachers to share units to lower costs.*

6. *Parking Impact Concerns for School Events: Kim expressed concerns about the impact of the School Housing Project on parking availability for school events at Mililani High School. He noted that the project area (marked in red on the map) appears to include the parking lot currently used by visitors attending football and volleyball games, which is accessed via the entrance at Anania Drive and Meheula Parkway. Kim wants to see how parking for sports events will be addressed in the final project plans.*

7. *Staff Housing and Amenities: Ka'anehe asked if housing would be for all educational staff and suggested including in-unit laundry facilities. Audrey Awaya confirmed housing would be for all educational staff, and thanked her for the laundry suggestion.*

8. *Traffic Assessment: Chair Bass asked about traffic considerations for the new ingress/egress on Meheula Parkway. Lacey Shimabukuro explained they would conduct a traffic impact assessment with counts at five intersections along Meheula Parkway. Chair Bass also asked how long the surveys will take. Lacey reported that she believes that it'll take several hours at each intersection during the morning and afternoon peaks for about a week.*

9. *Community Outreach: Chair Bass inquired about a dedicated website and outreach for the EA process. Lacey Shimabukuro noted that HiSFA has a website that will post updates, and comments will be directed to their environmental assessment consultant.*

10. *Rental Terms: Robin Nelson asked about the length of rental agreements and the legal basis for restricting housing to educators. Audrey Awaya explained leases would typically be 12-month terms followed by month-to-month, while Cheri Nakamura noted that federal funding requirements would allow preference for educators but not strict restriction.*

11. *Hawaiian Language Teachers: Maka Casson-Fisher suggested including Hawaiian language program teachers in the priority list, noting difficulties finding housing for these educators. The presenters acknowledged this input.*

12. *Addressing Infrastructure Problems: Gustafson asked whether the Environmental Assessment (EA) will address the infrastructure problems with Site B, specifically the $5 million cost to connect sewer lines that was a concern from previous discussions. The project team responded that the EA will address all infrastructure needs of the project, including location and hookup requirements.*

13. *Long-term Occupancy: Ka'apana Aki expressed concerns about potential future occupancy by non-educators and light pollution affecting nearby residential areas. Audrey Awaya clarified the housing is for any teacher, not just new ones, and they're confident demand from educators will fill the units.*

14. *Federal Funding Implications: Smart worried that federal funding requirements would invalidate the purpose of teacher housing. Audrey Awaya explained they plan to use low-income housing tax credits which allow preferences for educators while following federal rules."*

On November 19, 2025, a follow-up presentation was made to NB25. The Project appeared on the NB25 Regular Meeting Agenda as item V.A.: "Update on New Location of Proposed Teacher Workforce Housing Project at Mililani High School Lower Campus (Between Meheula Parkway/Anania Drive and MHS Football Stadium) – State of Hawai'i School Facilities Authority (HiSFA) & Pacific Housing Assistance Corporation." During the presentation, an updated conceptual site plan, project features, and preliminary project renderings were presented. Refer to Appendix B for the agenda from the meeting. As of this writing, the minutes for the November 19, 2025, meeting of NB25 are not yet available on the Neighborhood Commission Office website.

Including the two formal presentations to the NB25 described above, as well as a follow-up presentation to NB25 at its January 28, 2026, monthly meeting, PHAC and SFA provided Project updates and addressed questions at a total of 12 monthly meetings of the NB25 between October 2024 and January 2026 (see Table 2 above and refer to Appendix B for the agendas and minutes from the meetings).

1.8.2.2 Mililani Mauka/Launani Valley Neighborhood Board No. 35

During the pre-Assessment consultation process, the DOE Office of Facilities and Operations wrote:

> *"The Department also encourages the Applicant to actively engage the Mililani community through its neighborhood boards and other community meetings."* (Appendix A)

The PHAC and SFA presented, provided updates, and addressed questions at seven monthly meetings of the Mililani Mauka/Launani Valley Neighborhood Board No. 35 (NB35) between October 2024 and November 2025 (see Table 2 above and refer to Appendix C for the agendas and minutes from the meetings).

1.8.3 Draft EA Public Review

After the Pre-Assessment consultation, the Draft EA was prepared and submitted for publication in the Office of Planning and Sustainable Development (OPSD) Environmental Review Program's

January 23, 2026, issue of *The Environmental Notice*, initiating a statutory 30-day public review and comment period that ended on February 23, 2026. Table 3 below lists the agencies, organizations, and individuals that were sent a notification that the Draft EA was available for public comment. Table 3 also notes which parties provided comments within the statutory 30-day public review period. Written responses were subsequently provided to all comments that had been received during 30-day public review period. Comments and responses have been incorporated into this Final EA and are reproduced in their entirety in Appendix L.

Table 3: List of Draft EA Public Review Comments

Agencies/Organizations/Individuals	Draft EA Publication Notification Sent	Draft EA comment Received (Date)
STATE		
Environmental Review Program (ERP)	X	
Department of Accounting and General Services	X	
Department of Business, Economic Development & Tourism (DBEDT)	X	
DBEDT – Hawai‘i State Energy Office/Strategic Industries Division	X	
DBEDT – Office of Planning and Sustainable Development	X	2026-02-13
Department of Defense	X	2026-02-23
Department of Education	X	2026-02-23
Department of Hawaiian Home Lands	X	
Department of Health (DOH)	X	
DOH – Environmental Health Administration	X	
DOH – Clean Water Branch	X	
DOH – Clean Air Branch		2026-01-26
DOH – Wastewater Branch	X	2026-01-30
Department of Land and Natural Resources (DLNR)	X	
DLNR – Historic Preservation Division	X	
DLNR – Commission on Water Resource Management	X	
DLNR – Engineering Division	X	
DLNR – Land Division	X	
Department of Transportation	X	2026-02-03
Hawai‘i Housing Finance and Development Corporation	X	
Hawai‘i Community Development Authority	X	
Office of Hawaiian Affairs	X	
FEDERAL		
U.S. Army Corps of Engineers	X	
U.S. Fish and Wildlife Service	X	
Federal Emergency Management Agency	X	

Agencies/Organizations/Individuals	Draft EA Publication Notification Sent	Draft EA comment Received (Date)
COUNTY		
Board of Water Supply	X	
Department of Community Services	X	
Department of Design and Construction	X	2026-02-05
Department of Environmental Services	X	2026-02-09
Department of Facility Maintenance	X	2026-02-13
Department of Housing and Land Management	X	
Department of Parks and Recreation	X	
Department of Planning and Permitting	X	2026-02-23
Department of Transportation Services	X	
Oʻahu Transit Services	X	
Honolulu Fire Department	X	2026-01-27
Honolulu Police Department	X	
Office of Climate Change, Sustainability, and Resiliency	X	
Neighborhood Commission Office	X	
ELECTED OFFICIALS		
Governor Josh Green	X	
Lieutenant Governor	X	
Major Rick Blangiardi	X	
State Senator Donovan Dela Cruz (District 17)	X	
State Senator Michelle Kidani (District 18)	X	
State Representative Lauren Matsumoto (District 38)	X	
State Representative Trish La Chica (District 37)	X	
City Councilmember Val Okimoto (District 8)	X	
Neighborhood Board No. 25 Chair Danielle Bass	X	2026-02-23
Neighborhood Board No. 35 Chair Dean Hazama	X	
UTILITIES		
Hawaiian Electric Company, Inc.	X	2026-02-23
Hawaiian Telcom	X	
Spectrum	X	
Hawaiʻi Gas	X	
CITIZEN GROUPS/INDIVIDUALS, OTHER CONSULTED PARTIES		
Mililani Town Association	X	
Town Center of Mililani	X	
The Church of Jesus Christ of Latter-day Saints in Mililani	X	
Mililani-West Oʻahu YMCA	X	
Hawaiʻi State Teachers Association	X	

Agencies/Organizations/Individuals	Draft EA Publication Notification Sent	Draft EA comment Received (Date)
Gustafson, Becky		2026-02-23
Kwan, Carol		2026-01-30
Smart, Mary		2026-02-19
Wellein, Marsha Diane (Akau)		2026-02-11
LIBRARIES		
Mililani Public Library	X	
Hawai‘i State Library - Hawai‘i Documents Center	X	

(This page intentionally left blank.)

2.0 PROJECT DESCRIPTION

This section provides background information and a general description of the proposed Mililani High School Teacher Workforce Housing ("Project").

2.1 BACKGROUND AND NEED FOR THE PROJECT

During the pre-Assessment consultation process, the Chair of NB25 wrote (and provided a similar comment during the Draft EA public comment period):

> *"…**Need, Program, and Equity***
>
> - *Quantify housing demand among teachers and education staff of their preference to live in the Mililani area, and demonstrate that the proposed unit mix (studios, 1-BR, 2-BR) matches local household sizes."* (Appendix A and Appendix L)

The persistent and dire shortage of licensed teachers in Hawai‘i presents a critical challenge to the State's educational objectives. Since 2012, the number of teachers leaving Hawai‘i annually has increased by more than 70%. Substantially more teachers leave the State each year than retire or resign for other reasons. Hawai‘i's housing market plays a significant role in creating an environment that makes it exceedingly difficult to attract qualified educators and retain them in the State.

DOE contracted SMS Research get a better understanding of DOE's current employees' housing situations and preferences with the goal of informing potential housing support initiatives and improving employee retention. The survey was distributed online in April 2024 to all 22,541 salaried DOE employees statewide. A total of 9,668 employees responded, resulting in a 43% response rate. The responses provided a representative sample across the State and by County. A presentation of the survey is attached to this EA as Appendix D.

Housing is a significant challenge for DOE challenge for employees. While 50% of employees experience home ownership, 35% of employees contribute more than 30% of their income for housing. Forty-one percent of employees are "retention risks" (likely to leave DOE employment due to housing costs).

The April 2024 survey further found that the characteristics of those likely to leave their DOE job due to housing costs, included those that do not one a home, work a part-time job (in addition to their DOE position), and had been employed by DOE less than five years.

The survey also found that 74% of employees who are retention risks would be more likely to continue working for DOE if rental housing were available for employees.

Increasing the supply of affordable and workforce housing available for teachers is a well-established mechanism to support teacher retention and recruitment efforts. To that end, the SFA was established under HRS Chapter 302A and is charged with the development, planning, and construction of public-school capital improvement projects.

On July 3, 2023, Governor Josh Green, M.D., signed Act 172, SLH 2023 into law authorizing SFA to partner with public and private entities to develop housing on- or off-campus for teachers and

other educators and staff. Act 172 further authorized SFA to help address the challenges of recruiting and retaining teachers in Hawai‘i by partnering with public and private agencies to develop housing on or off campus for teachers, educators, and staff. Act 172 appropriates funds out of the School Facilities Special Fund to be expended by SFA for the construction of housing and classrooms.

During the pre-Assessment process, State Representative Trish La Chica wrote:

> *“As the State Representative for House District 37 - portions of Mililani Town, Mililani Mauka, Koa Ridge, and Waipi‘o Gentry, I am writing to express my strong support for the proposed Mililani High School Teacher Workforce Housing Project.*
>
> *Affordable housing for teachers and education staff is a pressing need in our community and across Hawai‘i. Every year, we face more than 2,000 teacher shortages, and according to DOE data shared by to our office from a recent survey, Mililani is the #1 most desired community on O‘ahu to live. Too often, talented and dedicated educators leave the profession – or leave our islands altogether – because they cannot afford to live where they work. This project represents a meaningful step toward addressing that challenge by providing stable and affordable housing options directly within the Mililani and surrounding Central Oahu community.*
>
> *By prioritizing licensed teachers, educators, and Department of Education staff, this project will not only help us retain qualified professionals in our classrooms but also strengthen the connection between educators and the families they serve. These are the reasons I introduced and pushed for the passage of HB329, (Act 204) and secured $2 million in funding for this project. This is a very large and important initiative, setting the precedent for all future teacher housing projects across the state. I believe this effort will have a lasting positive impact on Mililani High School and our broader school system.*
>
> *I also want to note that a crosswalk is planned at the intersection of Hikikaulia Street and Meheula Parkway and is currently in the design and planning phase by the City and County of Honolulu Department of Transportation Services. I encourage consideration of this planned improvement as part of the assessment of project impacts and neighborhood connectivity.*
>
> *Mahalo for your work in advancing this important project. I look forward to continuing to support efforts that provide solutions to our housing and education challenges.”* (Appendix A)

During the Draft EA public comment period, the OPSD wrote:

> *“OPSD understands that teacher workforce housing is in high demand. This Project meets this dire need and will be a step in the right direction toward increasing affordable housing.”* (Appendix L)

2.2 PROJECT OBJECTIVES

The objective of this project is to offer new multifamily rental unit options at affordable rents, prioritizing Hawai‘i’s teachers and DOE employees.

2.3 DESCRIPTION OF THE PROJECT

During the pre-Assessment consultation process, the Chair of NB25 wrote (and provided similar comments during the Draft EA public comment period):

*"**…Need, Program, and Equity…***

- *Define rent bands (e.g., ≤60% / 80% / 100% AMI) with monthly rent assumptions compared to typical DOE salaries and take-home pay.*
- *Clarify eligibility, prioritization, and limits (e.g., teachers, probationary teachers, aides, HIDOE staff, others).*
- *Explain how house rules addressing weapons/firearm ownership, alcohol, tobacco, medicinal cannabis, and prohibitions on illegal drug activity will be enforced consistent with fair-housing laws and all applicable public school and State property policies, prohibitions, and statutes.*
- *Specify how the project will ensure teachers receive first priority for units—consistent with the project's purpose—before extending eligibility in a defined "waterfall" order (e.g., teachers, aides, other HIDOE staff). Describe the tenant-priority "waterfall," eligibility verification, fair housing compliance, and an appeals process to maintain this prioritization over time.*

*"**…Site Planning, Safety, and School Operations***

- *Show the precise 1.7-acre footprint, loading zones, and emergency access; coordinate with HFD for apparatus access and turning radii.*
- *Describe separation of student/parent pick-up/drop-off from resident traffic; apply CPTED principles and design (lighting, sightlines, access control).*
- *Provide a school-day/after-hours circulation plan for events (athletic games, concerts/band, community fairs and parades) do not conflict with resident/visitor traffic and parking.*
- *Identify safe walking routes and enhanced crossings to campus, bus stops, the Mililani Town Center, the Mililani Transit Center, and the Mililani Shopping Center; include ADA-compliant paths, curb ramps, and lighting.*
- *Demonstrate that the project's architecture, site plan, materials, colors, massing, and landscaping are compatible with Mililani Town's design standards, aesthetics, and neighborhood character, honoring the community's status as Hawai'i's first master-planned community and the state's only All-America City…*

*"**…Cultural, Historic, and Environmental Resources***

- *Provide a native species and tree protection/replacement plan (canopy no-net-loss).*

*"**…Property Management, Security, and Community Interface***

- *Identify the property manager, staffing model, after-hours security, and house rules (parking, trash, noise, pets).*
- *Provide mail/package management and right-sized waste, recycling, and green-waste enclosures.*
- *Indicate whether a preschool/child-care (e.g., Ready Keiki) is planned on site and who may be eligible…*

*"…**Community Benefits & Mitigation Commitments**…*

- *Consider funding or in-kind support for Safe Routes to School, crosswalk upgrades, traffic calming, increasing shade trees/canopy, and shielded campus security lighting.*
- *Describe ongoing good-neighbor practices for operations, repair/maintenance, and community collaboration by the property management."* (Appendix A)

During the Draft EA public comment period, the Chair of NB25 wrote:

"… Residential Workforce Need, Equity, and Accessibility …

- *Identify the number and location of ADA-compliant units, and ensure full ADA accessibility throughout the multi-story building, including increased elevator access and accessible routes for residents and visitors.*

…Site Planning, Safety, and School Operations…

- *One board member asked, will this affect the weekly Farmers Market at Mililani High School?*

…Property Management, Security, and Community Interface…

- *One board member asked, will there be on-site laundry facilities for the project's residents?"* (Appendix L)

Preliminary plans include 95 one- and two-bedroom units to offer a range of affordability and living options. One unit will be reserved for a resident manager and the Project will provide secured, on-site parking including a loading stall. Refer to Figure 5: Preliminary Site Plan. Amenities may include:

- A fitness center,
- Collaboration spaces for social gatherings and educational workshops,
- A teacher resource room with supplies to help teachers plan classroom activities,
- On-site laundry facilities,
- Green spaces for relaxation and recreation,
- Storage lockers and bicycle and surfboard racks, and
- A dog park and/or garden.

Access to the Project site will be via a proposed new entry drive at an existing curb-cut located on Meheula Parkway, directly across from the driveway to the LDS Church. This new entry drive will provide separate access for Project residents, while the existing access via the driveway to the south of the tennis courts will be for emergency access only. The Project's internal vehicular circulation will be via a looping driveway within the site that is separate from that of the school.

Crime Prevention Through Environmental Design (CPTED) principles will be considered during design. Separation between MHS and the Project will be established by a perimeter fence and secured entries. The Project's property manager will coordinate with the school for events that may have an impact on the housing and its residents. Paths will provide internal circulation for pedestrians and bicyclists and will connect to external networks. The Transportation Impact Analysis Report (TIAR) attached to this EA as Appendix H discusses pedestrian, bicycle, and public transit facilities in the vicinity (see Section 4.2 of this EA). The Mililani Town Association

(MTA) has confirmed with the SFA that State land is beyond the purview of the MTA; however, the developer will consider MTA design rules.

The Project site has eight existing canopy trees, none of which are native species. Existing trees will be impacted by the proposed new construction and will be replaced by native species of shade/canopy trees. As a community benefit, new Project tree replacement quantities will exceed the current tree canopy coverage.

Units will be rented to households earning up to 120% of the Area Median Income (AMI). Information on estimated rents, tenant eligibility and prioritization will be shared separately from the Draft EA when project financing is determined. Income limits by family size and affordable rents by percentage of area median income are established by the U.S. Department of Housing and Urban Development (HUD) and updated each year.

PHAC and SFA will develop a fair equitable process to accommodate as many teachers as possible. The property manager hired by PHAC will manage the applicant pool based on an agreed criterion. If there are more applicants than units available, a lottery will be conducted to place eligible applicants. The property manager will maintain a wait list as well as develop house rules for the Project.

A property management firm has been identified. The preliminary on-site staffing plan includes a live-in manager, compliance/administration, and maintenance staff. After-hours security staff is not planned at this time; however, a perimeter fence, secured parking and building entry, and on-site resident management will be provided. Additional security measures will be considered during operation. A preschool/childcare facility will not be provided onsite due to the reduced size of the Project site.

PHAC will coordinate with property management to develop ongoing good-neighbor practices for operations, repair/maintenance, and community collaboration. The Project's property manager will coordinate with the school for events outside of normal school hours (such as the weekly farmer's market) that may impact the housing and its residents.

The proposed Project will provide a significant community benefit by supplying urgently needed teacher workforce housing to support teacher retention and recruitment efforts.

The number and location of Americans with Disabilities Act (ADA)-compliant units will be determined in the design phase of development. The Project will follow all ADA requirements, and plans will be reviewed and approved by the Disability and Communication Access Board (DCAB) to confirm compliance.

2.3.1 Sustainable Design

During the pre-Assessment consultation process, the Chair of NB25 wrote (and also provided a similar comment during the Draft EA public comment period):

*"…**Utilities, Energy, and Sustainability***

- *Include high-efficiency, preferably all-electric design; PV, solar hot water, high-efficiency HVAC, EV charging, and comprehensive water/energy conservation*

measures (ENERGY STAR/EPA WaterSense certified fixtures, plumbing fixtures, and appliances, whole-building leak detection, and drought-tolerant native landscaping), supporting:

- *HRS §302A-1510 (Public Schools Net-Zero by 2035)*
- *HRS §269-92 (100% renewable energy by 2045)*
- *HRS §174C-31(g)(6) (100% reclaimed water in State/County facilities by 2045)…"* (Appendix A)

During the pre-Assessment consultation process, the State of Hawai'i Department of Transportation (DOT) wrote:

"…Describe strategies to reduce carbon emissions from the project, if any. Suggestions include:

a. *Incorporate elements that encourage and enhance the use of multiple types of transportation to reduce carbon emissions.*
b. *Implement energy-efficient technologies and practices, such as light-emitting diode lighting.*
c. *Use sustainable, recycled, or low-emission materials in construction and manufacturing."* (Appendix A)

The Applicant is committed to responsibly developing a community that is safe for teacher residents and carefully designed to minimize environmental impacts and reduce carbon emissions. The project will meet the SFA's project objective for Sustainable Design and Development Standards by complying with HRS Chapter 196-9 regarding energy efficiency and environmental standards for state facilities. The Applicant will pursue Leadership in Energy and Environmental Design (LEED) for Homes Silver certification under BD+C Multi-family Midrise version 4.0. The LEED rating system, developed by the U.S. Green Building Council, is the foremost program for buildings, homes, and communities that are designed, constructed, maintained, and operated for improved environmental and human health performance. The LEED program also provides transparency through third party verification processes for energy conservation, stormwater management, and carbon footprint reduction strategies.

The Project is planned to utilize solar water heating or other energy-efficient water heating equipment such as heat pumps, energy-efficient lighting fixtures, WaterSensible plumbing products, and Energy Star appliances. Living units will be cooled by natural ventilation through windows and ceiling fans rather than central or individual cooling systems to minimize energy usage. Based on the market research for this Project contracted by PHAC, teachers did not express a need for in-unit air conditioning. Some teachers said they would feel guilty having air conditioning when their students were unable to have it in school and at home. Units will take advantage of natural light and have submeters to ensure that residents are billed for the electricity they use and to encourage energy conservation. During operation, residents will be oriented to energy-saving features and educated about ways to save energy, especially during O'ahu's utility peak demand between 5:00 to 9:00 PM.

The Applicant intends to maximize the number of photovoltaic panels that can be installed with solar panels for the hot water system. The panels will generate clean energy and reduce the amount of energy needed from the Hawaiian Electric Company (HECO) system. Plans also include

Electric Vehicle (EV) charging stations and a car-share service for residents who drive EVs and those who may have a temporary need for a car. While a few EV charging stalls will be provided, the Applicant intends to request an exemption (through the HRS 201H process) from providing the minimum required number of EV stalls under the Land Use Ordinance (LUO).

Future teachers emphasized the importance of a housing project near public transportation. TheBus stops next to the Project and the Park & Ride is located across Meheula Parkway in the Town Center of Mililani. The Project will provide both short-term and long-term bicycle parking to encourage bicycle use by residents.

The following sustainability measures, based on the LEED checklist, are planned to be implemented for the project where feasible:

- Appropriate design, materials selection, and construction practices to save money and resources, while achieving sustainability goals.
- Avoidance of sensitive land such as prime farmland, public parkland, flood hazard areas, wetlands, or endangered species habitats.
- Protection of sensitive ecosystems by completing an early site assessment and planning the locations of buildings and hardscape areas to protect habitat, open space, and water bodies.
- Low-impact development methods to minimize construction pollution, reduce heat island effects and light pollution, and manage stormwater runoff.
- Compact development patterns to conserve land and promote compact communities.
- Utilizing existing infrastructure, services, amenities, and utilities.
- Recognizing existing patterns of development and land density.
- Leveraging existing community resources to enhance the project's accessibility and promote community engagement.
- Erosion controls during construction to minimize long-term environmental damage to the building lot.
- Landscape designed to minimize the use of fertilizers, pesticides, and herbicides and to avoid potential groundwater contamination.
- Avoiding invasive species in landscape design.
- Light-colored materials for walkways to avoid heat island effect.
- Non-toxic pest control measures such as a physical termite barrier system.
- Low-water use faucets, showerheads, toilets and clothes washers, saving valuable potable water resources.
- High-efficiency lighting fixtures and Energy Star appliances, in efforts to lower anticipated resident utility bills and reduce overall energy demand.
- Solar water heating system.
- Insulating hot water pipes and trunk lines for maximum efficiency and to maintain the temperature long enough to provide consistent hot water in the system through multiple uses. This measure minimizes the amount of water wasted before the water gets warm and saves energy used to heat water.
- Ceiling fans and operable windows to utilize local breezes, circulate passive cooling, and save energy and cooling costs.
- Water-resistant flooring in kitchens, bathrooms, and entryways to promote healthy indoor air quality.

- Indoor moisture control measures prevent water damage to building materials from interior water and moisture. Proper moisture management extends the life of a building, reduces maintenance and repairs, and improves indoor environmental quality.
- Bath and kitchen fans to reduce moisture and occupants' exposure to indoor pollutants by exhausting pollutants outside and ventilating with fresh outdoor air.
- CO monitors on each floor to detect any unhealthy levels of carbon monoxide present in the units.
- Reducing occupants' exposure to tobacco smoke by not allowing smoking on the property (or prohibiting smoke except in designated smoking areas at least 25 feet from all entries) with signage properly communicating the smoking policy.
- Selecting flooring, insulation, and paints that reduce exposure to airborne chemical contaminants.
- Promoting socially equitable and engaging communities by offering affordable rental housing units to teachers, educators, and education staff who have a range of economic levels, household sizes, and age groups.
- Installing photovoltaic panels to generate and use renewable energy at the project site.

2.4 PROJECT COST AND IMPLEMENTATION TIMEFRAME

Construction of the proposed Project is anticipated to start upon receipt of an approved building permit and is expected to be completed in three years after receipt of the HRS 201H approval. The estimated development cost is approximately $80 million.

3.0 DESCRIPTION OF THE NATURAL ENVIRONMENT, POTENTIAL IMPACTS, AND MITIGATION MEASURES

This section describes the existing conditions of the physical or natural environment, potential impacts of the Project to the environment, and mitigation measures to minimize impacts.

3.1 CLIMATE

According to Weatherspark, the average monthly low temperatures in Mililani range from 63 to 71 degrees Fahrenheit, while the average monthly high temperatures range from 77 to 84 degrees Fahrenheit, with the coolest temperatures occurring in January and February and the warmest month occurring in August. On average, Mililani experiences the lowest amount of rainfall (averaging 0.4 inches) in June while the maximum average precipitation occurs in January (approximately 2.6 inches). The predominant average hourly wind direction in Mililani is from the east throughout the year. The average of mean hourly wind speeds ranges from 12.3 miles per hour (mph) in January to 16.7 mph in July.

Potential Impacts and Mitigation Measures of the Proposed Project

The proposed Project will be sustainably designed and constructed and is not expected to have any short-term, long-term, direct, indirect, or cumulative impacts on the climate.

3.2 TOPOGRAPHY

The Project site currently contains a paved 48-stall parking lot, and a paved sidewalk connecting the parking lot to the tennis courts (Figure 3: Aerial Image, Figure 4: Site Photos). The Project site contains an embankment along Meheula Parkway such that the main portion of the Project site is approximately 10 feet higher than the elevation of the westbound portion of Meheula Parkway (see Figure 6: Topography). The Project site also slopes downwards towards the north and northwest by 20 feet.

Potential Impacts and Mitigation Measures of the Proposed Project

The proposed Project will be built on graded land where there is a flat portion of the site. Currently, a portion of the Project site is occupied by a paved parking lot. Given the existing flat topography, construction of the proposed Project will have a negligible effect on the topography of the area, it is not expected to have any short-term, long-term, direct, indirect, or cumulative impacts on topography.

3.3 SOILS

Three soil suitability studies prepared for lands in Hawai‘i principally focus on the relative agricultural productivity of different land types. These studies are: 1) the U.S. Department of Agriculture Natural Resources Conservation Service Soil Survey; 2) the University of Hawai‘i Land Study Bureau Detailed Land Classification; and 3) the State Department of Agriculture’s Agricultural Lands of Importance to the State of Hawai‘i.

3.3.1 Natural Resources Conservation Service

As shown on Figure 7: Natural Resources Conservation Service Soil Survey, the *Natural Resources Conservation Service, Soil Survey for the Island of O'ahu* classifies the soil underlying the Project site as Wahiawa silty clay, 3% to 8% slopes (WaB).

3.3.2 Land Study Bureau Detailed Land Classification

The University of Hawai'i Land Study Bureau (LSB) document, *Detailed Land Classification, Island of O'ahu***,** classifies soils based on a productivity rating. Letters indicate class of productivity with A representing the highest class and E the lowest. As shown on Figure 8: Land Study Bureau Detailed Land Classification, the soils of the Project site and MHS are classified "U" or "Urban."

3.3.3 Agricultural Lands of Importance to the State of Hawai'i

The Agricultural Lands of Importance to the State of Hawai'i (ALISH) system classifies important agricultural lands as Prime, Unique, or Other Agricultural Land. The land underlying the Project site is unclassified (Figure 9: Agricultural Lands of Importance to the State of Hawai'i).

Potential Impacts and Mitigation Measures of the Proposed Project

Construction of the proposed Project will not have a deleterious effect on the soil in the Project site. The site has been previously modified to accommodate the existing 48-stall parking lot. The soils underlying the Project site have no capacity to impact the availability of agricultural land for cultivation.

During the Draft EA public review period, the Department of Health (DOH) Clean Air Branch wrote:

> *"If your proposed project…*
> *Has the potential to generate fugitive dust:*
> - *You must reasonably control the generation of all airborne, visible fugitive dust. Note that construction activities that occur near existing residences, businesses, public areas and major thoroughfares exacerbate potential dust concerns. It is recommended that a dust control management plan be developed which identifies and mitigates all activities that may generate airborne, visible fugitive dust. The plan, which does not require Department of Health approval, should help you recognize and minimize potential airborne, visible fugitive dust problems.*
> - *Construction activities must comply with the provisions of Hawaii Administrative Rules, §11- 60.1-33 on Fugitive Dust. In addition, for cases involving mixed land use, it is strongly recommended that buffer zones be established, wherever possible, in order to alleviate potential dust concerns.*
>
> *You must provide reasonable measures to control airborne, visible fugitive dust from the road areas and during the various phases of construction. These measures include, but are not limited to, the following:*
> - *Planning the different phases of construction, focusing on minimizing the amount of airborne, visible fugitive dust-generating materials and activities, centralizing on-site*

vehicular traffic routes, and locating potential dust-generating equipment in areas of the least impact;

- *Providing an adequate water source at the site prior to start-up of construction activities;*
- *Landscaping and providing rapid covering of bare areas, including slopes, starting from the initial grading phase;*
- *Minimizing airborne, visible fugitive dust from shoulders and access roads;*
- *Providing reasonable dust control measures during weekends, after hours, and prior to daily start-up of construction activities; and*
- *Controlling airborne, visible fugitive dust from debris being hauled away from the project site."* (Appendix L)

During the Draft EA public review period, the DOE Office of Facilities and Operations wrote:

> *"The Department will require that a construction management plan be established to minimize noise, dust, and other disruptions, especially during school hours, to avoid interference with student learning and school operations."* (Appendix L)

During grading and construction, there is always the potential for soil erosion and runoff, and the generation of fugitive dust. All construction activities will comply with all applicable federal, state, and county regulations and rules for erosion, sedimentation, and fugitive dust. Contractors will use best management practices (BMPs) to minimize erosion during construction and planting, including watering loose soils during construction, and planting groundcover over areas where construction has been completed, silt fences and other erosion control devices. Additionally, BMPs for stormwater management will be implemented to minimize impacts of the Project to the area's hydrology and existing drainage facilities, while maintaining on-site infiltration and preventing polluted runoff from storm events. These measures will address any direct impacts from construction and avoid any secondary or cumulative impacts from erosion or fugitive dust caused by construction. Following construction, exposed soils will have been built over, paved over or landscaped to control erosion. The estimated disturbed area will be greater than one acre. Therefore, a general National Pollutant Discharge Elimination System (NPDES) Permit for construction activities will be required.

Long-term impacts will be mitigated by the installation of low-impact development (LID) measures to manage stormwater at this site before it is returned to the natural system. Such measures will be designed to manage stormwater in a way that better replicates natural systems, thereby slowing the flow of surface water from the site and reducing pollutants in the process, resulting in improved water quality of the downstream water bodies. No impacts to ground water resources or the ocean are anticipated.

Construction and permanent post-construction BMPs and LID measures will be designed, implemented, and maintained in compliance with the HAR, Title 20, DPP, Chapter 3 – Rules Relating to Water Quality, effective August 16, 2017. Onsite drainage system improvements will be designed in accordance with DPP's Storm Drainage Standards, dated August 2017. See also the discussion in Section 4.6.3 (Drainage System).

3.4 HYDROLOGY

Surface Water
There is no surface water (such as the ocean or streams) that abuts the Project site.

Wetlands
No wetlands occur directly where the Project is proposed to be located (Figure 10: USFWS National Wetlands Inventory). The U.S. Fish and Wildlife Service (USFWS) National Wetlands Inventory indicates that the nearest wetland is a Riverine Wetland habitat (classified as **R4SBCx**), located south and across Meheula Parkway from the proposed Project Site (U.S. Fish and Wildlife Service, n.d.). This wetland is referred to as "Waiāhole Ditch," and it bisects Mililani Town. Immediately west of Kamehameha Highway, Waiāhole Ditch splits into two channels.

Classification code **R4SBCx** stands for:

System **Riverine (R)**: The Riverine System includes all wetlands and deepwater habitats contained within a channel, with two exceptions: (1) wetlands dominated by trees, shrubs, persistent emergents, emergent mosses, or lichens, and (2) habitats with water containing ocean-derived salts of 0.5 ppt or greater. A channel is an open conduit either naturally or artificially created which periodically or continuously contains moving water, or which forms a connecting link between two bodies of standing water.

Subsystem **Intermittent (4)**: This Subsystem includes channels that contain flowing water only part of the year. When the water is not flowing, it may remain in isolated pools or surface water may be absent.

Class **Streambed (SB)**: Includes all wetlands contained within the Intermittent Subsystem of the Riverine System and all channels of the Estuarine System or of the Tidal Subsystem of the Riverine System that are completely dewatered at low tide.

Water Regime **Seasonally Flooded (C)**: Surface water is present for extended periods, especially early in the growing season, but is absent by the end of the growing season in most years. The water table after flooding ceases is variable, extending from saturated to the surface to a water table well below the ground surface.

Special Modifier **Excavated (x)**: This Modifier is used to identify wetland basins or channels that were excavated by humans.

Ground Water
According to the State of Hawai'i's Underground Injection Control (UIC) Program, the Project site is located above (mauka of) the UIC line, which means the underlying aquifer is considered a drinking water source (State of Hawai'i Department of Health, Safe Drinking Water Branch, n.d.).

The Project site is located within the Waipahu-Waiawa Aquifer System (30203) in the Pearl Harbor Aquifer Sector (302). The most recent studies published in the State Department of Land and Natural Resources (DLNR) Commission on Water Resource Management (CWRM) Water Resources Protection Plan indicate that sustainable yield for the Waipahu-Waiawa Aquifer System ranges from 110-117 million gallons per day (MGD). The Waipahu-Waiawa Aquifer System is a basal aquifer and estimates for sustainable yield represent the maximum aquifer pumping rate.

Potential Impacts and Mitigation Measures of the Proposed Project

Construction and operation of the proposed Project is unlikely to have an adverse impact on the nearest surface water resource ("Waiāhole Ditch").

The Project area is 1.975 acres. According to the U.S. Census Bureau, the land area of the Mililani Town Census Designated Place (CDP) is 4.01 square miles or 2,566.4 acres. The Project site represents less than 0.077% of the Mililani Town CDP. The proposed land use (workforce multi-family housing) is not expected to have a significant impact on groundwater resources, compared to other uses such as certain types of agricultural (such as feedlots, pesticide storage), commercial (gas stations), and industrial (storage tanks, toxic and hazardous spills) uses.

3.5 NATURAL HAZARDS

Natural hazards like flooding, tsunami inundation, hurricanes, sea level rise (SLR), earthquakes, and wildfires have historically impacted the Hawaiian Islands. Climate change will also impact the Islands, as will the related SLR.

Flooding
During the pre-Assessment consultation process, the DLNR Engineering Division wrote:

> *"The owner of the project property and/or its representative is responsible for researching the Flood Hazard Zone designation for the project."* (Appendix A)

During the pre-Assessment consultation process, the DPP also wrote:

> *"The Draft EA should identify the subject property's Flood Zone as mapped by the Federal Emergency Management Agency and evaluate the proposed Project's compliance with the City's Flood Hazard Areas Ordinance (ROH Chapter 21A)."* (Appendix A)

As shown on Figure 11: Flood Insurance Rate Map (FIRM), the Project site is located within the Flood Hazard Zone D. Zone D indicates areas with a potentially moderate to high risk of flooding, but the probability has not been determined. Although some federally backed lenders may still require it, in Zone D, there are no mandatory flood insurance requirements. Also, there are no minimum building requirements by Federal Emergency Management Agency (FEMA). However, Zone D indicates that there is a risk of flooding; the level of risk is just unknown. FEMA Firm Panel 15003C0228F, FIRM Index Date and Panel Effective Date of September 30, 2004. Therefore, the Project site is not subject to Revised Ordinances of Honolulu (ROH) Chapter 21A, Flood Hazard Areas.

Tsunami
Since the early 1800s, approximately 85 tsunamis have been reported in Hawai‘i (Hawaii Civil Beat, 2011). Seven caused major damage and two were generated locally. The most recent tsunamis impacting O‘ahu occurred on March 11, 2011, which caused damage to several locations around the island, especially the North Shore, and on July 29, 2025, which caused no major damage.

The entire MHS, including the Project site, is outside of the Tsunami Evacuation Zone and the Extreme Tsunami Evacuation Zone.

Hurricanes
Since 1980, two hurricanes have had a devastating effect on Hawai‘i: Hurricane ‘Iwa in 1982 and Hurricane ‘Iniki in 1992. Long-term prediction of future hurricanes is virtually impossible. However, one should reasonably anticipate the prospect of another hurricane impacting the islands.

Hurricane events may also cause a storm surge, which is an abnormal rise of water generated by a storm, over and above the normal tidal levels. This rise in water level can cause extreme flooding in coastal areas, particularly if a storm surge coincides with a normal high tide (NOAA, n.d.). According to the National Hurricane Storm Surge Hazard Maps, the Project site is not subject to flooding inundation during Category 1, 2, 3, or 4 hurricane events (National Oceanic and Atmospheric Administration (NOAA) National Hurricane Center (NHC), n.d.).

Earthquakes
In Hawai‘i, volcanic activity produces most earthquakes in contrast to other areas sitting on tectonic plate margins. Thousands of earthquakes occur in Hawai‘i each year. However, the vast majority of them are undetectable through normal human senses. A few historical earthquakes have reached moderate and even disastrous magnitudes.

The last major earthquakes felt statewide were magnitudes of 6.7 and 6.0. These earthquakes occurred at Kīholo Bay along Hawai‘i Island’s Kona Coast on October 15, 2006. These earthquakes resulted in more than $100 million in damages to the northwest area of Hawai‘i Island and minimal damage on O‘ahu. From that same event, O‘ahu was also subject to an earthquake induced electrical blackout that paralyzed the city of Honolulu and shut down the Honolulu International Airport for nearly a day.

Sea Level Rise
Sea Level Rise (SLR) is one of the many growing concerns associated with global climate change and can be especially taxing on the limited resources of an island ecosystem.

Mayor Kirk Caldwell’s 2018 directive on climate change and SLR (Directive 18-2) was used as a baseline for the Project Area assessment. Directive 18-2 was created in response to the CCH’s Climate Change Commission’s *Climate Change Brief* and *Sea Level Rise Guidance* as well as the State Climate Change Mitigation and Adaptation Commission’s *Sea Level Rise Vulnerability and Adaptation Report* and Data Viewer. (PacIOOS, Sea Level Rise: Hawai‘i Sea Level Rise Viewer, 2019).

The Climate Change Commission’s *Sea Level Rise Guidance* emphasized that the CCH should be planning for high tide flooding associated with 3.2 feet SLR (in mean higher high water, which is equivalent to 4.28 feet mean sea level (msl)) by mid-century, and, because of continued high global carbon emissions, take into consideration 6 feet SLR (mean higher high water, equivalent to 7.08 feet msl) in later decades of the century, especially for critical infrastructure with long expected lifespans and low-risk tolerance.

Directive 18-2 also strongly encourages independent agencies, City-affiliated entities, and City-related institutions to help advance these efforts and adopt similar initiatives; and requires all city department and agencies under the mayor’s jurisdiction to take several actions, including the following.

- View climate change and the need for both climate change mitigation and adaptation as an urgent matter, and take a proactive approach in both reducing greenhouse gas emissions and protect and prepare the city for the physical and economic impacts of climate change.
- Use the *Sea Level Rise Guidance* and *Hawai'i Sea Level Rise Vulnerability and Adaptation Report* in their planning, programming, and capital improvement decisions to mitigate impacts to infrastructure and critical facilities subject to SLR, which may include elevation or relocation of infrastructure and critical facilities; elevation of surfaces, structures, and utilities; and/or incorporation of other adaptation measures.
- Propose revisions to shoreline rules and regulations to incorporate SLR and conserve a natural, unarmored shoreline whenever possible.
- Work cooperatively to develop and implement land use policies, hazard mitigation actions, and design and construction standards to mitigate and adapt to the impacts of climate change and SLR.

Droughts and Wildfires

Climatic trends which include rising air temperatures, decreasing prevailing northeasterly trade winds, increasing temperatures, and decreasing precipitation are affecting stream base flows which in turn, are predicted to adversely affect aquifer recharge and freshwater availability (University of Hawai'i Sea Grant, 2014). Additionally, scientists have observed that all of the Hawaiian Islands have seen longer periods of drought in recent years. While models predict a variety of effects from changing rainfall patterns, if drought events increase in duration or frequency, there is a likelihood of increased stress to aquifers, and increased likelihood for wildfires.

Potential Impacts and Mitigation Measures of the Proposed Project

During the pre-Assessment consultation process, the Chair of NB25 wrote:

> *"…Public Safety & Emergency Preparedness*
>
> - *Describe how the facility is designed to withstand and remain operational during hazardous events including: hurricanes, Kona low events, earthquakes, other severe wind and precipitation events, flooding, heatwave, wildfire, and drought.*
> - *Provide a site-specific emergency response plan coordinated with MHS administration(lockdown coordination, evacuation routes, shelter-in-place).*
> - *Include clear wayfinding for first responders and ensure redundant access where feasible."* (Appendix A)

The proposed Project is not anticipated to have any impact or any deleterious effects on natural hazard conditions (such as flooding, tsunami, hurricanes, earthquakes, SLR, droughts and wildfires), and the Project will be designed to withstand and remain operational during hazardous events in the following ways:

- **Hurricanes:** The structural design will comply with all local and national building codes, including that for wind design. Continuous tiedown systems and load paths from roof to foundation will be provided as required by code. Impact resistant glazing and/or other measures to protect against wind borne debris can be considered in the design, where required by code.

- **Earthquakes:** The structural design will comply with all local and national building codes, including that for seismic design. It is likely that this Project will be located in a moderate risk seismic area and a code-compliant lateral force resisting system and foundation will be provided in accordance with all codes and design standards.

- **Severe wind and precipitation events**: See comments for the "hurricanes" section above. Regarding potential risks of ponding water on roofs, the roof framing will be designed for some ponding of water as required by code and based on elevations of overflow drains/scuppers. Landscape wind buffers can be integrated if needed and desired.

- **Flooding:** The site is not in a flood zone. As mentioned above, according to the FEMA map number 15003C0228F, the site is in Zone D which is defined as areas of undetermined risk. According to FEMA's description these areas have the possibility of flood hazards but there are no flood hazard analyses conducted to determine probability. The proposed development will increase stormwater runoff due to the additional impervious surfaces. However, the proposed Project site will be graded in such a way as to not adversely impact the new building, adjacent properties or roadways. There is potential to utilize wetland type plant materials if needed.

- **Kona low events:** See "severe wind and precipitation events" and "flooding" events above. Shade canopy trees will be utilized throughout the site.

- **Heatwave:** The Project can utilize a cool roof to minimize solar heat gain associated with the development's structures. Project landscaping will include permeable surfacing with ample shade trees to help cool the site.

- **Wildfire:** The Project will utilize non-combustible exterior cladding and a full building sprinkler system. Resilient, diverse landscapes will be implemented with an emphasis on native species. Gravel maintenance strips will be utilized around all buildings and act as a buffer space between structures and landscaping. The Project will be designed with the intent to remove "ladder fuels", utilizing low level vegetation below tree branching/ canopies. An automated irrigation system ensuring plant health would also serve as a valued fire control component. Irrigated plants and soil are well saturated and the system itself can be operated during a fire event.

- **Drought:** The Project plumbing fixtures will utilize low flow fixtures. The Project will be designed with native drought tolerant plants in the landscape. An automated irrigation system provides a consistent application of water during periods of drought.

At the appropriate stage in the development process, the Project's property manager will work with MHS on a site-specific emergency response plan, since the details of the building have not yet been finalized. Wayfinding signage and evacuation routes will be posted at appropriate locations on the site.

During the Draft EA public comment period, the State of Hawai'i Department of Defense wrote: "*The State of Hawai'i, Department of Defense has no comments to offer at this time."* (Appendix L)

3.6 FLORA & FAUNA

During the pre-Assessment consultation process, the U.S. Fish & Wildlife Service wrote:

> *"The Pacific Island Fish and Wildlife Office (PIFWO) has transitioned to the use of the Information for Planning and Consultation (IPaC) online portal, https://ipac.ecosphere.fws.gov/, for federal action agencies and non-federal agencies or individuals to obtain official species lists, including threatened and endangered species and designated critical habitat in your project area."* (Appendix A)

Instead of relying on the IPaC website, the Applicant contracted AECOS to conduct a botanical survey and terrestrial vertebrates survey of the Project area, and to provide accurate species lists. AECOS's report is attached to this EA as Appendix E and summarized below.

The Project area currently includes a parking lot on the east and a cultivated garden on the west, both surrounded by maintained grassy areas. A fenced garden area comprising Early Polynesian-introduced species and various fruit and vegetable plantings, occupies roughly a third of the Project area. In the parking lot next to the garden, rainbow shower trees are planted on grassed islands. The area of the Project surrounding the parking lot and the garden is dominated by dry Bermuda grass, with several other naturalized species throughout. Cook pines line a slope just outside the northwest edge of the Project area.

Table 1 of Appendix E provides a listing of plants observed in the Project area. A total of 45 plant taxa were recorded during the survey. Among them, four (9% of the total) are species of Early Polynesian introductions and twelve (27% of the total) are ornamental plants that are not naturalized or well-established outside of cultivation. The remaining 29 taxa (36% of the total) are naturalized plants (i.e., grow naturally in the wild) that were introduced to the Hawaiian Islands after 1778. No indigenous or endemic native species were recorded.

A total of eight bird species, representing eight separate families, were recorded during the survey as incidental observations. One indigenous migratory species was recorded, while the remaining species observed were non-native introductions that have become naturalized in Hawai‘i. The avian fauna detected in the vicinity of the survey area are presented in Table 2 of Appendix E.

No sign of Wedge-tailed Shearwater (e.g., feathers, eggs, scat) were observed at the Project site. Wedge-tailed Shearwater would not nest in the Project area, as suitable habitat (littoral vegetation at the coast is not present. The other night-flying Hawaiian seabird species (Hawaiian Petrel, Newell's Shearwater, and Band-rumped Storm-petrel) nest at high elevations in the mountains, precluding nesting disturbance at the Project site.

No terrestrial mammals were observed during our survey. However, trees of suitable height for Hawaiian hoary bat (*Lasiurus semotus*) roosting are scattered throughout the Project area. It is possible that the endangered Hawaiian hoary bat uses resources in the area. This bat species is solitary and rare but has a widespread distribution in Hawai‘i.

Federally delineated Critical Habitat is not present in the Project area.

Potential Impacts and Mitigation Measures of the Proposed Project

Occurrences of four Early Polynesian-introduced flora (*kalo, kī, mai'a* or banana, and *kukui*) are present in the cultivated garden within the Project area. While culturally significant "canoe plants" brought by early Polynesian settlers, these species are all common and their respective populations are abundant outside of the Project area. No plants proposed or listed as threatened or endangered species as set forth in the Endangered Species Act of 1973 as amended were seen in the survey area.

During the pre-Assessment consultation process, the Chair of NB25 wrote: *"…Provide a native species and tree protection/replacement plan (canopy no-net-loss)"* and *"…Consider…increasing shade trees/canopy…"* (Appendix A)

The Project site has eight existing canopy trees, none of which are native species. Existing trees will be impacted by the proposed new construction and will be replaced by native species of shade/canopy trees. New Project tree replacement quantities will exceed the current tree canopy coverage.

No avian species currently listed or proposed for listing under either the federal or State of Hawai'i endangered species statutes were detected during this survey. However, one indigenous migratory species, the Pacific Golden-Plover (Kōlea) was observed. Kōlea spend winters in Hawai'i, usually between August and April, before migrating to Alaska to breed and nest.

During the pre-Assessment consultation process, the Chair of NB25 wrote: *"…Use bird-safe, shielded, warm-spectrum, Dark-Sky-compliant lighting..."* (Appendix A)

It is possible that Hawaiian seabirds may overfly the Project area in small numbers between April and the middle of December each year. Protected seabirds in Hawai'i include Wedge-tailed Shearwater (*Ardenna pacifica*), Hawaiian Petrel (*Pterodroma sandwichensis*), Newell's Shearwater (*Puffinus newelli*), and Band-rumped Storm-Petrel (*Hydrobates castro*). Nocturnally flying seabirds, especially fledglings on their way to sea in the summer and fall, can become disoriented by exterior lighting. Disoriented seabirds may collide with man-made structures or the ground. If not killed outright, dazed or injured birds become targets of opportunity for feral mammals. The primary cause of mortality in these seabird species is predation by alien mammalian species at the nesting colonies. Collision with man-made structures is considered the second most significant cause of mortality for these seabird species in Hawai'i. No suitable nesting habitat exists within or close to the Project area for any of these three seabird species.

To minimize or avoid risks to protected night-flying seabirds by not conducting night-time construction and ensuring that all outdoor lighting is fully shielded.

The removal of trees can temporarily displace individual Hawaiian hoary bats using those trees for roosting. However, the Hawaiian hoary bat uses multiple roosts within a home territory, so the potential disturbance resulting from the removal of vegetation is likely to be minimal. An exception might be during the pupping season, when females carrying their pups may be less able to vacate a roost site if the tree is felled. Further, adult female bats sometimes leave their pups in the roost tree while they forage. Very small pups may be unable to flee a tree that is being felled.

Potential adverse impacts to Hawaiian hoary bat can be avoided or minimized by not clearing woody vegetation taller than 4.6 m (15 ft) between June 1 and September 15, the bat pupping season, and by avoiding the use of barbed wire for fencing.

(This page intentionally left blank.)

4.0 DESCRIPTION OF THE HUMAN ENVIRONMENT, POTENTIAL IMPACTS, AND MITIGATION MEASURES

This section describes the existing conditions of the human environment, potential impacts of the proposed Project, and mitigation measures to minimize any impacts.

4.1 ARCHAEOLOGICAL AND CULTURAL RESOURCES

During the pre-Assessment consultation process, the Chair of NB25 wrote:

"…Cultural, Historic, and Environmental Resources
- *Consult with SHPD and community stakeholders; include archaeological monitoring, if necessary.*
- *Summarize consultation outcomes and mitigation/interpretation commitments…"* (Appendix A)

Pursuant to HRS Chapter 6E, consultation with the Hawai'i State Historic Preservation Division (SHPD) was initiated by Keala Pono Archaeological Consulting LLC on September 11, 2025, with the submittal of Project information on the Hawai'i Cultural Resource Information System (HICRIS). Consultation outcomes are still pending at the time of this writing.

4.1.1 Archaeological Resources

An archaeological pedestrian survey was conducted on September 8, 2025, by Keala Pono. The entire survey can be found in Appendix F. The Project area was visually inspected to determine if any surface cultural resources may be present, and to assess the potential likelihood for subsurface cultural resources to exist. According to the archaeological pedestrian survey:

> *"The project area is primarily composed of two main components: a paved asphalt parking lot, which occupies most of the eastern portion…, and a fenced gardening area located in the western portion…. Along the northern and southern boundaries of the project area are two short, grass-covered hills…. In the northeastern corner of the garden stands a metal storage container, fronted on its east side by a concrete patio with discarded concrete blocks placed at its northeast corner…. At the rear of the container is a corroded metal crate filled with basalt cobble rocks and a metal and wood garden hoe, surrounded by more concrete blocks….*
>
> *Adjacent to the south side of the container are two upright wooden posts, most likely the remnants of telephone poles which have been cut in half…. The corresponding upper halves of these poles were also observed on-site, discarded in a small scrap wood pile near the northeastern corner of the banana tree section of the garden…. In addition to banana trees, the garden also supports the cultivation of other crops, including eggplant, papaya, and squash.*
>
> *In sum, the project area is primarily composed of a paved asphalt parking lot and a gardening area. The metal storage container with a concrete patio with a metal crate positioned at its rear are present within the garden as well as two cut telephone poles. The*

garden currently supports the cultivation of bananas, papayas, squash, and eggplant. Two grass-covered hills are located along the northern and southern boundaries of the project area. Additional vegetation present within the project area are several ornamental trees which dot the parking lot. The surrounding parcels are similarly developed, featuring both constructed and landscaped elements."

Potential Impacts and Mitigation Measures of the Proposed Project

According to the archaeological pedestrian survey:

"No evidence was identified during the pedestrian survey to suggest that any of the observed features are over 50 years old. Consequently, no traditional or historic resources were documented. Given the extent of modern development within the project area, the likelihood of encountering traditional or historic surface features is low. Nonetheless, the potential remains for subsurface features to have survived despite recent disturbances."

In the unlikely event that archaeological resources are discovered during ground-disturbing activity associated with the proposed Project, work will cease in the area of the discovery and SHPD will be contacted pursuant to HAR §13-280-3.

On September 11, 2025, the Project's archaeological consultant, Keala Pono, submitted the HRS Chapter 6E Submittal Form and Project information to SHPD via HICRIS, in order to initiate the HRS Chapter 6E historic review process and consultation with SHPD, and to determine whether an Archaeological Inventory Survey (AIS) would be required. In a letter dated May 12, 2026 (SHPD Project No. 2025PR01031, Doc. No. 2605JG07), and which is attached to this Final EA as Appendix F-1, SHPD wrote:

"Based on the information provided…, ***the SHPD concurs*** *with a project determination of 'No historic properties affected' for the project pursuant to HAR §13-275-7(a)(1). Pursuant to HAR §13-275-7(e), when the SHPD agrees that the action will not affect any significant historic properties, this is the SHPD's written concurrence and HRS 6E-8 historic preservation review ends.*

The SHPD hereby notifies *the SFA, PHAC, DOE, and HHFDC that the HRS Chapter 6E historic preservation review process is concluded for the subject project. The project initiation process may continue."*

4.1.2 Cultural Resources

A Cultural Impact Assessment (CIA) was prepared for the Project by Keala Pono. Subsequent to the publication of the Draft EA, the CIA has been updated to include one more participant. It is attached to this EA as Appendix G and summarized below.

Traditional Settlement Patterns

The cultural-historic information gathered as a part of the CIA demonstrates that the Project area has a rich history and is located within Waipi'o Ahupua'a and the 'Ewa Moku District. Early accounts of the area note the advantageous environments for aquaculture and agriculture. The uniquely spacious coastal plains and bays in the 'Ewa Moku were favorable for building fishponds, while the valley walls were perfect for yams and bananas, and the wide lowlands for lo'i kalo.

Waipiʻo Ahupuaʻa was a prominent center of settlement and activity on Oʻahu before Western contact. Many trails existed in the region, with one located just west of the Project area. This trail was a major north-south trail that went from the Pearl Harbor area to Kawailoa. These trails provided opportunities to access resources and traverse the land.

Hawaiian place names are connected to traditional stories or moʻolelo which preserve their history. Further moʻolelo can be found in the full CIA in Appendix G. The Waipiʻo Ahupuaʻa is important in moʻolelo due to numerous battles that occurred in these plateau lands, particularly around Kīpapa Gulch. The bountiful resources of ʻEwa Moku made the region desirable for aliʻi and many battles occurred between warrior-chiefs of Oʻahu and those invading from Hawaiʻi. The moʻolelo of Kanekauʻana immortalizes the importance of aquaculture in ʻEwa; detailing the construction of Waikau Heiau by the descendants of Kanekuaʻana and the offerings left to receive her blessings in times of fish scarcity (Kamakau 1991:83). The boundaries of ʻEwa are linked to the story of the gods Kāne and Kanaloa, who looked out onto the plains from what is now Red Hill, and marked the boundaries of ʻEwa by throwing stones. Since they found the land so beautiful, they threw their stones as far as the Waiʻanae Mountain Range (Nawaʻa in Sterling and Summers 1978:1).

Late Historic Era

Hawaiʻi entered the global trade market in the later 18th and early 19th centuries. ʻEwa was a key source of sandalwood. In the 1830's cattle ranching reached the uplands of Waipiʻo, with the establishment of ranches such as Līhuʻe Ranch. Unrestricted cattle grazing scared residents and destroyed gardens (Judd 1933). The sandalwood trade and introduction of cattle devastated forests; dramatically altering the uplands.

In the late 19th century, with the decline of the Native Hawaiian population and dropping demand for taro (Chong 1998), Chinese laborers began acquiring large pieces of land to convert to rice paddies (Damon 1882 in Coulter and Chun 1937:20). Pineapple and sugarcane cultivation started in Waipiʻo soon after. In 1906, the Oʻahu Railway and Land Company (OR&L), which served to connect the northern and western Oʻahu sugar mills with the port, extended their railway from Waipahu to Wahiawā, further supporting the growth of the pineapple and sugarcane industries (Treiber 2003:9). Schofield Barracks and Wheeler Army Airfield were established in the region and the railroad served as military transport during World War II. However, by the mid-20th century, most OR&L tracks were abandoned for trucking and roadways (Treiber 2003:11), and much of Waipiʻo Ahupuaʻa was dominated by pineapple and sugarcane cultivation. Postwar shifting markets and urbanization replaced agriculture in ʻEwa with large scale residential developments like Miliani Town.

Previous Archaeological Studies

Previous studies have not identified any traditional sites within the immediate Project area. Historic plantation-era flume remnants of the Waiāhole Ditch System were recorded east of the current Project area. Additionally, the nearby Mililani Waena Elementary School campus, located northeast, was recognized as a representative example of Oʻahu school development during the postwar era. The current Project area is a built environment that has undergone extensive previous disturbance in historic and modern times. It is not likely that any surface archaeological features remain. Nevertheless, it is possible that cultural materials, features, and/or deposits could be found in a subsurface context on the property.

Ethnographic Study

As a part of the CIA, three interviews were conducted with individuals knowledgeable about the history of the area, and traditional practices and beliefs. The interviewees identified a variety of cultural sites and practices and natural resources in the Waipi‘o region. Cultural sites in the region include the Kūkaniloko complex, the home of John Papa ‘Ī‘ī, and the ‘Ī‘ī family burial ground. There were no known cultural sites within the proposed Project area although each of the interviewees drew attention to historical events such as the nearby Battle of Kīpapa that heighten the potential for iwi kūpuna to be found. Current cultural practices within the area surrounding the proposed Project are limited due to the extensive historic land-use changes and reduced numbers of native plants. However, MHS students participate in cultural practices by cultivating food crops, gathering ti, and making imu.

Potential Impacts and Mitigation Measures of the Proposed Project

Interviewees corroborated that the main impacts of the proposed improvements will depend on the extent that it displaces pre-existing student programs. According to the interviewees, the Project has the potential to have a positive effect on cultural practices if it can incorporate native plants into landscape design and incorporate Hawaiian cultural knowledge into the design of the housing. There is the potential to encounter iwi kūpuna or cultural artifacts during ground disturbance.

Interviewees expressed general support for the Project and understood the need for teacher housing but had some concerns, which included:

- Declining connections between students and the cultural history and landscape of Mililani;
- Ground disturbance may encounter iwi kūpuna and artifacts; and
- Potential impact on agricultural and gathering activities of students and community members.

The interviewees felt that the Project has the potential to have a positive effect if cultural knowledge is incorporated into the housing design. Their recommendations were to:

1. Follow cultural protocols and repatriation if any iwi kūpuna or artifacts are encountered;
2. Have cultural monitors present during ground disturbing activities;
3. Incorporate the cultural identity and rich history of Mililani into the building designs;
4. Include native plants into landscaping and project design;
5. Expand agricultural spaces and programs; and
6. Continue to have open conversations with community members and follow recommendations that are shared.

The Project is not anticipated to have an impact on pre-existing student programs or on agricultural and gathering activities of students and community members, since no student programs – including the agricultural program – are currently located at the Project site. As such, the Project does not include plans to expand agricultural spaces and programs as recommended by the interviewees in #5 above. The other recommendations will be implemented to the extent possible and feasible.

4.2 TRANSPORTATION

During the pre-Assessment consultation process, the DOT wrote:

1. *"Based the project information provided, the HDOT anticipates a potential indirect adverse impact to the HDOT highways. The EA should include a Traffic Impact Analysis Report (TIAR) prepared and stamped by a licensed engineer…*

3. *Describe strategies to reduce carbon emissions from the project, if any. Suggestions include:*

    a. *Incorporate elements that encourage and enhance the use of multiple types of transportation to reduce carbon emissions..."* (Appendix A)

During the pre-Assessment consultation process, the DTS wrote:

> *"The applicant should perform a TIA to examine the vehicle, pedestrian, bicycle, and public transit safety, stress, and comfort levels at the nearby intersections and driveways with corresponding improvements to mitigate these impacts by applying Complete Streets principles. The applicant shall discuss the future year growth rate, trip distribution, mode split, and route assignment assumptions used in the TIA."* (Appendix A)

During the pre-Assessment consultation process, the Chair of NB25 wrote:

> *"…Traffic, Parking, and Mobility (Peak-Sensitive)*
>
> - *Prepare a Traffic Impact Analysis using current counts collected during the school year (AM/PM peaks and pedestrian access and peaks). Evaluate, at a minimum, Mehe'ula Parkway, Anania Drive, the MHS access drives, and the Mililani Post Office area, as well as the Mehe'ula Pkwy/Kamehameha Hwy and Mehe'ula Pkwy/Anania Dr intersections, and U-turn movements on Mehe'ula Pkwy.*
>
> - *Analyze AM/PM peaks, athletics (football, baseball, soccer, softball, etc.), stadium/gym events, community fairs, and weekends; include on-campus queueing.*
>
> - *Study parking demands differentiating residents, guests, staff, and school/event users; evaluating shared-parking strategies with enforceable management (permits, time limits).*
>
> - *Include multimodal transportation opportunities (transit incentives, secure bike storage, car-share stalls, unbundled parking, etc.)."* (Appendix A)

During the Draft EA public review period, the DOH Clean Air Branch wrote:

> *"If your proposed project… Increases the population and potential number of vehicles in an area:*
>
> - *The creation of apartment buildings, complexes, and residential communities may increase the overall population in an area. Increasing the population in an area may inadvertently lead to more air pollution via vehicle exhaust. Vehicle exhaust releases*

pollutants in the air that can negatively impact human health and air quality, including lung irritants, carcinogens, and greenhouse gases.

- *Ensure that drivers keep vehicle idling times to three (3) minutes or less.*
- *Consider and incorporate support for alternative transportation options such as bike racks and/or electric vehicle charging stations where possible."* (Appendix L)

During the Draft EA public review period, the DOT Highways Division commented:

"HDOT Highways has no comments on the DEA." (Appendix L)

During the Draft EA public comment period, the OPSD wrote:

"The Project should consider how to promote alternative transportation with a multimodal approach. This site is within a 10-minute walking distance from the Mililani Transit Center; thus, this Project should encourage teachers and DOE employees to take advantage of the proximity and use public transportation when possible. The transportation impact assessment points out there are roughly 78 vehicles (40 outbound during the AM peak and 38 inbound during the PM peak) that will be going in and out during peak hours. A goal should be to minimize vehicular use during peak hours. Internal pedestrian/bicycle circulation and facilities should be thoughtfully developed for the Project site. This would involve proper multi-use paths that do not require pedestrians to interact with cars, and crosswalks at conflict points. Internal circulation networks should be substantially connected to external networks. Additionally, a parking structure would be a more efficient use of land as an alternative to surface parking and would create an environment that is not so autocentric." (Appendix L)

AECOM Technical Services, Inc. (AECOM) prepared a TIAR, which is summarized below and attached as Appendix H.

During the Draft EA public comment period, the DPP wrote:

"The following is a list of recommendations to shore up gaps in the January 2026 TIAR:

a. *Before submitting building permits (BP), a timeline or phasing plan of the anticipated dates to obtain major BPs for construction work must be submitted. The timeline should identify when the construction management plan (CMP), the traffic management plan (TMP), and updates and/or validation to the findings of the initial TIAR will be submitted for review and approval.*

b. *The CMP should identify the type, frequency, and routing of heavy trucks and construction-related vehicles.*

c. *A TMP should be prepared in an effort to minimize the number of vehicle trips for daily activities by residents. The TMP should propose traffic demand management (TDM) strategies, such as carpooling, ride sharing, public transit, and bicycle incentives.*

d. *Updates to the TIAR will be required one year after the issuance of the certificate of occupancy, to validate the traffic projections, trip reduction rates, distribution, and assignment contained in the initial TIAR. If additional traffic mitigation measures or modifications are necessary to address traffic impacts directly attributable to this development, the applicant will be required to implement them. The TIAR updates should also include an evaluation of the relative effectiveness of the TDM strategies, making sure that the trip reduction rates are valid.*

e. *Construction plans for all work within or affecting the public streets should be submitted for review and approval. The Traffic control plans during construction should also be submitted for review and approval."* (Appendix L)

As required by DPP, the TIAR will be updated one year after the issuance of the certificate of occupancy, to validate the traffic projections, trip reduction rates, distribution, and assignment contained in the initial TIAR.

4.2.1 Roadways and Traffic

The key roadways in the vicinity of the proposed MHS Teacher Workforce Housing include the following: Meheula Parkway and Kamehameha Highway, which serve as the primary access and main circulation roadways, while Anania Drive, Makaʻimoʻimo Street, Hoʻokelewaʻa Street, and Lanikūhana Avenue all primarily serve as local roads.

Roadway Descriptions

Meheula Parkway – Meheula Parkway is an arterial roadway running east-west through the area, connecting the Town Center of Mililani, Walmart, and nearby residential neighborhoods. It is a four-lane roadway with two lanes in each direction, and a curb and gutter on both sides of the road. The posted speed limit is 25 mph and is under multiple jurisdictions for each segment of the road.

Kamehameha Highway – Kamehameha Highway (Route 99) is an arterial roadway running north-south through Mililani and located to the west of the Project location. It is a four-lane, divided roadway, with two lanes in each direction connecting Mililani to Wahiawā to the north and Pearl City to the south. The highway is under State jurisdiction and has a posted speed limit of 35 mph.

Lanikūhana Avenue – Lanikūhana Avenue is a CCH-owned arterial roadway that runs along the east side of the Town Center of Mililani and connects residential neighborhoods to key commercial, recreational, and community destinations by linking Meheula Parkway and Kamehameha Highway. It is also a four-lane, divided roadway with two lanes in either direction. There are curb and gutter segments along both sides of the roadway, and the posted speed limit is 25 mph.

Anania Drive – Anania Drive is a residential connector road located to the south of the MHS campus, linking residential areas to major routes like Meheula Parkway and Lanikūhana Avenue. It is a two-lane, undivided roadway with one lane in each direction that runs north-south with curb and gutters along both sides of the road. Anania Drive is under CCH jurisdiction. The road has a posted speed limit of 25 mph and has on-street marked parallel parking.

Maka'imo'imo Street – Maka'imo'imo Street is a residential and commercial connector roadway located south of MHS and is adjacent to the Town Center of Mililani and residential neighborhoods. It is a two-lane, undivided roadway with one lane in each direction that runs north-south, with curb and gutters along the whole roadway. Maka'imo'imo Street is under CCH jurisdiction. The road has a posted speed limit is 25 mph and has on-street parking on both sides of the road.

Intersections Studied

The intersections that were studied as a part of the TIAR include the following five intersections (see Appendix H):

- Kamehameha Highway and Meheula Parkway;
- Meheula Parkway and the LDS Church driveway;
- Meheula Parkway and Anania Drive;
- Meheula Parkway and Maka'imo'imo Street; and
- Meheula Parkway and Ho'okelewa'a Street/Lanikūhana Avenue.

During the Draft EA public comment period, the Chair of NB25 wrote:

> *"Board members requested:*
>
> 1. *Clarification, revision, and expanded traffic impact analysis for the following intersections, including, but not limited do* [sic]*:*
>   *o The uncontrolled Meheula Parkway intersection (between Anania and Kamehameha Highway)*
>   *o Meheula Parkway / Kamehameha Highway*
>   *o Anania Drive / Meheula Parkway*
>   *o Makaimoimo Street / Meheula Parkway*
> 2. *Updated traffic counts and incorporation of more recent and robust data into the traffic impact analysis.*
> 3. *Review of U-turn volumes at the uncontrolled Meheula Parkway intersection near the proposed Project driveway location. …*
> 7. *Expanded analysis of AM/PM peak conditions, athletic events, stadium/gym events, community events, weekends, and on-campus queueing."* (Appendix L)

During the Draft EA public comment period, the DOE Office of Facilities and Operations wrote:

> *"The Department requests an addendum to specifically analyze: … U-turns … along Meheula Parkway."* (Appendix L)

Existing Intersection Operations

Based on the traffic counts the morning (AM) and afternoon (PM) peak hours were found to occur from 7:15 to 8:15 AM and 4:00 to 5:00 PM. The Anania Drive and LDS Church driveway intersections were observed midday to capture school-related traffic. The midday peak was observed to occur from 12:45 to 1:45 PM.

The U-turns at the LDS Church's driveway were counted during the data collection period for the TIAR. At the intersection with the LDS Church's driveway, it was observed that there were 4 U-turns during the second highest AM peak hour and 17 U-turns during the second highest PM peak hour. The TIAR has been updated to include the U-turn volumes at the uncontrolled Meheula Parkway intersection between Anania Drive and Kamehameha Highway. The updated TIAR is attached to the Final EA as Appendix H.

Traffic signal control and stop control schemes were used to evaluate the intersections to determine any potential impacts resulting from the proposed MHS Teacher Workforce Housing.

For the intersections, traffic operational analyses were conducted using Synchro/SimTraffic 12.0 in accordance with procedures outlined in the Highway Capacity Manual (HCM).

Operating conditions at an intersection by approach are expressed as a qualitative measure known as Level of Service (LOS) ranging from A to F. LOS A represents operations with low vehicular delay, while LOS F represents conditions with relatively high vehicular delay. The overall intersection LOS is a weighted average of the LOS of individual traffic movement groups.

Table 4 summarizes the existing (Year 2025) intersection LOS and delay results for the second highest AM and PM peak hours. The AM and PM existing traffic volumes are more conservative than the midday traffic volumes and were the volumes used for the remainder of the analysis.

Table 4: Existing Intersection Operations (LOS)

Intersection LOS and Delay	AM Peak Hour		PM Peak Hour	
	Delay (sec/veh)	LOS	Delay (sec/veh)	LOS
Meheula Pkwy & Kamehameha Hwy	44.8	D	32.0	C
Meheula Pkwy & The Church of Jesus Christ of Latter-day Saints Dwy*				
Meheula Pkwy WB LT	10.0	B	0.0	A
LDS Church Dwy LT/RT	21.5	C	18.9	C
Meheula Pkwy & Anania Dr/MHS Dwy	28.9	C	19.6	B
Meheula Pkwy & Makaʻimoʻimo St/MHS Dwy	30.5	C	38.7	D
Meheula Pkwy & Lanikūhana Ave/Hoʻokelewaʻa St	41.7	D	38.4	D

Notes: AM 2nd Peak Hour: 7:30-8:30 AM, PM 2nd Peak Hour: 4:30-5:30 PM
sec/veh = seconds per vehicle, LOS = Level of Service. Pkwy = Parkway, Hwy = Highway, Dr = Drive, Dwy = Driveway, St = Street, Ave = Avenue
* Indicates an unsignalized intersection

As shown in Table 4 above, all of the overall intersections or key-turning movements operate at LOS D or better, which is an acceptable level of service during both peak hour periods. The Kamehameha Highway intersection currently operates at a LOS D during the AM and LOS C

during the PM peak hour periods. The turning movement from the LDS Church's driveway intersection operates at LOS C during the AM and LOS B during the PM peak hour periods. The left turn movement from Meheula Parkway into the LDS Church operates at LOS B during the AM and at LOS A during the PM peak hour periods. The Anania Drive intersection currently operates at a LOS C during the AM peak hour and at LOS B during the PM peak hour. The Maka'imo'imo Street intersection currently operates at a LOS C and a LOS D during the AM and PM peak hour periods, respectively. Finally, Lanikūhana Avenue currently operates at a LOS D during AM and PM peak hour periods. The results from the analysis are consistent with what was observed during data collection. It was observed that the LDS Church's driveway/Meheula Parkway intersection did not have any vehicles enter the LDS Church's driveway during the PM peak periods, which is reflected in the calculated delay from Synchro.

Potential Impacts and Mitigation Measures of the Proposed Project

Future Roadway Conditions – For the purposes of the TIAR, it was assumed that there would not be any major changes to the roads in the vicinity of the proposed developments. No upcoming roadway projects were listed in the vicinity of the development on CCH and the DOT websites.

Future Intersection Conditions – Upon reviewing the projects in the surrounding area, there is one project related to intersection improvements in the study area. This project is the Traffic Signal Modernization at Various Locations, O'ahu Phase 4A, which includes the intersection of Meheula Parkway and Kamehameha Highway. The project scope includes the replacement of traffic signal pullboxes, traffic signal poles, pedestrian pushbuttons, loop detectors, and for the various traffic signal cables needed. While not directly related to the Project access, the improvements will be beneficial for future residents.

Projected Year 2030 Peak Hour Background Traffic – Background traffic accounts for the growth in traffic unrelated to the proposed Teacher Workforce Housing development. According to the SFA webpage, the tenants are projected to move in during 2029. For the purpose of this study, it is assumed that a full build out with residents moved in will occur in 2030, which is five years from the data collection period. The future background traffic was grown and projected out to the Year 2030 and will be used for all of the future traffic analyses.

On Meheula Parkway, there is an existing DOT traffic count station near the intersection with Lanikūhana Avenue. Using the count station data from 2015 and 2019, a growth rate for the area was determined using annual average daily traffic (AADT) volumes between the two years. When the growth rate was calculated using these volumes, a 0.6% growth rate was obtained. This growth rate was applied globally for all movements at each of the intersections with the exception for any turning movement entering or exiting from MHS. The traffic count station worksheets are included in Appendix C of the TIAR.

Vehicular Trips Generated by the Project – Table 5 summarizes the land use and estimated vehicular volumes that would be generated by the proposed MHS Teacher Workforce Housing development. The vehicular volume is based on the trip generation rates documented in the Institute of Transportation Engineers (ITE) publication, *Trip Generation, 11th Edition*. Equations for the AM and PM peak hours of adjacent street traffic periods were used in this estimation.

Trip generation equations for Category 220 – Multifamily Housing (Low-Rise) were used to estimate the vehicular traffic generated by the proposed development. The index used as the

predictor of generated traffic was the number of dwelling units. Due to the purpose of the housing, an assumption was made that a small percentage of the trips generated from the site would be headed toward MHS. It was assumed that approximately 5% of the generated trips would be bound toward MHS and would not access the surrounding roadway network.

Table 5: Projected Trip Generation by Mililani High School Teacher Workforce Housing

Land Use	Intensity	ITE Category	AM Peak Hour		PM Peak Hour	
			In	Out	In	Out
Multifamily Housing (Low-Rise)	94 Dwelling Units (DU)	220	12	40	38	23
Internal Capture			0	2	1	2
Total			12	38	37	21

Notes: AM and PM Peak Hour traffic volumes are in vehicles per hour. Trip Generation is the estimation of vehicular traffic based on equations documented in the Institute of Transportation Engineers' publication, Trip Generation, 11th Edition.

For Category 220 - Multifamily Housing (Low-Rise), the trip generation equations are:
AM Peak Hour: T = 0.31(X) + 22.85 (24% Enter/76% Exit)
PM Peak Hour: T = 0.43(X) +20.55 (63% Enter/37% Exit)
where T = traffic volume (vehicles per hour) and X = number of dwelling units

The proposed Teacher Workforce Housing is projected to generate 52 vehicles per hour (vph) during the AM peak hour and 61 trips during the PM peak hour. This analysis assumed that a small percentage of these trips would be bound for MHS and would not access the surrounding roadway network. The analysis assumed that the trips would be distributed using similar travel patterns as the existing traffic. The directional splits were determined using the inbound and outbound volumes along Meheula Parkway at the Lanikūhana Avenue and Kamehameha Highway intersections.

Projected Year 2030 Peak Hour Intersection Operations – The projected Year 2030 peak hour traffic volumes with (build) and without (no build) the proposed Project were evaluated using the same methodologies with Synchro/SimTraffic analysis software. Table 6 and Table 7 summarize the results of the analysis for the AM peak hour conditions and the PM peak hour conditions, respectively.

Table 6: Future Year 2030 AM Peak Hour Intersection Operations (LOS)

Intersection LOS and Delay	No Build		Build	
	Delay (sec/veh)	LOS	Delay (sec/veh)	LOS
Meheula Pkwy & Kamehameha Hwy	47.5	D	48.4	D
Meheula Pkwy & The Church of Jesus Christ of Latter-day Saints Dwy*				
Meheula Pkwy WB LT	10.2	B	10.2	B
Meheula Pkwy EB LT	-	-	9.5	A
LDS Church Dwy LT/RT	23.5	C	30.2	D
Proposed Dwy LT/RT	-	-	34.6	D
Meheula Pkwy & Anania Dr/MHS Dwy	30.4	C	30.7	C
Meheula Pkwy & Makaʻimoʻimo St/MHS Dwy	32.6	C	33.5	C
Meheula Pkwy & Lanikūhana Ave/Hoʻokelewaʻa St	46.4	D	47.0	D

Notes: AM 2nd Peak Hour: 07:30-08:30 AM, PM 2nd Peak Hour: 4:30-5:30 PM
sec/veh = seconds per vehicle, LOS = Level of Service. Pkwy = Parkway, Hwy = Highway, Dr = Drive, Dwy = Driveway, St = Street, Ave = Avenue
* Indicates an unsignalized intersection

Table 7: Future Year 2030 PM Peak Hour Intersection Operations (LOS)

Intersection LOS and Delay	No Build		Build	
	Delay (sec/veh)	LOS	Delay (sec/veh)	LOS
Meheula Pkwy & Kamehameha Hwy	33.8	C	34.8	C
Meheula Pkwy & The Church of Jesus Christ of Latter-day Saints Dwy*				
Meheula Pkwy WB LT	0.0	A	0.0	A
Meheula Pkwy EB LT	-	-	9.1	A
LDS Church Dwy LT/RT	19.7	C	25.0	D
Proposed Dwy LT/RT	-	-	17.7	C
Meheula Pkwy & Anania Dr/MHS Dwy	20.0	B	20.1	C
Meheula Pkwy & Makaʻimoʻimo St/MHS Dwy	41.2	D	41.4	D
Meheula Pkwy & Lanikūhana Ave/Hoʻokelewaʻa St	40.8	D	41.1	D

Notes: AM 2nd Peak Hour: 07:30-08:30 AM, PM 2nd Peak Hour: 4:30-5:30 PM
sec/veh = seconds per vehicle, LOS = Level of Service. Pkwy = Parkway, Hwy = Highway, Dr = Drive, Dwy = Driveway, St = Street, Ave = Avenue
* Indicates an unsignalized intersection

As shown in Table 6 and Table 7, the intersection movements are projected to operate with a LOS D or better under both the build and no build scenarios in both peak hour periods. The projected delays and LOS are very similar with both scenarios. There is an increase in delay from vehicles turning out of the LDS Church driveway from LOS C to LOS D after the proposed Project driveway is functioning. While the LOS does increase after the Project opens, there was not much traffic volume that accessed the LDS Church during the peak hour periods and the LOS is generally still acceptable during the peak hour periods. The other intersections had a minimal impact on delay and LOS after the Project-generated traffic was added to the roadway network. The future intersection analysis indicates that the roadway network around the Project site would be able to handle the additional traffic and operate at an acceptable LOS during the peak hour periods. TDM strategies are recommended to encourage other modes of transportation to potentially reduce auto trips from the Project site.

The additional traffic generated by the proposed Teacher Workforce Housing site is projected to have a minimal impact on the peak period intersection operations for the surrounding intersections. The analysis indicated that there was very little change to the delay and LOS between the build and no build scenarios with all intersections or key turning movements operating at a LOS D or better.

The Project is thus not expected to have a significant impact on existing traffic and roadways. The Teacher Workforce Housing will provide urgently needed teacher workforce housing in Mililani while also reducing reliance on personal automobiles to commute to work, since some of the future

residents of the Project will be able to walk or take public transportation to work. The proximity of the development to The Town Center of Mililani and Mililani Shopping Center will likely also reduce potential automobile trips in favor of walking, biking, or busing. There are plans to include a fitness center and courtyard to provide residents with recreation opportunities on site, which could also reduce automobile trips. Additionally, the proposed Project has plans to include bike storage and pedestrian walkways throughout the site, and it is located near a bus stop, which will further incentivize alternative modes of transportation and mitigate impacts on roadways.

Recommendations:

Based on the results of the operations analysis described in the TIAR, AECOM provides the following recommendations:

Vehicular Access – At the current intersection with the LDS Church driveway, there is currently a left-turn lane available that is striped out to not be an active lane and a curb cut that could be converted to the project driveway. During the Project, the roadway striping should be modified to activate the left-turn lane from Meheula Parkway into the Project driveway. The Project driveway should be installed with one lane for the entering traffic and one lane for the exiting traffic, which would allow a left turn from the Project driveway onto Meheula Parkway.

It is recommended that STOP-sign-controlled access be installed at the Project driveway. The intersection operates at an acceptable level for the peak hour period with just STOP-sign control at the driveway. The proposed development did not generate enough traffic to consider looking at a traffic signal for the driveway. The line of sight around the Project driveway should be maintained. A crosswalk across the driveway and ADA-compliant curb ramps should be installed. The Project should also consider future changes to the surrounding area such as upgrades to the bicycle facilities.

During the Draft EA public comment period, the DOE Office of Facilities and Operations wrote:

> *"The Department recognizes that the DEA committed considerable amount of time and resources to study the issue of traffic and its impact on school operations, as well as the community at large. Increasing congestion along Meheula Parkway and the loss of existing parking spaces will substantially affect access for MHS students and staff. The DEA's Traffic Impact Analysis Report (TIAR) shows that five intersections along Meheula Parkway were evaluated, with intersection levels of service remaining at LOS C-D under 2030 build conditions. The Project proposes a new independent driveway off Meheula Parkway. The Department requests that the Project developer provide that transition be STOP-controlled, with the Americans with Disabilities Act (ADA) compliant paths, curb ramps with sufficient lighting and a crosswalk to ensure safe walking routes and enhanced crossings to campus, and bus stops."* (Appendix L)

During the Draft EA public comment period, the DPP wrote:

> *f. "The minimum driveway width for two-way traffic is 20 feet. Adequate vehicular sight distance must be provided and maintained at all driveways to pedestrians and other vehicles. Driveway grades shall not exceed five percent for a minimum distance of 25 feet from the back of the designated pedestrian walkway….*

j. The left turn lane from Meheula Parkway to the Project site should meet all applicable standards. All turning movements should be analyzed and any modifications to the existing median to be done to provide for all movements as needed." (Appendix L)

During the Draft EA public comment period, the Chair of NB25 wrote:

"Board members and community members expressed significant concerns that adding left turns from the Project's driveway apron onto eastbound Meheula Parkway—may increase congestion and collision risk at this already uncontrolled intersection.

Board members requested: …

4. *Confirming with the project's traffic engineering consultant, AECOM, if the projected volume of traffic from the proposed Project warrants installation of traffic signals (the draft traffic impact analysis report noted that it did not).*
5. *Request formal review from:*
   - *The City Department of Transportation Services, as the uncontrolled intersection is approximately 420 feet from the Anania Drive/Meheula Parkway intersection; and*
   - *The State Department of Transportation, as the uncontrolled intersection is approximately 770 feet from the Meheula Parkway/Kamehameha Highway intersection.*

   If signalization is not recommended by the State & County transportation agencies, provide written mitigation recommendations and plan for alternative traffic control measures." (Appendix L)

The project's traffic engineering consultant, AECOM, has updated the TIAR to include the following recommendations (see Appendix H):

"The proposed project intersection would not warrant the installation of a traffic signal based on Warrant 3, Peak Hour, the projected peak hour volumes on Meheula Parkway and the project driveway fall well below the threshold volumes required for Warrant 3. While a full traffic signal warrant analysis should be completed after the project is completed if a traffic signal is desired, the projected volumes likely would not meet Warrant 1, Eight-Hour Vehicular Volume, or Warrant 2, Four-Hour Vehicular Volume threshold volumes, as well. Other intersection improvements that could be implemented such as 4-way stop control and a roundabout, but would likely not be warranted (4-way stop control) or not be a feasible solution (roundabout) to address traffic safety concerns.

Other solutions that potentially addresses the traffic safety concerns include allowing the use of the driveway opposite of Anania Drive under certain situations such as large events occurring at the Church of Jesus Christ of Latter-day Saints and evaluating the driveway at the Post Office. However, for the latter option, that evaluation is outside of the scope of this project and if options are being considered, it should be brought up to the City and County of Honolulu."

During the Draft EA public comment period, the DOE Office of Facilities and Operations wrote:

> *"The DEA's TIAR recommends STOP control and ADA ramps at the project driveway but provides no analysis of school-related conflicts. The Department requests:*
>
> - *Sight distance protections (no obstructive landscaping or parking);*
> - *Evaluation of left turn exit restrictions during school traffic peak hours; and*
> - *Coordination to ensure safe merging and crossing movements between MHS users and housing residents."* (Appendix L)

The line of sight around the Project driveway will remain clear, with no obstructive landscaping or parking. According to the Project traffic engineer, AECOM, the analysis completed in the TIAR indicates an acceptable level of service that would not require any turn restrictions.

Potential Construction-Related Impacts and Mitigation Measures of the Proposed Project

During the pre-Assessment consultation process, the DTS wrote:

> *"Neighborhood Impacts. The area representatives, neighborhood board, as well as the area guests, businesses, emergency personnel (fire, ambulance, and police), Oahu Transit Services, Inc. (TheBus and TheHandi-Van), etc., should be kept apprised of the details and status throughout the project and the impacts that the project may have on the adjoining local street area network."* (Appendix A)

The Applicant will provide periodic updates to the Neighborhood Board when a particular aspect of Project construction may impact the adjoining street network.

During the pre-Assessment consultation process, the DOT wrote:

> 2. *"Determine the applicability for the following permits:*
>
>   a. *Permit to Perform Work Upon State Highways is required for any work within the state highway right-of-way (ROW), (Hawaii Revised Statutes [HRS] Chapter 264). The application includes the review and approval of construction drawings and a Traffic Management Plan.*
>
>   b. *Permit to Operate or Transport Oversize and/or Overweight Vehicles and Loads Over State Highways (HRS Chapter 291, Section 36).*
>
>   c. *Permit for the Occupancy and Use of State Highways (HRS Chapter 264). This is applicable to underground and overhead power lines and utility pipelines within the state highway ROW…"* (Appendix A)

As discussed in Section 4.6.2 below, subject to DPP's approval, the proposed connection to the existing sewer system would include installing an appropriately sized sewer main and manholes from the project site along Meheula Parkway to the existing 21-inch sewer main along Kamehameha Highway within the State right-of-way (ROW). Accordingly, both a Permit to Perform Work Upon State Highways as well as a Permit for the Occupancy and Use of State Highways will likely be required. The applicability for a Permit to Operate or Transport Oversize and/or Overweight Vehicles and Loads Over State Highways would depend on the contractor's

means and methods with their construction equipment, which will be determined during Project design and construction. See Section 5.3 List of Required Permits and Approvals.

During the Draft EA public comment period, the DOE Office of Facilities and Operations wrote:

> *"The DEA's TIAR proposes no intersection improvements, despite school-area conditions and documented pedestrian volumes. The DEA repeatedly labels LOS C-D as 'acceptable,' but the Department offers that this 'acceptable' label does not accurately reflect the realities of school operations. To address specific issues relating to traffic safety. school access, and event operations, the Department will require that the MOA/MOU discussed in the comments above shall also address the following points of concern:*
>
> - *A Game Day/Event Transportation and Parking Plan, given the community's documented concern about the loss of the existing 48-stall lot used during football/volleyball events. A formal game day/event traffic plan;*
> - *Overflow parking agreements;*
> - *Temporary traffic control staffing for major events;*
> - *Coordination between school operations and the property manager to avoid conflicts between event parking and resident access;*
> - *Construction Traffic Management Plan addressing school day AM/PM peak conflict points, pedestrian safety, and bus circulation;*
> - *No lane closures during school drop off/pick up windows;*
> - *Clearly protected student walking routes during construction;*
> - *Early notification to the Department, school administration, bus operators, and families; and*
> - *Safe staging areas away from school frontages."* (Appendix L)

SFA will work with DOE to address the above points of concern in the operations document and the Construction Traffic Management Plan (CTMP).

During the Draft EA public comment period, the DOE Office of Facilities and Operations wrote:

> *"The DEA's TIAR does not propose intersection improvements, even though all study intersections operate at LOS C-D, and student pedestrian volumes are high. The DEA's TIAR describes LOS C-D as 'acceptable' but does not consider school-specific safety factors. The Department recommends the evaluation and, if warranted, install:*
> - *Rectangular Rapid Flash Beacons at high volume school crossings;*
> - *High visibility raised crosswalk upgrades at Anania Drive and Makaimoimo Street;*
> - *School hour turn restrictions (e.g., protected lefts, limited right turn on red); and*
> - *Speed management measures on Meheula Parkway, such as school hour 20 mph zones, speed feedback signs, or lane narrowing."* (Appendix L)

According to the traffic engineer, AECOM, the above requests would fall more in line with a school safety study.

4.2.2 Public Transportation

The CCH operates TheBus, a public bus transportation service for the island of O‘ahu. The nearest westbound stop is located just mauka of the entrance to the MHS gym parking lot on Meheula Parkway (3-minute walk from the farthest corner of the lot). The eastbound stop is just across the street, on the corner of Meheula Parkway and Anania Drive (4-minute walk from the farthest corner of the lot). Mililani Transit Center is about a 10-minute walk from the project site, located on the other end of MHS, in front of Town Center of Mililani.

Routes 51 and 52 provide service between Wahiawā/Hale‘iwa and Honolulu. During peak hours, Route 51 runs from 5:45 to 8:45 AM with approximately 25-40 minutes between arrivals. Route 52 runs from 7:00 to 8:45 AM during peak hours approximately every 20-30 minutes. Both Routes 51 and 52 have a peak PM period from 3:00 to 6:00 PM. Routes 84 and 84A provide express service from Mililani to Downtown. Route 99 provides service between Wahiawā and Kapolei. These routes only run about twice in both peak AM and PM hours. There are additional express routes that only stop at the Mililani Transit Center.

Potential Impacts and Mitigation Measures of the Proposed Project

During the pre-Assessment consultation process, the DTS wrote:

> *“Transportation Demand Management (TDM) Strategies. The Applicant should include a description of how the Project will promote, encourage, and monitor alternative transportation usage…*
>
> *Bus Stops. The project site is in the immediate vicinity of bus stops. Please coordinate roadway improvements with DTS - Transportation Mobility Division (TMD)…”* (Appendix A)

The Project team will be in coordination with DTS. The only roadway improvement will include the addition of a driveway into the development, which should not affect bus service or bus stop locations.

For transit-related TDM strategies, the Project team may coordinate with DTS if there is a desire to add additional bus stops in the vicinity of the site. There are several bus stops along this stretch of Meheula Parkway that would allow residents access to TheBus system. However, there is not a bus stop directly fronting the development.

In the TIAR (Appendix H), multimodal stress and comfort levels were analyzed using a high to low comfort scale and transit received a high rating. It is expected that transit facilities will experience additional ridership and meet needs of new residents. No mitigation measures are planned at this time.

During the Draft EA public comment period, the Chair of NB25 wrote:

> *“Board members requested: …*
>
> 8. *Inclusion of multimodal strategies (transit incentives, bus connectivity, secure bike storage, car-share stalls, etc.).”* (Appendix L)

4.2.3 Pedestrian and Bicycle Facilities

The segment of Meheula Parkway on which the proposed Project is located has detached sidewalks along both sides of the road, and is lined with sporadic trees, which helps with walkability. The road currently has bike lanes along both sides with plans to upgrade to a protected bicycle lane in the future. The areas around the study intersections have usable sidewalks and crosswalks.

Pedestrians and cyclists were observed using this infrastructure at major intersections close to the Project site. Observations were recorded during second-highest peak hours to evaluate impacts in accordance with DTS's TIA Guide. Second peak hours were from 7:30 to 8:30 AM, 12:30 to 1:30 PM, and 4:30 to 5:30 PM. The observations are in Table 8 below and further information can be found in the TIAR (Appendix H**)**.

Table 8: Existing Pedestrian and Bicycle Volumes

Intersections	Pedestrians			Cyclists		
	AM	Midday	PM	AM	Midday	PM
Meheula Pkwy & Kamehameha Hwy	25	-	3	5	-	4
LDS Church Dwy	19	28	6	4	0	0
Anania Dr/MHS Dwy	56	60	14	8	8	2
Makaʻimoʻimo St/MHS Dwy	233	-	128	8	-	1
Lanikūhana Ave/Hoʻokelewaʻa	121	-	33	14	-	7
Notes: *Pkwy = parkway, Hwy = highway, Dr = drive, Dwy = driveway, St = street, Ave = avenue*						

Most of the pedestrians and cyclists observed at the LDS Church driveway, Anania Dr/MHS driveway, and Makaʻimoʻimo St/MHS driveway were students. Midday peak pedestrian and cyclist increases align with the MHS bell schedule.

Potential Impacts and Mitigation Measures of the Proposed Project

Future Pedestrian Facilities – Two pedestrian improvement projects are planned near the Project site. DTS is currently designing a crosswalk enhancement at the intersection of Hikikaulia Street and Meheula Parkway to improve pedestrian safety. Additionally, a sidewalk improvement project along both sides of Kamehameha Highway—from Meheula Parkway to Lanikūhana Avenue—is underway, with AECOM serving as the design consultant. The Kamehameha Highway project will install new sidewalks to connect existing pedestrian infrastructure and enhance walkability in the area. Both pedestrian projects will help to enhance the pedestrian facilities for future residents of the development.

Future Bicycle Facilities – Based on the DTS's 2019 Oʻahu Bike Plan Update, there are several proposed bicycle projects near the Project site. The proposed bicycle projects are separated into several tiers with Tier 1 having the highest priority and Tier 3 having the lowest priority. The Tier 1 project is along Meheula Parkway, which currently serves an existing bike lane, and

proposes to install a protected bike lane from Lanikūhana Avenue (south) to H-2 Interchange. The remaining projects in the vicinity of the proposed development are Tier 2 projects. These projects propose the installation of bike lanes alongside Lanikūhana Avenue, Anania Drive, and Kīpapa Drive. The project along Lanikūhana Avenue, which currently serves as a shared roadway, would install a bike lane from the south end of Meheula Parkway to Mililani Shopping Center. Along Anania Drive, the proposed project would install a bike lane from Meheula Parkway to Kīpapa Gulch Path. Along Kīpapa Drive, the proposed project plans to add bike lanes along Kīpapa Drive Loop. The other Tier 2 project is located along Kamehameha Highway, which would continue the shoulder bikeway facility from Lanikūhana Avenue to Ka Uka Boulevard.

During the pre-Assessment consultation process, DTS wrote:

> *"The Oahu Bike Plan (2019) includes proposed projects along the frontage of the Project site including; Meheula Parkway (Project ID 1-12) Protected Bike Lane, Lanikuhana Street to H-2 Interchange, Kamehameha Highway (Project ID 2-9) Shoulder Bikeway, Meheula Parkway to Ka Uka Boulevard, Kipapa Drive (Project 2-11) Bike Lane, Kipapa Drive Loop. Any improvements shall not interfere with the future bike facilities."* (Appendix A)

The Applicant will coordinate with DTS to ensure that construction of the Project will not conflict with the construction of proposed O'ahu Bike Plan projects.

During the pre-Assessment consultation process, DTS wrote:

> *"Transportation Demand Management (TDM) Strategies. The Applicant should include a description of how the Project will promote, encourage, and monitor alternative transportation usage…"* (Appendix A)

For pedestrian-related TDM strategies, the proposed Project will include accessible paths throughout the Project site that will connect to existing pedestrian facilities along Meheula Parkway.

For bicycle-related TDM strategies, the Project will encourage the use of bikeways and bike lanes by incorporating bike storage or parking for the residents. The future bicycle projects that are planned in the vicinity would enhance the bicycle network. Other bicycle strategies such as the implementation of bicycle share stations would require coordination with the appropriate agencies.

Residents are predicted to walk and bike regularly, given the proximity of the Town Center of Mililani and Mililani Shopping Center. The development aims to be integrated in the existing mobility network and encourage the use of alternative modes of transportation like walking and biking. Therefore, the Project is expected to have a positive impact on pedestrian and bicycle facilities in the area. No mitigation measures are planned at this time.

During the Draft EA public comment period, the DPP wrote:

> *h. "Pedestrian walkways should lead to pedestrian crossings.*
>
> *i. Bicycle parking should be located in a safe and convenient location."* (Appendix L)

During the Draft EA public comment period, the Chair of NB25 wrote:

> *"Board members requested: …*
>
> 8. *Inclusion of multimodal strategies (transit incentives, bus connectivity, secure bike storage, car-share stalls, etc.)."* (Appendix L)

During the pre-Assessment consultation process, DTS wrote:

> *"Project plans (vehicular and pedestrian circulation, sidewalks, parking and pedestrian pathways, vehicular ingress/egress, etc.) should be reviewed and approved by DCAB to ensure full compliance with Americans with Disabilities Act requirements."* (Appendix A)

The Project will follow ADA requirements, and plans will be reviewed and approved by DCAB to confirm compliance.

During the Draft EA public comment period, the DOE Office of Facilities and Operations wrote:

> *"The DEA identifies significant student pedestrian volumes during school peaks and notes a City planned crosswalk upgrade at Hikikaulia Street/Meheula Parkway and proposed protected bike lane improvements along Meheula Parkway. The Department requests:*
> - *Assurance that the project does not interfere or conflict with City's planned upgrades;*
> - *Assurance that the new driveway does not reduce pedestrian/cyclist safety; and*
> - *Additional mid-block lighting, ADA path upgrades, and continuous sidewalks connecting the project and MHS."* (Appendix L)

The Project will not interfere or conflict with the City's planned upgrades. The Project driveway should not negatively affect the safety of pedestrians and bicyclists. Regarding the third bullet point above, the existing street lighting along Meheula Parkway appears to follow standard spacing approximately every 150 feet. Project pedestrian paths will be ADA-compliant and will connect the site to the sidewalk along Meheula Parkway but will be kept separate from the MHS pedestrian circulation by a perimeter fence.

4.2.4 Parking

During the Draft EA public comment period, the DPP wrote:

> ***"Parking Demand Study****: A parking demand study was requested by the Mililani Neighborhood Board No. 25 and the City and County Department of Transportation [Services]. A parking demand study was not included in the Draft EA. The proposed Project includes 156* [sic] *off-street parking spaces and no bicycle parking, even though multiple bike lanes are proposed for the area. DPP requests that a parking demand study be conducted. The Final EA should incorporate the results of the parking demand study."* (Appendix L)

The Project Site currently contains an existing 48-stall overflow parking lot for MHS, which is typically utilized for school events and sports games. To the east of the Project Site is another, larger parking lot, abutting the gym. Further east, MHS has a long, primary parking lot at the main portion of the campus along Meheula Parkway.

Potential Impacts and Mitigation Measures of the Proposed Project

A mix of covered and uncovered parking will be provided for Project residents. Parking will be arranged around the looping driveway within the Project Site, with some of the parking stalls located beneath the residential units (Figure 5: Preliminary Site Plan). The site plan includes 103 standard stalls, 36 tandem stalls, 5 visitor stalls, and 6 accessible (ADA) stalls, for a total of 150 parking stalls. This count includes one parking stall for the office use. The Project's internal looping driveway and residential parking will be separated from that of the school by a perimeter fence, and a chained emergency entry at the eastern boundary of the Project Site.

During the Draft EA public comment period, the DPP wrote:

g. *"All loading and trash pick-up areas should be designed such that vehicles enter and exit front first. All trash pick-up activities should be done on-site. Provide adequate on-site turn-around areas and ensure that the layout of parking spaces in the loading/delivery area does not interfere with turning maneuvers for large vehicles."* (Appendix L)

As requested by DPP, a Parking Demand Study was conducted and is attached to this Final EA as Appendix M. Residential parking minimums as required by the LUO will be exceeded for the Project, ensuring that parking demand will be met. There will be 1.58 stalls per unit, see Table 9 below and also Section 5.2.3 of this EA. This amount of parking is expected to be sufficient, given proximity to Town Center of Mililani and employment opportunities.

Table 9: Minimum Off-Street Parking Ratios (per LUO Table 21-6.1)

Use Categories	Standard (per floor area)	Calculation basis	Required Parking	Proposed Parking	Difference
Residential and Lodging (Household living – multi-unit dwellings)	1 per 1,000 square feet of net dwelling area	62,860 SF ÷ 1,000	63 parking stalls	149 parking stalls	86 additional stalls
Commercial 1 (General Office)	1 per 500 square feet	320 SF ÷ 500	1 parking stall	1 parking stall	0

During the Draft EA public comment period, the DOE Office of Facilities and Operations wrote:

"As an additional condition of its approval, the Department will also require a written commitment by the SFA and Project developer that: … A 48-stall parking lot which will be displaced as a result of the Project, will be relocated to another location on the MHS campus subject to review and approval by the Department, at no cost or expense to the Department or MHS, and shall be completed, inspected and approved by the Department before any construction of the Project shall commence. …

…the loss of existing parking spaces will substantially affect access for MHS students and staff. …

… To address specific issues relating to traffic safety, school access, and event operations, the Department will require that the MOA/MOU discussed in the comments above shall also address the following points of concern:

• A Game Day/Event Transportation and Parking Plan, given the community's documented concern about the loss of the existing 48-stall lot used during football/volleyball events. A formal game day/event traffic plan; …" (Appendix L)

During the Draft EA public comment period, the Chair of NB25 wrote:

"Board members requested: …

9. *Clarification, maps, and proposed locations of the 149* [sic] *displaced, proposed off-street parking stalls for MHS students and teachers in the traffic impact analysis."* (Appendix L)

SFA is currently working with DOE to identify a nearby site on campus to relocate the 48-stall overflow parking lot. Figure 5b of the Final EA shows the proposed location of the replacement parking within the campus. The proposed replacement parking lot will be paved and have access from a campus driveway. This proposed replacement parking lot will provide access to athletic fields and events.

Bicycle Parking: Bicycle parking is currently planned for 27 long-term and 6 short-term stalls. Long-term bicycle stalls will likely be in an enclosed area in the parking structure and short-term stalls will be outside the lobby.

4.3 NOISE

An Acoustic Study was conducted by Terry A. Hayes Associates, Inc. in November 2025, to evaluate the potential for acoustic impacts associated with the proposed Project. The following is a summary of the Acoustic Study; the entire report is attached as Appendix I.

Existing Conditions

For the purposes of this analysis, noise is generally defined as unwanted sound. The degree to which noise can impact the human environment ranges from levels that interfere with speech and sleep (annoyance and nuisance) to levels that cause adverse health effects (hearing loss and psychological effects). Human response to noise is subjective and can vary greatly from person to person. Factors that influence individual response include the intensity, frequency, and pattern of noise, the amount of background noise present before the intruding noise, and the nature of work or human activity that is exposed to the noise source.

Sound is measured in terms of the loudness (amplitude) and frequency (pitch) of the sound. The standard unit of measurement for loudness is the decibel (dB). Since the human ear is not equally sensitive to sound at all frequencies, the "A-weighted scale," abbreviated dBA, is the best reflection of the normal hearing sensitivity range of the human ear. On this scale, the range of human hearing extends from approximately 3 to 140 dBA.

Current sources of noise in the vicinity of the Project Site include nearby roadways such as Meheula Parkway, Kauinana Stadium (which is part of MHS), and Wheeler Army Airfield (which

is 2.5 miles north of the site). The local roadways and the airfield are the primary sources of noise in the project vicinity. The stadium would only generate noise when in use, which would not be a continuous source of noise during an average day.

Existing noise levels were calculated using the HUD Day/Night Noise Level (DNL) Calculator, which calculates the average noise over a 24-hour period. The model calculates the DNL for roadways by taking into account average vehicle speed, distance to receptor, average daily trips, road gradient, average daily trips (ADT) by vehicle type, the percentage of ADT that occurs between the hours of 10:00 PM to 7:00 AM, and airport noise levels. The existing noise level was calculated utilizing existing traffic volumes from the TIAR prepared for the proposed project (see Appendix H). Noise levels were calculated for eight nearby locations, which showed levels ranging from 64 to 71 L_{dn}, with an average 24-hour L_{dn} of 66.6 dBA.

Potential Impacts and Mitigation Measures of the Proposed Project

The HAR define state-wide regulations for maximum permissible sound levels based on zoning districts (HAR, Chapter 11-46, Community Noise Control). In addition, the Hawai‘i State Department of Health discusses applicable local rules for various noise sources in their *Noise Reference Manual O‘ahu Edition.*

To determine the potential noise impacts of the Proposed Project, sensitive land uses were identified in the immediate areas surrounding the Project Site. These include residences and a church which are labeled as sensitive depending on the distance from the Project Site.

The analysis considers construction and operational sources of noise. The noise level during the construction period at each receptor location (L_{eq}) was calculated by (1) making a distance adjustment to the construction source sound level and (2) logarithmically adding the adjusted construction noise source level to the ambient noise level. Operational noise levels were calculated based on information provided in the traffic study and stationary noise sources located on the Project Site (e.g., mechanical equipment).

To assess future noise levels at the Project Site, traffic noise was analyzed using the HUD DNL Calculator. The model calculates the DNL for roadways by considering average vehicle speed, distance to receptor, average daily trips, road gradient, ADT by vehicle type, and the percentage of ADT that occurs between the hours of 10:00 PM to 7:00 AM.

<u>Construction Activities</u>
During the Draft EA public review period, the DOE Office of Facilities and Operations wrote:

> *“The Department will require that a construction management plan be established to minimize noise, dust, and other disruptions, especially during school hours, to avoid interference with student learning and school operations.”* (Appendix L)

Construction activities at the Proposed Project are expected to temporarily increase community noise levels. Noise levels are expected to fluctuate depending on the construction phase and construction activity, equipment type and duration of use, distance between the noise source and receptor, and presence or absence of noise attenuation barriers and other mitigation. Construction activity is planned for 7:00 AM to 6:00 PM. Monday through Friday, and 9:00 AM to 6:00 PM on Saturdays. HUD encourages the use of quieter construction equipment and methods in population

centers instead of a quantitative construction noise threshold. With the three loudest pieces of construction equipment operating at once, noise levels are expected to reach approximately 75.5 dBA Equivalent Noise Level (L_{eq}), which is less than the *Noise Reference Manual O'ahu Edition* maximum noise level of 78 dBA. Therefore, construction noise effects are not expected to be adverse.

Operational Activities

Exterior noise levels are estimated at 68 dBA L_{dn} along Meheula Parkway. According to HUD, since this exceeds their exterior noise standard, the materials used with the new construction must provide 26 dBA exterior-to-interior noise reduction. Assuming a fresh air supply system is installed with the new construction, predicted interior noise levels at the new residence would be approximately 42 dBA L_{dn}, which is less than the standard recommended by HUD and residents would not be exposed to excessive 24-hour noise.

New residents are expected to contribute to traffic on local roadways. The project's estimated contribution to mobile source noise levels with increased traffic is less than 5 dBA and is not expected to adversely increase noise.

On-site noise sources include ventilation systems, tenant conversations, and landscaping. Mechanical equipment, such as ventilation and air conditioning systems, is expected to generate 49.1 dBA L_{eq} for the nearest sensitive land use, which is within the maximum permissible noise limits. Thus, on-site noise sources are not expected to have a significant or adverse effect.

4.4 VISUAL RESOURCES

As previously noted, the Project site currently contains a paved 48-stall parking lot, and a paved sidewalk connecting the parking lot to the tennis courts. The Project site contains an embankment along Meheula Parkway such that the main portion of the Project site is approximately 10 feet higher than the elevation of the westbound portion of Meheula Parkway (see Figure 4: Site Photos). As viewed from Meheula Parkway, the Project site is most visible from westbound traffic as it approaches the intersection of Anania Drive. Views toward the site from Meheula Parkway do not offer views towards either the Ko'olau or Wai'anae Mountain Ranges. The only visual landmarks (as viewed from Meheula Parkway) that provide a backdrop to the Project site are tall pine trees and athletic field lights.

Potential Impacts and Mitigation Measures of the Proposed Project

With the construction of the proposed Project, the appearance of the Project site will change from open space (a 48-stall parking lot and grassed lawn) to multi-family housing (for teacher workforce). The residential nature of the proposed Project is compatible with Mililani, a residential community that includes both multi-family and single-family housing, schools, churches, shopping centers, parks, and other land uses.

During the Draft EA public comment period, Mary Smart (Mililani Town resident) wrote:

> *"The project will be elevated above the normal Mililani height restrictions to increase unit numbers and accommodate parking. This would be a major visual distraction from our planned community ambiance."* (Appendix L)

According to the CCH zoning maps, there are large areas bounded by Meheula Parkway, Anania Drive, and Lanikūhana Avenue that currently permit buildings up to 60 feet in height. The visual impact of the proposed Project is intended to be mitigated by the large trees on Meheula Parkway and Project landscaping.

4.5 SOCIAL & ECONOMIC CHARACTERISTICS

According to Census Reporter, based on the American Community Survey 2023 data, the population within the Mililani Town CDP was 27,495. Within the four square mile CDP, the population density is equivalent to 6,857.8 people per square mile.

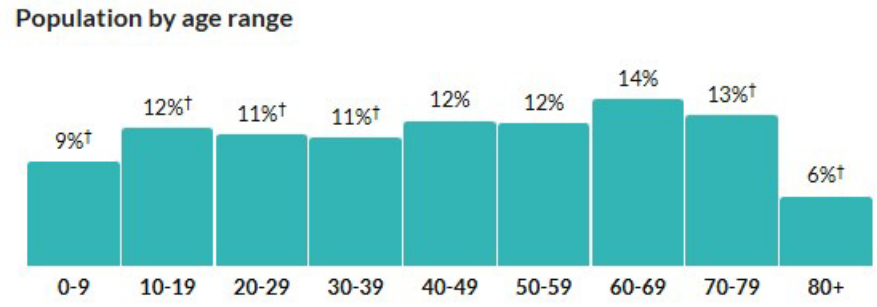

(Source: https://censusreporter.org/profiles/16000US1551050-mililani-town-hi/)

The median age was 45.8, which was 20% higher than in Urban Honolulu, HI Metro Area (39.4). Fifty-six percent of the general population of Mililani Town are composed of working-age adults (ages 18 to 64).

The per capita income in the Mililani Town CDP is $51,530, which is about 10% higher than the amount in the Urban Honolulu, HI Metro Area ($46,361). The median household income in the Mililani Town CDP is $142,123, which is about 20% higher than the amount in the Urban Honolulu, HI Metro Area.

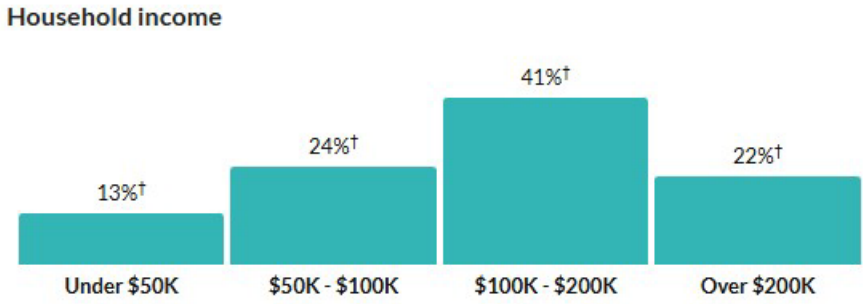

(Source: https://censusreporter.org/profiles/16000US1551050-mililani-town-hi/)

Within the Mililani Town CDP, the means of transportation to work is highly dependent (90%) on personal automobiles.

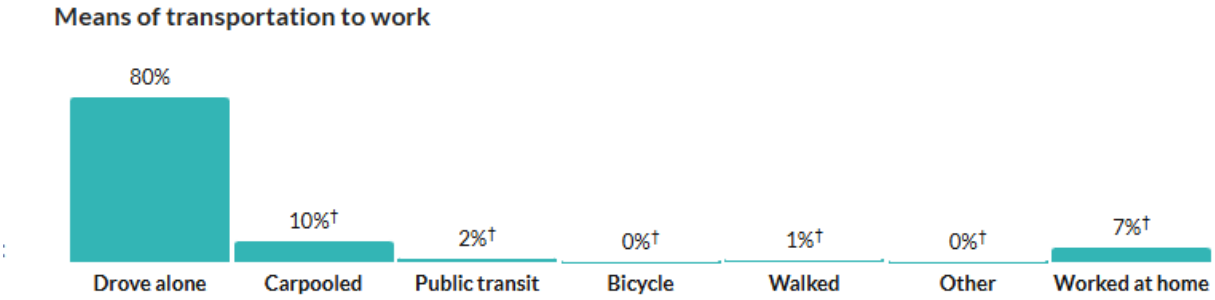

(Source: https://censusreporter.org/profiles/16000US1551050-mililani-town-hi/)

The mean travel time to work was 30.6 minutes, which was about 10% higher than in Urban Honolulu, HI Metro Area (27.1 minutes).

Within the Mililani Town CDP there were 9,945 housing units, of which 98% were occupied. The average household size is approximately 2.8 persons.

Additionally, the residents are generally stable with 94% living in the same house a year ago. Both conditions point to the lack of availability of housing units for sale or rent in the Mililani Town CDP.

Potential Impacts and Mitigation Measures of the Proposed Project

Based on an average household size of 2.8 persons per household, the proposed Project may introduce up to 280 new residents to the proximity of Mililani (assuming none already live in the area). Two hundred eighty residents represent approximately one percent of the total population of Mililani.

As previously noted, the persistent and dire shortage of licensed teachers in Hawai‘i presents a critical challenge to the State’s educational objectives. Since 2012, the number of teachers leaving Hawai‘i annually has increased by more than 70%. Substantially more teachers leave the State each year than retire or resign for other reasons. Hawai‘i’s housing market plays a significant role in creating an environment that makes it exceedingly difficult to attract qualified educators and retain them in the State. Increasing the supply of affordable and workforce housing available for teachers is a well-established mechanism to support teacher retention and recruitment efforts.

The proposed Project will not only address the availability of affordable housing in Mililani but also reduce the reliance on personal automobiles to commute to work, since some of the future teachers and staff residing in the proposed Project will be able to walk to work.

In addition, the proposed Project will provide construction-related employment.

After construction, the operation and maintenance of the proposed Project will generate a smaller number of jobs and smaller general excise tax contributions related to repair and maintenance materials and services.

4.6 INFRASTRUCTURE AND UTILITIES

During the pre-Assessment consultation process, the Chair of NB25 wrote:

> ***"…Utilities, Energy, and Sustainability***
>
> - *Confirm utility (water, sewer, power) capacities and any required upgrades, address reliability and resilience…"* (Appendix A)

During the Draft EA public comment period, the Chair of NB25 wrote:

> *"Board members requested clarification regarding:*
>
> - *Sewer/plumbing infrastructure capacity and associated costs.*
> - *Utility capacities (water, sewer, power) and resilience measures."* (Appendix L)

A civil due diligence report is attached to this EA as Appendix J and summarized below.

4.6.1 Water System

Potable water service is provided to the MHS parcel through the existing Honolulu Board of Water Supply (BWS) water system. According to BWS as-built records, there is an existing 16-inch waterline fronting MHS along Meheula Parkway. The waterline downsizes to an 8-inch main and then back up to a 12-inch main along the portion of Meheula Parkway west of Anania Drive, which fronts the Project site. The Project site currently includes a parking lot and a landscaped gardening area that some staff members use to grow produce. Therefore, there is no potable water service outside of what is used for irrigation.

Potential Impacts and Mitigation Measures of the Proposed Project

During the pre-Assessment consultation process, the CWRM wrote:

> *"We recommend coordination with the county to incorporate this project into the next update of the county's Water Use and Development Plan (WUDP). Please contact the respective Planning Department and/or Department of Water Supply for further information…*
>
> *We recommend that water efficient fixtures be installed and water efficient practices implemented throughout the project to reduce the increased demand on the area's freshwater resources. Reducing the water usage of a home or building may earn credit towards Leadership in Energy and Environmental Design (LEED) certification. More information on LEED certification is available at http://www.usgbc.org/leed. A listing of fixtures certified by the EAP as having high water efficiency can be found at http://www.epa.gov/watersense...*
>
> *We recommend the use of best management practices (BMP) for stormwater management to minimize the impact of the project on the existing area's hydrology while maintaining on-site infiltration and preventing polluted runoff from storm events. Stormwater management BMPs may earn credit toward LEED certification. More information on*

stormwater BMPs can be found at http://planning.hawaii.gov/czm/initiatives/low-impact-development/...

We recommend the use of alternative water sources, wherever practicable…

We recommend adopting landscape irrigation conservation best management practices endorsed by the Landscape Industry Council of Hawai'i. These practices can be found online at https://hawaiiscape.com/index.php. Additional information can be found at https://dlnr.hawaii.gov/cwrm/planning/conservation/...

The proposed water source(s) and projected water demands for the project, both potable and nonpotable, should be identified and the calculations used to estimate demands should be provided. Water conservation and efficiency measures to be implemented should also be discussed." (Appendix A)

Pending BWS approval, a new lateral and water meter will be designed and installed to service the proposed Project. Using the Water System Standards for the State of Hawai'i (2002), the estimated water demand was calculated for the proposed Project. According to the standards, an estimated 400 gallons of water per unit should be used to design the water system. Therefore, for the (previously) 94-unit development, the average water usage per day is 37,600 gallons. A demand factor of 1.5 and 3.0 is applied to the average water usage to determine the maximum daily flow and peak hour flow, respectively. The estimated maximum daily demand is 56,400 gallons per day (gpd) and the peak estimated peak hour flow is 112,800 gpd. Per the water system standards, the water system should be designed to deliver the maximum daily demand simultaneously with the required fire flow. The fire flow requirement for low-rise apartments is 1,500 gallons per minute (gpm). Excluding fire flow, the water system should have capacity to deliver the peak hour flow.

A water availability letter from BWS, dated August 14, 2025, stated that the existing water system is adequate to accommodate the proposed development (previously 94 units). However, this determination is based on current available data and BWS reserves the right to revise their decision up until the submission for approval of a building permit application. Per BWS requirements, water conservation measures will be studied and implemented as deemed necessary. The construction drawings and schedule will also be submitted to BWS for approval. BWS's input is imperative to ensure there will be minimal impact on the existing water system and that surrounding properties will experience little to no water services interruptions during construction of the project.

Once water is made available to the project site, the applicant is required to pay the water system facilities charges (WSFC) to BWS. However, due to the nature of the project consisting of affordable housing, BWS may waive the WSFC and new meter cost. Any waivers would be evaluated during building permit review.

Site fire protection will also be provided by the BWS potable water system. In another letter dated September 17, 2025, BWS provided calculated flow data for the nearby fire hydrants. Based on the calculated data, the fire hydrants nearest the project site (C00902, C00903 and C01574) all meet the fire flow requirements of 1,500 gpm. However, this data was calculated based on the existing design of the water system and is not indicative of actual field conditions. To better determine flows available to the project site, on-site pressure readings at various times of the day will need to be recorded. All on-site fire protection requirements will be coordinated with the Fire Prevention Bureau of the Honolulu Fire Department (HFD).

The existing BWS potable water system will also likely supply the irrigation demand for the project site. Per BWS guidelines, a separate backflow preventer (BFP) will be installed for the irrigation line.

During the pre-Assessment consultation process, the BWS wrote:

> *"The existing water system is adequate to accommodate the proposed development. However, please be advised that this information is based upon current data, and therefore, the Board of Water Supply (BWS) reserves the right to change any position or information stated herein up until the final approval of the building permit application. The final decision on the availability of water will be confirmed when the building permit application is submitted for approval.*
>
> *When water is made available, the applicant will be required to pay our Water System Facilities Charges (WSFC) for resource development, transmission, and daily storage.*
>
> *Water conservation measures are required for all proposed developments. These measures include utilization of nonpotable water for irrigation using rain catchment, drought tolerant plants, xeriscape landscaping, efficient irrigation systems, such as a drip system and moisture sensors, and the use of Water Sense labeled ultra-low flow water fixtures and toilets.*
>
> *Consistent with Act 170, 2016 (H .B. 1749), the developer will be required to utilize reclaimed water for uses other than drinking and potable water demands of the proposed project. The developer should investigate the feasibility of using reclaimed water for this State-owned land project and submit a report of the investigation to the BWS for our review.*
>
> *The proposed project is subject to BWS Cross-Connection Control and Backflow Prevention requirements prior to the issuance of the Building Permit Applications.*
>
> *The construction drawings should be submitted for our approval, and the construction schedule should be coordinated to minimize impact to the water system.*
>
> *The on-site fire protection requirements should be coordinated with the Fire Prevention Bureau of the Honolulu Fire Department.*
>
> *For the request for deferral of WSFC until the Certificate of Occupancy is obtained pursuant to Section 201-H, HRS, please coordinate with Garon Hamasaki, Service Engineering Branch of our Customer Care Division, at (808) 748-5472.*
>
> *The BWS may waive the WSFC and new meter cost for qualified on-site affordable and homeless dwelling units, up to 500 dwelling units per year. The waivers will be evaluated when the building permit is submitted for approval. To qualify, the dwelling units must be certified as either affordable or homeless dwelling units by the appropriate agency of the City and County of Honolulu. Waiver of the WSFC will apply only to fixture units associated with the certified dwelling units. The amount of the meter waiver shall be calculated as a percentage of the number of certified dwelling units to the total number of dwelling units in the project. If the annual cap of 500 dwelling units has not been reached*

> *and a project is proposed that would qualify for more than the remaining number of dwelling units in that year, the Manager and Chief Engineer has the discretion to increase that year's limit."* (Appendix A)

Water conservation measures will be studied, and those that are appropriate to the climatic conditions and proposed building will be incorporated into the design of the Project.

It should be noted that, assuming the proposed Project will require HRS 201H approval, one of the exemptions that may be requested is from WSFC for resource development, transmission, and daily storage.

On-site fire protection requirements will be coordinated with the Fire Prevention Bureau of the HFD.

4.6.2 Wastewater System

The Honolulu Sewer Utilities Application map on the CCH Geographic Information Systems (GIS) website does not show any gravity sewer mains or manholes along Meheula Parkway to service the proposed project. Wastewater flow generated by MHS flows through a series of gravity sewer lines and into the county's main sewer system. The sewer system for the proposed development will be independent from MHS's sewer system and will connect directly to the County's system.

Potential Impacts and Mitigation Measures of the Proposed Project

A sewer connection application (SCA-2025-08-00086) for the 95-unit development was submitted to the DPP on August 15, 2025, and was approved on April 7, 2026. Another sewer connection application was previously submitted and approved for an outdated, denser layout. As approved by the most recent sewer connection application, the wastewater generated by the proposed project will be discharged to the existing sewer system. Subject to DPP's approval, the proposed connection to the existing sewer system would include installing an appropriately sized sewer main and manholes from the project site along Meheula Parkway to the existing 21-inch sewer main along Kamehameha Highway. This would likely require both a Permit to Perform Work Upon State Highways as well as a Permit for the Occupancy and Use of State Highways.

Using the Wastewater System Design Standards by the CCH, the estimated wastewater flows for the proposed development were calculated. Based on the design parameters, the base sanitary flow is expected to be approximately 18,500 gpd and the peak base sanitary flow is expected to be approximately 46,100 gpd. According to the standards, all new gravity sewer systems should be designed to carry the peak flow of wastewater without exceeding 85% of the pipe's full flow capacity.

During the pre-Assessment consultation process, the DOH Wastewater Branch (WWB) wrote:

> *"Basically, as this project does not seem to have any wastewater treatment or disposal issues as the property is serviced by the City & County of Honolulu's Sewer Service System, we have no objections or comments to offer at this time."* (Appendix A)

During the Draft EA public comment period, the DOH WWB wrote:

> *"As this project is sewered, we have no objections. Please ensure that all wastewater plans will conform to applicable provisions of the Hawaii Administrative Rules, Chapter 11-62, 'Wastewater Systems.'"* (Appendix L)

During the Draft EA public comment period, the DOH WWB also provided its standard comments as follows:

1. *"As the project will be served by the City & County of Honolulu/ County/ Private sewer system, we have no objections to the project.*

2. *Per HAR, Ch. 11-62 section 11-62-05, all areas of the State are critical wastewater disposal areas. All wastewater systems must conform to applicable provisions of HAR, Ch. 11-62. We do reserve the right to review the detailed wastewater plans for conformance to applicable rules. Design plans should address any effect associated with the construction of and/or discharges from the wastewater systems to any public trust, Native Hawaiian resources or the exercise of traditional cultural practices.*

3. *Large Capacity Cesspools (LCC):*

   In 1999, EPA promulgated regulations under the Safe Drinking Water Act's Underground Injection Control (UIC) Program required closure of all existing large capacity cesspools (LCC) by April 5, 2005. Under federal regulations, a large capacity cesspool is a cesspool which serves multiple residential units, serves a mixed use of a residential and non-residential activity, or for nonresidential facilities has the potential to serve 20 or more persons per day. Operation of a large capacity cesspool after this date is a violation of federal regulations and subject to enforcement and fines. If you have any questions about LCC, please contact the Region 9 LLC Coordinator at r9_lcc_coordinator@epa.gov." (Appendix L)

The Project wastewater system will conform to applicable provisions of the HAR, Chapter 11-62, and will not involve the operation of a Large Capacity Cesspool.

During the Draft EA public comment period, the ENV wrote:

> *"The Department of Environmental Services has no comment."* (Appendix L)

4.6.3 Drainage System

According to the Storm Water Utilities map on the CCH GIS website, there is an existing drainage system along Meheula Parkway fronting the Project site. The drainage system consists of several catch basins and piping ranging in diameter from 36-inch to 42-inch. The pipe runs across Kamehameha Highway and discharges into a CCH drainage channel.

Per the Flood Hazard Assessment Tool, the parcel is located in Zone D of the FEMA flood boundaries as shown on FEMA map number 15003C0228F. Zone D is defined as areas of undetermined risk. These areas have the possibility of flood hazards, but there are no flood hazard analyses conducted to determine probability.

The Project site consists of an open, landscaped area and a parking lot. A topographic survey was conducted by Sam O. Hirota, Inc. in March 2025, which shows the site generally slopes from east to west. Stormwater generated on the parking lot's surface flows toward the landscaping or to the catch basin located in the southwest corner of the parking lot. The catch basin is connected to the County's drainage system along Meheula Parkway via an 18-inch pipe. There are also existing drain inlets to the northwest of the Project site, along the existing walkway to the track and field facilities, which capture any overflow stormwater runoff. Runoff calculations for the existing site conditions during a 10-year, 1-hour storm event were estimated using the Rational Method as outlined in the CCH Storm Water BMP Guide for New and Redevelopment (2017). Existing site conditions generate approximately 3.48 cubic feet per second (cfs) of stormwater runoff. See the Existing Hydrology and Hydrology Calculations exhibits of the Civil Due Diligence Report attached as Appendix J.

Potential Impacts and Mitigation Measures of the Proposed Project

During the pre-Assessment consultation process, the Chair of NB25 wrote:

- *"Provide a pre-/post-development hydrology analysis; ensure no net increase in downstream runoff and identify receiving drainage/outfalls.*
- *Integrate Low-Impact Development features (bioretention, permeable paving, green roofs/planters, on-site detention) sized for design storms; include native landscaping, and an operations and maintenance plan with funding responsibility."* (Appendix A)

The proposed development will increase stormwater runoff due to the addition of impervious surfaces. However, the proposed project site will be graded in such a way as to not adversely impact adjacent properties or roadways.

The runoff for a 10-year, 1-hour storm for the developed conditions was calculated using the Rational Method. The proposed development will generate approximately 10.36 cfs of stormwater runoff without mitigation measures. However, according to the HAR Title 20 Chapter 3, Rules Relating to Water Quality (2017) by the CCH, permanent post-construction BMPs are required to mitigate and treat the increase in stormwater runoff from the proposed development. The master plan site layout includes several vegetated areas throughout the site. Stormwater generated on the site's impervious surfaces will be directed to the vegetated areas, which will house drainage solutions that may include storm drain inlets, vegetated swales, etc. All drainage solutions and systems will be designed to the DPP's Storm Drainage Standards (2017).

4.6.4 Electrical and Telecommunications Systems

The Project site is served by the Hawaiian Electric Company (HECO) for electrical service and is currently served by Hawaiian Telcom for telephone service and Spectrum (formerly Oceanic Time Warner Cable) for cable TV service.

During the pre-Assessment consultation period, Hawaiian Telcom wrote:

> *"Attach[ed] you will find an update of approx. location of HT UG Infrastructure location of this project and Hawaiian Telcom Standards. As projects within the Mililani High*

> *School Teacher Workforce Housing Project Area proceed, please provide more detailed plans to Hawaiian Telcom to review."* (Appendix A)

During the Draft EA public comment period, HECO wrote:

> *"Hawaiian Electric Company has no objections to the proposed project. Please note that if Hawaiian Electric has existing infrastructure on the subject property, continued access will be necessary for the maintenance of our infrastructure. Also, should the project impact existing Hawaiian Electric facilities, please contact us."* (Appendix L)

Potential Impacts of the Proposed Project

The proposed Project is not anticipated to impact HECO, Hawaiian Telcom, or Spectrum underground utilities in the area. If existing HECO infrastructure is found within the Project site, plans will be revised to ensure continued maintenance access.

4.6.5 Gas

During the pre-Assessment consultation process, Hawai'i Gas wrote:

> *"In response to your letter dated September 5, 2025, it has been determined that the area is currently clear of gas utility facilities."* (Appendix A)

Potential Impacts of the Proposed Project

The proposed project will not impact any current Hawai'i Gas facilities or infrastructure.

4.6.6 Solid Waste

Solid waste generated on the MHS campus is currently collected regularly by the CCH.

Potential Impacts and Mitigation Measures of the Proposed Project

During the construction phase, solid waste generated at the site is anticipated to increase over current conditions. The additional waste is expected to include materials from demolition, grading, construction and landscaping activities. Any demolition or construction waste generated by the Project will be disposed of at a solid waste disposal facility that complies with the applicable provisions (HAR Chapter 11-58.1 "Solid Waste Management Control"). Solid waste that cannot be recycled will be disposed of at landfills, the incinerator, or transfer stations. A waste-to-energy combustor, H-POWER (Honolulu Program of Waste Energy Recovery), is located at the Campbell Industrial Park and incinerates about 1,800 tons of combustible waste per day. The electricity generated is bought by HECO. Currently, the H-POWER facility receives all residential and commercial packer truck waste on the island. Waste contractors will be asked to submit disposal receipts and invoices to ensure proper disposal of waste. The proposed Project will also comply with the provisions of HAR Chapters 11-260 to 11-280, relating to hazardous waste.

In the long term, additional solid waste may be generated by the proposed Project. The amount of new solid waste can be accommodated by existing waste infrastructure. In addition, design elements may be considered to facilitate the separation and collection of materials for recycling.

During the Draft EA public comment period, the ENV wrote:

> *"The Department of Environmental Services has no comment."* (Appendix L)

4.7 PUBLIC SERVICES AND FACILITIES

During the pre-Assessment consultation process, and again during the Draft EA public review period, the CCH Department of Design and Construction wrote:

> *"The Department of Design and Construction has no comments to offer at this time."* (Appendix A and Appendix L)

During the Draft EA public comment period, the CCH Department of Facility Maintenance wrote: *"We have no comments to offer at this time."* (Appendix L)

4.7.1 Police Protection

The Project site lies within Honolulu Police Department's (HPD's) Patrol District 2 (Wahiawā/Mililani/North Shore), Sector 2, and the nearest station is the Wahiawā Police Station (330 North Cane Street), approximately 14 minutes' drive time (approximately 4.5 miles) north of the Project site (Figure 12: Public Facilities).

Potential Impacts and Mitigation Measures of the Proposed Project

During the pre-Assessment consultation process, the HPD wrote:

> *"Based on the information provided, the Honolulu Police Department recommends providing adequate notice to area residents and businesses prior to any road closures, as any impact to pedestrian and/or vehicular traffic could lead to complaints."* (Appendix A)

During construction, the Applicant will provide periodic updates on construction-related traffic events to NB25. Although there may be an unavoidable and occasional need for police services by residents and guests, the Project is not expected to significantly increase the need for police services. Additionally, the Proposed Project is not expected to have a long-term adverse impact on the HPD or their ability to service the community. No mitigation measures are proposed.

4.7.2 Fire Protection

The Mililani Fire Station 36 is the closest fire station to the Project site (Figure 12: Public Facilities), located at 95-269 Kīpapa Drive, approximately 3 minutes or 0.8 mile north of the Project site. The closest fire hydrant is located approximately 100 feet away from the Project site.

According to the Civil Due Diligence report (Appendix J), site fire protection will also be provided by the BWS potable water system. In a letter dated September 17, 2025 (see Attachment B of the Civil Due Diligence Report), BWS provided calculated flow data for the nearby fire hydrants. Based on the calculated data, the fire hydrants nearest the project site (C00902, C00903 and C01574) all meet the fire flow requirements of 1,500 gpm. However, this data was calculated based on the existing design of the water system and is not indicative of actual field conditions. To better determine flows available to the project site, on-site pressure readings at various times of the day

will need to be recorded. All on-site fire protection requirements will be coordinated with the Fire Prevention Bureau of the HFD (see Attachment C of the Civil Due Diligence Report).

Potential Impacts and Mitigation Measures of the Proposed Project

During the pre-Assessment consultation process, the HFD wrote:

1. *"Fire apparatus access roads shall be provided such that any portion of the facility or any portion of an exterior wall of the first story of the building is located not more than 150 feet (46 meters) from fire apparatus access roads as measured by an approved route around the exterior of the building or facility. (National Fire Protection Association [NFPA] 1; 2021 Edition, Sections 18.2.3.2.2).*

   A fire apparatus access road shall extend to within 50 feet (15 meters) of at least one exterior door that can be opened from the outside and that provides access to the interior of the building. (NFPA 1; 2021 Edition, Section 18.2.3.2.1.).

2. *Fire apparatus access roads shall be in accordance with NFPA 1, 2021 Edition, Section 18.2.3.*

3. *An approved water supply capable of supplying the required fire flow for fire protection shall be provided to all premises upon which facilities, buildings, or portions of buildings are hereafter constructed or moved into the jurisdiction. The approved water supply shall be in accordance with NFPA 1, 2021 Edition, Sections 18.3 and 18.4.*

4. *Civil drawings submitted to your department shall be routed to the HFD for review and approval."* (Appendix A)

The above comments are standard comments from the HFD and will be addressed by the project designers during the design of the Project. Although there may be an unavoidable and occasional need for fire protection services by residents, the Project is not expected to significantly increase the need for fire protection services. Additionally, the Proposed Project is not expected to have a long-term adverse impact on the HFD or their ability to service the community. No mitigation measures are proposed.

During the Draft EA public comment period, the HFD wrote:

> *"The Honolulu Fire Department reviewed the submitted information and has no comment at this time."* (Appendix L)

4.7.3 Health Care Services

The closest emergency room is located approximately 4.1 miles (or 12 minutes) away at Wahiawā Queen's Medical Hospital (128 Lehua Street) (see Figure 12: Public Facilities). There are also urgent care clinics in Mililani, including: Straub Mililani Clinic (95-1249 Meheula Parkway, Unit 187), and The Queen's Health Care Center – Mililani Clinic (95-1249 Meheula Parkway).

Potential Impacts and Mitigation Measures of the Proposed Project

Although there may be an unavoidable and occasional need for emergency health care services by residents and guests, the Project is not expected to significantly increase the need for emergency

services. Additionally, the Proposed Project is not expected to have a long-term adverse impact on emergency medical providers or their ability to service the community. No mitigation measures are proposed.

4.7.4 Recreational Facilities

Nearby public and private recreational facilities include: YMCA of Hawai‘i – Mililani Branch, Michael S. Nakamura Neighborhood Park, Mililani Waena Neighborhood Park, Kīpapa Neighborhood Park, and Mililani Neighborhood Park. Refer to Figure 12: Public Facilities.

Potential Impacts and Mitigation Measures of the Proposed Project

The proposed Project will not displace any existing public recreational facilities; however, it will add to the resident population and create an additional demand for public recreational facilities in the vicinity of the Project. No mitigation measures are proposed.

4.7.5 Schools

In addition to MHS, the DOE public schools within Mililani Town and Mililani Mauka include Mililani Uka Elementary School, Mililani Waena Elementary School, Kīpapa Elementary School, Mililani Mauka Elementary School, Mililani ‘Ike Elementary School, and Mililani Middle School. The DOE schools in closest proximity to the Project site are Mililani Waena Elementary School and Kīpapa Elementary School (Figure 12: Public Facilities). Other non-DOE schools in Mililani include several pre-schools (Rainbow School Mililani, Nā Maka Kindergarten Prep School, and The Cole Academy - Mililani) as well as a private preK-12 school (Hanalani Schools).

Potential Impacts and Mitigation Measures of the Proposed Project

The Proposed Project will offer up to 95 residential units and may increase enrollment in area public schools. At this time, it is not known exactly how many future residents of the Proposed Project will attend area public schools, however, it is estimated that there will be 280 new residents living in the residential units, and according to the Census Reporter, 15.4% of the area population is between 5-19 years of age. Therefore, a conservative estimate of the total number of school-aged children who may attend area schools from the Proposed Project is estimated to be 43 students.

During the pre-Assessment consultation process, the DOE Office of Facilities and Operations wrote:

> *“The Department appreciates Pacific Housing Assistance Corporation’s (Applicant) offer to provide affordable housing options to Hawaii's education workforce. Based on the information provided, the Department understands that the Project will be developed on the southwest portion of the Mililani High School campus and believes that there will be direct impacts on school operations.*
>
> *The Department looks forward to the opportunity to review and provide comments on specific details that it expects to be included in the Draft Environmental Assessment. Specifically, the Department looks forward to reviewing and providing comments over the Project's impact on school operations and security, pedestrian and vehicular*

transportation, and the future expansion of school facilities. The Applicant should also be aware that the Department has initiated a capital improvements project for a covered tennis court project, which is currently in design and is directly adjacent to the proposed site of the Project." (Appendix A)

During the Draft EA public comment period, the DOE Office of Facilities and Operations wrote:

"The Department recognizes the importance of providing affordable housing for our educators and views the Project as an opportunity to support public education. As noted in the DEA, the Project will be developed on the southwest portion of the Mililani High School (MHS) campus. Based on the location and size of the Project, the Department believes that there will be significant impacts on school operations that require careful consideration.

MHS is a vital community asset, and maintaining its full functionality must remain a top priority. It is, therefore, essential that the Project does not intrude upon or displace existing instructional spaces, athletic fields, parking areas, or student gathering areas. Any reduction in these resources could significantly disrupt the educational environment and reduce the quality of student life on campus. With this in mind, the Department offers the following comments to the DEA.

<u>Department Land Ownership and Use of School Property</u>
In Section 1.4, the Department would like to clarify that by operation of law, the land underlying the Project is owned by the State of Hawaii, Department of Education. The Department would also like to note that as of the date of this letter, final approval for use of the school property for the Project is still pending. The Department further notes that before the Department approves any final disposition of land, a subdivision to create a legal leasehold parcel will be required. In addition, a land lease for the Project will be necessary.

The Department's approval of land disposition for this Project is conditioned upon a written commitment by the Hawaii School Facilities Authority (SFA) and/or Project developer that it will be responsible for any and all land disposition documentation and related fees and costs. These fees· and costs shall cover all services needed to secure the final disposition of land, including subdivision approval, surveys, applicable taxes and government fees (such as State of Hawaii Conveyance Tax), and recordation with the Land Court and/or Bureau of Conveyances of the State of Hawaii to the satisfaction of the Department.

As an additional condition of its approval, the Department will also require a written commitment by the SFA and Project developer that:

- *No future easements, utility corridors, or access routes created for the Project will limit construction, expansion, or operation of the MHS facilities and infrastructure by the Department without the Department's prior written approval. Of particular note, the Department has already disclosed to the SFA that it has a project in design to improve an existing tennis court which is directly adjacent to the proposed*

Project. The DEA identifies this improvement as an 'airnasium.' To avoid confusion and misunderstanding, the Department would prefer if the DEA could be revised to identify its project as a 'covered play court.'

- *A 48-stall parking lot which will be displaced as a result of the Project, will be relocated to another location on the MHS campus subject to review and approval by the Department, at no cost or expense to the Department or MHS, and shall be completed, inspected and approved by the Department before any construction of the Project shall commence.*

Project Impact on School Operations

The Department will require that a construction management plan be established to minimize noise, dust, and other disruptions, especially during school hours, to avoid interference with student learning and school operations.

The Department also emphasizes the need for clear and durable physical separation between the Project and school operations. As noted in the DEA, the SFA and Project developers will be required to work with the Department on the appropriate installation of a perimeter fence, secured entry, and separate vehicular and pedestrian circulation from the high school campus. This coordination with the Department shall include, but not be limited to:

- *The Department's review and approval of final construction drawings to include a campus interface and security plan detailing fencing, access controls, lighting, surveillance considerations, and coordination protocols for school day and after-hour operations;*
- *The Project property manager/management team's assurance that the Project's residents shall not be allowed to traverse onto the school campus during and after school hours;*
- *An operations Memorandum of Agreement/Memorandum of Understanding (MOA/MOU - separate from the ground lease) for the Project shall be fully executed concurrently with the City and County of Honolulu's issuance of a Certificate of Occupancy for the Project. The MOA/MOU shall address:*

    1. *The Project's developer and property manager shall coordinate project activities with MHS administration for after hour events that may affect school operations;*
    2. *After hours coordination for school activities, athletic events, and community events;*
    3. *Emergency planning, including lockdown/evacuation routes;*
    4. *Security and safety measures to minimize and avoid students entering the Project grounds and/or users of the Project entering school grounds; and*
    5. *Parking management, shared-use scheduling, and noise/light considerations.*

Traffic Safety. School Access, and Event Operations
Campus safety and security require careful consideration. The Department looks forward to reviewing further details regarding planned safety measures and is interested in how the Project will prevent unauthorized access and safeguard student safety, particularly during school hours. Addressing these physical and operational security measures early in the design process will be essential to the Project's successful integration with the MHS campus.

The DEA should recognize the Department's commitment to the Harm to Students Law (Act 156, Session Laws of Hawaii 2024). Act 156 requires the Department to restrict campus access by individuals found to have inflicted harm on students. Maintaining student safety becomes significantly more complex when non-school functions operate on the same site or in close proximity to the school." (Appendix L)

There may be temporary impacts (such as dust, traffic, and noise – see Sections 3.3, 4.2.1, and 4.2.4, respectively) on school operations during construction, which will be coordinated with the school to mitigate such impacts. Post-construction, the operations of the proposed Project are not anticipated to have an adverse impact on school operations, as residents of the Project will likely not be onsite during school hours; however, the school's operations may have impacts on the housing, particularly after school hours and on weekends. The Project's property manager will coordinate with the school for events outside of normal school hours (such as the weekly farmer's market) that may impact the housing and its residents. Physical separation will be established between the school and Project with a perimeter fence, and separate and secured vehicular and pedestrian entry points. The Project team has held numerous meetings with the MHS Principal and the DOE to discuss the Project (refer to Section 1.8.2 Community Outreach for a list of meetings to date). SFA will continue to coordinate with MHS on appropriate safety and security measures and design features, as well as enforcement of the Harm to Students Law (Act 156, Session Laws of Hawai‘i 2024).

During the Draft EA public comment period, the DPP wrote:

"The Final EA should be updated to include accurate information about the surroundings. This includes all other foreseeable projects within the vicinity." (Appendix L)

The only known projects proposed in the Project vicinity include: the proposed DOE covered play court, and a crosswalk planned at the intersection of Hikikaulia Street and Meheula Parkway (and is currently in the design and planning phase by the DTS). Several meetings were held with DOE regarding the covered play court, and as a result, the proposed Project site has been reduced and designed to be setback 30 feet from the DOE covered play court. A crosswalk at the intersection of Hikikaulia Street and Meheula Parkway will not only benefit students of MHS, but residents of the proposed Project as well.

No portable classrooms will need to be demolished as part of the proposed Project.

5.0 LAND USE CONFORMANCE

State and County land use plans and policies and required permits and approvals relevant to the Project are described below.

5.1 STATE OF HAWAIʻI

5.1.1 State Environmental Review Law, Chapter 343, Hawaiʻi Revised Statutes and Chapter 11-200.1, Hawaiʻi Administrative Rules

The State Environmental Review Law (HRS Chapter 343, Environmental Impact Statement Law and HAR Chapter 11-200.1, Environmental Impact Statement Rules) requires an environmental review for actions that propose:

- The use of State or County lands or the use of State or County funds

Discussion: Preparation of this EA is in compliance with the provisions of HRS Chapter 343 and HAR Chapter 11-200.1. HRS Section 343-5 established nine "triggers" that require environmental review, i.e., either an EA or an Environmental Impact Statement (EIS). The use of State or County lands or funds is one such trigger, and the Proposed Project involves the use of State land and funds.

5.1.2 State Land Use Law, Chapter 205, Hawaiʻi Revised Statutes

The State Land Use Law (HRS Chapter 205), establishes the State Land Use Commission (LUC) and authorizes this body to designate all lands in the State into one of four districts: Urban, Rural, Agricultural, or Conservation. These districts are defined and mapped by the State LUC in order to ensure compatibility with neighboring land uses and protection of public health.

The proposed Project is located within the State Urban District. According to HRS §205-2(b): "Urban districts shall include activities or uses as provided by ordinances or regulations of the county within which the urban district is situated."

5.1.3 Coastal Zone Management Act, Chapter 205A, Hawaiʻi Revised Statutes

During the pre-Assessment consultation process, the OPSD wrote:

> *"OPSD anticipates that the Draft EA will discuss the Proposed Action with respect to the policies and objectives in Hawai'i Revised Statutes (HRS) Chapter 205A and 226, the Coastal Zone Management and Hawai'i State Planning Act, respectively."* (Appendix A)

During the Draft EA comment period, the OPSD wrote:

> *"OPSD acknowledges that the DEA addresses both Hawai'i Revised Statutes (HRS) Chapter 205A and Chapter 226—the Coastal Zone Management Act and the Hawai'i State Planning Act, respectively. OPSD appreciates the table identifying the areas where this Project supports these policies."* (Appendix L)

The National Coastal Zone Management (CZM) Program was created through passage of the CZM Act of 1972. Hawai'i's CZM Program, adopted as HRS Chapter 205A, provides a basis for protecting, restoring and responsibly developing coastal communities and resources. The CZM Area, as defined in HRS Chapter 205A, includes all the lands of the State. Therefore, the proposed Project lies within the CZM Area. However, no portion of the Project site is within the Special Management Area (SMA).

The CZM Program aims to provide recreational opportunities, protect historic resources, protect scenic and open space resources, protect coastal ecosystems, provide facilities for economic development, reduce hazards, and manage development. Program objectives and applicability to the proposed Project are discussed in Table 10 below. The Hawai'i State Planning Act is discussed in Section 5.1.4

Table 10: Coastal Zone Management Act, Chapter 205A, HRS

COASTAL ZONE MANAGEMENT ACT, CHAPTER 205A, HRS (Key: S = Supportive, N/S = Not Supportive, N/A = Not Applicable)	**S**	**N/S**	**N/A**
Recreational Resources			
Objective: *(A) Provide coastal recreational opportunities accessible to the public.*			
Policies:			
(A) Improve coordination and funding of coastal recreational planning and management; and			X
(B) Provide adequate, accessible, and diverse recreational opportunities in the coastal zone management area by:			
(i) Protecting coastal resources uniquely suited for recreational activities that cannot be provided in other areas;			X
(ii) Requiring replacement of coastal resources having significant recreational value including, but not limited to, surfing sites, fishponds, and sand beaches, when such resources will be unavoidably damaged by development; or requiring reasonable monetary compensation to the State for recreation when replacement is not feasible or desirable;			X
(iii) Providing and managing adequate public access, consistent with conservation of natural resources, to and along shorelines with recreational value;			X
(iv) Providing an adequate supply of shoreline parks and other recreational facilities suitable for public recreation;			X
(v) Ensuring public recreational uses of county, state, and federally owned or controlled shoreline lands and waters having recreational value consistent with public safety standards and conservation of natural resources;			X
(vi) Adopting water quality standards and regulating point and nonpoint sources of pollution to protect, and where feasible, restore the recreational value of coastal waters;	X		
(vii) Developing new shoreline recreational opportunities, where appropriate, such as artificial lagoons, artificial beaches, and artificial reefs for surfing and fishing; and			X

COASTAL ZONE MANAGEMENT ACT, CHAPTER 205A, HRS (Key: S = Supportive, N/S = Not Supportive, N/A = Not Applicable)	**S**	**N/S**	**N/A**
(viii) Encouraging reasonable dedication of shoreline areas with recreational value for public use as part of discretionary approvals or permits by the land use commission, board of land and natural resources, and county authorities; and crediting such dedication against the requirements of section 46-6.			X
Discussion: The proposed Project is not a coastal development and is not located on the coastline. Therefore, policies regarding shoreline recreation resources and shoreline public access are not applicable to the proposed Project. The water quality standards are discussed under the Coastal Ecosystems objectives and policies.			
Historic Resources			
Objective: *(A) Protect, preserve, and, where desirable, restore those natural and manmade historic and prehistoric resources in the coastal zone management area that are significant in Hawaiian and American history and culture.*			
Policies:			
(A) Identify and analyze significant archaeological resources;	X		
(B) Maximize information retention through preservation of remains and artifacts or salvage operations; and			X
(C) Support state goals for protection, restoration, interpretation, and display of historic resources.	X		
Discussion: Due to the extensive disturbance that the Project Site has experienced in developing the existing school campus, it is unlikely that subsurface historic resources are present. However, the Applicant has contracted the preparation of a new archaeological study. Should any archaeological or cultural remains be encountered during construction, all work in the immediate vicinity of the find will cease and the SHPD will be contacted for establishment of appropriate mitigation in accordance with HRS Chapter 6E.			
Scenic and Open Space Resources			
Objective: *(A) Protect, preserve, and, where desirable, restore or improve the quality of coastal scenic and open space resources.*			
Policies:			
(A) Identify valued scenic resources in the coastal zone management area;			X
(B) Ensure that new developments are compatible with their visual environment by designing and locating such developments to minimize the alteration of natural landforms and existing public views to and along the shoreline;			X
(C) Preserve, maintain, and, where desirable, improve and restore shoreline open space and scenic resources; and			X
(D) Encourage those developments that are not coastal dependent to locate in inland areas.	X		
Discussion: The Project is not coastal dependent, and is located inland on an already-developed parcel that currently contains a school campus. The Project is approximately 4.6 miles from the nearest shoreline (Pearl Harbor Middle Loch) and will not block views to and along the shoreline.			

COASTAL ZONE MANAGEMENT ACT, CHAPTER 205A, HRS (Key: S = Supportive, N/S = Not Supportive, N/A = Not Applicable)	**S**	**N/S**	**N/A**
Coastal Ecosystems			
Objective: *(A) Protect valuable coastal ecosystems, including reefs, from disruption and minimize adverse impacts on all coastal ecosystems.*			
Policies:			
(A) Exercise an overall conservation ethic, and practice stewardship in the protection, use, and development of marine and coastal resources;			X
(B) Improve the technical basis for natural resource management;			X
(C) Preserve valuable coastal ecosystems, including reefs, of significant biological or economic importance;			X
(D) Minimize disruption or degradation of coastal water ecosystems by effective regulation of stream diversions, channelization, and similar land and water uses, recognizing competing water needs; and			X
(E) Promote water quantity and quality planning and management practices that reflect the tolerance of fresh water and marine ecosystems and maintain and enhance water quality through the development and implementation of point and nonpoint source water pollution control measures.	X		
Discussion: The Project will not directly impact coastal ecosystems as it will be approximately 4.6 miles from the nearest shoreline. BMPs will be implemented during construction to prevent erosion and stormwater runoff during the construction phase.			
Economic Uses			
Objective: *(A) Provide public or private facilities and improvements important to the State's economy in suitable locations.*			
Policies:			
(A) Concentrate coastal dependent development in appropriate areas;			X
(B) Ensure that coastal dependent development such as harbors and ports, and coastal related development such as visitor industry facilities and energy generating facilities, are located, designed, and constructed to minimize adverse social, visual, and environmental impacts in the coastal zone management area; and			X
(C) Direct the location and expansion of coastal dependent developments to areas presently designated and used for such developments and permit reasonable long-term growth at such areas, and permit coastal dependent development outside of presently designated areas when:			
(i) Use of presently designated locations is not feasible;			X
(ii) Adverse environmental effects are minimized; and			X
(iii) The development is important to the State's economy.			X
Discussion: The Proposed Project is not a coastal dependent development.			
Coastal Hazards			
Objective: *(A) Reduce hazard to life and property from tsunami, storm waves, stream flooding, erosion, subsidence, and pollution.*			

COASTAL ZONE MANAGEMENT ACT, CHAPTER 205A, HRS (Key: S = Supportive, N/S = Not Supportive, N/A = Not Applicable)	**S**	**N/S**	**N/A**
Policies:			
(A) Develop and communicate adequate information about storm wave, tsunami, flood, erosion, subsidence, and point and nonpoint source pollution hazards;	X		
(B) Control development in areas subject to storm wave, tsunami, flood, erosion, hurricane, wind, subsidence, and point and nonpoint source pollution hazards;			X
(C) Ensure that developments comply with requirements of the Federal Flood Insurance Program; and	X		
(D) Prevent coastal flooding from inland projects.			X
Discussion: Information regarding flooding, tsunami evacuation zones, hurricane storm surge hazards and SLR are presented in Section 3.5 of this EA.			
Managing Development			
Objective: *(A) Improve the development review process, communication, and public participation in the management of coastal resources and hazards.*			
Policies:			
(A) Use, implement, and enforce existing law effectively to the maximum extent possible in managing present and future coastal zone development;			X
(B) Facilitate timely processing of applications for development permits and resolve overlapping or conflicting permit requirements; and			X
(C) Communicate the potential short and long-term impacts of proposed significant coastal developments early in their life cycle and in terms understandable to the public to facilitate public participation in the planning and review process.	X		
Discussion: Early consultation (scoping) comments were obtained, incorporated into this EA and are reproduced in Appendix A: Pre-Assessment Consultation Comments and Responses. In addition, this EA discusses potential impacts and mitigation measures of the proposed Project and will provide an opportunity for input during the Draft EA Public Comment period.			
Public Participation			
Objective: *(A) Stimulate public awareness, education, and participation in coastal management.*			
Policies:			
(A) Promote public involvement in coastal zone management processes;	X		
(B) Disseminate information on coastal management issues by means of educational materials, published reports, staff contact, and public workshops for persons and organizations concerned with coastal issues, developments, and government activities; and			X
(C) Organize workshops, policy dialogues, and site-specific mediations to respond to coastal issues and conflicts.			X
Discussion: Early consultation (scoping) comments were obtained, incorporated into this EA and are reproduced in Appendix A: Pre-Assessment Consultation Comments and Responses. In addition, this EA discusses potential impacts and mitigation			

COASTAL ZONE MANAGEMENT ACT, CHAPTER 205A, HRS (Key: S = Supportive, N/S = Not Supportive, N/A = Not Applicable)	**S**	**N/S**	**N/A**
measures of the proposed Project and will provide an opportunity for input during the Draft EA Public Comment period.			
Beach Protection			
Objective: *(A) Protect beaches for public use and recreation.*			
Policies:			
(A) Locate new structures inland from the shoreline setback to conserve open space, minimize interference with natural shoreline processes, and minimize loss of improvements due to erosion;			X
(B) Prohibit construction of private erosion-protection structures seaward of the shoreline, except when they result in improved aesthetic and engineering solutions to erosion at the sites and do not interfere with existing recreational and waterline activities; and			X
(C) Minimize the construction of public erosion-protection structures seaward of the shoreline.			X
(D) Prohibit private property owners from creating a public nuisance by inducing or cultivating the private property owner's vegetation in a beach transit corridor; and			X
(E) Prohibit private property owners from creating a public nuisance by allowing the private property owner's unmaintained vegetation to interfere or encroach upon a beach transit corridor.			X
Discussion: The proposed Project is located approximately 4.6 miles from the nearest shoreline, and does not involve shoreline erosion protection structures, or actions that prohibit transit to the shoreline or lateral shoreline access.			
Marine Resources			
Objective: *(A) Promote the protection, use, and development of marine and coastal resources to assure their sustainability.*			
Policies:			
(A) Ensure that the use and development of marine and coastal resources are ecologically and environmentally sound and economically beneficial;			X
(B) Coordinate the management of marine and coastal resources and activities to improve effectiveness and efficiency;			X
(C) Assert and articulate the interests of the State as a partner with federal agencies in the sound management of ocean resources within the United States exclusive economic zone;			X
(D) Promote research, study, and understanding of ocean processes, marine life, and other ocean resources in order to acquire and inventory information necessary to understand how ocean development activities relate to and impact upon ocean and coastal resources; and			X
(E) Encourage research and development of new, innovative technologies for exploring, using, or protecting marine and coastal resources.			X

COASTAL ZONE MANAGEMENT ACT, CHAPTER 205A, HRS (Key: S = Supportive, N/S = Not Supportive, N/A = Not Applicable)	S	N/S	N/A
Discussion: The proposed Project will be located approximately 4.6 miles from the nearest shoreline and will not impact marine or coastal resources.			

5.1.4 Hawai‘i State Planning Act, Chapter 226, Hawai‘i Revised Statutes

During the pre-Assessment consultation process, the OPSD wrote:

> *“OPSD anticipates that the Draft EA will discuss the Proposed Action with respect to the policies and objectives in Hawai‘i Revised Statutes (HRS) Chapter 205A and 226, the Coastal Zone Management and Hawai‘i State Planning Act, respectively.”* (Appendix A)

During the Draft EA comment period, the OPSD wrote:

> *“OPSD acknowledges that the DEA addresses both Hawai‘i Revised Statutes (HRS) Chapter 205A and Chapter 226—the Coastal Zone Management Act and the Hawai‘i State Planning Act, respectively. OPSD appreciates the table identifying the areas where this Project supports these policies.”* (Appendix L)

The Hawai‘i State Plan, HRS Chapter 226 (2007) provides guidelines for the future growth of the State of Hawai‘i. The Hawai‘i State Plan identifies goals, objectives, policies, and priorities for allocating the State's resources, including public funds, services, human resources, land, energy, and water. The Plan was enacted to achieve “a desired physical environment, characterized by beauty, cleanliness, quiet, stable natural systems, and uniqueness, that enhances the mental and physical well-being of the people.” Table 11 below outlines the proposed Project’s conformance with each theme, goal, objective, policy, and guideline of the Plan.

5.1.4.1 Hawai‘i State Plan, Part I: Overall Theme, Goals, Objectives and Policies

Table 11: Hawai‘i State Plan, Chapter 226, HRS – Part I

HAWAI‘I STATE PLAN, CHAPTER 226, HRS – PART I. OVERALL THEME, GOALS, OBJECTIVES AND POLICIES (Key: S = Supportive, N/S = Not Supportive, N/A = Not Applicable)	S	N/S	N/A
HRS § 226-1: Findings and Purpose			
HRS § 226-2: Definitions			
HRS § 226-3: Overall Theme.			
Hawai‘i’s people, as both individuals and groups, generally accept and live by a number of principles or values which are an integral part of society. This concept is the unifying theme of the State Plan. The following principles or values are established as the overall theme of the Hawai‘i State Plan: (1) Individual and family self-sufficiency refers to the rights of people to maintain as much self-reliance as possible. It is an expression of the value of independence, in other words, being able to freely pursue personal interests and goals. Self-sufficiency means that individuals and families can express and maintain their own self-interest so long as that self-interest does not adversely affect the general welfare. Individual freedom and individual achievement are possible only by reason of other people in society, the institutions,			

HAWAI'I STATE PLAN, CHAPTER 226, HRS – PART I. OVERALL THEME, GOALS, OBJECTIVES AND POLICIES (Key: S = Supportive, N/S = Not Supportive, N/A = Not Applicable)	S	N/S	N/A
arrangements and customs that they maintain, and the rights and responsibilities that they sanction. (2) Social and economic mobility refers to the right of individuals to choose and to have the opportunities for choice available to them. It is a corollary to self-sufficiency. Social and economic mobility means that opportunities and incentives are available for people to seek out their own levels of social and economic fulfillment. (3) Community or social well-being is a value that encompasses many things. In essence, it refers to healthy social, economic, and physical environments that benefit the community as a whole. A sense of social responsibility, of caring for others and for the well-being of our community and of participating in social and political life, are important aspects of this concept. It further implies the aloha spirit--attitudes of tolerance, respect, cooperation and unselfish giving, within which Hawai'i's society can progress. *One of the basic functions of our society is to enhance the ability of individuals and groups to pursue their goals freely, to satisfy basic needs and to secure desired socio-economic levels. The elements of choice and mobility within society's legal framework are fundamental rights. Society's role is to encourage conditions within which individuals and groups can approach their desired levels of self-reliance and self-determination. This enables people to gain confidence and self-esteem; citizens contribute more when they possess such qualities in a free and open society.*			
Government promotes citizen freedom, self-reliance, self-determination, social and civic responsibility and goals achievement by keeping order, by increasing cooperation among many diverse individuals and groups, and by fostering social and civic responsibilities that affect the general welfare. The greater the number and activities of individuals and groups, the more complex government's role becomes. The function of government, however, is to assist citizens in attaining their goals. Government provides for meaningful participation by the people in decision-making and for effective access to authority as well as an equitable sharing of benefits. Citizens have a responsibility to work with their government to contribute to society's improvement. They must also conduct their activities within an agreed-upon legal system that protects human rights.			
Discussion: The proposed Project is supportive of social/economic mobility and community/social well-being, as teacher workforce housing provides opportunities and incentives for teachers to seek their own levels of social and economic fulfillment.			
HRS § 226-4: State Goals.			
In order to guarantee, for the present and future generations, those elements of choice and mobility that insure that individuals and groups may approach their desired levels of self-reliance and self-determination, it shall be the goal of the State to achieve:			

HAWAIʻI STATE PLAN, CHAPTER 226, HRS – PART I. OVERALL THEME, GOALS, OBJECTIVES AND POLICIES **(Key: S = Supportive, N/S = Not Supportive, N/A = Not Applicable)**	**S**	**N/S**	**N/A**
(1) A strong, viable economy, characterized by stability, diversity and growth that enables fulfillment of the needs and expectations of Hawaiʻi's present and future generations. (2) A desired physical environment, characterized by beauty, cleanliness, quiet, stable natural systems, and uniqueness, that enhances the mental and physical well-being of the people. (3) Physical, social and economic well-being, for individuals and families in Hawaiʻi, that nourishes a sense of community responsibility, of caring and of participation in community life.			
Discussion: The proposed Project is supportive of self-reliance as housing is crucial to the physical, social, and economic well-being for individuals and families in Hawaiʻi.			
HRS § 226-5: Objectives and policies for population.			
(a) Objective: *It shall be the objective in planning for the State's population to guide population growth to be consistent with the achievement of physical, economic and social objectives contained in this chapter.*			
(b) Policies:			
(1) Manage population growth statewide in a manner that provides increased opportunities for Hawaiʻi's people to pursue their physical, social and economic aspirations while recognizing the unique needs of each county.			X
(2) Encourage an increase in economic activities and employment opportunities on the neighbor islands consistent with community needs and desires.			X
(3) Promote increased opportunities for Hawaiʻi's people to pursue their socio-economic aspirations throughout the islands.			X
(4) Encourage research activities and public awareness programs to foster an understanding of Hawaiʻi's limited capacity to accommodate population needs and to address concerns resulting from an increase in Hawaiʻi's population.			X
(5) Encourage federal actions and coordination among major governmental agencies to promote a more balanced distribution of immigrants among the states, provided that such actions do not prevent the reunion of immediate family members.			X
(6) Pursue an increase in federal assistance for states with a greater proportion of foreign immigrants relative to their state's population.			X
(7) Plan the development and availability of land and water resources in a coordinated manner so as to provide for the desired levels of growth in each geographic area.	X		
Discussion: The Project is sited in an area where urban development for desired levels of growth was long planned (and since developed). Using a portion of the existing MHS is an efficient use of land and existing infrastructure.			

HAWAIʻI STATE PLAN, CHAPTER 226, HRS – PART I. OVERALL THEME, GOALS, OBJECTIVES AND POLICIES (Key: S = Supportive, N/S = Not Supportive, N/A = Not Applicable)	**S**	**N/S**	**N/A**
HRS § 226-6: Objectives and policies for the economy in general.			
(a) Objectives: *Planning for the State's economy in general shall be directed toward achievement of the following objectives:*			
(1) Increased and diversified employment opportunities to achieve full employment, increased income and job choice, and improved living standards for Hawaiʻi's people, while at the same time stimulating the development and expansion of economic activities capitalizing on defense, dual-use, and science and technology assets, particularly on the neighbor islands where employment opportunities may be limited.	X		
(2) A steadily growing and diversified economic base that is not overly dependent on a few industries, and includes the development and expansion of industries on the neighbor islands.			X
(b) Policies:			
(1) Promote and encourage entrepreneurship within Hawaiʻi by residents and nonresidents of the State.			X
(2) Expand Hawaiʻi's national and international marketing, communication, and organizational ties, to increase the State's capacity to adjust to and capitalize upon economic changes and opportunities occurring outside the State.			X
(3) Promote Hawaiʻi as an attractive market for environmentally and socially sound investment activities that benefit Hawaiʻi's people.			X
(4) Transform and maintain Hawaiʻi as a place that welcomes and facilitates innovative activity that may lead to commercial opportunities.			X
(5) Promote innovative activity that may pose initial risks, but ultimately contribute to the economy of Hawaiʻi.			X
(6) Seek broader outlets for new or expanded Hawaiʻi business investments.			X
(7) Expand existing markets and penetrate new markets for Hawaiʻi's products and services.			X
(8) Assure that the basic economic needs of Hawaiʻi's people are maintained in the event of disruptions in overseas transportation.			X
(9) Strive to achieve a level of construction activity responsive to, and consistent with, state growth objectives.			X
(10) Encourage the formation of cooperatives and other favorable marketing arrangements at the local or regional level to assist Hawaiʻi's small scale producers, manufacturers, and distributors.			X
(11) Encourage labor-intensive activities that are economically satisfying and which offer opportunities for upward mobility.			X
(12) Encourage innovative activities that may not be labor-intensive, but may otherwise contribute to the economy of Hawaiʻi.			X

HAWAIʻI STATE PLAN, CHAPTER 226, HRS – PART I. OVERALL THEME, GOALS, OBJECTIVES AND POLICIES **(Key: S = Supportive, N/S = Not Supportive, N/A = Not Applicable)**	**S**	**N/S**	**N/A**
(13) Foster greater cooperation and coordination between the government and private sectors in developing Hawaiʻi's employment and economic growth opportunities.			X
(14) Stimulate the development and expansion of economic activities which will benefit areas with substantial or expected employment problems.			X
(15) Maintain acceptable working conditions and standards for Hawaiʻi's workers.			X
(16) Provide equal employment opportunities for all segments of Hawaiʻi's population through affirmative action and nondiscrimination measures.			X
(17) Stimulate the development and expansion of economic activities capitalizing on defense, dual-use, and science and technology assets, particularly on the neighbor islands where employment opportunities may be limited.			X
(18) Encourage businesses that have favorable financial multiplier effects within Hawaiʻi's economy, particularly with respect to emerging industries in science and technology.			X
(19) Promote and protect intangible resources in Hawaiʻi, such as scenic beauty and the aloha spirit, which are vital to a healthy economy.			X
(20) Increase effective communication between the educational community and the private sector to develop relevant curricula and training programs to meet future employment needs in general, and requirements of new, potential growth industries in particular.			X
(21) Foster a business climate in Hawaiʻi--including attitudes, tax and regulatory policies, and financial and technical assistance programs--that is conducive to the expansion of existing enterprises and the creation and attraction of new business and industry.			X
Discussion: The proposed Project will not have a significant impact on the State's overall economy; however, the Project will involve the provision of teacher workforce housing, which may indirectly contribute to increased employment opportunities and job choice as well as improved living standards for Hawaiʻi's teachers.			
HRS § 226-7: Objectives and policies for the economy – agriculture			
(a) Objectives: *Planning for the State's economy with regard to agriculture shall be directed towards achievement of the following objectives:*			
• Viability of Hawaiʻi's sugar and pineapple industries.			X
• Growth and development of diversified agriculture throughout the State.			X
• An agriculture industry that continues to constitute a dynamic and essential component of Hawaiʻi's strategic, economic, and social well-being.			X

HAWAI'I STATE PLAN, CHAPTER 226, HRS – PART I. OVERALL THEME, GOALS, OBJECTIVES AND POLICIES (Key: S = Supportive, N/S = Not Supportive, N/A = Not Applicable)	**S**	**N/S**	**N/A**
(b) Policies:			
(1) Establish a clear direction for Hawai'i's agriculture through stakeholder commitment and advocacy.			X
(2) Encourage agriculture by making best use of natural resources.			X
(3) Provide the governor and the legislature with information and options needed for prudent decision making for the development of agriculture.			X
(4) Establish strong relationships between the agricultural and visitor industries for mutual marketing benefits.			X
(5) Foster increased public awareness and understanding of the contributions and benefits of agriculture as a major sector of Hawai'i's economy.			X
(6) Seek the enactment and retention of federal and state legislation that benefits Hawai'i's agricultural industries.			X
(7) Strengthen diversified agriculture by developing an effective promotion, marketing, and distribution system between Hawai'i's food producers and consumers in the State, nation, and world.			X
(8) Support research and development activities that strengthen economic productivity in agriculture, stimulate greater efficiency, and enhance the development of new products and agricultural by-products.			X
(9) Enhance agricultural growth by providing public incentives and encouraging private initiatives.			X
(10) Assure the availability of agriculturally suitable lands with adequate water to accommodate present and future needs.			X
(11) Increase the attractiveness and opportunities for an agricultural education and livelihood.			X
(12) In addition to the State's priority on food, expand Hawai'i's agricultural base by promoting growth and development of flowers, tropical fruits and plants, livestock, feed grains, forestry, food crops, aquaculture, and other potential enterprises.			X
(13) Promote economically competitive activities that increase Hawai'i's agricultural self-sufficiency, including the increased purchase and use of Hawai'i-grown food and food products by residents, businesses, and governmental bodies as defined under section 103D-104.			X
(14) Promote and assist in the establishment of sound financial programs for diversified agriculture.			X
(15) Institute and support programs and activities to assist the entry of displaced agricultural workers into alternative agricultural or other employment.			X
(16) Facilitate the transition of agricultural lands in economically nonfeasible agricultural production to economically viable agricultural uses.			X

HAWAI'I STATE PLAN, CHAPTER 226, HRS – PART I. OVERALL THEME, GOALS, OBJECTIVES AND POLICIES **(Key: S = Supportive, N/S = Not Supportive, N/A = Not Applicable)**	**S**	**N/S**	**N/A**
Discussion: The proposed Project will not impact the State's agricultural industry. The Project will involve the provision of teacher workforce housing on an existing school campus in an urbanized area.			
HRS § 226-8: Objectives and policies for the economy – visitor industry			
(a) Objectives: *Planning for the State's economy with regard to the visitor industry shall be directed towards the achievement of the objective of a visitor industry that constitutes a major component of steady growth for Hawai'i's economy.*			
(b) Policies:			
(1) Support and assist in the promotion of Hawai'i's visitor attractions and facilities.			X
(2) Ensure that visitor industry activities are in keeping with the social, economic, and physical needs and aspirations of Hawai'i's people.			X
(3) Improve the quality of existing visitor destination areas by utilizing Hawai'i's strengths in science and technology.			X
(4) Encourage cooperation and coordination between the government and private sectors in developing and maintaining well-designed, adequately serviced visitor industry and related developments which are sensitive to neighboring communities and activities.			X
(5) Develop the industry in a manner that will continue to provide new job opportunities and steady employment for Hawai'i's people.			X
(6) Provide opportunities for Hawai'i's people to obtain job training and education that will allow for upward mobility within the visitor industry.			X
(7) Foster a recognition of the contribution of the visitor industry to Hawai'i's economy and the need to perpetuate the aloha spirit.			X
(8) Foster an understanding by visitors of the aloha spirit and of the unique and sensitive character of Hawai'i's cultures and values.			X
Discussion: The proposed Project will not impact the State's visitor industry. The Project will involve the provision of teacher workforce housing on an existing school campus.			
HRS § 226-9: Objective and policies for the economy – federal expenditures			
(a) Objective: *Planning for the State's economy with regard to federal expenditures shall be directed towards achievement of the objective of a stable federal investment base as an integral component of Hawai'i's economy.*			
(b) Policies:			
(1) Encourage the sustained flow of federal expenditures in Hawai'i that generates long-term government civilian employment.			X
(2) Promote Hawai'i's supportive role in national defense, in a manner consistent with Hawai'i's social, environmental, and cultural goals by building upon dual-use and defense applications to develop thriving ocean engineering, aerospace research and development, and related dual-use technology sectors in Hawai'i's economy.			X

HAWAI'I STATE PLAN, CHAPTER 226, HRS – PART I. OVERALL THEME, GOALS, OBJECTIVES AND POLICIES (Key: S = Supportive, N/S = Not Supportive, N/A = Not Applicable)	**S**	**N/S**	**N/A**
(3) Promote the development of federally supported activities in Hawai'i that respect state-wide economic concerns, are sensitive to community needs, and minimize adverse impacts on Hawai'i's environment.			X
(4) Increase opportunities for entry and advancement of Hawai'i's people into federal government service.			X
(5) Promote federal use of local commodities, services, and facilities available in Hawai'i.			X
(6) Strengthen federal-state-county communication and coordination in all federal activities that affect Hawai'i.			X
(7) Pursue the return of federally controlled lands in Hawai'i that are not required for either the defense of the nation or for other purposes of national importance, and promote the mutually beneficial exchanges of land between federal agencies, the State, and the counties.			X
Discussion: The proposed Project has no direct relation to the State's goals on federal expenditures.			
HRS § 226-10: Objectives and policies for the economy – potential growth and innovative activities.			
(a) Objective: *Planning for the State's economy with regard to potential growth and innovative activities shall be directed towards achievement of the objective of development and expansion of potential growth and innovative activities that serve to increase and diversify Hawai'i's economic base.*			
(b) Policies:			
(1) Facilitate investment and employment in economic activities that have the potential to expand and diversify Hawai'i's economy, including but not limited to diversified agriculture, aquaculture, renewable energy development, creative media, health care, and science and technology-based sectors.			X
(2) Facilitate investment in innovative activity that may pose risks or be less labor-intensive than other traditional business activity, but if successful, will generate revenue in Hawai'i through the export of services or products or substitution of imported services or products.			X
(3) Encourage entrepreneurship in innovative activity by academic researchers and instructors who may not have the background, skill, or initial inclination to commercially exploit their discoveries or achievements.			X
(4) Recognize that innovative activity is not exclusively dependent upon individuals with advanced formal education, but that many self-taught, motivated individuals are able, willing, sufficiently knowledgeable, and equipped with the attitude necessary to undertake innovative activity.			X
(5) Increase the opportunities for investors in innovative activity and talent engaged in innovative activity to personally meet and interact at cultural, art, entertainment, culinary, athletic, or visitor-oriented events without a business focus.			X

HAWAI'I STATE PLAN, CHAPTER 226, HRS – PART I. OVERALL THEME, GOALS, OBJECTIVES AND POLICIES **(Key: S = Supportive, N/S = Not Supportive, N/A = Not Applicable)**	**S**	**N/S**	**N/A**
(6) Expand Hawai'i's capacity to attract and service international programs and activities that generate employment for Hawai'i's people.			X
(7) Enhance and promote Hawai'i's role as a center for international relations, trade, finance, services, technology, education, culture, and the arts.			X
(8) Accelerate research and development of new energy- related industries based on wind, solar, ocean, and underground resources and solid waste.			X
(9) Promote Hawai'i's geographic, environmental, social, and technological advantages to attract new economic activities into the State.			X
(10) Provide public incentives and encourage private initiative to attract new industries that best support Hawai'i's social, economic, physical, and environmental objectives.			X
(11) Increase research and the development of ocean-related economic activities such as mining, food production, and scientific research.			X
(12) Develop, promote, and support research and educational and training programs that will enhance Hawai'i's ability to attract and develop economic activities of benefit to Hawai'i.			X
(13) Foster a broader public recognition and understanding of the potential benefits of new, or innovative growth-oriented industry in Hawai'i.			X
(14) Encourage the development and implementation of joint federal and state initiatives to attract federal programs and projects that will support Hawai'i's social, economic, physical, and environmental objectives.			X
(15) Increase research and development of businesses and services in the telecommunications and information industries.			X
(16) Foster the research and development of nonfossil fuel and energy efficient modes of transportation.			X
(17) Recognize and promote health care and health care information technology as growth industries.			X
Discussion: The proposed Project has no direct relation to the State's goals on potential growth and innovative activities.			
HRS § 226-10.5: Objectives and policies for the economy – information industry			
(a) Objective: *Planning for the State's economy with regard to telecommunications and information technology shall be directed toward recognizing that broadband and wireless communication capability and infrastructure are foundations for an innovative economy and positioning Hawai'i as a leader in broadband and wireless communications and applications in the Pacific Region.*			
(b) Policies:			
(1) Promote efforts to attain the highest speeds of electronic and wireless communication within Hawai'i and between Hawai'i and the world, and make high speed communication available to all residents and businesses in Hawai'i.			X

HAWAIʻI STATE PLAN, CHAPTER 226, HRS – PART I. OVERALL THEME, GOALS, OBJECTIVES AND POLICIES **(Key: S = Supportive, N/S = Not Supportive, N/A = Not Applicable)**	**S**	**N/S**	**N/A**
(2) Encourage the continued development and expansion of the telecommunications infrastructure serving Hawaiʻi to accommodate future growth and innovation in Hawaiʻi's economy.			X
(3) Facilitate the development of new or innovative business and service ventures in the information industry which will provide employment opportunities for the people of Hawaiʻi.			X
(4) Encourage mainland- and foreign-based companies of all sizes, whether information technology-focused or not, to allow their principals, employees, or contractors to live in and work from Hawaiʻi, using technology to communicate with their headquarters, offices, or customers located out-of-state.			X
(5) Encourage greater cooperation between the public and private sectors in developing and maintaining a well-designed information industry.			X
(6) Ensure that the development of new businesses and services in the industry are in keeping with the social, economic, and physical needs and aspirations of Hawaiʻi's people.			X
(7) Provide opportunities for Hawaiʻi's people to obtain job training and education that will allow for upward mobility within the information industry.			X
(8) Foster a recognition of the contribution of the information industry to Hawaiʻi's economy.			X
(9) Assist in the promotion of Hawaiʻi as a broker, creator, and processor of information in the Pacific.			X
Discussion: The proposed Project has no direct relation to the State's goals on information industry.			
HRS § 226-11: Objectives and policies for the physical environment – land-based, shoreline, and marine resources.			
(a) Objectives: *Planning for the State's physical environment with regard to land-based, shoreline, and marine resources shall be directed towards achievement of the following objectives:*			
(1) Prudent use of Hawaiʻi's land-based, shoreline, and marine resources.	X		
(2) Effective protection of Hawaiʻi's unique and fragile environmental resources.			X
(b) Policies:			
(1) Exercise an overall conservation ethic in the use of Hawaiʻi's natural resources.			X
(2) Ensure compatibility between land-based and water-based activities and natural resources and ecological systems.			X
(3) Take into account the physical attributes of areas when planning and designing activities and facilities.			X
(4) Manage natural resources and environs to encourage their beneficial and multiple use without generating costly or irreparable environmental damage.			X

HAWAI'I STATE PLAN, CHAPTER 226, HRS – PART I. OVERALL THEME, GOALS, OBJECTIVES AND POLICIES (Key: S = Supportive, N/S = Not Supportive, N/A = Not Applicable)	**S**	**N/S**	**N/A**
(5) Consider multiple uses in watershed areas, provided such uses do not detrimentally affect water quality and recharge functions.			X
(6) Encourage the protection of rare or endangered plant and animal species and habitats native to Hawai'i.			X
(7) Provide public incentives that encourage private actions to protect significant natural resources from degradation or unnecessary depletion.			X
(8) Pursue compatible relationships among activities, facilities, and natural resources.			X
(9) Promote increased accessibility and prudent use of inland and shoreline areas for public recreational, educational, and scientific purposes.			X
Discussion: By building on the site of the existing school campus, the proposed Project furthers the State's goal of prudent land-based resources.			
HRS § 226-12: Objective and policies for the physical environment – scenic, natural beauty, and historic resources.			
(a) Objective: *Planning for the State's physical environment shall be directed towards achievement of the objective of enhancement of Hawai'i's scenic assets, natural beauty, and multi-cultural/historical resources.*			
(b) Policies:			
(1) Promote the preservation and restoration of significant natural and historic resources.			X
(2) Provide incentives to maintain and enhance historic, cultural, and scenic amenities.			X
(3) Promote the preservation of views and vistas to enhance the visual and aesthetic enjoyment of mountains, ocean, scenic landscapes, and other natural features.			X
(4) Protect those special areas, structures, and elements that are an integral and functional part of Hawai'i's ethnic and cultural heritage.			X
(5) Encourage the design of developments and activities that complement the natural beauty of the islands.			X
Discussion: The proposed Project has no relationship to the promotion and/or availability of scenic and historic resources in the State of Hawai'i, as it will provide teacher workforce housing on an existing school campus.			
HRS § 226-13: Objectives and policies for the physical environment – land, air, and water quality.			
(a) Objectives: *Planning for the State's physical environment with regard to land, air, and water quality shall be directed towards achievement of the following objectives:*			
(1) Maintenance and pursuit of improved quality in Hawai'i's land, air, and water resources.			X

HAWAIʻI STATE PLAN, CHAPTER 226, HRS – PART I. OVERALL THEME, GOALS, OBJECTIVES AND POLICIES (Key: S = Supportive, N/S = Not Supportive, N/A = Not Applicable)	**S**	**N/S**	**N/A**
(2) Greater public awareness and appreciation of Hawaiʻi's environmental resources.			X
(b) Policies:			
(1) Foster educational activities that promote a better understanding of Hawaiʻi's limited environmental resources.			X
(2) Promote the proper management of Hawaiʻi's land and water resources.	X		
(3) Promote effective measures to achieve desired quality in Hawaiʻi's surface, ground, and coastal waters.			X
(4) Encourage actions to maintain or improve aural and air quality levels to enhance the health and well-being of Hawaiʻi's people.			X
(5) Reduce the threat to life and property from erosion, flooding, tsunamis, hurricanes, earthquakes, volcanic eruptions, and other natural or man-induced hazards and disasters.			X
(6) Encourage design and construction practices that enhance the physical qualities of Hawaiʻi's communities.			X
(7) Encourage urban developments in close proximity to existing services and facilities.	X		
(8) Foster recognition of the importance and value of the land, air, and water resources to Hawaiʻi's people, their cultures and visitors.			X
Discussion: Siting the proposed teacher workforce housing on an existing school campus is supportive of the State's goal of encouraging development in proximity to existing services and facilities, while reducing impacts to land and water resources.			
HRS § 226-14: Objective and policies for facility systems – in general.			
(a) Objective: *Planning for the State's facility systems in general shall be directed towards achievement of the objective of water, transportation, waste disposal, and energy and telecommunication systems that support statewide social, economic, and physical objectives.*			
(b) Policies:			
(1) Accommodate the needs of Hawaiʻi's people through coordination of facility systems and capital improvement priorities in consonance with state and county plans.			X
(2) Encourage flexibility in the design and development of facility systems to promote prudent use of resources and accommodate changing public demands and priorities.			X
(3) Ensure that required facility systems can be supported within resource capacities and at reasonable cost to the user.			X
(4) Pursue alternative methods of financing programs and projects and cost-saving techniques in the planning, construction, and maintenance of facility systems.			X

HAWAI'I STATE PLAN, CHAPTER 226, HRS – PART I. OVERALL THEME, GOALS, OBJECTIVES AND POLICIES **(Key: S = Supportive, N/S = Not Supportive, N/A = Not Applicable)**	**S**	**N/S**	**N/A**
Discussion: The proposed Project has no direct relation to the State's objective and policies for facility systems (water, transportation, waste disposal, and energy and telecommunication systems).			
HRS § 226-15: Objectives and policies for facility systems – solid and liquid wastes.			
(a) Objectives: *Planning for the State's facility systems with regard to solid and liquid wastes shall be directed towards the achievement of the following objectives:*			
(1) Maintenance of basic public health and sanitation standards relating to treatment and disposal of solid and liquid wastes.			X
(2) Provision of adequate sewerage facilities for physical and economic activities that alleviate problems in housing, employment, mobility, and other areas.			X
(b) Policies:			
(1) Encourage the adequate development of sewerage facilities that complement planned growth.			X
(2) Promote re-use and recycling to reduce solid and liquid wastes and employ a conservation ethic.			X
(3) Promote research to develop more efficient and economical treatment and disposal of solid and liquid wastes.			X
Discussion: The proposed Project has no direct relation to the State's objective and policies for solid and liquid wastes facility systems.			
HRS § 226-16: Objective and policies for facility systems – water.			
(a) Objective: *Planning for the State's facility systems with regard to water shall be directed towards achievement of the objective of the provision of water to adequately accommodate domestic, agricultural, commercial, industrial, recreational, and other needs within resource capacities.*			
(b) Policies:			
(1) Coordinate development of land use activities with existing and potential water supply.	X		
(2) Support research and development of alternative methods to meet future water requirements well in advance of anticipated needs.			X
(3) Reclaim and encourage the productive use of runoff water and wastewater discharges.			X
(4) Assist in improving the quality, efficiency, service, and storage capabilities of water systems for domestic and agricultural use.			X
(5) Support water supply services to areas experiencing critical water problems.			X
(6) Promote water conservation programs and practices in government, private industry, and the general public to help ensure adequate water to meet long-term needs.			X

HAWAI'I STATE PLAN, CHAPTER 226, HRS – PART I. OVERALL THEME, GOALS, OBJECTIVES AND POLICIES **(Key: S = Supportive, N/S = Not Supportive, N/A = Not Applicable)**	**S**	**N/S**	**N/A**
Discussion: The existing MHS campus is connected to BWS facilities. Similarly, the proposed teacher workforce housing will secure connection to BWS facilities.			
HRS § 226-17: Objectives and policies for facility systems – transportation.			
(a) Objective: *Planning for the State's facility systems with regard to transportation shall be directed toward the achievement of the following objectives:*			
(1) An integrated multi-modal transportation system that services statewide needs and promotes the efficient, economical, safe, and convenient movement of people and goods.			X
(2) A statewide transportation system that is consistent with and will accommodate planned growth objectives throughout the State.			X
(b) Policies:			
(1) Design, program, and develop a multi-modal system in conformance with desired growth and physical development as stated in this chapter;			X
(2) Coordinate state, county, federal, and private transportation activities and programs toward the achievement of statewide objectives;			X
(3) Encourage a reasonable distribution of financial responsibilities for transportation among participating governmental and private parties;			X
(4) Provide for improved accessibility to shipping, docking, and storage facilities;			X
(5) Promote a reasonable level and variety of mass transportation services that adequately meet statewide and community needs;			X
(6) Encourage transportation systems that serve to accommodate present and future development needs of communities;			X
(7) Encourage a variety of carriers to offer increased opportunities and advantages to interisland movement of people and goods;			X
(8) Increase the capacities of airport and harbor systems and support facilities to effectively accommodate transshipment and storage needs;			X
(9) Encourage the development of transportation systems and programs which would assist statewide economic growth and diversification;			X
(10) Encourage the design and development of transportation systems sensitive to the needs of affected communities and the quality of Hawai'i's natural environment;			X
(11) Encourage safe and convenient use of low-cost, energy-efficient, non-polluting means of transportation;			X
(12) Coordinate intergovernmental land use and transportation planning activities to ensure the timely delivery of supporting transportation infrastructure in order to accommodate planned growth objectives; and			X
(13) Encourage diversification of transportation modes and infrastructure to promote alternate fuels and energy efficiency.			X

HAWAI'I STATE PLAN, CHAPTER 226, HRS – PART I. OVERALL THEME, GOALS, OBJECTIVES AND POLICIES (Key: S = Supportive, N/S = Not Supportive, N/A = Not Applicable)	**S**	**N/S**	**N/A**
Discussion: The proposed Project has no direct relation to the State's objective and policies for transportation facility systems.			
HRS § 226-18: Objectives and policies for facility systems – energy.			
(a) Objectives: *Planning for the State's facility systems with regard to energy shall be directed toward the achievement of the following objectives, giving due consideration to all:*			
(1) Dependable, efficient, and economical statewide energy systems capable of supporting the needs of the people;			X
(2) Increased energy security and self-sufficiency through the reduction and ultimate elimination of Hawai'i's dependence on imported fuels for electrical generation and ground transportation;			X
(3) Greater diversification of energy generation in the face of threats to Hawai'i's energy supplies and systems;			X
(4) Reduction, avoidance, or sequestration of greenhouse gas emissions from energy supply and use; and			X
(5) Utility models that make the social and financial interests of Hawai'i's utility customers a priority.			X
(b) *To achieve the energy objectives, it shall be the policy of this State to ensure the short- and long-term provision of adequate, reasonably priced, and dependable energy services to accommodate demand.*			
(c) Other Policies:			
(1) Support research and development as well as promote the use of renewable energy sources;			X
(2) Ensure that the combination of energy supplies and energy-saving systems is sufficient to support the demands of growth;			X
(3) Base decisions of least-cost supply-side and demand-side energy resource options on a comparison of their total costs and benefits when a least-cost is determined by a reasonably comprehensive, quantitative, and qualitative accounting of their long-term, direct and indirect economic, environmental, social, cultural, and public health costs and benefits;			X
(4) Promote all cost-effective conservation of power and fuel supplies through measures including:			
(A) Development of cost-effective demand-side management programs;			X
(B) Education;			X
(C) Adoption of energy-efficient practices and technologies; and			X
(D) Increasing energy efficiency and decreasing energy use in public infrastructure;			X
(5) Ensure, to the extent that new supply-side resources are needed, that the development or expansion of energy systems uses the least-cost energy supply option and maximizes efficient technologies;			X

HAWAIʻI STATE PLAN, CHAPTER 226, HRS – PART I. OVERALL THEME, GOALS, OBJECTIVES AND POLICIES (Key: S = Supportive, N/S = Not Supportive, N/A = Not Applicable)	**S**	**N/S**	**N/A**
(6) Support research, development, demonstration, and use of energy efficiency, load management, and other demand-side management programs, practices, and technologies;			X
(7) Promote alternate fuels and transportation energy efficiency;			X
(8) Support actions that reduce, avoid, or sequester greenhouse gases in utility, transportation, and industrial sector applications;			X
(9) Support actions that reduce, avoid, or sequester Hawaiʻi's greenhouse gas emissions through agriculture and forestry initiatives.			X
(10) Provide priority handling and processing for all state and county permits required for renewable energy projects;			X
(11) Ensure that liquefied natural gas is used only as a cost-effective transitional, limited-term replacement of petroleum for electricity generation and does not impede the development and use of other cost-effective renewable energy sources; and			X
(12) Promote the development of indigenous geothermal energy resources that are located on public trust land as an affordable and reliable source of firm power for Hawaiʻi.			X
Discussion: The proposed Project has no direct relation to the State's objective and policies for energy facility systems.			
HRS § 226-18.5: Objectives and policies for facility systems – telecommunications.			
(a) Objective: *Planning for the State's telecommunications facility systems shall be directed towards the achievement of dependable, efficient, and economical statewide telecommunications systems capable of supporting the needs of the people.*			
(b) To achieve the telecommunications objective, it shall be the policy of this State to ensure the provision of adequate, reasonably priced, and dependable telecommunications services to accommodate demand.			
(c) Other Policies:			
(1) Facilitate research and development of telecommunications systems and resources;			X
(2) Encourage public and private sector efforts to develop means for adequate, ongoing telecommunications planning;			X
(3) Promote efficient management and use of existing telecommunications systems and services; and			X
(4) Facilitate the development of education and training of telecommunications personnel.			X
Discussion: The proposed Project has no direct relation to the State's objective and policies for telecommunications facility systems.			

HAWAI'I STATE PLAN, CHAPTER 226, HRS – PART I. OVERALL THEME, GOALS, OBJECTIVES AND POLICIES **(Key: S = Supportive, N/S = Not Supportive, N/A = Not Applicable)**	**S**	**N/S**	**N/A**
HRS § 226-19: Objectives and policies for socio-cultural advancement – housing.			
(a) Objectives: *Planning for the State's socio-cultural advancement with regard to housing shall be directed toward the achievement of the following objectives:*			
(1) Greater opportunities for Hawai'i's people to secure reasonably priced, safe, sanitary, and livable homes, located in suitable environments that satisfactorily accommodate the needs and desires of families and individuals, through collaboration and cooperation between government and nonprofit and for-profit developers to ensure that more affordable housing is made available to very low-, low- and moderate-income segments of Hawai'i's population.	X		
(2) The orderly development of residential areas sensitive to community needs and other land uses.	X		
(3) The development and provision of affordable rental housing by the State to meet the housing needs of Hawai'i's people.	X		
(b) Policies:			
(1) Effectively accommodate the housing needs of Hawai'i's people.	X		
(2) Stimulate and promote feasible approaches that increase housing choices for low-income, moderate-income, and gap-group households.	X		
(3) Increase homeownership and rental opportunities and choices in terms of quality, location, cost, densities, style, and size of housing.	X		
(4) Promote appropriate improvement, rehabilitation, and maintenance of existing housing units and residential areas.			X
(5) Promote design and location of housing developments taking into account the physical setting, accessibility to public facilities and services, and other concerns of existing communities and surrounding areas.	X		
(6) Facilitate the use of available vacant, developable, and underutilized urban lands for housing.	X		
(7) Foster a variety of lifestyles traditional to Hawai'i through the design and maintenance of neighborhoods that reflect the culture and values of the community.			X
(8) Promote research and development of methods to reduce the cost of housing construction in Hawai'i.			X
Discussion: The proposed Project supports the State's objectives and policies for socio-cultural advancement related to housing by providing reasonably priced, safe, sanitary, and livable teacher workforce housing, conveniently located in a desirable residential community in close proximity to retail and recreational amenities, as well as other public facilities and services. By locating the Project on the site of an existing high school parking lot, the proposed Project facilitates the use of available developable and underutilized urban lands for housing, while taking into account the physical setting and accessibility to public facilities and services.			

HAWAI'I STATE PLAN, CHAPTER 226, HRS – PART I. OVERALL THEME, GOALS, OBJECTIVES AND POLICIES **(Key: S = Supportive, N/S = Not Supportive, N/A = Not Applicable)**	**S**	**N/S**	**N/A**
HRS § 226-20: Objectives and policies for socio-cultural advancement – health			
(a) Objectives: *Planning for the State's socio-cultural advancement with regard to health shall be directed towards achievement of the following objectives:*			
(1) Fulfillment of basic individual health needs of the general public.			X
(2) Maintenance of sanitary and environmentally healthful conditions in Hawai'i's communities.			X
(3) Elimination of health disparities by identifying and addressing social determinants of health.			X
(b) Policies:			
(1) Provide adequate and accessible services and facilities for prevention and treatment of physical and mental health problems, including substance abuse.			X
(2) Encourage improved cooperation among public and private sectors in the provision of health care to accommodate the total health needs of individuals throughout the State.			X
(3) Encourage public and private efforts to develop and promote statewide and local strategies to reduce health care and related insurance costs.			X
(4) Foster an awareness of the need for personal health maintenance and preventive health care through education and other measures.			X
(5) Provide programs, services, and activities that ensure environmentally healthful and sanitary conditions.			X
(6) Improve the State's capabilities in preventing contamination by pesticides and other potentially hazardous substances through increased coordination, education, monitoring, and enforcement.			X
(7) Prioritize programs, services, interventions, and activities that address identified social determinants of health to improve native Hawaiian health and well-being consistent with the United States Congress' declaration of policy as codified in title 42 United States Code section 11702, and to reduce health disparities of disproportionately affected demographics, including native Hawaiians, other Pacific Islanders, and Filipinos. The prioritization of affected demographic groups other than native Hawaiians may be reviewed every ten years and revised based on the best available epidemiological and public health data.			X
Discussion: The proposed Project has no direct relation to the State's objective and policies for socio-cultural advancement – health.			
HRS § 226-21: Objective and policies for socio-cultural advancement – education.			
(a) Objectives: *Planning for the State's socio-cultural advancement with regard to education shall be directed towards achievement of the objective of the provision of a variety of educational opportunities to enable individuals to fulfill their needs, responsibilities, and aspirations.*			

HAWAIʻI STATE PLAN, CHAPTER 226, HRS – PART I. OVERALL THEME, GOALS, OBJECTIVES AND POLICIES **(Key: S = Supportive, N/S = Not Supportive, N/A = Not Applicable)**	**S**	**N/S**	**N/A**
(b) Policies:			
(1) Support educational programs and activities that enhance personal development, physical fitness, recreation, and cultural pursuits of all groups.			X
(2) Ensure the provision of adequate and accessible educational services and facilities that are designed to meet individual and community needs.			X
(3) Provide appropriate educational opportunities for groups with special needs.			X
(4) Promote educational programs which enhance understanding of Hawaiʻi's cultural heritage.			X
(5) Provide higher educational opportunities that enable Hawaiʻi's people to adapt to changing employment demands.			X
(6) Assist individuals, especially those experiencing critical employment problems or barriers, or undergoing employment transitions, by providing appropriate employment training programs and other related educational opportunities.			X
(7) Promote programs and activities that facilitate the acquisition of basic skills, such as reading, writing, computing, listening, speaking, and reasoning.			X
(8) Emphasize quality educational programs in Hawaiʻi's institutions to promote academic excellence.			X
(9) Support research programs and activities that enhance the education programs of the State.			X
Discussion: While the proposed Project has no direct relation to the State's objective and policies for socio-cultural advancement – education, the proposed Project will directly support educators by providing reasonably priced, safe, sanitary, and livable teacher workforce housing that is conveniently located near services and amenities. By meeting the housing needs of Hawaiʻi's educators, the proposed Project will enable teachers to better support students in fulfilling their needs, responsibilities, and aspirations.			
HRS § 226-22: Objective and policies for socio-cultural advancement – social services.			
(a) Objective: *Planning for the State's socio-cultural advancement with regard to social services shall be directed towards the achievement of the objective of improved public and private social services and activities that enable individuals, families, and groups to become more self-reliant and confident to improve their well-being.*			
(b) Policies:			
(1) Assist individuals, especially those in need of attaining a minimally adequate standard of living and those confronted by social and economic hardship conditions, through social services and activities within the State's fiscal capacities.			X

HAWAI'I STATE PLAN, CHAPTER 226, HRS – PART I. OVERALL THEME, GOALS, OBJECTIVES AND POLICIES (Key: S = Supportive, N/S = Not Supportive, N/A = Not Applicable)	**S**	**N/S**	**N/A**
(2) Promote coordination and integrative approaches among public and private agencies and programs to jointly address social problems that will enable individuals, families, and groups to deal effectively with social problems and to enhance their participation in society.			X
(3) Facilitate the adjustment of new residents, especially recently arrived immigrants, into Hawai'i's communities.			X
(4) Promote alternatives to institutional care in the provision of long-term care for elder and disabled populations.			X
(5) Support public and private efforts to prevent domestic abuse and child molestation, and assist victims of abuse and neglect.			X
(6) Promote programs which assist people in need of family planning services to enable them to meet their needs.			X
Discussion: The proposed Project has no direct relation to the State's objective and policies for socio-cultural advancement – social services.			
HRS § 226-23: Objective and policies for socio-cultural advancement – leisure.			
(a) Objective: *Planning for the State's socio-cultural advancement with regard to leisure shall be directed towards the achievement of the objective of the adequate provision of resources to accommodate diverse cultural, artistic, and recreational needs for present and future generations.*			
(b) Policies:			
(1) Foster and preserve Hawai'i's multi-cultural heritage through supportive cultural, artistic, recreational, and humanities-oriented programs and activities.			X
(2) Provide a wide range of activities and facilities to fulfill the cultural, artistic, and recreational needs of all diverse and special groups effectively and efficiently.			X
(3) Enhance the enjoyment of recreational experiences through safety and security measures, educational opportunities, and improved facility design and maintenance.			X
(4) Promote the recreational and educational potential of natural resources having scenic, open space, cultural, historical, geological, or biological values while ensuring that their inherent values are preserved.			X
(5) Ensure opportunities for everyone to use and enjoy Hawai'i's recreational resources.			X
(6) Assure the availability of sufficient resources to provide for future cultural, artistic, and recreational needs.			X
(7) Provide adequate and accessible physical fitness programs to promote the physical and mental well-being of Hawai'i's people.			X

HAWAI'I STATE PLAN, CHAPTER 226, HRS – PART I. OVERALL THEME, GOALS, OBJECTIVES AND POLICIES (Key: S = Supportive, N/S = Not Supportive, N/A = Not Applicable)	**S**	**N/S**	**N/A**
(8) Increase opportunities for appreciation and participation in the creative arts, including the literary, theatrical, visual, musical, folk, and traditional art forms.			X
(9) Encourage the development of creative expression in the artistic disciplines to enable all segments of Hawai'i's population to participate in the creative arts.			X
(10) Assure adequate access to significant natural and cultural resources in public ownership.			X
Discussion: The proposed Project has no direct relation to the State's objective and policies for socio-cultural advancement – leisure.			
HRS § 226-24: Objective and policies for socio-cultural advancement – individual rights and personal well-being.			
(a) Objective: *Planning for the State's socio-cultural advancement with regard to individual rights and personal well-being shall be directed towards achievement of the objective of increased opportunities and protection of individual rights to enable individuals to fulfill their socio-economic needs and aspirations.*			
(b) Policies:			
(1) Provide effective services and activities that protect individuals from criminal acts and unfair practices and that alleviate the consequences of criminal acts in order to foster a safe and secure environment.			X
(2) Uphold and protect the national and state constitutional rights of every individual.			X
(3) Assure access to, and availability of, legal assistance, consumer protection, and other public services which strive to attain social justice.			X
(4) Ensure equal opportunities for individual participation in society.			X
Discussion: The proposed Project has no direct relation to the State's objective and policies for socio-cultural advancement – individual rights and personal well-being.			
HRS § 226-25: Objective and policies for socio-cultural advancement – culture.			
(a) Objective: *Planning for the State's socio-cultural advancement with regard to culture shall be directed toward the achievement of the objective of enhancement of cultural identities, traditions, values, customs, and arts of Hawai'i's people.*			
(b) Policies:			
(1) Foster increased knowledge and understanding of Hawai'i's ethnic and cultural heritages and the history of Hawai'i.			X
(2) Support activities and conditions that promote cultural values, customs, and arts that enrich the lifestyles of Hawai'i's people and which are sensitive and responsive to family and community needs.			X

HAWAI'I STATE PLAN, CHAPTER 226, HRS – PART I. OVERALL THEME, GOALS, OBJECTIVES AND POLICIES (Key: S = Supportive, N/S = Not Supportive, N/A = Not Applicable)	**S**	**N/S**	**N/A**
(3) Encourage increased awareness of the effects of proposed public and private actions on the integrity and quality of cultural and community lifestyles in Hawai'i.			X
(4) Encourage the essence of the aloha spirit in people's daily activities to promote harmonious relationships among Hawai'i's people and visitors.			X
Discussion: The proposed Project has no direct relation to the State's objective and policies for socio-cultural advancement – culture.			
HRS § 226-26: Objectives and policies for socio-cultural advancement – public safety.			
Objectives: *Planning for the State's socio-cultural advancement with regard to public safety shall be directed towards the achievement of the following objectives:*			
(1) Assurance of public safety and adequate protection of life and property for all people.			X
(2) Optimum organizational readiness and capability in all phases of emergency management to maintain the strength, resources, and social and economic well-being of the community in the event of civil disruptions, wars, natural disasters, and other major disturbances.			X
(3) Promotion of a sense of community responsibility for the welfare and safety of Hawai'i's people.			X
(b) Policies related to public safety:			
(1) Ensure that public safety programs are effective and responsive to community needs.			X
(2) Encourage increased community awareness and participation in public safety programs.			X
(c) Policies related to criminal justice:			
(1) Support criminal justice programs aimed at preventing and curtailing criminal activities.			X
(2) Develop a coordinated, systematic approach to criminal justice administration among all criminal justice agencies.			X
(3) Provide a range of correctional resources which may include facilities and alternatives to traditional incarceration in order to address the varied security needs of the community and successfully reintegrate offenders into the community.			X
(d) Policies related to emergency management:			
(1) Ensure that responsible organizations are in a proper state of readiness to respond to major war-related, natural, or technological disasters and civil disturbances at all times.			X
(2) Enhance the coordination between emergency management programs throughout the State.			X
Discussion: The proposed Project has no direct relation to the State's objective and policies for socio-cultural advancement – public safety.			

HAWAI'I STATE PLAN, CHAPTER 226, HRS – PART I. OVERALL THEME, GOALS, OBJECTIVES AND POLICIES (Key: S = Supportive, N/S = Not Supportive, N/A = Not Applicable)	S	N/S	N/A
HRS § 226-27: Objectives and policies for socio-cultural advancement – government.			
(a) Objectives: *Planning the State's socio-cultural advancement with regard to government shall be directed towards the achievement of the following objectives:*			
(1) Efficient, effective, and responsive government services at all levels in the State.			X
(2) Fiscal integrity, responsibility, and efficiency in the state government and county governments.			X
(b) Policies:			
(1) Provide for necessary public goods and services not assumed by the private sector.			X
(2) Pursue an openness and responsiveness in government that permits the flow of public information, interaction, and response.			X
(3) Minimize the size of government to that necessary to be effective.			X
(4) Stimulate the responsibility in citizens to productively participate in government for a better Hawai'i.			X
(5) Assure that government attitudes, actions, and services are sensitive to community needs and concerns.			X
(6) Provide for a balanced fiscal budget.			X
(7) Improve the fiscal budgeting and management system of the State.			X
(8) Promote the consolidation of state and county governmental functions to increase the effective and efficient delivery of government programs and services and to eliminate duplicative services wherever feasible.			X
Discussion: The proposed Project has no direct relation to the State's objective and policies for socio-cultural advancement – government.			

5.1.4.2 Hawai'i State Plan, Part II: Planning Coordination and Implementation

Part II of the State Plan establishes a statewide planning system to coordinate and guide all major state and county activities and to implement the overall theme, goals, objectives, policies, and priority guidelines. The system implements the State Plan through the development of functional plans and county general plans. Functional plans, general plans, and the formulation, administration, and implementation of state programs must be in conformance with the State Plan.

- **State Functional Plans**

State Functional Plans (SFPs) set forth the policies, statewide guidelines, and priorities within a specific field of activity, when such activity or program is proposed, administered, or funded by any agency of the state. Functional plans are developed by the state agency primarily responsible for a given functional area, which include: Agriculture, Conservation Lands, Education, Employment, Energy, Health, Higher Education, Historic Preservation, Housing, Human Services,

Recreation, Tourism, and Transportation. Functional plans must identify priority issues in the functional area and contain objectives, policies, and implementing actions to address those priority issues. Actions may include organizational or management initiatives, facility or physical infrastructure development initiatives, initiatives for programs and services, or legislative proposals. Functional plans are approved by the governor and serve as guidelines for funding and implementation by state and county agencies. In addition, functional plans shall be used to guide the allocation of resources for the implementation of state policies adopted by the legislature.

- **State Education Functional Plan (SEFP)**

One of the applicable functional plans is the *State Education Functional Plan* (SEFP 1989). Specific SEFP policies and goals applicable to the proposed Project are discussed below.

A(3): Education Workforce

- *Policy: Initiate efforts to improve the quality of education by improving the capabilities of the education workforce.*
- *Goal: Recruit, train, motivate and retain a competent staff at all levels of the organization.*

Discussion: The proposed teacher workforce housing Project supports the above policy and goal, as increasing the supply of affordable and workforce housing available for teachers is a well-established mechanism to support teacher retention and recruitment efforts.

- **State Housing Functional Plan (SHFP)**

Another applicable functional plan is the *State Housing Functional Plan* (SHFP 2017). Specific SHFP policies and goals applicable to the proposed Project are discussed below.

OBJECTIVE A: INCREASE AND SUSTAIN THE SUPPLY OF PERMANENT RENTAL HOUSING THAT IS AFFORDABLE AND ACCESSIBLE TO HAWAII RESIDENTS, PARTICULARLY THOSE WITH INCOMES AT OR BELOW 80% AMI.

ATTAIN THE LEGISLATIVE GOAL OF 22,500 RENTAL HOUSING UNITS BY 2026.

STRATEGY: Expand and preserve the supply of affordable rental housing units through joint public/private efforts. Expand and mobilize resources to better assist households seeking rental housing opportunities, including lower income households, the elderly, persons with disabilities, and homeless households. And, pursue sources of funding for rent subsidies…

POLICY A (2): Encourage increased participation from private developers and other state entities to develop rental housing.

IMPLEMENTING ACTION A(2)(a): Form public/private partnerships and/or enter into public/private development agreements to develop rental housing.

IMPLEMENTING ACTION A(2)(b): Form partnerships and/or enter into agreements with state agencies to develop mixed-use developments which include rental housing…

Discussion: The proposed teacher workforce housing supports Objective A, as it involves public/private efforts to develop up to 95 affordable units towards the goal for 22,500 rental housing units.

OBJECTIVE C: ADDRESS BARRIERS TO RESIDENTIAL DEVELOPMENT.

STRATEGY: Coordinate and facilitate the production of housing by addressing development impediments including lack of land, infrastructure, and regulations that add to the cost of housing.

POLICY C (1): Utilize state and county land for mixed-use and mixed-income housing development with focus on rental housing…

POLICY C (3): Address regulatory barriers including the lengthy land use entitlement process, lack of consistency and coordination in state and county agency reviews, impact fees and exactions, fiscal policy, and administrative processes that add to the cost of housing.

IMPLEMENTING ACTION C(3)(a): Reduce redundancies in the land use entitlement process.

IMPLEMENTING ACTION C(3)(b): Promote predictability and reliance in land use matters by supporting existing residential zoning and approved housing projects. If such projects are meeting the conditions of their approvals and are proceeding in good faith and in a timely manner, then these properties whether through zoning, development agreement, subdivision approval or otherwise should be defended from any subsequent down zoning actions or other actions that would delay their development…

Discussion: The proposed teacher workforce housing addresses the above objective and the lack of land, as the proposed Project rental housing on State-owned land. Additionally, the proposed Project will address lengthy land use entitlement process, impact fees and exactions that add to the cost of housing, by pursuing the HRS 201H process.

- **County General Plan**

As established in Part II of the State Plan, a statewide planning system implements the State Plan through the development of SFPs and county general plans. The applicable county general plan is the CCH General Plan, which is discussed in Section 5.2.1 of this EA below.

5.1.4.3 Hawai'i State Plan, Part III: *Priority Guidelines*

Table 12: Hawai'i State Plan, Chapter 226, HRS – Part III

HAWAI'I STATE PLAN, CHAPTER 226, HRS – PART III. PRIORITY GUIDELINES **(Key: S = Supportive, N/S = Not Supportive, N/A = Not Applicable)**	**S**	**N/S**	**N/A**
HRS § 226-101: Purpose. *The purpose of this part is to establish overall priority guidelines to address areas of statewide concern.*			
HRS § 226-102: Overall direction. *The State shall strive to improve the quality of life for Hawai'i's present and future present and future population through the pursuit of desirable courses of action in five major areas of statewide concern which merit priority attention: economic development, population growth and land resource management, affordable housing, crime and criminal justice, quality education, principles of sustainability, and climate change adaptation.*			

HAWAIʻI STATE PLAN, CHAPTER 226, HRS – PART III. PRIORITY GUIDELINES **(Key: S = Supportive, N/S = Not Supportive, N/A = Not Applicable)**	**S**	**N/S**	**N/A**
HRS § 226-103: Economic priority guidelines.			
(a) Priority guidelines to stimulate economic growth and encourage business expansion and development to provide needed jobs for Hawaiʻi's people and achieve a stable and diversified economy:			
(1) Seek a variety of means to increase the availability of investment capital for new and expanding enterprises.			X
(A) Encourage investments which:			
(i) Reflect long term commitments to the State;			X
(ii) Rely on economic linkages within the local economy;			X
(iii) Diversify the economy;			X
(iv) Reinvest in the local economy;			X
(v) Are sensitive to community needs and priorities; and			X
(vi) Demonstrate a commitment to provide management opportunities to Hawaiʻi residents; and			X
(B) Encourage investments in innovative activities that have a nexus to the State, such as:			
(i) Present or former residents acting as entrepreneurs or principals;			X
(ii) Academic support from an institution of higher education in Hawaiʻi;			X
(iii) Investment interest from Hawaiʻi residents;			X
(iv) Resources unique to Hawaiʻi that are required for innovative activity; and			X
(v) Complementary or supportive industries or government programs or projects.			X
(2) Encourage the expansion of technological research to assist industry development and support the development and commercialization of technological advancements.			X
(3) Improve the quality, accessibility, and range of services provided by government to business, including data and reference services and assistance in complying with governmental regulations.			X
(4) Seek to ensure that state business tax and labor laws and administrative policies are equitable, rational, and predictable.			X
(5) Streamline the processes for building and development permit and review and telecommunication infrastructure installation approval and eliminate or consolidate other burdensome or duplicative governmental requirements imposed on business, where scientific evidence indicates that public health, safety, and welfare would not be adversely affected.			X
(6) Encourage the formation of cooperatives and other favorable marketing or distribution arrangements at the regional or local level to assist Hawaiʻi's small-scale producers, manufacturers, and distributors.			X

HAWAIʻI STATE PLAN, CHAPTER 226, HRS – PART III. PRIORITY GUIDELINES (Key: S = Supportive, N/S = Not Supportive, N/A = Not Applicable)	S	N/S	N/A
(7) Continue to seek legislation to protect Hawaiʻi from transportation interruptions between Hawaiʻi and the continental United States.			X
(8) Provide public incentives and encourage private initiative to develop and attract industries which promise long-term growth potentials and which have the following characteristics:			
(A) An industry that can take advantage of Hawaiʻi's unique location and available physical and human resources.			X
(B) A clean industry that would have minimal adverse effects on Hawaiʻi's environment.			X
(C) An industry that is willing to hire and train Hawaiʻi's people to meet the industry's labor needs at all levels of employment.			X
(D) An industry that would provide reasonable income and steady employment.			X
(9) Support and encourage, through educational and technical assistance programs and other means, expanded opportunities for employee ownership and participation in Hawaiʻi business.			X
(10) Enhance the quality of Hawaiʻi's labor force and develop and maintain career opportunities for Hawaiʻi's people through the following actions:			
(A) Expand vocational training in diversified agriculture, aquaculture, information industry, and other areas where growth is desired and feasible.			X
(B) Encourage more effective career counseling and guidance in high schools and post-secondary institutions to inform students of present and future career opportunities.			X
(C) Allocate educational resources to career areas where high employment is expected and where growth of new industries is desired.			X
(D) Promote career opportunities in all industries for Hawaiʻi's people by encouraging firms doing business in the State to hire residents.			X
(E) Promote greater public and private sector cooperation in determining industrial training needs and in developing relevant curricula and on-the-job training opportunities.			X
(F) Provide retraining programs and other support services to assist entry of displaced workers into alternative employment.			X
(b) Priority guidelines to promote the economic health and quality of the visitor industry:			
(1) Promote visitor satisfaction by fostering an environment which enhances the Aloha Spirit and minimizes inconveniences to Hawaiʻi's residents and visitors.			X
(2) Encourage the development and maintenance of well-designed, adequately serviced hotels and resort destination areas which are sensitive to neighboring communities and activities and which provide for adequate shoreline setbacks and beach access.			X

HAWAI'I STATE PLAN, CHAPTER 226, HRS – PART III. PRIORITY GUIDELINES (Key: S = Supportive, N/S = Not Supportive, N/A = Not Applicable)	S	N/S	N/A
(3) Support appropriate capital improvements to enhance the quality of existing resort destination areas and provide incentives to encourage investment in upgrading, repair, and maintenance of visitor facilities.			X
(4) Encourage visitor industry practices and activities which respect, preserve, and enhance Hawai'i's significant natural, scenic, historic, and cultural resources.			X
(5) Develop and maintain career opportunities in the visitor industry for Hawai'i's people, with emphasis on managerial positions.			X
(6) Support and coordinate tourism promotion abroad to enhance Hawai'i's share of existing and potential visitor markets.			X
(7) Maintain and encourage a more favorable resort investment climate consistent with the objectives of this chapter.			X
(8) Support law enforcement activities that provide a safer environment for both visitors and residents alike.			X
(9) Coordinate visitor industry activities and promotions to business visitors through the state network of advanced data communication techniques.			X
(c) Priority guidelines to promote the continued viability of the sugar and pineapple industries:			
(1) Provide adequate agricultural lands to support the economic viability of the sugar and pineapple industries.			X
(2) Continue efforts to maintain federal support to provide stable sugar prices high enough to allow profitable operations in Hawai'i.			X
(3) Support research and development, as appropriate, to improve the quality and production of sugar and pineapple crops.			X
(d) Priority guidelines to promote the growth and development of diversified agriculture and aquaculture:			
(1) Identify, conserve, and protect agricultural and aquacultural lands of importance and initiate affirmative and comprehensive programs to promote economically productive agricultural and aquacultural uses of such lands.			X
(2) Assist in providing adequate, reasonably priced water for agricultural activities.			X
(3) Encourage public and private investment to increase water supply and to improve transmission, storage, and irrigation facilities in support of diversified agriculture and aquaculture.			X
(4) Assist in the formation and operation of production and marketing associations and cooperatives to reduce production and marketing costs.			X
(5) Encourage and assist with the development of a waterborne and airborne freight and cargo system capable of meeting the needs of Hawai'i's agricultural community.			X

HAWAI'I STATE PLAN, CHAPTER 226, HRS – PART III. PRIORITY GUIDELINES (Key: S = Supportive, N/S = Not Supportive, N/A = Not Applicable)	S	N/S	N/A
(6) Seek favorable freight rates for Hawai'i's agricultural products from interisland and overseas transportation operators.			X
(7) Encourage the development and expansion of agricultural and aquacultural activities which offer long-term economic growth potential and employment opportunities.			X
(8) Continue the development of agricultural parks and other programs to assist small independent farmers in securing agricultural lands and loans.			X
(9) Require agricultural uses in agricultural subdivisions and closely monitor the uses in these subdivisions.			X
(10) Support the continuation of land currently in use for diversified agriculture.			X
(11) Encourage residents and visitors to support Hawai'i's farmers by purchasing locally grown food and food products.			X
(e) Priority guidelines for water use and development:			
(1) Maintain and improve water conservation programs to reduce the overall water consumption rate.			X
(2) Encourage the improvement of irrigation technology and promote the use of nonpotable water for agricultural and landscaping purposes.			X
(3) Increase the support for research and development of economically feasible alternative water sources.			X
(4) Explore alternative funding sources and approaches to support future water development programs and water system improvements.			X
(f) Priority guidelines for energy use and development:			
(1) Encourage the development, demonstration, and commercialization of renewable energy sources.			X
(2) Initiate, maintain, and improve energy conservation programs aimed at reducing energy waste and increasing public awareness of the need to conserve energy.			X
(3) Provide incentives to encourage the use of energy conserving technology in residential, industrial, and other buildings.			X
(4) Encourage the development and use of energy conserving and cost-efficient transportation systems.			X
(g) Priority guidelines to promote the development of the information industry:			
(1) Establish an information network, with an emphasis on broadband and wireless infrastructure and capability, that will serve as the foundation of and catalyst for overall economic growth and diversification in Hawai'i.			X
(2) Encourage the development of services such as financial data processing, a products and services exchange, foreign language translations, telemarketing, teleconferencing, a twenty-four-hour international stock exchange, international banking, and a Pacific Rim management center.			X

HAWAI'I STATE PLAN, CHAPTER 226, HRS – PART III. PRIORITY GUIDELINES **(Key: S = Supportive, N/S = Not Supportive, N/A = Not Applicable)**	**S**	**N/S**	**N/A**
(3) Encourage the development of small businesses in the information field such as software development, the development of new information systems, peripherals, and applications; data conversion and data entry services; and home or cottage services such as computer programming, secretarial, and accounting services.			X
(4) Encourage the development or expansion of educational and training opportunities for residents in the information and telecommunications fields.			X
(5) Encourage research activities, including legal research in the information and telecommunications fields.			X
(6) Support promotional activities to market Hawai'i's information industry services.			X
(7) Encourage the location or co-location of telecommunication or wireless information relay facilities in the community, including public areas, where scientific evidence indicates that the public health, safety, and welfare would not be adversely affected.			X
Discussion: The proposed Project has no direct relation to the State's economic priority guidelines, other than that affordable workforce housing will help to maintain career opportunities for Hawai'i's people.			
HRS § 226-104: Population growth and land resources priority guidelines.			
(a) Priority guidelines to effect desired statewide growth and distribution:			
(1) Encourage planning and resource management to insure that population growth rates throughout the State are consistent with available and planned resource capacities and reflect the needs and desires of Hawai'i's people.			X
(2) Manage a growth rate for Hawai'i's economy that will parallel future employment needs for Hawai'i's people.			X
(3) Ensure that adequate support services and facilities are provided to accommodate the desired distribution of future growth throughout the State.			X
(4) Encourage major state and federal investments and services to promote economic development and private investment to the neighbor islands, as appropriate.			X
(5) Explore the possibility of making available urban land, low-interest loans, and housing subsidies to encourage the provision of housing to support selective economic and population growth on the neighbor islands.			X
(6) Seek federal funds and other funding sources outside the State for research, program development, and training to provide future employment opportunities on the neighbor islands.			X
(7) Support the development of high technology parks on the neighbor islands.			X
(b) Priority guidelines for regional growth distribution and land resource utilization:			
(1) Encourage urban growth primarily to existing urban areas where adequate public facilities are already available or can be provided with reasonable public expenditures, and away from areas where other important benefits are			X

HAWAI'I STATE PLAN, CHAPTER 226, HRS – PART III. PRIORITY GUIDELINES (Key: S = Supportive, N/S = Not Supportive, N/A = Not Applicable)	S	N/S	N/A
present, such as protection of important agricultural land or preservation of lifestyles.			
(2) Make available marginal or nonessential agricultural lands for appropriate urban uses while maintaining agricultural lands of importance in the agricultural district.			X
(3) Restrict development when drafting of water would result in exceeding the sustainable yield or in significantly diminishing the recharge capacity of any groundwater area.			X
(4) Encourage restriction of new urban development in areas where water is insufficient from any source for both agricultural and domestic use.			X
(5) In order to preserve green belts, give priority to state capital-improvement funds which encourage location of urban development within existing urban areas except where compelling public interest dictates development of a noncontiguous new urban core.			X
(6) Seek participation from the private sector for the cost of building infrastructure and utilities, and maintaining open spaces.			X
(7) Pursue rehabilitation of appropriate urban areas.			X
(8) Support the redevelopment of Kaka'ako into a viable residential, industrial, and commercial community.			X
(9) Direct future urban development away from critical environmental areas or impose mitigating measures so that negative impacts on the environment would be minimized.			X
(10) Identify critical environmental areas in Hawai'i to include but not be limited to the following: watershed and recharge areas; wildlife habitats (on land and in the ocean); areas with endangered species of plants and wildlife; natural streams and water bodies; scenic and recreational shoreline resources; open space and natural areas; historic and cultural sites; areas particularly sensitive to reduction in water and air quality; and scenic resources.			X
(11) Identify all areas where priority should be given to preserving rural character and lifestyle.			X
(12) Utilize Hawai'i's limited land resources wisely, providing adequate land to accommodate projected population and economic growth needs while ensuring the protection of the environment and the availability of the shoreline, conservation lands, and other limited resources for future generations.	X		
(13) Protect and enhance Hawai'i's shoreline, open spaces, and scenic resources.			X
Discussion: By locating the Project on the site of an existing high school parking lot, the proposed Project facilitates the use of available developable and underutilized urban lands for housing, while taking into account the physical setting and accessibility to public facilities and services.			

HAWAI'I STATE PLAN, CHAPTER 226, HRS – PART III. PRIORITY GUIDELINES (Key: S = Supportive, N/S = Not Supportive, N/A = Not Applicable)	S	N/S	N/A
HRS § 226-105: Crime and criminal justice.			
Priority guidelines in the area of crime and criminal justice:			
(1) Support law enforcement activities and other criminal justice efforts that are directed to provide a safer environment.			X
(2) Target state and local resources on efforts to reduce the incidence of violent crime and on programs relating to the apprehension and prosecution of repeat offenders.			X
(3) Support community and neighborhood program initiatives that enable residents to assist law enforcement agencies in preventing criminal activities.			X
(4) Reduce overcrowding or substandard conditions in correctional facilities through a comprehensive approach among all criminal justice agencies which may include sentencing law revisions and use of alternative sanctions other than incarceration for persons who pose no danger to their community.			X
(5) Provide a range of appropriate sanctions for juvenile offenders, including community-based programs and other alternative sanctions.			X
(6) Increase public and private efforts to assist witnesses and victims of crimes and to minimize the costs of victimization.			X
Discussion: The proposed Project has no direct relation to the State's priority guidelines in the area of crime and criminal justice.			
HRS § 226-106: Affordable housing.			
Priority guidelines for the provision of affordable housing:			
(1) Seek to use marginal or nonessential agricultural land and public land to meet housing needs of low- and moderate-income and gap-group households.	X		
(2) Encourage the use of alternative construction and development methods as a means of reducing production costs.			X
(3) Improve information and analysis relative to land availability and suitability for housing.			X
(4) Create incentives for development which would increase home ownership and rental opportunities for Hawai'i's low- and moderate-income households, gap-group households, and residents with special needs.	X		
(5) Encourage continued support for government or private housing programs that provide low interest mortgages to Hawai'i's people for the purchase of initial owner- occupied housing.			X
(6) Encourage public and private sector cooperation in the development of rental housing alternatives.	X		
(7) Encourage improved coordination between various agencies and levels of government to deal with housing policies and regulations.	X		
(8) Give higher priority to the provision of quality housing that is affordable for Hawai'i's residents and less priority to development of housing intended primarily for individuals outside of Hawai'i.	X		

HAWAI'I STATE PLAN, CHAPTER 226, HRS – PART III. PRIORITY GUIDELINES **(Key: S = Supportive, N/S = Not Supportive, N/A = Not Applicable)**	**S**	**N/S**	**N/A**
Discussion: The proposed Project supports the State's objectives and policies for affordable housing by providing reasonably priced, safe, sanitary, and livable teacher workforce housing, conveniently located in a desirable residential community in close proximity to retail and recreational amenities, as well as other public facilities and services.			
HRS § 226-107: Quality education.			
Priority guidelines to promote quality education:			
(1) Pursue effective programs which reflect the varied district, school, and student needs to strengthen basic skills achievement;			X
(2) Continue emphasis on general education "core" requirements to provide common background to students and essential support to other university programs;			X
(3) Initiate efforts to improve the quality of education by improving the capabilities of the education work force;			X
(4) Promote increased opportunities for greater autonomy and flexibility of educational institutions in their decision-making responsibilities;			X
(5) Increase and improve the use of information technology in education by the availability of telecommunications equipment for:			
(A) The electronic exchange of information;			X
(B) Statewide electronic mail; and			X
(C) Access to the Internet.			X
Encourage programs that increase the public's awareness and understanding of the impact of information technologies on our lives;			X
(6) Pursue the establishment of Hawai'i's public and private universities and colleges as research and training centers of the Pacific;			X
(7) Develop resources and programs for early childhood education;			X
(8) Explore alternatives for funding and delivery of educational services to improve the overall quality of education; and			X
(9) Strengthen and expand educational programs and services for students with special needs.			X
Discussion: The proposed Project has no direct relation to the State's priority guidelines to promote quality education, however, the proposed Project will support efforts to attract new teachers and retain current teachers by providing affordable workforce housing.			
HRS § 226-108: Sustainability.			
Priority guidelines and principles to promote sustainability shall include:			
(1) Encouraging balanced economic, social, community, and environmental priorities;			X
(2) Encouraging planning that respects and promotes living within the natural resources and limits of the State;	X		

HAWAI'I STATE PLAN, CHAPTER 226, HRS – PART III. PRIORITY GUIDELINES **(Key: S = Supportive, N/S = Not Supportive, N/A = Not Applicable)**	**S**	**N/S**	**N/A**
(3) Promoting a diversified and dynamic economy;			X
(4) Encouraging respect for the host culture;			X
(5) Promoting decisions based on meeting the needs of the present without compromising the needs of future generations			X
(6) Considering the principles of the ahupua'a system; and			X
(7) Emphasizing that everyone, including individuals, families, communities, businesses, and government, has the responsibility for achieving a sustainable Hawai'i.			X
Discussion: The proposed Project will promote sustainable building strategies such as daylighting, natural ventilation, LED lighting and occupancy sensors.			
HRS § 226-109: Climate change adaptation priority guidelines.			
Priority guidelines to prepare the State to address the impacts of climate change, including impacts to the areas of agriculture; conservation lands; coastal and nearshore marine areas; natural and cultural resources; education; energy; higher education; health; historic preservation; water resources; the built environment, such as housing, recreation, transportation; and the economy shall:			
(1) Ensure that Hawai'i's people are educated, informed, and aware of the impacts climate change may have on their communities;			X
(2) Encourage community stewardship groups and local stakeholders to participate in planning and implementation of climate change policies;			X
(3) Invest in continued monitoring and research of Hawai'i's climate and the impacts of climate change on the State;			X
(4) Consider native Hawaiian traditional knowledge and practices in planning for the impacts of climate change;			X
(5) Encourage the preservation and restoration of natural landscape features, such as coral reefs, beaches and dunes, forests, streams, floodplains, and wetlands, that have the inherent capacity to avoid, minimize, or mitigate the impacts of climate change;			X
(6) Explore adaptation strategies that moderate harm or exploit beneficial opportunities in response to actual or expected climate change impacts to the natural and built environments;			X
(7) Promote sector resilience in areas such as water, roads, airports, and public health, by encouraging the identification of climate change threats, assessment of potential consequences, and evaluation of adaptation options;			X
(8) Foster cross-jurisdictional collaboration between county, state, and federal agencies and partnerships between government and private entities and other nongovernmental entities, including nonprofit entities;			X
(9) Use management and implementation approaches that encourage the continual collection, evaluation, and integration of new information and strategies into new and existing practices, policies, and plans; and			X

HAWAI'I STATE PLAN, CHAPTER 226, HRS – PART III. PRIORITY GUIDELINES (Key: S = Supportive, N/S = Not Supportive, N/A = Not Applicable)	S	N/S	N/A
(10) Encourage planning and management of the natural and built environments that effectively integrate climate change policy.			X
Discussion: The Project site is located well inland of the shoreline at approximately the 700-foot elevation and would not be impacted by a 3.2-foot SLR-XA.			

5.1.5 Hawai'i 2050 Sustainability Plan

During the pre-Assessment Consultation process, OPSD wrote:

> *"As the 2050 Sustainability Plan was prepared to guide the attainment of sustainability and resilience goals and objectives for the State contained in HRS Chapter 226, OPSD recommends the DEA generally discuss the technologies and best practices and other mitigation measures for the Proposed Action that would advance implementation of the Recommended Actions in the 2021-2030 Focus Areas on pages 100-107 of the Hawai'i 2050 Sustainability Plan."* (Appendix A)

During the Draft EA comment period, OPSD wrote:

> *"OPSD has reviewed the section identifying the Hawaii 2050 Sustainability Plan. OPSD is pleased to see that this Project represents smart-growth principles, is committed to waste reduction, and demonstrates a strong commitment to integrating sustainable design principles."* (Appendix L)

Pursuant to Section 226-65, HRS, the *Hawai'i 2050 Sustainability Plan* serves as the State's sustainability and climate strategic action plan; aligns the State's goals, policies, and actions with the United Nations Sustainable Development Goals (SDGs); and recommends sustainability and climate change actions for 2020–2030. While highlighting the sustainability commitments the State has made through laws, policies, and plans that reflect local values, the *Hawai'i 2050 Sustainability Plan* also identifies eight focus areas with 38 strategies and more than 250 recommended actions that point to what is urgent to undertake in the next decade. The focus areas, strategies and recommended actions applicable to the Proposed Action (Focus Areas on pages 100-107 of the Hawai'i 2050 Sustainability Plan) are discussed in Table 13 below.

Table 13: Hawai'i 2050 Sustainability Plan

STATE OF HAWAI'I 2050 SUSTAINABILITY PLAN (Key: S = Supportive, N/S = Not Supportive, N/A = Not Applicable)	S	N/S	N/A
FOCUS AREA #1: PROMOTE A SUSTAINABLE ECONOMIC RECOVERY			
Discussion: The proposed project is not expected to follow any recommended actions regarding local agriculture, green workforce development and education, a diversified economy, or regenerative tourism because these strategies go beyond the scope of the MHS Teacher Workforce Housing Project.			

STATE OF HAWAI'I 2050 SUSTAINABILITY PLAN (Key: S = Supportive, N/S = Not Supportive, N/A = Not Applicable)	**S**	**N/S**	**N/A**
FOCUS AREA #2: REDUCE GREENHOUSE GAS EMISSIONS			
GHG EMISSIONS:			
STRATEGY 9: *Measure, manage, and plan for GHG emission reduction.*			
1. Develop a Climate Action Plan to meet the State's Zero Emissions Clean Economy Target by 2045, using Science Based Targets and the IPCC reports.			X
2. Require emission reductions by setting a more stringent post-2020 sector-wide cap.			X
3. Continue to measure GHG emissions through periodic updates of the state's GHG inventory.			X
4. Identify types of agricultural and aquacultural practices, public land and marine use policies, and on-farm managing practices that would provide greenhouse gas benefits and result in tangible economic benefits to agricultural and aquacultural operations.			X
5. Establish short-term and long-term benchmarks that would indicate how effectively agricultural and aquacultural activities have helped to reach the State's Zero Emission Clean Economy Target by 2045.			X
6. Explore establishing net-zero GHG goals for all projects, including construction and infrastructure projects, to meet Hawai'i's Zero Emissions Clean Economy Target by 2045.			X
7. Encourage smart-growth strategies to foster urban infill development and redevelopment to significantly reduce the number of vehicular trips taken, reduce traffic and congestion, and GHG emissions.	X		
Discussion: The proposed Project represents smart-growth, because it: adds multifamily residential to this portion of Mililani; takes advantage of compact building design; creates a range of housing opportunities and choices for DOE employees in Mililani (a highly desirable area of the island); fits in with an existing distinctive and attractive community with a strong sense of place (Mililani Town); represents infill development (and thus preserves open space, farmland, and natural beauty that surrounds Mililani Town); offers a variety of transportation choices (pedestrian, bicycle, TheBus). According to the Environmental Protection Agency, "Smart growth land use, planning and development strategies can reduce greenhouse gas emissions and help communities better prepare for climate change impacts while bringing multiple additional benefits." Thus, the proposed Project aligns with the overall intent of Strategy 9 by promoting smart growth development patterns that can lead to reduced GHG emissions; however, the proposed Project does not provide specific GHG emission reduction targets. The proposed Project specifically supports Strategy 9 through several key elements: • The Proposed Project will develop up to 95 workforce housing units in a high-density format on one of the largest high schools on O'ahu. Workforce			

STATE OF HAWAI'I 2050 SUSTAINABILITY PLAN (Key: S = Supportive, N/S = Not Supportive, N/A = Not Applicable)	S	N/S	N/A
housing co-located with a public high school can significantly reduce vehicle miles traveled and associated GHG emissions compared to traditional suburban development. • The Proposed Project aims to achieve LEED Silver or equivalent rating requirements, which will incorporate energy efficiency measures to reduce GHG emissions from building operations. • The Proposed Project's location and design support "smart growth" principles by encouraging development in an already urbanized area with existing infrastructure and complimentary nearby land uses (public schools for school-aged children), jobs, parks, regional shopping center, library, post office), rather than expanding into undeveloped areas. The availability of sidewalks and crosswalks (existing and planned), and the Project's proximity to the TheBus Route 52 will encourage public transit use and reduce reliance on personal vehicles.			
STRATEGY 10: *Incorporate climate change planning into decision-making processes.*			
1. Screen projects over a particular size for impact on climate change mitigation or achievement of other SDGs.			X
2. Consider the impact of agency plans, decisions, and strategies on the State's ability to achieve its climate and sustainability goals—including the State's ability to achieve the Zero Emissions Clean Economy Target by 2045—weighed appropriately against their primary purpose.			X
3. Give consideration to climate change planning in land use planning.	X		
4. Investigate the possibility of establishing a fund to support and incentivize voluntary greenhouse gas reduction measures and set funding criteria that will make the most economic sense of the state (including from: voluntary contributions from individuals or organizations, tax revenue, utility ratepayer revenue, or financial institutions).			X
Discussion: The Proposed Project's location and design support "smart growth" principles by encouraging development in an already urbanized area with existing infrastructure and complimentary land uses (public schools, jobs, parks, regional shopping center, library, post office), rather than expanding into undeveloped areas. With complimentary land uses within walking range, there should be less reliance on personal motorized vehicles, reducing climate change impacts. Thus, the proposed Project aligns with the overall intent of Strategy 10.			
CLEAN & EFFICIENT ENERGY:			
STRATEGY 11: *Promote energy conservation and efficiency through outreach, communication, and community and public engagement.*			
1. Improve the awareness and understanding of energy resources by investing in ongoing community-based energy education.	X		

STATE OF HAWAI'I 2050 SUSTAINABILITY PLAN (Key: S = Supportive, N/S = Not Supportive, N/A = Not Applicable)	S	N/S	N/A
2. Develop a clean energy public education plan and curriculum in coordination with institutions of public education.			X
3. Create incentives for energy-efficient behavior.			X
4. Study how energy conservation can be used as an incentive for, and complement to, water conservation.			X
Discussion: The proposed Project aligns with the overall intent of Strategy 11 as the Applicant will provide residents with energy education; focusing on what actions each resident can take to reduce their energy bills (and his/her housing costs).			
STRATEGY 12: *Continue to invest in the deployment of clean energy technologies to reduce reliance on fossil fuels.*			
1. Advance the 1-year, 2-year, and 5-year actions identified in the 2020 Hawai'i State Energy Office (HSEO) Annual Report on energy efficiency, clean transportation, energy assurance and resiliency, and renewable energy deployment.			X
2. Align policies and processes to enable adoption of more renewable energy sources and accelerate the adoption of storage.			X
3. Enable grid improvement and modernization toward greater interconnection of renewable resources.			X
4. Work on innovative clean energy initiatives (for example, biofuels, hydrogen, microgrids, working with community-friendly developers).			X
5. Expand micro-gridding, grid planning, cluster-based energy, and smart meters throughout the state.			X
6. Increase renewable energy installations through energy performance contracts.			X
7. Increase solar and storage battery projects.			X
8. Increase statewide rooftop photovoltaic installation.	X		
9. Encourage and expand zero emissions vehicle charging in public areas, commercial areas, workplaces, households, and apartment dwellings.	X		
10. Improve access to energy efficiency, renewable energy, and zero emissions vehicle charging options for rental units and condos.	X		
11. Inspire and transform Hawai'i's clean energy future and expand the use of hydrogen fuel cell technology.			X
12. Educate the general public on the benefits of hydrogen fuel cell technology.			X

STATE OF HAWAI'I 2050 SUSTAINABILITY PLAN (Key: S = Supportive, N/S = Not Supportive, N/A = Not Applicable)	**S**	**N/S**	**N/A**
Discussion: The proposed Project aligns with the overall intent of Strategy 12 as the proposed Project will include rooftop photovoltaic panels and a zero emissions vehicle charging station.			
SUSTAINABLE TRANSPORTATION:			
STRATEGY 13: *Expand the adoption of zero emission vehicles (ZEVs).*			
1. Implement expanded infrastructure for ZEVs, including energy storage and increasing the availability of electric charging and hydrogen fueling stations.	X		
2. Adopt a plan for statewide adoption of ZEVs.			X
3. Incorporate ZEVs into State and County government fleet.			X
Discussion: The proposed Project aligns with the overall intent of Strategy 13 as the proposed Project will include rooftop photovoltaic panels and a zero emissions vehicle charging station.			
STRATEGY 14: *Promote alternative modes of transportation.*			
1. Promote safe, connected multimodal transportation options focusing on equitable opportunities to walk, bike, and rely on other forms of active transportation to connect to transit.	X		
2. Develop bike and pedestrian pathway networks statewide to increase multimodal connectivity.			X
3. Create transportation hubs designed to facilitate transfer from one mode of transportation to other modes of transportation while enhancing rider comfort and safety.			X
4. Expand public transportation systems to facilitate home to work commuting in areas with the greatest economic need.			X
5. Modernize transportation planning and projects to: enhance equity for all communities, reduce transportation costs to residents, minimize injuries and fatalities, improve public health and quality of life, and reduce greenhouse gas emissions.			X
6. Use travel demand forecasting and other tools to assess future road capacities and the effectiveness of alternative modes of travel.			X
7. Promote alternative transportation options in the development of new communities and infrastructure.	X		
Discussion: The proposed Project aligns with the overall intent of Strategy 14 as the proposed Project will have pedestrian connections to campus walkways and the sidewalk along Meheula Parkway (as well as a bus stop at the intersection with Hikikaulia Street), as well as bike racks.			

STATE OF HAWAI'I 2050 SUSTAINABILITY PLAN (Key: S = Supportive, N/S = Not Supportive, N/A = Not Applicable)	**S**	**N/S**	**N/A**
WASTE MANAGEMENT:			
STRATEGY 15: *Reduce the generation of waste, including plastic waste.*			
1. Advance sustainable purchasing practices for state, county, and commercial procurement.			X
2. Use financial mechanisms to incentivize waste reduction.			X
3. Update the Department of Health (DOH) Health Code as needed to increase the use of reusables in food service.			X
4. Develop strategies to encourage plastic reduction and reuse in the food service industry, such as reusable container incentive programs for customers.			X
5. Develop recommendations for the implementation of a uniform, statewide policy for single-use plastics such as plastic bags and polystyrene foam containers that can replace existing county ordinance and provide business with laws that are consistent throughout the state.			X
6. Study and develop recommendations to implement extended producer responsibility to address solid waste, including bulky items and plastic packaging.			X
7. Review and update existing legislation to achieve statewide waste reduction goals.			X
8. Establish a 5-year state facilitated education campaign about waste reduction.			X
Discussion: The proposed Project will be designed and constructed to minimize construction waste, and once constructed, will include receptacles for recyclables for residents but specific policies and programs to reduce waste generation, particularly plastic waste, are beyond the scope of the MHS Teacher Workforce Housing Project.			
STRATEGY 16: *Increase diversion of waste through recycling, reuse, and composting.*			
1. Reduce waste through encouraging source reduction and increased use of repairing, recycling, and composting services for residential, commercial, governmental, and industrial waste.	X		
2. Accelerate regional composting statewide.			X
3. Require owners and managers of multi-family dwellings and multi- tenant commercial buildings to provide recycling services.	X		
4. Comply with laws requiring recycling in state-owned facilities.	X		
5. Expand opportunities for methane capture and reuse at landfills, waste-to-energy facilities, wastewater treatment facilities, and anaerobic digesters.			X

STATE OF HAWAIʻI 2050 SUSTAINABILITY PLAN (Key: S = Supportive, N/S = Not Supportive, N/A = Not Applicable)	**S**	**N/S**	**N/A**
6. Evaluate recycling opportunities for large volume and hazardous waste streams, such as photo-voltaic solar panels and lithium-ion batteries from electric vehicles.			X
7. Update the State's Integrated Solid Waste Management Plan.			X
8. Review and update existing legislation to achieve statewide diversion goals.			X
Discussion: The proposed Project aligns with the overall intent of Strategy 16 as the proposed Project will be designed and constructed to minimize construction waste, and once constructed, will include receptacles for recyclables for residents.			
FOCUS AREA #3: IMPROVE CLIMATE RESILIENCE			
STRATEGY 17: *Integrate climate change adaptation and resilience considerations into planning and implementation.*			
1. Improve interagency and intragovernmental coordination to assess and address impacts from sea level rise, flooding, drought, heat, wildfire, and other climate-related hazards.	X		
2. Inventory and analyze critical infrastructure assets threatened by climate-related hazards (e.g., those along shoreline threatened by chronic and episodic coastal hazards and future sea level rise projections).			X
3. Investigate the financial risk to/exposure of the state associated with climate change.			X
4. Study the impacts of sea level rise projections on cultural and archeological resources, such as gathering sites, fishponds or fish traps (loko iʻa), places of worship and shrines (heiau), and petroglyphs (kiʻi pohaku).			X
5. Coordinate across agencies with operational responsibilities over state facilities to: identify existing and planned facilities that are vulnerable to climate-related hazards; assess options to increase the resilience of those facilities; and report on progress made in implementing adaptation strategies in future plans, programs, and capital improvement needs and decisions.			X
6. Develop a statewide Climate Adaptation and Resilience Implementation Plan.			X
7. Incorporate regional managed retreat or strategic relocation analysis into planning.			X
8. Study the feasibility of and prioritize nature- based solutions (e.g., on Hawaiʻi's high energy shorelines to manage and mitigate erosion).			X
9. Include the increased and changing risks of chemical contamination due to sea level rise and increased flooding from climate change in future updates to the Hawaiʻi 2050 Sustainability Plan and 2017 Sea Level Rise Vulnerability and			X

STATE OF HAWAI'I 2050 SUSTAINABILITY PLAN (Key: S = Supportive, N/S = Not Supportive, N/A = Not Applicable)	**S**	**N/S**	**N/A**
Adaptation Report, and incorporate efforts to mitigate risks in state, county, and local planning.			
Discussion: The PacIOOS, Sea Level Rise: Hawai'i Sea Level Rise Viewer, 2019, was consulted and the Project site is unlikely to be directly impacted by a 6-foot high SLR. The proposed Project is not anticipated to have any impact or any deleterious effects on natural hazard conditions (such as flooding, tsunami, hurricanes, earthquakes, SLR, droughts and wildfires), and no unique mitigation measures are planned, other than observing the International Building Code in the design of the facility (to address the potential impacts from hurricanes and earthquakes).			
STRATEGY 18: *Assess and communicate the impacts of climate change to residents, businesses, and communities most likely to be impacted.*			
1. Develop a network of community resilience hubs.			X
2. Engage state and county agencies, private sector, and nonprofit organizations in identifying the most critical climate risks facing the state.			X
3. Invest in the continued monitoring and research on the impacts of weather hazards under climate change on the state and mitigation measures.			X
4. Increase public awareness about climate risks facing the state, counties, and the public and actions they can take individually to increase their resilience and minimize negative impacts.	X		
Discussion: This EA demonstrates alignment with Strategy 18 by assessing and considering the impacts of climate change on the proposed Project. Information regarding flooding, tsunami evacuation zones, hurricane storm surge hazards and SLR are presented in Section 3.5 of this EA.			
STRATEGY 19: *Implement actions that improve the state's resilience to climate change.*			
1. Establish an emergency food supply and storage strategy.			X
2. Identify and select adaptation strategies (e.g., infrastructure investments, policy changes) that increase Hawai'i's resilience while upholding the goals of doing so equitably (e.g., using an equity lens framework) and in line with Native Hawaiian, Traditional Ecological Knowledge, and local values.			X
3. Articulate the business case for investments in resilience strategies (estimating costs of inaction as well as financial benefits of investments) to ensure reliable energy, transportation fuel, and other systems.			X
4. Seek federal funding to increase the resilience of Hawai'i's infrastructure and other assets (through implementation of strategies to protect, accommodate, and/or relocate).			X
Discussion: While the proposed Project has no direct correlation with Strategy 19, it should be noted that in 2021, the Mililani Disaster Preparedness Team (MDPT)			

STATE OF HAWAI'I 2050 SUSTAINABILITY PLAN (Key: S = Supportive, N/S = Not Supportive, N/A = Not Applicable)	S	N/S	N/A
prepared a draft *Mililani Community Emergency Plan* report. The report identified the most dangerous climate change-related natural hazard to Mililani Town: *"Our most dangerous hazard is hurricanes and our most likely threat is thunder and severe storms. Both of these hazards potentially bring high winds and heavy rainfall which could cause extensive damage to structures and infrastructure, down trees, and isolate part or all of Mililani for an extended period until routes are cleared and responders arrive.* *In general, wind speeds vary with height above ground—the higher the elevation, the stronger the wind. As a result, the mountainous areas of the State of Hawai'i generally experience the highest wind speeds. As Mililani's elevation is approximately 627 feet, wind speeds will increase as they move over the surrounding hills, ridges and escarpments (steep slopes or long cliffs) that surround Mililani. This phenomenon is known as wind speed-up. The Potential Wind Speed-up effect on Mililani is between 120-160% greater than the speed of the wind at lower flat open terrain as shown on the Potential Wind Speed up Effect on Mililani map. For Category 3 or 4 hurricanes, wind speed could exceed 200 mph as it passes over Mililani.* *Because wind speed is related to wind pressure, structures in wind speed-up areas will experience more severe damages than those located on flat, open terrain if building codes did not take the local topographic factor into consideration. In the past, the magnitude of wind speed-up caused by topography in the State of Hawai'i has not been well understood and it was not historically considered in any building code used in the State.* *The first homes in Mililani Town were sold in 1968 and it is unlikely that those homes were built with hurricane clips. It is likely that Mililani Town homes that had plans dated 1987 or later; built after 1988 were the first to probably have hurricane clips.* *It is expected that the majority of Mililani Mauka homes have hurricane clips and those built with plans dated 1994 or later; built 1995 or after have complete load path connections, including hurricane clips.* *Many of the other identified hazards in the table will affect localized areas in Mililani and the majority of Mililani residents will be unaffected. The response to most of these incidents is within the City and County of Honolulu and first responder capabilities and should not require assistance from the Mililani Disaster Preparedness Team.* ***Response to a direct hurricane strike on Oahu is beyond the capabilities of the State and City and County and will require a large Federal response.*** *Previous FEMA hurricane plans have identified that a response to a major hurricane strike on Oahu will be larger and more complex and expensive than the response to Hurricane Katrina in Louisiana. Mililani could be isolated for many weeks until help and assistance arrives. Until the airport and ports and roadways are cleared and ships and aircraft arrive, supplies will not be distributed to communities. Mililani residents must have at least a 14 day emergency kit (preferably 30 days), for all family members and pets and should attempt to be prepared for a longer period if possible."*			

STATE OF HAWAI'I 2050 SUSTAINABILITY PLAN (Key: S = Supportive, N/S = Not Supportive, N/A = Not Applicable)	**S**	**N/S**	**N/A**
The plan divided Mililani into sections, highlighting rally/distribution areas, shelters and recreation centers. The proposed Project is located in Section B. Within Section B, MHS is identified as both a Rally/Distribution Area and a Shelter.			
STRATEGY 20: *Increase the resilience of vulnerable populations to the impacts of climate change and other shocks and stressors.*			
1. Develop a Social Vulnerability Index to identify populations most at risk.			X
2. Apply the Social Vulnerability Index (SVI) to develop climate adaptation strategies that are targeted to addressing vulnerabilities.			X
3. Encourage community involvement and resilience by working with community members, matching community partners with funders, and initiating conversations between communities and the government.			X
Discussion: The proposed Project has no direct correlation with Strategy 20.			
FOCUS AREA #4: ADVANCE SUSTAINABLE COMMUNITIES			
STRATEGY 21: *Advance smart growth initiatives and multimodal transportation systems.*			
1. Promote human-powered transportation, multimodal systems, and connectivity throughout the state.	X		
2. Implement the Department of Transportation's Statewide Pedestrian Master Plan.	X		
3. Increase the urban tree canopy and increase dedicated bike lane miles.	X		
4. Integrate state and county transit-oriented development and smart growth measures in creating sustainable, livable communities.	X		
5. Increase public availability of outdoor spaces and provide areas where people can interact with nature and each other and reduce urban heat island effects.	X		
6. Advance multimodal transportation systems into the land use planning of new communities and redevelopment of existing communities.	X		
Discussion: The proposed Project represents smart-growth, because it: adds multifamily residential to this portion of Mililani; takes advantage of compact building design; creates a range of housing opportunities and choices for DOE employees in Mililani (a highly desirable area of the island); fits in with an existing distinctive and attractive community with a strong sense of place (Mililani Town); represents infill development (and thus preserves open space, farmland, and natural beauty that surrounds Mililani Town); offers a variety of transportation choices (pedestrian, bicycle, TheBus). According to the Environmental Protection Agency, *"Smart growth land use, planning and development strategies can reduce greenhouse gas emissions and help communities better prepare for climate change*			

STATE OF HAWAI'I 2050 SUSTAINABILITY PLAN (Key: S = Supportive, N/S = Not Supportive, N/A = Not Applicable)	**S**	**N/S**	**N/A**
impacts while bringing multiple additional benefits." Thus, the proposed Project aligns with the overall intent of Strategy 21. The proposed Project supports Strategy 21 through several key elements: • The Proposed Project will develop up to 95 workforce housing units in a high-density format on one of the largest high schools on O'ahu. Workforce housing co-located with a public high school can significantly reduce vehicle miles traveled and associated GHG emissions compared to traditional suburban development. • The Proposed Project's location and design support "smart growth" principles by encouraging development in an already urbanized area with existing infrastructure and complimentary nearby land uses (public schools for younger school-aged children), jobs, parks, regional shopping center, library, post office), rather than expanding into undeveloped areas. The availability of sidewalks and crosswalks (existing and planned), Proposed Project's proximity to the TheBus Route 52 will further encourage use of public transit and reduce reliance on personal vehicles.			
STRATEGY 22: *Advance sustainability in school and university operations.*			
1. Adopt ZEVs in school fleets (e.g., schoolbuses), where feasible.			X
2. Expand more farm-to-school opportunities, including the 'aina pono program.			X
3. Incorporate sustainable development practices into educational curricula to promote sustainability through individual actions as well as community-wide initiatives.			X
4. Plan and implement strategies to achieve net-zero energy use in schools and universities by 2035.			X
5. Establish a Sustainability Coordinator position for the Department of Education to support and incorporate sustainable practices in K-12 public schools and plan for meeting the net- zero energy goal in schools.			X
6. Reduce waste through encouraging source reduction and increased use of repairing, reuse, recycling, and composting services in schools and universities statewide.	X		
Discussion: The proposed Project aligns with some aspects of Strategy 22 (reducing waste) as the proposed Project will be designed and constructed to minimize construction waste, and once constructed, will include receptacles for recyclables for residents.			
STRATEGY 23: *Integrate sustainable design principles into new and existing buildings.*			
1. Utilize and fund integration of efficiency and green building requirements for new construction and major renovation projects.	X		

STATE OF HAWAI'I 2050 SUSTAINABILITY PLAN (Key: S = Supportive, N/S = Not Supportive, N/A = Not Applicable)	S	N/S	N/A
2. Explore further use of building codes and standards to improve and direct efficiencies among the existing and new infrastructure of the State of Hawai'i.			X
3. Strengthen Hurricane Sheltering to highest degree possible to withstand Category 5 hurricanes.			X
4. Establish a homeowners retrofit grant program for severe storm events.			X
5. Ensure statewide resilient emergency power generation.			X
6. Incentivize the use of green roofs.			X
7. Study and implement green infrastructure design guidelines and policies.	X		
8. Support and expand on-site rainwater harvesting and stormwater management.	X		
9. Expand and integrate permeable pavement and concrete opportunities.	X		
10. Consider ecoblock/ecobuilding development to promote decentralized water and sustainable energy to reduce the development's carbon and water footprints.			X
11. Consider underground cistern/detention infiltration chambers and above ground cisterns to collect and store rooftop rainfall and storm water runoff for water reuse strategies.			X
12. Consider the adoption of a "one water approach" to provide integrated planning and implementation approach to managing finite water resources for long-term resilience and reliability, meeting both community and ecosystem needs.			X
13. Utilize green building performance tracking and metrics for building retrofits and consider impacts to building occupant health.			X
14. Collaborate with design professionals, developers, and contractors to identify synergistic sustainability and greenhouse gas emission reduction strategies that meet larger State and County goals while supporting affordability and workforce development.			X
15. Establish partnerships and capital to build, maintain, and enhance infrastructure and fund the development of sustainable housing.			X
16. Encourage innovative residential developments which result in: lower cost, the sustainable use of resources, more efficient use of land and infrastructure, greater convenience and privacy, and a distinct community identity.	X		
17. Update building codes and standards in a timely manner to increase clean energy and energy efficiency, water reuse and reclamation, and material resource efficiency among existing and new infrastructure in the State of Hawai'i.			X
18. Prioritize and fund the implementation and adoption of standards such as LEED® and ENERGY STAR®, to the extent that they support increased efficiency of buildings within the state.	X		

STATE OF HAWAI'I 2050 SUSTAINABILITY PLAN (Key: S = Supportive, N/S = Not Supportive, N/A = Not Applicable)	**S**	**N/S**	**N/A**
19. Continue to explore and support low-carbon building products to reduce greenhouse gas emissions in building materials.	X		
20. Continue to encourage development within existing urban centers to reduce vehicle miles traveled, reduce greenhouse gas emissions, promote transit-oriented development planning efforts, and increase the efficient use of infrastructure to create distinct communities throughout Hawai'i.	X		
21. Emphasize existing building reuse and adaptation of Hawai'i's extensive existing building stock to limit the embodied carbon impact of new construction.			X
Discussion: The proposed Project demonstrates a strong commitment to integrating sustainable design principles, aligning with Strategy 23. The proposed Project prioritizes energy efficiency, water conservation, stormwater management, and sustainable transportation options. By incorporating these elements, the proposed Project contributes to the creation of more resilient, environmentally friendly, and livable urban space in Mililani, supporting the state's broader sustainability goals. The proposed Project aligns with several aspects of Strategy 23, which focuses on integrating sustainable design principles into new buildings. Key elements of the proposed Project that support this strategy include: • Incorporating green infrastructure and LID solutions for stormwater management, such as bioswales and rain gardens. • Siting close to bus stop, which encourages compact, walkable communities and reduces reliance on automobiles. • Supporting the development of multi-modal transportation options, including pedestrian and bicycle infrastructure. This would include new paths and bike racks, as feasible. • Implementing water conservation measures and exploring water reuse strategies. • Exploring opportunities for on-site rainwater harvesting and stormwater management, as applicable. • Integrating permeable pavement and concrete opportunities where feasible. • Targeting LEED Silver or equivalent rating requirements. • Incorporating energy-efficient design elements to reduce overall energy consumption. • Implementing water conservation measures, including low-flow fixtures and drought-tolerant landscaping, as applicable. • Providing bicycle parking and promoting alternative transportation options. • Exploring opportunities for on-site rainwater harvesting and water reuse.			

STATE OF HAWAIʻI 2050 SUSTAINABILITY PLAN (Key: S = Supportive, N/S = Not Supportive, N/A = Not Applicable)	**S**	**N/S**	**N/A**
FOCUS AREA #5: ADVANCE EQUITY			
ACCESS TO RESOURCES:			
STRATEGY 24: *Strengthen broadband access to support digital learning and online solutions in rural areas.*			
1. Invest in programs that will provide students with digital content via tablets, laptops and other mobile devices.			X
2. Provide free high-speed Internet services in public areas in and around all state buildings, public libraries, and schools.			X
3. Enable rapid introduction of community broadband in areas that do not have effective broadband service.			X
4. Identify barriers to the adoption of broadband and information technology services through collection of public and private sector data, including outreach survey activities.			X
5. Expand broadband and increase remote work opportunities to reduce greenhouse gas emissions from commuting, and address equity for rural communities and other broadband-dependent services.	X		
6. Maintain a broadband mapping service to identify underserved communities.			X
7. Develop and implement provider and consumer incentives accordingly for last-mile installation or service subscription to encourage adoption and foster provision of affordable services in strategic areas.			X
8. Transition Hawaiʻi's government toward more digital systems.			X
9. Invest in and improve existing cable landing infrastructure.			X
10. Grow the Statewide Geographic Information Systems Program.			X
11. Support and adopt the goals set forth in the Digital Equity Declaration for Hawaiʻi adopted by the state's Broadband Hui.			X
12. Expand strategic broadband infrastructure to build a robust, resilient network including government-owned, non-profit or cooperative networks to enable all Hawaiʻi residents to access the global internet.			X
Discussion: While the proposed Project does not directly address rural broadband access, the proposed Project aligns with the broader goals of Strategy 24 by including digital infrastructure. Broadband access in the Project area could enable more remote work opportunities, potentially reducing commuter-related emissions. This contributes to the overall goal of strengthening Hawaiʻi's digital ecosystem, which can have positive ripple effects on education, economic development, and sustainability throughout the State.			

STATE OF HAWAI'I 2050 SUSTAINABILITY PLAN (Key: S = Supportive, N/S = Not Supportive, N/A = Not Applicable)	**S**	**N/S**	**N/A**
STRATEGY 25: *Continue to improve economic and social sustainability of individuals through access to affordable housing.*			
1. Implement strategies identified in the Affordable Rental Housing Report and Ten-Year Plan and the Hawai'i State Functional Plan on Housing.			X
2. Implement alternative financing mechanisms to support affordable housing, such as mixed-use developments.			X
3. Establish public-private partnerships to fund the development of sustainable housing.	X		
4. Increase affordable housing opportunities for households up to 140% of the AMI.	X		
5. Increase and sustain the supply of permanent rental housing that is affordable and accessible to Hawai'i residents, particularly those with incomes at or below 80% AMI.	X		
6. Support Hawaiian Home Lands Homesteading programs.			X
Discussion: The proposed Project aligns with some aspects of Strategy 25. The goal of this public-private partnership project is to offer new multifamily rental unit options in a variety of configurations (with a preference for studio, 1-, and 2-bedroom units) at affordable rents to Hawai'i's teachers and education personnel. Housing developed for this project shall be prioritized for licensed teachers, educators, and education staff, including DOE staff. Eligible applicants for rental units will be queued according to an education employee occupancy Priority List as follows: • First consideration will be given to households that include eligible teachers. A household is considered eligible for teacher occupancy priority if the household includes at least one current licensed teacher and meets the income restrictions, occupancy requirements, and all other requirements for the unit. • If available units are not filled by eligible teachers, second consideration of tenancy will be given to educational staff, including DOE employees, who meet the eligibility requirements for the unit. • Subject to fair housing laws, applications to the waitlist may also be accepted from other households, but consideration of any non-education employee for tenancy will occur only after any vacant unit has been offered to all eligible applicants from the waitlist. The same occupancy priority preferences will be used to queue eligible applicants added to the waitlist after initial lease up. Tenant selections shall be made in a nondiscriminatory manner without regard to considerations such as race, age, religion, color, sex, national origin, familial status, or disability. The Applicant shall be responsible for ensuring compliance with all applicable fair housing laws, rules, and regulations.			

STATE OF HAWAI'I 2050 SUSTAINABILITY PLAN (Key: S = Supportive, N/S = Not Supportive, N/A = Not Applicable)	**S**	**N/S**	**N/A**
STRATEGY 26: *Continue to implement strategies that reduce homelessness in Hawai'i to enhance livelihoods.*			
1. Work to reduce current homelessness by supporting rapid rehousing programs that provide equitable financial assistance to help people access safe housing.			X
2. Combat future homelessness by identifying persons at risk and connecting them with homelessness prevention programs such as supportive services, mediation in housing court, and rent subsidies.			X
3. Support permanent supportive housing for chronically homeless individuals experiencing the longest episodes of homelessness.			X
4. Review and implement best practices from programs such Kahauiki Village (O'ahu), Huliau (Maui) or Kealalula at Pua Loke (Kaua'i) that combine low-cost housing models with on-site supportive services, and a specific preference for households transitioning out of homelessness.			X
Discussion: The proposed Project has no direct correlation with Strategy 26.			
GENDER EQUITY:			
STRATEGY 27: *Continue to advance opportunities for all, regardless of gender.*			
1. Boost childcare, eldercare, and education, and offer support for women whose jobs and family roles may have been especially hurt by the COVID-19 global pandemic.			X
2. Increase sustainable employment opportunities for all, regardless of gender identification.			X
3. Increase gender diversity across state, local, and private sector leadership positions.			X
4. Increase awareness of the gender spectrum across all levels of government.			X
5. Ensure the representation of women, youth, LGBTQ+ persons, and immigrants within all levels of decision-making.			X
Discussion: The proposed Project has no direct correlation with Strategy 27. However, as previously noted, tenant selections shall be made in a nondiscriminatory manner without regard to considerations such as race, age, religion, color, sex, national origin, familial status, or disability. The Applicant shall be responsible for ensuring compliance with all applicable fair housing laws, rules, and regulations.			

STATE OF HAWAIʻI 2050 SUSTAINABILITY PLAN (Key: S = Supportive, N/S = Not Supportive, N/A = Not Applicable)	**S**	**N/S**	**N/A**
FOCUS AREA # 6: INSTITUTIONALIZE SUSTAINABILITY			
GOVERNMENT CAPACITY TO ADDRESS SUSTAINABILITY:			
STRATEGY 28: *Invest in staff and other resources to coordinate and advance sustainability goals across state agencies and local governments.*			
1. Continue to leverage government public-private partnerships to advance sustainable development goals.			X
2. Increase coordination across government, nonprofits, the private sector, and communities to address and implement the SDGs.			X
3. Fund and staff the State Sustainability Program and other statewide and county coordinating programs responsible for implementing the SDGs.			X
Discussion: The proposed Project has no direct correlation with Strategy 28, although the proposed Project will be sustainably designed.			
STRATEGY 29: *Update state policies to reflect sustainability and climate change priorities.*			
1. Update portions of the Hawaii State Planning Act to reflect current priorities for sustainability and climate change adaptation (e.g., focus on the update and modernization of the agriculture industry), including those identified in this plan.			X
2. Update the State Functional Plans that were not recently updated during the 21st century, to align with climate change and sustainability targets and better reflect the current state of planning needs, with a particular focus on the Energy, Agriculture, Conservation, Recreation, Transportation, and Tourism Functional Plans.			X
3. Integrate land use planning to address Hawaii's competing uses of land to mutually obtain local food production goals, affordable housing needs, sustainable energy goals, and conservation.	X		
4. The State Sustainability Program should measure the progress of these recommendations on every 5th year between the decennial update of this plan to ensure progress toward Hawaii's sustainability goals.			X
Discussion: The proposed Project aligns with some aspects of Strategy 29. It integrates land use planning to address affordable housing needs and sustainable energy goals in an urban infill location. The goal of this public-private partnership project is to offer new multifamily rental unit options in a variety of configurations (1- and 2-bedroom units) at affordable rents to Hawaiʻi's teachers and education personnel. Housing developed for this project shall be prioritized for licensed teachers, educators, and education staff, including DOE staff.			

STATE OF HAWAI'I 2050 SUSTAINABILITY PLAN (Key: S = Supportive, N/S = Not Supportive, N/A = Not Applicable)	**S**	**N/S**	**N/A**
GREEN GOVERNMENT OPERATIONS:			
STRATEGY 30: *Incorporate sustainability into government operations.*			
1. Procure environmentally preferable and sustainable products, including recycled and recycled-content, bio-based, and other resource-efficient products and materials.	X		
2. Design and construct government buildings that meet the LEED® rating systems or another comparable state-approved, nationally recognized, and consensus-based guideline, standard, or system, except when the guideline, standard, or system interferes or conflicts with the use of the building or facility as an emergency shelter.	X		
3. Implement water and energy efficiency practices in operations to reduce waste and increase conservation.	X		
4. Incorporate principles of waste minimization and pollution prevention, such as reducing, revising, and recycling as a standard operating practice in programs, including programs for waste management in construction and demolition projects and office paper and packaging recycling programs.	X		
5. Implement strategies to work toward on-site water reclamation and develop or retrofit infrastructure to support water reuse in 100% of government facilities by 2045.			X
6. Explore further opportunities to retrofit existing structures and to design new structures that reduce our carbon footprint and increase the government's ability to adapt to climate change impacts.	X		
7. Maximize the use of solar on or around all state buildings and parking facilities, especially for new construction and major renovations.	X		
Discussion: The proposed Project demonstrates a strong commitment to integrating sustainable design principles, aligning with Strategy 30. The proposed Project prioritizes energy efficiency, water conservation, stormwater management, and sustainable transportation options. By incorporating these elements, the proposed Project contributes to the creation of more resilient, environmentally friendly, and livable urban space in Mililani, supporting the state's broader sustainability goals. The proposed Project aligns with several aspects of Strategy 30, which focuses on incorporating sustainability into government operations. Key elements of the proposed Project that support this strategy include: • Incorporating green infrastructure and LID solutions for stormwater management, such as bioswales and rain gardens. • Siting close to bus stop, which encourages compact, walkable communities and reduces reliance on automobiles.			

STATE OF HAWAI'I 2050 SUSTAINABILITY PLAN (Key: S = Supportive, N/S = Not Supportive, N/A = Not Applicable)	S	N/S	N/A
• Supporting the development of multi-modal transportation options, including pedestrian and bicycle infrastructure. This would include new paths and bike racks, as feasible. • Implementing water conservation measures and exploring water reuse strategies. • Exploring opportunities for on-site rainwater harvesting and stormwater management, as applicable. • Integrating permeable pavement and concrete opportunities where feasible. • Targeting LEED Silver or equivalent rating requirements. • Incorporating energy-efficient design elements to reduce overall energy consumption. • Implementing water conservation measures, including low-flow fixtures and drought-tolerant landscaping, as applicable. • Providing bicycle parking and promoting alternative transportation options. • Exploring opportunities for on-site rainwater harvesting and water reuse.			
FOCUS AREA #7: PRESERVE THE NATURAL ENVIRONMENT			
CLEAN WATER:			
STRATEGY 31: *Improve water quality through reduced pollution and dumping.*			
1. Work toward the 2050 cesspool reduction requirement and develop infrastructure to support the elimination of cesspools.			X
2. Increase the shared understanding of green stormwater infrastructure among homeowners, government officials, practitioners, and private industry through continued outreach efforts.			X
3. Evaluate the use of green infrastructure along Hawaii's shoreline and throughout the coastal zone, with the dual-benefit of controlling erosion and other shoreline processes while mitigating the impacts of land-based pollution and inland flooding.			X
4. Sponsor symposia and trainings on green infrastructure installation and maintenance for professionals, homeowners, and advocates.			X
5. Identify adaptations needed to implement green infrastructure successfully in Hawai'i's unique conditions (topography, climate, soils, and development patterns).	X		
6. Study the efficacy, cost, and lifespan of green infrastructure and traditional water management techniques compared to the 'grey' infrastructure currently utilized in Hawaii.			X
7. Ensure that water quality improvement and water reuse strategies are incorporated with land use planning.	X		

STATE OF HAWAI'I 2050 SUSTAINABILITY PLAN (Key: S = Supportive, N/S = Not Supportive, N/A = Not Applicable)	**S**	**N/S**	**N/A**
Discussion: The proposed Project aligns with several aspects of Strategy 31, which focuses on improving water quality. Key elements of the proposed Project that support this strategy include: • Incorporating green infrastructure and LID solutions for stormwater management, such as bioswales and rain gardens. • Implementing water conservation measures and exploring water reuse strategies. • Exploring opportunities for on-site rainwater harvesting and stormwater management, as applicable. • Integrating permeable pavement and concrete opportunities where feasible. • Targeting LEED Silver or equivalent rating requirements. • Implementing water conservation measures, including low-flow fixtures and drought-tolerant landscaping, as applicable. • Exploring opportunities for on-site rainwater harvesting and water reuse.			
STRATEGY 32: *Support water reuse strategies to conserve water.*			
1. Establish mandatory recycled water use zones within reasonable transport distances from major sources of recycled water and establish incentives for developers.			X
2. Upgrade Water Reuse regulations to allow unrestricted irrigation with R-1 recycled water and allow use of municipal delivered R-1 recycled water in individual residences for landscape and crops irrigation.			X
3. Allow groundwater recharge with recycled water for: use as a barrier against seawater intrusion, aquifer storage and recovery, indirect potable reuse, and as a flood mitigation strategy.	X		X
4. Mandate use of recycled water where available for golf course, landscape, and agriculture irrigation within designated recycled water use zones.			X
5. Develop standards and guidelines for stormwater reclamation and reuse.			X
6. Conduct water audits of public water systems to verify use and aid water providers in identifying water losses.			X
7. Develop water shortage plans for priority water management areas.			X
8. Upgrade water reuse regulations to encourage uses of graywater within a development parcel with a simplified permitting system.			X
9. Ensure that water quality improvement and water reuse strategies are incorporated with land use planning.	X		

STATE OF HAWAI'I 2050 SUSTAINABILITY PLAN (Key: S = Supportive, N/S = Not Supportive, N/A = Not Applicable)	S	N/S	N/A
Discussion: The proposed Project aligns with several aspects of Strategy 32, which focuses on conserving water. Key elements of the proposed Project that support this strategy include: • Incorporating green infrastructure and LID solutions for stormwater management, such as bioswales and rain gardens. • Implementing water conservation measures and exploring water reuse strategies. • Exploring opportunities for on-site rainwater harvesting and stormwater management, as applicable. • Integrating permeable pavement and concrete opportunities where feasible. • Targeting LEED Silver or equivalent rating requirements. • Implementing water conservation measures, including low-flow fixtures and drought-tolerant landscaping, as applicable. • Exploring opportunities for on-site rainwater harvesting and water reuse. • Use of recycled water and stormwater reclamation can be incorporated for irrigation and other purpose, as applicable and permitted by approving agencies.			
MARINE RESOURCES & ECOSYSTEMS:			
STRATEGY 33: *Establish policies to protect Hawai'i's unique marine ecosystems.*			
1. Protect coral reef systems by establishing a network of ecological-connected marine management areas, informed by ecological and socio-cultural design principles created using the best readily available science, local expert knowledge including traditional ecological knowledge.			X
2. Increase education and outreach efforts to build a greater public awareness for responsible behavior affecting aquatic resources.			X
3. Support invasive species management and watershed protection.			X
Discussion: The proposed Project has no direct correlation with Strategy 33, although implementation of Strategy 31 should result in better water quality downstream and ultimately to marine ecosystems.			
STRATEGY 34: *Manage climate change impacts to marine resources.*			
1. Expand the use of sea level rise and land cover data in conducting stormwater assessments and modeling.			X
2. Protect ahupua'a that recharge freshwater supplies.			X
3. Evaluate the use of green stormwater infrastructure along Hawai'i's shoreline and throughout the coastal zone, with the dual benefit of controlling erosion and			X

STATE OF HAWAI'I 2050 SUSTAINABILITY PLAN (Key: S = Supportive, N/S = Not Supportive, N/A = Not Applicable)	S	N/S	N/A
other shoreline processes while mitigating the impacts of land-based pollution and inland flooding.			
Discussion: While the proposed Project incorporates some elements that support Strategy 34, particularly related to stormwater management and SLR considerations, it is beyond the scope of the proposed Project to address all aspects of managing climate change impacts to marine resources.			
NATURAL RESOURCE PROTECTION:			
STRATEGY 35: *Protect and manage watersheds.*			
1. Support long-term hydrologic monitoring programs to understand and document changes in watershed productivity that result from improved watershed management activities.			X
2. Increase research and monitoring of new emerging watershed and forest threats and develop approaches and management tools for controlling and reducing impacts on watersheds where found.			X
3. Identify specific areas, regions, or watersheds to target for concentrated efforts and collaborate on setting priority areas for watershed management with key federal, state, and county agency partners, landowners, and stakeholders.			X
4. Support research on the effects of climate change on watersheds and water resources in Hawaii.			X
5. Improve collaboration among county water departments, the CZM Program, DOH, EPA, the U.S. Fish and Wildlife Service (USFWS), DAR, and NRCS, which have overlapping priorities, to jointly set future priorities, to strategically advance projects for competitive grant opportunities at the local and national watershed-scale conservation programs, and to maximize the amount of watershed acreage being protected and the conservation benefits realized.			X
6. Improve methods for targeting and communicating with communities and the public about the importance of watershed management, the threats to Hawai'i's forests, and the community's role and contribution to improving management of watersheds locally and across the state.			X
7. Improve monitoring, data collection, and information sharing between the watershed partnerships, various private and public land management programs, and the ISCs to consolidate and collect comparable data regarding watershed and forest health, location of invasive species, management actions being taken, and impacts of land management activities on water quality and quantity.			X
8. Continue to implement non-point source water pollution management strategies to restore impaired waters and protect high quality waters from non-point source pollution.	X		

STATE OF HAWAI'I 2050 SUSTAINABILITY PLAN (Key: S = Supportive, N/S = Not Supportive, N/A = Not Applicable)	**S**	**N/S**	**N/A**
Discussion: The proposed Project has no direct correlation with Strategy 35, although implementation of Strategy 31 should result in better water quality downstream.			
STRATEGY 36: *Continue to adopt strategies that protect land-based natural resources.*			
1. Continue to fund, manage, protect, and improve Hawaii's natural resources against climate hazards.			
2. Identify the adequate level of hydrologic and climatic data collection needed statewide to enable effective decision- making about water security.			X
3. Improve recharge estimates to include the best available information on climate change impacts.			X
4. Improve estimates of stream flow characteristics, particularly during low-flow conditions.			X
5. Understand the impacts of native vs. non-native plant species on water resources and watersheds by supporting research and long-term hydrologic monitoring programs.			X
6. Construct new deep monitoring wells in critical aquifers to gather and utilize data to identify impacts from pumpage, climate, and land use changes; verify fresh water sustainable yields; and monitor recharge trends.			X
7. Reduce invasive species impacts through implementing Hawaii Interagency Biosecurity Plan.			X
Discussion: While the proposed Project incorporates some elements that support Strategy 36, particularly related to stormwater management, it is beyond the scope of each to implement all aspects of Strategy 36.			
STRATEGY 37: *Conserve working forest landscapes, protect forests from harm, and enhance public benefits from trees and forests.*			
1. Restore and conserve native forest species and ecosystems by using native species where possible and discouraging the use of potentially invasive species.	X		
2. Ensure that local and statewide climate change and drought plans, policy, and initiatives address wildfire.			X
3. Monitor resource vulnerability to climate change through improved data collection and refinement of models that are specific to Hawaii.			X
4. Investigate and pursue opportunities for obtaining certification of sustainable production and harvest practices for common market species.			X
5. Complete comprehensive management plans for all state forest reserves.			X

STATE OF HAWAI'I 2050 SUSTAINABILITY PLAN (Key: S = Supportive, N/S = Not Supportive, N/A = Not Applicable)	S	N/S	N/A
Discussion: While the proposed Project is an urban redevelopment initiative, it can incorporate elements that align with some aspects of Strategy 37. The proposed Project can contribute to urban forestry and the use of sustainable, potentially native plant species in urban settings. However, many of the strategy's points related to large-scale forest management and conservation are beyond the scope of the urban MHS Teacher Workforce Housing project. Nonetheless, the initiatives to increase urban tree canopy and implement sustainable landscaping practices demonstrate a commitment to enhancing the public benefits of trees and vegetation within urban environments, which is in line with the overall spirit of Strategy 37.			

5.1.6 State Environmental Policy, Chapter 344, Hawai'i Revised Statutes

The State Environmental Policy, as defined in HRS Chapter 344, establishes the policy of the State of Hawai'i on natural resource conservation and the environment. The Project's consistency with the State Environmental Policy is outlined in Table 14 below:

Table 14: State Environmental Policy, Chapter 344, HRS

State Environmental Policy, Chapter 344, Hawai'i Revised Statutes (Key: S = Supportive, N/S = Not Supportive, N/A = Not Applicable)	S	N/S	N/A
State Environmental Policy			
§344-3 Environmental policy. *It shall be the policy of the State, through its programs, authorities, and resources to:*			
(1) Conserve the natural resources, so that land, water, mineral, visual, air and other natural resources are protected by controlling pollution, by preserving or augmenting natural resources, and by safeguarding the State's unique natural environmental characteristics in a manner which will foster and promote the general welfare, create and maintain conditions under which humanity and nature can exist in productive harmony, and fulfill the social, economic, and other requirements of the people of Hawai'i.			X
(2) Enhance the quality of life by:			
(A) Setting population limits so that the interaction between the natural and artificial environments and the population is mutually beneficial;			X
(B) Creating opportunities for the residents of Hawai'i to improve their quality of life through diverse economic activities which are stable and in balance with the physical and social environments;			X
(C) Establishing communities which provide a sense of identity, wise use of land, efficient transportation, and aesthetic and social satisfaction in harmony with the natural environment which is uniquely Hawaiian; and			X
(D) Establishing a commitment on the part of each person to protect and enhance Hawai'i's environment and reduce the drain on nonrenewable resources.			X
Discussion: The proposed Project is planned in an urban area and will not involve State Conservation lands. The proposed Project supports the State's objectives and policies to conserve natural resources by providing reasonably priced, safe, sanitary, and livable teacher workforce housing, conveniently located in a long-established			

State Environmental Policy, Chapter 344, Hawai'i Revised Statutes (Key: S = Supportive, N/S = Not Supportive, N/A = Not Applicable)	**S**	**N/S**	**N/A**
residential community in close proximity to retail and recreational amenities, as well as other public facilities and services.			
Guidelines			
§344-4 Guidelines. *In pursuance of the state policy to conserve the natural resources and enhance the quality of life, all agencies, in the development of programs, shall, insofar as practicable, consider the following guidelines:*			
(1) Population.			
(A) Recognize population impact as a major factor in environmental degradation and adopt guidelines to alleviate this impact and minimize future degradation;			X
(B) Recognize optimum population levels for counties and districts within the State, keeping in mind that these will change with technology and circumstance, and adopt guidelines to limit population to the levels determined.			X
Discussion: The proposed Project will generate a relatively small increase in population. This will only come about if the proposed Project attracts teachers from off island or out-of-State.			
(2) Land, water, mineral, visual, air, and other natural resources.			
(A) Encourage management practices which conserve and fully utilize all natural resources;			X
(B) Promote irrigation and waste water management practices which conserve and fully utilize vital water resources;			X
(C) Promote the recycling of waste water;			X
(D) Encourage management practices which conserve and protect watersheds and water sources, forest, and open space areas;			X
(E) Establish and maintain natural area preserves, wildlife preserves, forest reserves, marine preserves, and unique ecological preserves;			X
(F) Maintain an integrated system of state land use planning which coordinates the state and county general plans;			X
(G) Promote the optimal use of solid wastes through programs of waste prevention, energy resource recovery, and recycling so that all our wastes become utilized.			X
Discussion: The proposed Project has no direct relationship to the management of land, water, mineral, visual, air, and other natural resources, other than that the location of the Project will minimize impacts to natural and visual resources by siting the proposed Project where the existing parking lot and lawn are located.			
(3) Flora and fauna.			
(A) Protect endangered species of indigenous plants and animals and introduce new plants or animals only upon assurance of negligible ecological hazard;			X

State Environmental Policy, Chapter 344, Hawai'i Revised Statutes (Key: S = Supportive, N/S = Not Supportive, N/A = Not Applicable)	S	N/S	N/A
(B) Foster the planting of native as well as other trees, shrubs, and flowering plants compatible to the enhancement of our environment.			X
Discussion: The Project is not in any critical habitat areas and will have no impact on endangered species.			
(4) Parks, recreation, and open space.			
(A) Establish, preserve and maintain scenic, historic, cultural, park and recreation areas, including the shorelines, for public recreational, educational, and scientific uses;			X
(B) Protect the shorelines of the State from encroachment of artificial improvements, structures, and activities;			X
(C) Promote open space in view of its natural beauty not only as a natural resource but as an ennobling, living environment for its people.			X
Discussion: The proposed Project will be located well inland of the shoreline, and will have no impact on scenic, historic, cultural, park, and recreation areas.			
(5) Economic development.			
(A) Encourage industries in Hawai'i which would be in harmony with our environment;			X
(B) Promote and foster the agricultural industry of the State; and preserve and conserve productive agricultural lands;			X
(C) Encourage federal activities in Hawai'i to protect the environment;			X
(D) Encourage all industries including the fishing, aquaculture, oceanography, recreation, and forest products industries to protect the environment;			X
(E) Establish visitor destination areas with planning controls which shall include but not be limited to the number of rooms;			X
(F) Promote and foster the aquaculture industry of the State; and preserve and conserve productive aquacultural lands.			X
Discussion: The proposed Project is not directly related to the State's policies for economic development.			
(6) Transportation.			
(A) Encourage transportation systems in harmony with the lifestyle of the people and environment of the State;			X
(B) Adopt guidelines to alleviate environmental degradation caused by motor vehicles;			X
(C) Encourage public and private vehicles and transportation systems to conserve energy, reduce pollution emission, including noise, and provide safe and convenient accommodations for their users.			X
Discussion: The proposed Project is not directly related to the State's policies for transportation.			

State Environmental Policy, Chapter 344, Hawai'i Revised Statutes (Key: S = Supportive, N/S = Not Supportive, N/A = Not Applicable)	**S**	**N/S**	**N/A**
(7) Energy.			
(A) Encourage the efficient use of energy resources.	X		
Discussion: The design of the new proposed Project will incorporate LED luminaires which are by nature much more energy efficient than legacy-type fixtures (T8 tubes) and will also incorporate code-required lighting controls consisting of occupancy sensors where required.			
(8) Community life and housing.			
(A) Foster lifestyles compatible with the environment; preserve the variety of lifestyles traditional to Hawai'i through the design and maintenance of neighborhoods which reflect the culture and mores of the community;			X
(B) Develop communities which provide a sense of identity and social satisfaction in harmony with the environment and provide internal opportunities for shopping, employment, education, and recreation;	X		
(C) Encourage the reduction of environmental pollution which may degrade a community;			X
(D) Foster safe, sanitary, and decent homes;	X		
(E) Recognize community appearances as major economic and aesthetic assets of the counties and the State; encourage green belts, plantings, and landscape plans and designs in urban areas; and preserve and promote mountain-to-ocean vistas.			X
Discussion: The proposed Project supports the State's objectives and policies for community life and housing by providing reasonably priced, safe, sanitary, and livable teacher workforce housing, conveniently located in a desirable residential community in close proximity to retail and recreational amenities, as well as other public facilities and services.			
(9) Education and culture.			
(A) Foster culture and the arts and promote their linkage to the enhancement of the environment;			X
(B) Encourage both formal and informal environmental education to all age groups.			X
Discussion: The proposed Project is not directly related to the State's policies on education and culture, although, indirectly, State teachers could benefit from the proposed Project.			
(10) Citizen participation.			
(A) Encourage all individuals in the State to adopt a moral ethic to respect the natural environment; to reduce waste and excessive consumption; and to fulfill the responsibility as trustees of the environment for the present and succeeding generations; and			X
(B) Provide for expanding citizen participation in the decision making process so it continually embraces more citizens and more issues.	X		

State Environmental Policy, Chapter 344, Hawai'i Revised Statutes (Key: S = Supportive, N/S = Not Supportive, N/A = Not Applicable)	S	N/S	N/A
Discussion: This EA discusses potential impacts and mitigation measures of the proposed Project and will provide an opportunity for citizen participation during the Draft EA Public Comment period.			

5.2 CITY AND COUNTY OF HONOLULU

During the pre-Assessment consultation process, DPP wrote the following:

> *"Consistency with Long-Range Plans: The Draft EA should address the proposed Project's consistency with the O'ahu General Plan and Central O'ahu Sustainable Communities Plan. The Draft EA should address how the proposed Project is consistent, inconsistent, or implements each of the relevant statements from the respective plans."* (Appendix A)

The O'ahu General Plan is discussed in Section 5.2.1 below, the Central O'ahu Sustainable Communities Plan (COSCP) is discussed in Section 5.2.2 below, and the LUO is discussed in Section 5.2.3 below.

5.2.1 O'ahu General Plan

The O'ahu General Plan is a comprehensive statement of objectives and policies, and a requirement of the City Charter. It sets forth the long-range aspirations of O'ahu's residents and the strategies to achieve them. It lays the foundation for the CCH's comprehensive planning process that addresses physical, social, cultural, economic, environmental and design objectives to be achieved for the general welfare and prosperity of the people of O'ahu. It identifies the most desirable population distribution and regional development pattern for the island. The relevant objectives and policies of the General Plan regarding the proposed Project were compared against the O'ahu General Plan topic "Housing and Communities", and discussion are provided in Table 15 below.

Table 15: O'ahu General Plan Objectives and Policies for Housing and Communities

City and County of Honolulu O'ahu General Plan (Key: S = Supportive, N/S = Not Supportive, N/A = Not Applicable)		S	N/S	N/A
HOUSING AND COMMUNITIES				
Objective A:	To ensure a balanced mix of housing opportunities and choices for all residents at prices they can afford.			
Policy 1:	Support programs, policies, and strategies that will provide decent and affordable homes for local residents, especially those in the lowest income brackets.	X		
Policy 2:	Streamline approval and permit procedures, in a transparent manner, for housing and other development projects.	X		
Policy 3:	Encourage innovative residential developments that result in lower costs, sustainable use of resources, more efficient use of land and infrastructure, greater convenience and privacy, and a distinct community identity.	X		
Policy 4:	Support and encourage programs to maintain and improve the condition of existing housing.			X

City and County of Honolulu O'ahu General Plan (Key: S = Supportive, N/S = Not Supportive, N/A = Not Applicable)		S	N/S	N/A
HOUSING AND COMMUNITIES				
Policy 5:	Make full use of government programs that provide assistance for low- and moderate-income renters and homebuyers.			X
Policy 6:	Maximize local funding programs available for affordable housing.	X		
Policy 7:	Provide financial and other incentives to encourage the private sector to build homes for low- and moderate-income residents.			X
Policy 8:	Encourage and participate in joint public-private development of low- and moderate-income housing.	X		
Policy 9:	Encourage the replacement of low- and moderate-income housing in areas which are being redeveloped at higher densities.			X
Policy 10:	Promote the design and construction of dwellings which take advantage of O'ahu's year-round moderate climate and use other sustainable design techniques.	X		
Policy 11:	Encourage the construction of affordable homes within established low-density and rural communities by such means as 'ohana units, duplex dwellings, and cluster development that embraces the 'ohana concept by maintaining multi-generational proximity for local families.			X
Policy 12:	Promote higher-density, mixed-use development where appropriate, including rail transit-oriented development, to increase the supply of affordable and market housing in convenient proximity to jobs, schools, shops, and public transit.	X		
Policy 13:	Encourage the production and maintenance of affordable rental housing.	X		
Policy 14:	Encourage the provision of affordable housing designed for the elderly and people with disabilities in locations convenient to critical services and to public transit.			X
Policy 15:	Encourage equitable relationships between landowners and leaseholders, between landlords and tenants, and between condominium developers and owners.			X
Policy 16:	Support collaborative partnerships that work toward immediate solutions to house and service homeless populations and also toward long-term strategies to prevent and eliminate homelessness.			X
Policy 17:	Support programs to address all facets of homelessness, so that every homeless person has a place to stay, along with the infrastructure and support services that are needed.			X
Objective B:	To minimize speculation in land and housing.			
Policy 1:	Encourage the State government to coordinate its urban-area designations with the developmental policies of the City.			X
Policy 2:	Discourage speculation in lands outside of areas planned for urban use, reduce the prevalence of vacant dwelling units, and reduce the use of residential dwelling units for short-term vacation rentals.			X
Policy 3:	Seek public benefits from increases in the value of land owing to City and State developmental policies and decisions.			X

City and County of Honolulu O'ahu General Plan (Key: S = Supportive, N/S = Not Supportive, N/A = Not Applicable)		S	N/S	N/A
HOUSING AND COMMUNITIES				
Policy 4:	Require government-assisted housing to be delivered to qualified purchasers and renters.			X
Policy 5:	Ensure that owners of housing properties, including government-subsidized housing, maintain housing affordability over the long term.			X
Objective C:	To provide residents with a choice of living environments that are reasonably close to employment, schools, recreation, and commercial centers, and that are adequately served by transportation networks and public utilities.			
Policy 1:	Ensure that residential developments offer affordable housing to people of different income levels and to families of various sizes to alleviate the existing condition of overcrowding.	X		
Policy 2:	Encourage the fair distribution of low- and moderate-income housing throughout the island.	X		
Policy 3:	Encourage the co-location of residential development and employment centers with commercial, educational, social, and recreational amenities in the development of desirable communities.	X		
Policy 4:	Encourage residential development in suburban areas where existing roads, utilities, and other community facilities are not being used to capacity, and in urban areas where higher densities may be readily accommodated.	X		
Policy 5:	Support mixed-use development and higher-density redevelopment in areas surrounding rail transit stations.			X
Policy 6:	Discourage residential development in areas where the topography makes construction difficult or hazardous, where sea level rise and flooding are a hazard, and where providing and maintaining roads, utilities, and other facilities would be extremely costly or environmentally damaging.	X		
Policy 7:	Encourage public and private investments in older communities as needed to keep the communities vibrant and livable.			X
Policy 8:	Encourage the military to provide housing for active duty personnel and their families on military bases and in areas turned over to military housing contractors.			X

Discussion: The proposed Project supports the O'ahu General Plan's objectives and policies for housing and communities by providing reasonably priced, safe, sanitary, and livable teacher workforce housing, conveniently located in a desirable residential community in close proximity to retail and recreational amenities, as well as other public facilities and services. To implement, the proposed Project, the Applicant will process "zoning approvals" through the HRS 201H process. The Applicant will also seek to maximize local funding programs available for affordable housing. If fully implemented, the proposed Project will represent a successful example of joint public-private development of low- and moderate-income housing.

The design and construction of the proposed Project will take advantage of O'ahu's year-round moderate climate and use other sustainable design techniques. An important sustainable practice

is to develop higher-density, mixed-use development where appropriate, to increase the supply of housing in convenient proximity to employment, and recreational, educational, and commercial amenities.

The proposed Project is not located where construction will be difficult or hazardous, where SLR and flooding are a hazard, or where providing and maintaining roads, utilities, and other facilities would be extremely costly or environmentally damaging.

5.2.2 Central O‘ahu Sustainable Communities Plan

The CCH’s eight Development Plans/Sustainable Communities Plans set forth a planning framework to implement and accomplish the objectives and policies of the O‘ahu General Plan. Only the plans for the Primary Urban Center (PUC) and ‘Ewa are designated “Development Plans,” with the remainder designated “Sustainable Community Plans,” reflecting the role of the PUC and ‘Ewa DP areas to accommodate the majority of O‘ahu’s future growth.

In March 30, 2021, the CCH adopted the COSCP as one of eight community-oriented plans to guide public policy, investment and decision making through the 2035 planning horizon. The property is located within the COSCP area. The COSCP presents a vision for the region’s future, presenting policies, guidelines and conceptual schemes intended to guide policy for the preparation of more detailed zoning maps, land use regulations, and public and private sector investment decisions. The document serves as a guide to land use and all development projects should be based on the extent to which the Project supports, conforms to, and carries out the purposes of the vision and respective policies and guidelines of the plan. These policies, principles, and guidelines are then implemented through ordinances such as the LUO (zoning code).

According to the COSCP: *“Our most recent projections show that O‘ahu will need almost 79,500 new homes to meet expected population growth between 2010 and 2035. The General Plan, and the Development Plans, and Sustainable Communities Plans adopted by the City Council to implement the General Plan, provide capacity for most new homes to be built either in downtown Honolulu, ‘Ewa, or Central O‘ahu.”*

According to the Urban Land Use Map in the COSCP, the Project site (which is located within MHS) is designated as a “Residential and Low-Density Apartment”. The proposed Project involves the efficient development of 1.975 acres with 95 units, for a density yield of 48.1 units per acre. According to Table 3.3 of COSCP, the proposed project would be categorized as a “Medium-Density Apartment” (25-90/acre). Currently, it is not anticipated that the 5-story project will exceed 60 feet in height.

5.2.3 Land Use Ordinance (LUO)

The Land Use Ordinance, or LUO (ROH Chapter 21), is the CCH’s zoning ordinance. The LUO regulates land use in accordance with adopted land use policies, including the General Plan and Development/Sustainable Communities Plans. The LUO seeks to encourage orderly development and promote and protect public health, safety and welfare through the establishment of land use regulation and zoning districts. The Project site (and the rest of MHS) is currently zoned R-5 (Residential). The purpose of the residential district is to allow for a range of residential densities. The primary use shall be detached residences. Other types of dwellings may also be allowed,

including zero lot line, cluster and common wall housing arrangements. Non-dwelling uses that support and complement residential neighborhood activities shall also be permitted. "Public uses and structures" such as a public high school, are permitted in all zoning districts regulated by the CCH.

Discussion: During the pre-Assessment consultation process, DTS wrote:

> *"A discussion regarding off-street parking and site generated parking demand should be included in the environmental assessment. The Project shall provide on-site bicycle parking that, at a minimum, meets the requirements of Land Use Ordinance, Section 21-6.40."* (Appendix A)

Table 21-6.1 of the LUO provides the minimum off-street parking ratios. The proposed Project would fall in the "Use Category" of "Household Living", where the parking standard is 1 stall per 1,000 square feet of private dwelling or lodging area, not including areas identified in § 21-6.20(b)(2)(A) ("*Common areas and accessory recreation areas in multi-unit dwellings. Lodging, small or large group living, and consulates*…"). Currently, the total floor (minus common areas and accessory recreation areas) is estimated to be 62,860 square feet, which would require parking for 63 cars (or the equivalent of 0.66 stalls per unit). The parking requirement for General Office is one stall per 500 square feet of office space. With a currently proposed 320 square feet of office space, one (1) parking stall would be required. The total LUO required parking for the proposed Project is thus 64 stalls. The Project currently proposes 150 stalls, including 6 ADA, 103 standard, 36 tandem, and 5 visitor stalls.

Per Table 21-6.3 of LUO, Section 21-6.40, the short-term bicycle parking requirement is 1 space for every 10 dwelling or lodging units (95 units/10 = 9.5 or 10 bicycle parking spaces); and the long-term bicycle parking requirement is 1 space for every 2 dwelling or lodging units (95 units/2 = 47.5 bicycle parking spaces. Due to the possibility that many of the residents of the proposed Project may walk to work (at MHS or other nearby places of employment) or catch public transportation from the nearby bus transit station, the Applicant may request for a lower bicycle parking ratio during the HRS 201H process.

During the pre-Assessment consultation process, the DPP wrote:

> *"Compliance with Revised Ordinances of Honolulu (ROH), Chapter 21, the Land Use Ordinance (LUO): The Project site is located in the R-5 District. Therefore, proposed development must comply with development standards applicable to the R-5 District. Project compliance with these standards should be presented and evaluated in the Draft EA…*
>
> *The Draft EA should identify the Project's consistency with the development standards of the R-5 District and other applicable LUO regulations, including but not limited to the following:*
> *• Maximum allowable heights and building area;*
> *• Required yard and height setbacks;*
> *• Parking, loading, and vehicular circulation and maneuvering areas;*
> *• Impervious surface coverage; and*
> *• Landscape screening and parking lot landscaping.*

The Mililani High School Teacher Workforce Housing is considered a multi-unit dwelling in the LUO, which is not a permitted use in the R-5 District. The Draft EA should address how the Project will proceed considering the use is not permitted in this zoning district." (Appendix A)

Per Section 21-3.70-1 of the LUO, within the R-5 Residential (zoning) District, the development standards are enumerated in Table 21-3.2 of the LUO. Under Table 21-3.2, the minimum lot area is 5,000 square feet. The proposed Project site is 86,031 square feet (although it is unknown at this time if the Project area will be subdivided). The proposed Project site will meet the minimum lot size requirement for R-5 zoning districts.

Under Table 21-3.2, current height limit under R-5 zoning is 25 – 30 feet. As currently planned, the 5-story residential project will exceed the height limit. To address this requirement, the Applicant intends to prepare and submit an application for HRS 201H approval.

Table 21-3.2 also stipulates the maximum building area for the project (50% of the zoning lot). Currently the proposed Project site plan shows a combined building area of 23,200 square feet (27% of proposed zoning lot). The proposed Project will meet the maximum building area requirements for R-5 zoning districts.

Per Section 21-3.70-1 of the LUO, the maximum density allowed is a floor area ratio (FAR) of 0.7. As currently planned, the proposed Project will exceed the maximum FAR. The Applicant intends to request an exemption (through the HRS 201H process) to allow a greater FAR.

Under Table 21-3.2, the front yard setback is 10 feet for dwellings and 30 feet for all other uses. It is anticipated that the Project will be setback from Meheula Parkway by approximately 40 feet, if the strip of land between Meheula Parkway and the DOE parcel is included in the Project site. If this strip of land is not included, then the Project may be within the minimum front yard setback, in which case the Applicant may request a 201H exemption from the minimum front yard setback requirement. The side and rear yard setback is 5 feet for dwellings and 15 feet for other uses. It is anticipated that the Project will be setback from its side and rear boundaries by 41 feet and 24 feet, respectively. The proposed Project will meet the minimum front, side and rear yard setback requirements for R-5 zoning districts.

According to Section 21-3.70-1(c)(2) of the LUO regarding height setbacks: (A) Any portion of a structure exceeding 15 feet must be set back from every side and rear buildable area boundary line one foot for each two feet of additional height over 15 feet; and (B) Any portion of a structure exceeding 20 feet must be set back from the front buildable area boundary line one foot for every two feet of additional height over 20 feet. The Applicant intends to request an exemption from height setback requirements to allow for greater flexibility.

All parking will be provided off of a looping driveway within the site. Parking will be provided both covered by the residential building above and uncovered where the drive aisle loops around the site. Yards will be landscaped with screening elements as well as canopy trees to provide shade to the overall site and parking areas. A y-configured fire truck turnaround will be provided at the top of the entry driveway ramp. The Project is not currently planning to deviate from the surface parking lot landscaping and screening requirements per LUO Section 21-6.80(a)(b).

Per Section 21-3.70-1(c)(3)(G), the impervious surface area of a zoning lot must not exceed 75% of the total zoning lot area. The impervious surface coverage for the Project is anticipated to be 49,267 sf, or approximately 57.27% of the proposed zoning lot area of 86,031 sf.

As noted by DPP, the MHS Teacher Workforce Housing may be considered a multi-unit dwelling as defined by the LUO, which is not a permitted use in the R-5 District. As part of the HRS 201H application process, the Applicant intends to request an exemption to allow the multi-unit dwelling use in the R-5 District. It should be noted that the Project site is surrounded by uses other than single-family homes, such as the LDS Church across the street to the south, a U.S. Post Office to the west, and MHS to the north and east.

During the pre-Assessment consultation process, the DPP also requested:

> *"Other Permits and Approvals: The Draft EA should identify what other permits are likely to be required and what those permits are addressing . For example, if the Project comes in as a 201 H project the Draft EA should disclose what exemptions the Project will be requesting."* (Appendix A)

A list of what other permits and land use approvals may be required can be found in Table 16 of Section 5.3 below. As previously noted, the Applicant intends to submit an application for HRS 201H approval. Possible 201H exemption requests include:

- Permitted uses: To allow Multi-Unit Dwellings, General Office, Meeting Facilities (Small and Medium), and Dog Park
- Maximum FAR
- Maximum building height
- Height setback
- Front yard setback
- EV-ready parking stalls
- Off-street loading
- Bicycle parking
- Surface parking setback
- Park dedication
- Trenching Permit Fees
- Building Permit Plan Review Fee
- Building Permit Fees
- Special Assignment Inspection Fee
- Stormwater Quality Review Fee
- Erosion and Sediment Control Plan Review Fee
- Grading, Grubbing, and Stockpiling Permit Fees
- Wastewater System Facility Charge
- Private Storm Drain Connection License Fee
- Fire Department Plan Review Fee
- BWS Water System Facility Charge
- BWS Water Meter Charge

5.2.4 Special Management Area

The CCH has designated the shoreline and certain inland areas of O'ahu as being within the Special Management Area (SMA). The SMA areas are designated sensitive environments that are protected in accordance with the State's CZM policies, as set forth in ROH Chapter 25. The Project site is located well outside of the SMA.

5.3 LIST OF REQUIRED PERMITS AND APPROVALS

Anticipated permits and approvals that may be required are outlined in Table 16 below. During the pre-Assessment consultation process, DTS wrote:

> *"A street usage permit from the DTS should be obtained for any construction-related work that may require the temporary closure of any traffic lane, sidewalk, bicycle lane, or pedestrian mall on a City street."* (Appendix A)

Table 16: Required Permits and Approvals

AGENCY	PERMIT/APPROVAL
State of Hawai'i	
Department of Health	• Dust Control Plan • Noise Permit (if necessary) • National Pollutant Discharge Elimination System (NPDES) Permit
Department of Land and Natural Resources, Historic Preservation Division	• HRS 6E Review
Department of Transportation	• Permit to Perform Work Upon State Highways • Permit for the Occupancy and Use of State Highways • Permit to Operate or Transport Oversize and/or Overweight Vehicles and Loads Over State Highways (if necessary)
Hawai'i Housing Finance & Development Corporation	• HRS 201H Approval
City and County of Honolulu	
Department of Planning and Permitting	• Grading, Grubbing, and Stockpiling Permits • Occupancy Permit • Building Permit (electrical, plumbing, civil) • Site Development Master Application for Sewer Connection • Storm Drain Connection License (if necessary) • Storm Water Quality Strategic Plan • Rules Relating to Water Quality and Storm Drainage Standards Compliance
Department of Transportation Services	• Street Usage Permit

(This page intentionally left blank.)

6.0 ALTERNATIVES

During the pre-Assessment consultation process, DPP wrote:

> *"Alternatives: The Draft EA must include potential development alternatives and provide reasons why the proposed action is the most practical approach."* (Appendix A)

In compliance with the provisions of HAR Section 11-200.1-18(d)(7) relating to Environmental Assessments, an environmental assessment must discuss potential alternatives to the proposed action which could attain the objectives of the action in sufficient detail to explain why they were rejected.

6.1 NO ACTION

The no-action alternative is no change to the Project site (remaining as open space and lawn). While this alternative could alter adverse impacts, it would not meet the objective of the Project as stated in Section 2.2 of this EA:

> *"The objective of this project is to offer new multifamily rental unit options at affordable rents, prioritizing Hawai'i's teachers and DOE employees."*

Under the "No Action" alternative, the proposed affordable residential project would not be constructed. Without the proposed Project, DOE may continue having difficulty attracting and retaining teachers at public schools due to the high cost of housing.

6.2 OTHER SITES ON CAMPUS

On December 15, 2023, the SFA released a request for proposal (RFP) for the MHS Teacher Workforce Housing Project. The RFP identified three possible sites for the Project: "Preferred Site," "Site 2," and "Site 3".

6.2.1 Site 2

Site 2 can best be described as land including TMK 9-5-001-083 (used for drainage), which separates the two main parcels that comprise MHS (9-5-001-054 and 9-5-001-055). Development of Site 2 would pose a flooding risk to residents and property. As a result, Alternative Site 2 was rejected as a possible alternative.

6.2.2 Site 3

Site 3 is located at the northwestern corner of the campus at the intersection of Kīpapa Drive and Hoʻokelewaʻa Street. Although this site is conveniently located to Mililani Waena Elementary School and the Town Center of Mililani (the regional shopping center), Site 3 is occupied by numerous portable classroom buildings that would require the relocation elsewhere on campus, or the consolidation of the classrooms into a new multi-story classroom building elsewhere on campus. Development of the proposed Teacher's Workforce Housing project on Site 3 would

result in delays as the existing classrooms on Site 3 would need to be relocated elsewhere on campus.

6.2.3 Preferred Site

The RFP's "Preferred Site" was located on approximately 3 acres in the southern portion of the campus bounded by the track & field, baseball field and tennis courts. (The proposed teacher workforce housing 1.975-acre Project site fits well within the "Preferred Site".) The "Preferred Site" was originally rejected by the Applicant due the distance of the site from the municipal sewer collection system. It had been determined that the cost of connecting to the municipal sewer collection system would render the proposed teacher workforce housing project economically unfeasible.

6.3 OTHER SITE ON CAMPUS – NORTHEAST CORNER

Since the RFP "Preferred Site" was initially determined to be too expensive to build, the Applicant proposed building the proposed Project on the northeastern corner of the campus (at the intersection of Meheula Parkway and Hoʻokelewaʻa Street). While similar to Site 3 in terms of proximity to Mililani Waena Elementary School and the Town Center of Mililani, the northeast corner of the campus is relatively vacant (with little in the way of built facilities needing relocation or replacement elsewhere on campus). Additionally, connecting to the municipal sewer collection system would be relatively inexpensive from the northeast corner of the campus.

However, the MHS Administration was opposed to the idea of interrupting the agricultural activities within the Northeast Corner of the campus, so the Applicant selected the RFP's "Preferred Site." A smaller land area within the "Preferred Site" is the proposed Project site for the Teacher Workforce Housing.

7.0 FINDINGS, SUPPORTING REASONS, AND DETERMINATION

To determine whether the proposed Project may have a significant impact on the physical and human environment, all phases and expected consequences of the proposed Project have been evaluated, including potential primary, secondary, short-range, long-range, and cumulative impacts. Based on this evaluation, the Approving Agency (SFA) anticipates issuing a Finding of No Significant Impact (FONSI) for the Project. The supporting rationale for this anticipated finding is presented in this chapter.

7.1 PROBABLE IMPACT, INCLUDING CUMULATIVE IMPACTS

During the pre-Assessment consultation process, the Chair of NB25 wrote:

"…Alternatives & Cumulative Effects

- *Address cumulative effects with other foreseeable Central O'ahu projects (traffic, infrastructure, and MHS campus projects to include but not limited to: parking lot relocation, pedestrian and ADA access to the 5,000 seat stadium, walkway realignments, covered play courts, and portable classroom replacements)."*

During the Draft EA public comment period, the Chair of NB25 wrote a similar comment:

"…Alternatives & Cumulative Effects…

- *Address cumulative effects with other foreseeable Central O'ahu projects (traffic, infrastructure, and MHS campus projects)."* (Appendix L)

Cumulative impacts are impacts on the environment that result from the action when added to other past, present, and foreseeable future actions by other agencies or persons. Examples of possible cumulative impacts of a proposed action could be those related to increased traffic and parking during off-peak hours of the day.

The only known projects proposed in the Project area include: the proposed DOE covered play court, and a crosswalk planned at the intersection of Hikikaulia Street and Meheula Parkway (and is currently in the design and planning phase by the DTS). The proposed Project has been designed to be setback 30 feet from the DOE covered play court. A crosswalk at the intersection of Hikikaulia Street and Meheula Parkway will not only benefit students of MHS, but residents of the proposed Project as well. No portable classrooms will need to be demolished as part of the proposed Project. The proposed Project involves the demolition of the existing 48-stall parking lot and replacing it with a new apartment building (with two wings), parking and open space. SFA is working with MHS and DOE to determine a location and design to replace all of the displaced parking stalls. The proposed Project will result in an increase of approximately 266 new residents[2] living in the area, although it is possible some of the new residents are already living in Mililani. Therefore, the Project will not significantly contribute to impacts resulting from an increase in resident (or visitor) population, such as increased demand on infrastructure, increased peak-hour traffic, increased demand on public services or facilities, or an increased

[2] Based on an average household size of 2.8 residents per household.

demand on natural resources in the vicinity of the Project Site. Socio-economic impacts resulting from the proposed Project are anticipated to be beneficial. Construction will generate excise taxes, employment, income taxes, and indirect economic opportunities.

7.2 SIGNIFICANCE CRITERIA

Based upon the previous information presented in this document the proposed permitting and construction of the Project will likely have no significant environmental impacts. This determination is based upon the thirteen (13) Significance Criteria outlined in HRS Chapter 343, as amended and HAR Title 11 Chapter 200.1-13 1996, discussed below.

(1) Irrevocably commit a natural, cultural, or historic resource;

The Project site contains a parking lot and lawn; and does not contain a natural, cultural or historic resource. There the proposed Project is not anticipated to irrevocably commit a natural, cultural, or historic resource.

(2) Curtail the range of beneficial uses of the environment;

The proposed Project will not curtail the range of beneficial uses of the environment as the Site does not provide a natural, cultural, or historic resource.

(3) Conflict with the State's environmental policies or long-term environmental goals established by law;

The Environmental Policies enumerated in HRS Chapter 344 promote conservation of natural resources, and an enhanced quality of life for all citizens. As detailed in Section 5.1.5 above, the proposed Project does not conflict with the State's long-term environmental policies, goals, or guidelines as expressed in HRS Chapter 344, and will not significantly impact natural resources due to the fact that the Site is already developed with a parking lot and lawn and has been subject to intense human utilization, including pineapple plantation uses before Mililani Town was developed.

(4) Have a substantial adverse effect on the economic welfare, social welfare, or cultural practices of the community and State;

The relatively small scale of the proposed Project (yielding approximately 280 residents) should not have a substantial adverse effect on the economic welfare, social welfare, or cultural practices of the community (one percent of the population of Mililani) and State (0.01% of the population of the State[3]).

(5) Have a substantial adverse effect on public health;

The potential temporary impacts related to noise, air or water quality during construction will be addressed through construction management practices in compliance with Federal, State and County requirements. The Applicant's practice to build sustainably will help to ensure that the

[3] On July 1, 2024, the resident population for the State of Hawai'i was 1,446,146. https://census.hawaii.gov/main/2024-state-pe/

proposed Project will not negatively affect public health. The Project site does not abut residential areas, hospitals or medical centers.

(6) Involve adverse secondary impacts, such as population changes or effects on public facilities;

The relatively small scale of the proposed Project (yielding approximately 280 residents) should not present substantial adverse secondary impacts, such as population changes or effects on public facilities.

(7) Involve a substantial degradation of environmental quality;

No substantial degradation to noise, air or water quality is anticipated. The Applicant has committed itself to a development practice of environmental sustainability, especially in regard to energy use.

(8) Be individually limited but cumulatively have substantial adverse effect upon the environment, or involves a commitment for larger actions;

The proposed residential Project is relatively modest in size (1.975 acres and fewer than 100 proposed units). Mililani Town was fully built out in 2008[4], so it is unlikely that the proposed Project involves a commitment for larger actions (such as new large single-family subdivisions or conversion of single-family home lots and low-density apartments to high rise apartment buildings).

(9) Have a substantial adverse effect on a rare, threatened, or endangered species, or its habitat;

The proposed Project will occupy a site that is already committed to a 48-stall parking lot within the MHS development; moreover, due to intense human utilization of MHS, the proposed Project is not anticipated to have any impact on endangered flora or faunal species. The site contains no habitat for rare, threatened or endangered plant or animal species or their respective habitats.

(10) Have a substantial adverse effect on air or water quality or ambient noise levels;

Air Quality: It is anticipated that no State or Federal air quality standards will be violated during or after the construction of the proposed Project.

Water Quality: It is also anticipated that no State or Federal water quality standards should be violated during or after the construction of the Project.

Ambient Noise Levels: Construction activities for the proposed Project will inevitably create temporary noise impacts. The Applicant's contractor may employ mitigation measures to minimize those temporary noise impacts including the use of mufflers and implementing construction curfew periods. Pursuant to HAR Chapter 11-46, the Project activities will comply with all community noise controls.

(11) Have a substantial adverse effect on or be likely to suffer damage by being located in an environmentally sensitive area such as a flood plain, tsunami zone, sea level rise exposure

[4] Honolulu Star-Bulletin, *"Mililani closes its last door,"* November 15, 2008. https://archives.starbulletin.com/content/20081115_mililani_closes_its_last_door.html

area, beach, erosion-prone area, geologically hazardous land, estuary, fresh water, or coastal waters;

The Project site does not lie in an environmentally sensitive area such as a Sea Level Rise Exposure Area (SLR-XA), beach, erosion-prone area, estuary, freshwater or coastal waters. Likewise, the Project is not anticipated to have any impact on any natural hazard conditions. As shown on Figure 11: Flood Insurance Rate Map, the Project site is located within the Flood Hazard Zone D. Zone D indicates areas with a potentially moderate to high risk of flooding, but the probability has not been determined. Although some federally backed lenders may still require it, in Zone D, there are no mandatory flood insurance requirements. Also, there are no minimum building requirements by FEMA. However, Zone D indicates that there is a risk of flooding; the level of risk is just unknown. Therefore, the Project site is not subject to ROH Chapter 21A, Flood Hazard Areas.

(12) Have a substantial adverse effect on scenic vistas and viewplanes, during day or night, identified in county or state plans or studies; or,

The COSCP depicts a portion of Meheula Parkway fronting MHS as a "Landscaped Boulevard/Greenway". The proposed Project will not adversely affect the Monkeypod trees that line Meheula Parkway fronting the Project site.

(13) Require substantial energy consumption or emit substantial greenhouse gases.

The proposed Project will not require substantial energy consumption nor produce substantial greenhouse gases.

7.3 DETERMINATION

On the basis of impacts and mitigation measures examined in this document and analyzed under the above criteria, it is determined that the proposed Project will not have a significant effect on the physical or human environments. Pursuant to HRS Chapter 343, the approving agency, SFA issues a FONSI.

8.0 REFERENCES

City and County of Honolulu Department of Emergency Management. (n.d.). *Tsunami Evacuation Zones*. Retrieved October 2021, from https://cchnl.maps.arcgis.com/apps/webappviewer/index.html?id=39a9e07068a14d01a85b437adcf50beb

Coleman, H. (2014). *Ke Kula Wela La o Pahua: The Cultural and Historical Significance of Pahua Heiau, Maunalua, O'ahu.* Honolulu: Office of Hawaiian Affairs.

Department of Transportation Services. (2019). *Oahu Bike Plan 2019 Update.* City and County of Honolulu. Retrieved from https://www.honolulu.gov/rep/site/dts/bike_docs/OBP_Final_2019_Oahu_Bike_Plan_Update.pdf

Hawai'i Climate Change Mitigation and Adaptation Commission. (2017). *Hawai'i Sea Level Rise Vulnerability and Adaptation Report.* Retrieved from Prepared by Tetra Tech, Inc. and the State of Hawai'i Department of Land and Natural Resources, Office of Conservation and Coastal Lands, under the State of Hawai'i Department of Land and Natural Resources Contract No: 64064: https://climateadaptation.hawaii.gov/wp-content/uploads/2017/12/SLR-Report_Dec2017.pdf

Hawaii Civil Beat. (2011, March 11). Retrieved September 18, 2015 , from A History of Tsunamis in Hawaii: http://www.civilbeat.com/2011/03/9558-a-history-of-tsunamis-in-hawaii/

Hawaiian Volcano Observatory. (2015). *Earthquakes in Hawaii: What You Need to Know.*

Honolulu Board of Water Supply, Townscape, Inc., and the City and County of Honolulu Department of Planning and Permitting. (2009). *Wai'anae Watershed Management Plan, Final Plan.* Honolulu, HI. Retrieved from https://www.boardofwatersupply.com/bws/media/files/waianae-wmp-final-report-full-2009-08.pdf

Jordan, N., & Allen, J. (2010). *Revised Draft Archaeological Assessment and Section 106 Review, Hawai'i Kai Marina and Channel Maintenance Dredging, Manualua Ahupua'a, Kona District, O'ahu, Hawai'i.* Honolulu: International Archaeological Research Institute, Inc.

McAllister, J. G. (1933). *Archaeology on Oahu.* Honolulu: Bernice Pauahi Bishop Museum Bulletin 104, Bishop Museum Press.

National Oceanic and Atmospheric Administration (NOAA) National Hurricane Center (NHC). (n.d.). *National Storm Surge Hazard Maps*. Retrieved October 2021, from https://arcg.is/0rfPmC

NOAA. (n.d.). *Storm Surge Overview*. Retrieved from National Hurricane Center and Central Pacific Hurricane Center: https://www.nhc.noaa.gov/surge/

Office of Hawaiian Affairs. (2018). *Archaeological Preservation Plan Pahua Heiau.* Honolulu: Prepared by Nohopapa Hawai‘i.

PacIOOS, Sea Level Rise: Hawai‘i Sea Level Rise Viewer. (2019). Retrieved from Pacific Islands Ocean Observing System (PacIOOS): https://www.pacioos.hawaii.edu/shoreline/slr-hawaii/

State of Hawai‘i Department of Health, Safe Drinking Water Branch. (n.d.). *Underground Injection Control Program*. Retrieved October 13, 2021, from https://health.hawaii.gov/sdwb/underground-injection-control-program/

U.S. Fish and Wildlife Service. (n.d.). *National Wetlands Inventory*. Retrieved October 2021, from Surface Waters and Wetlands: https://www.fws.gov/wetlands/data/mapper.html

USFWS. (n.d.). *Wetlands Mapper*. Retrieved October 2021, from National Wetlands Inventory: https://www.fws.gov/wetlands/data/mapper.html

Appendix A

Pre-Assessment Consultation Comments & Responses

(This page intentionally left blank.)

STATE OF HAWAIʻI
OFFICE OF PLANNING
& SUSTAINABLE DEVELOPMENT

JOSH GREEN, M.D.
GOVERNOR

SYLVIA LUKE
LT. GOVERNOR

MARY ALICE EVANS
DIRECTOR

235 South Beretania Street, 6th Floor, Honolulu, Hawaiʻi 96813
Mailing Address: P.O. Box 2359, Honolulu, Hawaiʻi 96804

Telephone: (808) 587-2846
Fax: (808) 587-2824
Web: https://planning.hawaii.gov/

Coastal Zone Management Program

Environmental Review Program

Land Use Commission

Land Use Division

Special Plans Branch

State Transit-Oriented Development

Statewide Geographic Information System

Statewide Sustainability Branch

DTS 202509221527NA
Transmitted via email

September 29, 2025

Mr. Greg Nakai
PBR HAWAII & Associates, Inc.
1001 Bishop Street, Suite 650
Honolulu, Hawaiʻi 96813-3484

Dear Mr. Nakai:

Subject: Pre-Assessment for a Draft Environmental Assessment
Mililani High School Teacher Workforce Housing Project
Mililani, Oahu, Hawaiʻi
TMK: (1) 9-5-001:054 (por.)

The Office of Planning and Sustainable Development (OPSD) received the Environmental Assessment Early Consultation letter requesting comments for the preparation of a Draft Environmental Assessment (EA) for the Mililani High School Teacher Workforce Housing Project.

OPSD anticipates that the Draft EA will discuss the Proposed Action with respect to the policies and objectives in Hawaiʻi Revised Statutes (HRS) Chapters 205A and 226, the Coastal Zone Management and Hawaiʻi State Planning Act, respectively. As the 2050 Sustainability Plan was prepared to guide the attainment of sustainability and resilience goals and objectives for the State contained in HRS Chapter 226, OPSD recommends the DEA generally discuss the technologies and best practices and other mitigation measures for the Proposed Action that would advance implementation of the Recommended Actions in the 2021-2030 Focus Areas on pages 100-107 of the *Hawaiʻi 2050 Sustainability Plan*.

We look forward to reviewing the environmental assessment for the project. If you have any questions regarding this comment letter, please contact Seiji Ogawa, Land Use Division, Seiji.ogawa@hawaii.gov or (808) 587-2898.

Mahalo,

Mary Alice Evans

Mary Alice Evans
Director

PBR HAWAII
& ASSOCIATES, INC.

KIMI MIKAMI YUEN, LEED® AP BD+C
President / Chairperson

VINCENT SHIGEKUNI
Executive Vice-President / Principal

GRANT T. MURAKAMI, AICP, LEED® AP BD+C
Executive Vice-President / Principal

CATIE CULLISON, AICP
Senior Vice-President / Principal

TOM SCHNELL, AICP
Vice-President / Principal

MARC SHIMATSU, PLA, ASLA
Principal

RAYMOND T. HIGA, PLA, ASLA
Associate Principal

DACHENG DONG, LEED® AP
Associate Principal

NATHALIE RAZO
Associate Principal

ANN MIKIKO BOUSLOG, PhD
Director of Land Economics & Real Estate

RAMSAY R. M. TAUM
Cultural Sustainability Planner

ETSUYO KILA
Senior Associate

GREG NAKAI
Senior Associate

BRADLEY FURUYA, AICP
Associate

C.R. 'IMIPONO WICHMAN
Associate

THERESA DEAN
Associate

R. STAN DUNCAN, PLA, ASLA
Chairman Emeritus

RUSSELL Y. J. CHUNG, PLA, FASLA
Principal Emeritus

THOMAS S. WITTEN, FASLA
Principal Emeritus

W. FRANK BRANDT, FASLA
Founding Partner

January 15, 2026

Ms. Mary Alice Evans
Director
State of Hawai'i
Office of Planning & Sustainable Development
P.O. Box 2359
Honolulu, HI 96804

Attn: Seiji Ogawa, Land Use Division

SUBJECT: PRE-ASSESSMENT CONSULTATION FOR A HRS CHAPTER 343 ENVIRONMENTAL ASSESSMENT – MILILANI HIGH SCHOOL TEACHER WORKFORCE HOUSING PROJECT, MILILANI, O'AHU, PORTIONS OF TAX MAP KEYS (TMKs) 9-5-001: 017 AND 054

Dear Ms. Evans,

Thank you for your letter (reference # DTS 202509221527NA) dated September 29, 2025. As the planning consultant to Pacific Housing Assistance Corporation (PHAC), which is the developer working with the School Facilities Authority (SFA) on the Mililani High School Teacher Workforce Housing Project, we can report that the Draft Environmental Assessment (EA) will include discussions regarding the policies and objectives in Hawai'i Revised Statutes (HRS) Chapters 205A and 226, the Coastal Zone Management and Hawai'i State Planning Acts. The Draft EA will also generally discuss the technologies and best practices and other mitigation measures for the Proposed Action that would advance implementation of the Recommended Actions in the 2021-2030 Focus Areas on pages 100-107 of the Hawai'i 2050 Sustainability Plan.

We value your participation in the environmental review process. Your letter and this response will be reproduced in the forthcoming Draft EA.

Sincerely,

PBR HAWAII

Greg Nakai
Senior Associate

cc: Lacey Shimabukuro, PHAC
Karen Arakawa, PHAC

1001 Bishop Street, Suite 650
Honolulu, Hawai'i 96813-3484
Tel: (808) 521-5631
Fax: (808) 523-1402
E-mail: sysadmin@pbrhawaii.com

printed on recycled paper

JOSH GREEN, M.D.
GOVERNOR
KE KIA'ĀINA

STEPHEN F. LOGAN
MAJOR GENERAL
ADJUTANT GENERAL
KA 'AKUKANA KENELALA

PHILLIP L. MALLORY III
BRIGADIER GENERAL
DEPUTY ADJUTANT GENERAL
KA HOPE 'AKUKANA KENELALA

STATE OF HAWAI'I
KA MOKU'ĀINA O HAWAI'I
DEPARTMENT OF DEFENSE
KA 'OIHANA PILI KAUA
OFFICE OF THE ADJUTANT GENERAL
3949 DIAMOND HEAD ROAD
HONOLULU, HAWAI'I 96816-4495

October 9, 2025

PBR HAWAII & Associates, Inc.
Attn: Greg Nakai
1001 Bishop Street, Suite 650
Honolulu, HI 96813-3484
Email: gnakai@pbrhawaii.com

SUBJECT: Pre-Assessment Consultation for Environmental Assessment for
Mililani High School Teacher Workforce Housing Project
TMK: (1) 9-5-001:054
Mililani, Oahu, Hawai'i

Aloha Mr. Nakai:

Thank you for your letter dated September 5, 2025, regarding the above subject project. The State of Hawai'i, Department of Defense has no comments to offer at this time.

Should there be any questions, please contact Major Randall Duldulao at 808-369-3487 or randall.s.duldulao@hawaii.gov.

Best Wishes,

Shao Yu Lee, R.A.
Major, Hawai'i National Guard
Chief Engineering Officer

PBR HAWAII
& ASSOCIATES, INC.

KIMI MIKAMI YUEN, LEED® AP BD+C
President / Chairperson

VINCENT SHIGEKUNI
Executive Vice-President / Principal

GRANT T. MURAKAMI, AICP, LEED® AP BD+C
Executive Vice-President / Principal

CATIE CULLISON, AICP
Senior Vice-President / Principal

TOM SCHNELL, AICP
Vice-President / Principal

MARC SHIMATSU, PLA, ASLA
Vice-President / Principal

RAYMOND T. HIGA, PLA, ASLA
Associate Principal

DACHENG DONG, LEED® AP
Associate Principal

NATHALIE RAZO
Associate Principal

ANN MIKIKO BOUSLOG, PhD
Director of Land Economics & Real Estate

RAMSAY R. M. TAUM
Cultural Sustainability Planner

ETSUYO KILA
Senior Associate

GREG NAKAI
Senior Associate

BRADLEY FURUYA, AICP
Associate

C.R. 'IMIPONO WICHMAN
Associate

THERESA DEAN
Associate

R. STAN DUNCAN, PLA, ASLA
Chairman Emeritus

RUSSELL Y. J. CHUNG, PLA, FASLA
Principal Emeritus

THOMAS S. WITTEN, FASLA
Principal Emeritus

W. FRANK BRANDT, FASLA
Founding Partner

January 15, 2026

Shao Yu Lee, R.A.
Major, Hawai'i National Guard
Chief Engineering Officer
State of Hawai'i
Department of Defense
3949 Diamond Head Road
Honolulu, HI 96816-4495

Attn: Major Randall Duldulao

SUBJECT: PRE-ASSESSMENT CONSULTATION FOR A HRS CHAPTER 343 ENVIRONMENTAL ASSESSMENT – MILILANI HIGH SCHOOL TEACHER WORKFORCE HOUSING PROJECT, MILILANI, O'AHU, PORTIONS OF TAX MAP KEYS (TMKs) 9-5-001: 017 AND 054

Dear Major Lee,

Thank you for your Department's letter dated October 9, 2025 regarding the subject Project. As the planning consultant to Pacific Housing Assistance Corporation (PHAC), which is the developer working with the School Facilities Authority (SFA) on the Mililani High School Teacher Workforce Housing Project, we acknowledge that your agency has no comments to offer at this time.

We value your participation in the environmental review process. Your Department's letter and our response will be reproduced in the forthcoming Draft Environmental Assessment (EA).

Sincerely,

PBR HAWAII

Greg Nakai
Senior Associate

cc: Ms. Lacey Shimabukuro, PHAC
Ms. Karen Arakawa, PHAC

1001 Bishop Street, Suite 650
Honolulu, Hawai'i 96813-3484
Tel: (808) 521-5631
Fax: (808) 523-1402
E-mail: sysadmin@pbrhawaii.com

printed on recycled paper

JOSH GREEN, M.D.
GOVERNOR

KEITH T. HAYASHI
SUPERINTENDENT

STATE OF HAWAIʻI
DEPARTMENT OF EDUCATION
KA ʻOIHANA HOʻONAʻAUAO
P.O. BOX 2360
HONOLULU, HAWAIʻI 96804

OFFICE OF FACILITIES AND OPERATIONS

October 3, 2025

Mr. Greg Nakai
PBR Hawaii & Associates, Inc.
1001 Bishop Street, Suite 650
Honolulu, HI 96813

Re: Pre-Assessment Consultation for a Hawaii Revised Statutes Chapter 343 Environmental Assessment - Mililani High School Teacher Workforce Housing Project, Mililani, Oahu Tax Map Key No.: 9-5-001:054 (por)

Dear Mr. Nakai:

Thank you for your letter dated September 5, 2025 and the opportunity to review and comment on the Pre-Assessment Consultation for a Hawaii Revised Statutes Chapter 343 Assessment for the Mililani High School Teacher Workforce Housing Project (Project). At this time, the Hawaii State Department of Education (Department) offers the following comments.

The Department appreciates Pacific Housing Assistance Corporation's (Applicant) offer to provide affordable housing options to Hawaii's education workforce. Based on the information provided, the Department understands that the Project will be developed on the southwest portion of the Mililani High School campus and believes that there will be direct impacts on school operations.

The Department looks forward to the opportunity to review and provide comments on specific details that it expects to be included in the Draft Environmental Assessment. Specifically, the Department looks forward to reviewing and providing comments over the Project's impact on school operations and security, pedestrian and vehicular transportation, and the future expansion of school facilities. The Applicant should also be aware that the Department has initiated a capital improvements project for a covered tennis court project, which is currently in design and is directly adjacent to the proposed site of the Project.

The Department also encourages the Applicant to actively engage the Mililani community through its neighborhood boards and other community meetings.

Should you have any questions, please contact Cori China, School Lands and Facilities Specialist of the Facilities Development Branch, Planning Section, at (808) 784-5080 or via email at cori.china@k12.hi.us.

We appreciate the opportunity to comment.

Sincerely,

Roy Ikeda
Acting Public Works Manager
Planning Section

RI:cc
c: Ernest Muh, Complex Area Superintendent, Leilehua-Mililani-Waialua Complex Area
Facilities Development Branch

PBR HAWAII
& ASSOCIATES, INC.

KIMI MIKAMI YUEN, LEED® AP BD+C
President / Chairperson

VINCENT SHIGEKUNI
Executive Vice-President / Principal

GRANT T. MURAKAMI, AICP, LEED® AP BD+C
Executive Vice-President / Principal

CATIE CULLISON, AICP
Senior Vice-President / Principal

TOM SCHNELL, AICP
Vice-President / Principal

MARC SHIMATSU, PLA, ASLA
Principal

RAYMOND T. HIGA, PLA, ASLA
Associate Principal

DACHENG DONG, LEED® AP
Associate Principal

NATHALIE RAZO
Associate Principal

ANN MIKIKO BOUSLOG, PhD
Director of Land Economics & Real Estate

RAMSAY R. M. TAUM
Cultural Sustainability Planner

ETSUYO KILA
Senior Associate

GREG NAKAI
Senior Associate

BRADLEY FURUYA, AICP
Associate

C.R. 'IMIPONO WICHMAN
Associate

THERESA DEAN
Associate

R. STAN DUNCAN, PLA, ASLA
Chairman Emeritus

RUSSELL Y. J. CHUNG, PLA, FASLA
Principal Emeritus

THOMAS S. WITTEN, FASLA
Principal Emeritus

W. FRANK BRANDT, FASLA
Founding Partner

January 15, 2026

Mr. Roy Ikeda
Acting Public Works Manager
Planning Section
Office of Facilities and Operations
State of Hawai'i
Department of Education
P.O. Box 2360
Honolulu, HI 96804

Attn: Cori China, School Lands and Facilities Specialist

SUBJECT: PRE-ASSESSMENT CONSULTATION FOR A HRS CHAPTER 343 ENVIRONMENTAL ASSESSMENT – MILILANI HIGH SCHOOL TEACHER WORKFORCE HOUSING PROJECT, MILILANI, O'AHU, PORTIONS OF TAX MAP KEYS (TMKs) 9-5-001: 017 AND 054

Dear Mr. Ikeda,

Thank you for your letter dated October 3, 2025, regarding the subject Project. As the planning consultant to Pacific Housing Assistance Corporation (PHAC), which is the developer working with the School Facilities Authority (SFA) on the Mililani High School Teacher Workforce Housing Project, as suggested, we will include in the Draft Environmental Assessment (EA) discussions on the Project's impact on school operations and security, pedestrian and vehicular transportation, and the future expansion of school facilities (including a capital improvements project for a covering the tennis court which is directly adjacent to the proposed teachers' workforce housing project).

As encouraged, the Applicant and the SFA have been actively engaging with the Mililani community through its neighborhood boards.

We value your participation in the environmental review process. Your letter and our response will be reproduced in the forthcoming Draft EA.

Sincerely,

PBR HAWAII

Greg Nakai
Senior Associate

cc: Lacey Shimabukuro, PHAC
Karen Arakawa, PHAC

1001 Bishop Street, Suite 650
Honolulu, Hawai'i 96813-3484
Tel: (808) 521-5631
Fax: (808) 523-1402
E-mail: sysadmin@pbrhawaii.com

printed on recycled paper

(This page intentionally left blank.)

From: Morikami, Lori
To: Greg Nakai
Subject: Pre-Assessment Cons for Mililani H.S. Teachers Workforce Housing
Date: Thursday, September 11, 2025 2:05:31 PM
Attachments: LUD-WWB-Standard-Comments-2015.pdf

Warning: Unusual sender <lori.morikami@doh.hawaii.gov>
You don't usually receive emails from this address. Make sure you trust this sender before taking any actions.

Good afternoon Greg,

Please refer to the Standard Land Use Comments attached in pdf for your review.
Should you have any questions, please email the Planning & Design Supervisor, Mark Tomomitsu at mark.tomomitsu@doh.hawaii.gov

Mahalo,
Lori M at WWB on Oahu

P.S. Basically, as this project does not seem to have any wastewater treatment or disposal issues as the property is serviced by the City & County of Honolulu's Sewer Service System, we have no objections or comments to offer at this time.

Mahalo,
Lori Morikami
Planner | Env. Mgmt. Div. | Wastewater Branch (PD)
Hawaii State Department of Health | Ka 'Oihana Olakino
2827 Waimano Home Road Room 207 | Pearl City | Hawaii 96782-1487
Office (808) 586-4294 | Website: https://health.hawaii.gov/wastewater/

CONFIDENTIALITY NOTICE: This mail message (and attachments) is for the sole use of the intended recipient(s). If may contain confidential and/or privileged information. It might also be protected from disclosure under the Hawaii Uniform Information Practice Act (UIPA) or other laws and regulations. Review, use, disclosure, or distribution by unintended recipients is prohibited. If you are not the intended recipient, please contact the sender immediately in a separate e-mail and destroy the original message and any copies.

Wastewater Branch
Standard Comments

August 24, 2015

1. Oahu:

   - The subject project is located in the Critical Wastewater Disposal Area (CWDA) as determined by the Oahu Wastewater Advisory Committee where no new cesspools will be allowed. It is also located in the Pass Zone.

   - The subject project is located in the Critical Wastewater Disposal Area (CWDA) as determined by the Oahu Wastewater Advisory Committee where no new cesspools will be allowed. It is also located in the No Pass Zone where subdivisions are not approved unless connection to the County sewer system is possible.

2. Maui:

   - The subject project is located in the Critical Wastewater Disposal Area (CWDA) as determined by the Maui County Wastewater Advisory Committee where no new cesspools will be allowed.

   - The subject project is located in the Non-Critical Wastewater Disposal Area (CWDA) as determined by the Maui County Wastewater Advisory Committee where new cesspools may be allowed with specific criteria.

   - The subject project is located in the One – Acre Lot Exception Critical Wastewater Disposal Area (CWDA) as determined by the Maui County Wastewater Advisory Committee where new cesspools may be allowed, provided there is at least one-acre of land.

3. Kauai:

   - The subject project is located in the Critical Wastewater Disposal Area (CWDA) as determined by the Kauai County Wastewater Advisory Committee where no new cesspools will be allowed.

4. Hawaii:

   - The subject project is located in the Non-Critical Wastewater Disposal Area (CWDA) as determined by the Hawaii County Wastewater Advisory Committee where new cesspools may be allowed with specific criteria.

   - The subject project is located in the One – Acre Lot Exception Critical Wastewater Disposal Area (CWDA) as determined by the Hawaii County Wastewater Advisory Committee where new cesspools may be allowed, provided there is at least one-acre of land.

   - The subject project is located in the Five – Acre Lot Exception Critical Wastewater Disposal Area (CWDA) as determined by the Hawaii County Wastewater Advisory Committee where new cesspools may be allowed, provided there is at least five-acres of land.

   - The subject project is located in the Critical Wastewater Disposal Area (CWDA) as determined by the Hawaii County Wastewater Advisory Committee where no new cesspools will be allowed.

5. Statewide:

   - As the project will be served by the City & County of Honolulu/ County/ Private sewer system, we have no objections to the development. If available, we highly encourage the developer to work with the City/ County/ Private Wastewater Reuse Facility to utilize recycled water for irrigation and other non-potable water purposes. The use of recycled wastewater should be encouraged and utilized in major common areas such as parks, golf courses and other open spaces or landscaping areas.

   - Wastewater treatment and disposal have not been adequately addressed in the subject document; therefore, we can not offer any substantial comments. If a City/County/Private sewer connection is not available, domestic wastewater generated by the project shall be handled by wastewater systems that comply with our chapter 11-62, Hawaii Administrative Rules.

   - As connection to a City/County/Private sewer system may not possible, we highly recommend the construction and use of individual wastewater treatment systems (IWSs) for each unit/lot serving no more than five (5) bedrooms or bedroom like rooms.

   - At this time, the use of an onsite wastewater system is allowable on this property. However, it should be located outside of 1,000 feet radius from a potable public drinking water well before we shall concur with the subdivision request.

   - Based on the information provided in the subject document, a wastewater treatment plant (WWTP) will be provided for the proposed development. We have no objections to the proposal as long as the WWTP is designed and constructed in accordance with applicable provisions of our chapter 11-62, Hawaii Administrative Rules (HAR), "Wastewater Systems".

- We have a cesspool survey card for the subject project and have attached a copy. The existing cesspool is considered to be "grandfathered" and approved for use. Should a significant modification to the existing dwelling be proposed in the future, the existing cesspool will be required to be upgraded to an individual wastewater system (IWS) such as a septic tank system.

- We have a cesspool survey card for the subject project and have attached a copy. The existing cesspool is considered to be "grandfathered-in". The Department currently does not have any complaints or enforcement case that involves the subject cesspool.

- The use of individual wastewater systems is allowed. The type and number of individual wastewater systems to be used on each lot will be determined by the wastewater rules in effect at the time of building permit application.

- Domestic wastewater will not be generated by the subject project; therefore, we have no comments to provide at this time.

- We do not have any records of a treatment system for the subject property; therefore, we cannot offer any substantial comments at this time.

6. Subdivision Requests:

- The Wastewater Branch does not concur with the subdivision request because a minimum lot size of 10,000 square feet is required in order to utilize individual wastewater systems.

- The properties to be subdivided are less than 10,000 square feet; therefore, we will have to deny this subdivision request.

- The subdivision consists of 50 lots/dwelling units or more with lot sizes that are greater than an acre. The use of individual wastewater systems are allowed under the provisions of Hawaii Administrative Rules (HAR), Chapter 11-62.

- The subdivision is located with 1000' radius of a public drinking water source. The WWB cannot concur with the proposed subdivision unless connection to a public sewer system is available.

- The source of potable water is not shown. Please provide this office with the source of potable water such that we can further review the subdivision request.

- The subdivision consists of less than 50 lots/dwelling units. The use of individual wastewater systems are allowed under the provisions of Hawaii Administrative Rule Chapter 11-62. The type and number of individual wastewater treatment systems to be used on each lot will be determined by the wastewater rules in effect at the time of the building permit.

- The subdivision consists of 50 lots/dwelling units or more. The use of individual wastewater systems are not allowed under the provisions of Hawaii Administrative Rule Chapter 11-62. Please have your engineer submit plans for a wastewater treatment works to the Wastewater Branch.

- Show all proposed existing structures and wastewater disposal systems on the final plot map including setback distances to the newly adjusted property lines and buildings.

- In accordance with Hawaii Revised Statutes 343, an environmental assessment is required for any proposed wastewater treatment unit except for individual wastewater systems or a wastewater treatment system unit serving fewer than fifty single-family dwellings or the equivalent.

7. Other:

- The installation of individual wastewater systems will not be allowed if the design flow for the project exceeds 15,000 gallons per day. Hawaii Administrative Rules (HAR), Chapter 11-62, Wastewater Systems, section 11-62-31.1(2)(B) states that for developments involving buildings other than dwellings, the total wastewater flow of the development shall not exceed 15,000 gallons per day. A wastewater treatment plant will be required to be designed and constructed in accordance with our chapter 11-62, HAR if design flows for the project exceeds 15,000 gallons per day.

- The Wastewater Branch has records for the existing wastewater system(s) that are located on the subject property. Please have your engineer or contractor submit completed cesspool information card(s) identifying the location of all wastewater system(s) and their locations to the existing and proposed adjusted property lines.

- In 1999, EPA promulgated regulations under the Safe Drinking Water Act's Underground Injection Control (UIC) Program required closure of all existing large capacity cesspools (LCC) by April 5, 2005. Under federal regulations, a large capacity cesspool is a cesspool which serves multiple dwellings, or for nonresidential facilities has the capacity to serve 20 or more persons per day. Operation of a large capacity cesspool after this date is a violation of federal regulations and subject to enforcement and fines. If you have any questions about LCC, please contact Kate Rao of EPA at (415) 972-3538, or by email at rao.kate@epamail.epa.gov.

- All wastewater plans must conform to applicable provisions of the Department of Health's Administrative Rules, Chapter 11-62, "Wastewater Systems." We do reserve the right to review the detailed wastewater plans for conformance to applicable rules. Should you have any questions, please contact the Planning & Design Section of the Wastewater Branch at telephone 586-4294.

(This page intentionally left blank.)

PBR HAWAII
& ASSOCIATES, INC.

KIMI MIKAMI YUEN, LEED® AP BD+C
President / Chairperson

VINCENT SHIGEKUNI
Executive Vice-President / Principal

GRANT T. MURAKAMI, AICP, LEED® AP BD+C
Executive Vice-President / Principal

CATIE CULLISON, AICP
Senior Vice-President / Principal

TOM SCHNELL, AICP
Vice-President / Principal

MARC SHIMATSU, PLA, ASLA
Principal

RAYMOND T. HIGA, PLA, ASLA
Associate Principal

DACHENG DONG, LEED® AP
Associate Principal

NATHALIE RAZO
Associate Principal

ANN MIKIKO BOUSLOG, PhD
Director of Land Economics & Real Estate

RAMSAY R. M. TAUM
Cultural Sustainability Planner

ETSUYO KILA
Senior Associate

GREG NAKAI
Senior Associate

BRADLEY FURUYA, AICP
Associate

C.R. 'IMIPONO WICHMAN
Associate

THERESA DEAN
Associate

R. STAN DUNCAN, PLA, ASLA
Chairman Emeritus

RUSSELL Y. J. CHUNG, PLA, FASLA
Principal Emeritus

THOMAS S. WITTEN, FASLA
Principal Emeritus

W. FRANK BRANDT, FASLA
Founding Partner

January 15, 2026

Ms. Lori Morikami, Planner
State of Hawai'i
Department of Health
Environmental Management Division
Wastewater Branch
2827 Waimano Home Road #207
Pearl City, HI 96782-1487

SUBJECT: PRE-ASSESSMENT CONSULTATION FOR A HRS CHAPTER 343 ENVIRONMENTAL ASSESSMENT – MILILANI HIGH SCHOOL TEACHER WORKFORCE HOUSING PROJECT, MILILANI, O'AHU, PORTIONS OF TAX MAP KEYS (TMKs) 9-5-001: 017 AND 054

Dear Ms. Morikami,

Thank you for your email dated September 11, 2025, regarding the subject Project. As the planning consultant to Pacific Housing Assistance Corporation (PHAC), which is the developer working with the School Facilities Authority (SFA) on the Mililani High School Teacher Workforce Housing Project, we acknowledge both the (relevant) Standard Land Use Comments and the comments offered in the email.

We assumed that only a couple of the Wastewater Branch Standard Comments apply to the Project:

- *The subject project is located in the Critical Wastewater Disposal Area (CWDA) as determined by the Oahu Wastewater Advisory Committee where no new cesspools will be allowed. It is also located in the Pass Zone…*
- *As the project will be served by the City & County of Honolulu/ County/ Private sewer system, we have no objections to the development. If available, we highly encourage the developer to work with the City/ County/ Private Wastewater Reuse Facility to utilize recycled water for irrigation and other non-potable water purposes. The use of recycled wastewater should be encouraged and utilized in major common areas such as parks, golf courses and other open spaces or landscaping areas.*

Additionally, your email noted:

> *Basically, as this project does not seem to have any wastewater treatment or disposal issues as the property is serviced by the City & County of Honolulu's Sewer Service System, we have no objections or comments to offer at this time.*

We value your participation in the environmental review process. Your Department's email and our response will be reproduced in the forthcoming Draft Environmental Assessment (EA).

Sincerely,

PBR HAWAII

Greg Nakai
Senior Associate

cc: Lacey Shimabukuro, PHAC
Karen Arakawa, PHAC

1001 Bishop Street, Suite 650
Honolulu, Hawai'i 96813-3484
Tel: (808) 521-5631
Fax: (808) 523-1402
E-mail: sysadmin@pbrhawaii.com

printed on recycled paper

(This page intentionally left blank.)

JOSH GREEN, M.D.
GOVERNOR | KE KIAʻĀINA

SYLVIA LUKE
LIEUTENANT GOVERNOR | KA HOPE KIAʻĀINA

DAWN N. S. CHANG
CHAIRPERSON
BOARD OF LAND AND NATURAL RESOURCES
COMMISSION ON WATER RESOURCE MANAGEMENT

STATE OF HAWAIʻI | KA MOKUʻĀINA ʻO HAWAIʻI
DEPARTMENT OF LAND AND NATURAL RESOURCES
KA ʻOIHANA KUMUWAIWAI ʻĀINA
LAND DIVISION

P.O. BOX 621
HONOLULU, HAWAII 96809

October 6, 2025

PBR Hawaiʻi & Associates, Inc.
Attn: Greg Nakai
1001 Bishop Street, Suite 650
Honolulu, HI 96813

via email: gnakai@pbrhawaii.com

SUBJECT: Pre-Assessment Consultation for an Environmental Assessment, Mililani High School Teacher Workforce Housing Project TMK: (1) 9-5-001:054 (por.), Oʻahu, Hawaiʻi

Dear Mr. Nakai,

Thank you for the opportunity to review and comment on the subject matter. The Land Division of the Department of Land and Natural Resources (DLNR) distributed or made available a copy of your request pertaining to the subject matter to DLNR's Divisions for their review and comments.

Enclosed are comments from the Engineering Division on the subject matter. Should you have any questions, please feel free to contact Dayna Vierra at (808) 587-0423 or email: dayna.k.vierra@hawaii.gov.

Sincerely,

Ian Hirokawa
Acting Land Administrator

Enclosure(s)

JOSH GREEN, M.D.
GOVERNOR | KE KIA'ĀINA

SYLVIA LUKE
LIEUTENANT GOVERNOR | KA HOPE KIA'ĀINA

DAWN N. S. CHANG
CHAIRPERSON
BOARD OF LAND AND NATURAL RESOURCES
COMMISSION ON WATER RESOURCE MANAGEMENT

STATE OF HAWAI'I | KA MOKU'ĀINA 'O HAWAI'I
DEPARTMENT OF LAND AND NATURAL RESOURCES
KA 'OIHANA KUMUWAIWAI 'ĀINA
LAND DIVISION

P.O. BOX 621
HONOLULU, HAWAII 96809

October 14, 2025

PBR Hawai'i & Associates, Inc.
Attn: Greg Nakai
1001 Bishop Street, Suite 650
Honolulu, HI 96813

via email: gnakai@pbrhawaii.com

SUBJECT: Pre-Assessment Consultation for an Environmental Assessment, Mililani High School Teacher Workforce Housing Project TMK: (1) 9-5-001:054 (por.), O'ahu, Hawai'i

Dear Mr. Nakai,

Thank you for the opportunity to review and comment on the subject matter. In addition to our previous comments dated October 6, 2025, enclosed are comments from the Commission on Water Resource Management on the subject matter. Should you have any questions, please feel free to contact Dayna Vierra at (808) 587-0423 or email: dayna.k.vierra@hawaii.gov.

.

Sincerely,

Ian Hirokawa
Acting Land Administrator

Enclosure(s)

PBR HAWAII
& ASSOCIATES, INC.

KIMI MIKAMI YUEN, LEED® AP BD+C
President / Chairperson

VINCENT SHIGEKUNI
Executive Vice-President / Principal

GRANT T. MURAKAMI, AICP, LEED® AP BD+C
Executive Vice-President / Principal

CATIE CULLISON, AICP
Senior Vice-President / Principal

TOM SCHNELL, AICP
Vice-President / Principal

MARC SHIMATSU, PLA, ASLA
Principal

RAYMOND T. HIGA, PLA, ASLA
Associate Principal

DACHENG DONG, LEED® AP
Associate Principal

NATHALIE RAZO
Associate Principal

ANN MIKIKO BOUSLOG, PhD
Director of Land Economics & Real Estate

RAMSAY R. M. TAUM
Cultural Sustainability Planner

ETSUYO KILA
Senior Associate

GREG NAKAI
Senior Associate

BRADLEY FURUYA, AICP
Associate

C.R. 'IMIPONO WICHMAN
Associate

THERESA DEAN
Associate

R. STAN DUNCAN, PLA, ASLA
Chairman Emeritus

RUSSELL Y. J. CHUNG, PLA, FASLA
Principal Emeritus

THOMAS S. WITTEN, FASLA
Principal Emeritus

W. FRANK BRANDT, FASLA
Founding Partner

January 15, 2026

Mr. Ian Hirokawa
Acting Land Administrator
State of Hawai'i
Department of Land and Natural Resources
Land Division
P.O. Box 621
Honolulu, HI 96809

Attn: Dayna Vierra

SUBJECT: PRE-ASSESSMENT CONSULTATION FOR A HRS CHAPTER 343 ENVIRONMENTAL ASSESSMENT – MILILANI HIGH SCHOOL TEACHER WORKFORCE HOUSING PROJECT, MILILANI, O'AHU, PORTIONS OF TAX MAP KEYS (TMKs) 9-5-001: 017 AND 054

Dear Mr. Hirokawa,

Thank you for your letters dated October 6 and October 14, 2025, transmitting memorandums from the Engineering Division (ENG), and the Commission on Water Resource Management (CWRM). Please be assured that we will provide written replies to both parties, respectively.

We value your participation in the environmental review process. Your letters and this response will be reproduced in the forthcoming Draft Environmental Assessment (EA).

Sincerely,

PBR HAWAII

Greg Nakai
Senior Associate

cc: Lacey Shimabukuro, PHAC
Karen Arakawa, PHAC

1001 Bishop Street, Suite 650
Honolulu, Hawai'i 96813-3484
Tel: (808) 521-5631
Fax: (808) 523-1402
E-mail: sysadmin@pbrhawaii.com

printed on recycled paper

(This page intentionally left blank.)

JOSH GREEN, M.D.
GOVERNOR | KE KIA'ĀINA

DAWN N.S. CHANG
CHAIRPERSON

KENNETH S. FINK, M.D., MGA, MPH
AURORA KAGAWA-VIVIANI, PH.D.
WAYNE K. KATAYAMA
LAWRENCE H. MIIKE, M.D., J.D.
HANNAH KIHALANI SPRINGER

CIARA W.K. KAHAHANE
DEPUTY DIRECTOR

STATE OF HAWAI'I | KA MOKU'ĀINA 'O HAWAI'I
DEPARTMENT OF LAND AND NATURAL RESOURCES | KA 'OIHANA KUMUWAIWAI 'ĀINA
COMMISSION ON WATER RESOURCE MANAGEMENT | KE KAHUWAI PONO
P.O. BOX 621
HONOLULU, HAWAII 96809

Oct 6, 2025

REF: RFD.6515.3

TO: Mr. Ian Hirokawa, Acting Administrator
Land Division

FROM: Ciara W.K. Kahahane, Deputy Director
Commission on Water Resource Management

SUBJECT: Mililani High School. Teacher Workforce Housing Project

FILE NO.: RFD.6515.3
TMK NO.: (1) 9-5-001:054

Thank you for the opportunity to review the subject document. The Commission on Water Resource Management (CWRM) is the agency responsible for administering the State Water Code (Code). Under the Code, all waters of the State are held in trust for the benefit of the citizens of the State, therefore all water use is subject to legally protected water rights. CWRM strongly promotes the efficient use of Hawaii's water resources through conservation measures and appropriate resource management. For more information, please refer to the State Water Code, Chapter 174C, Hawaii Revised Statutes, and Hawaii Administrative Rules, Chapters 13-167 to 13-171. These documents are available via the Internet at http://dlnr.hawaii.gov/cwrm.

Our comments related to water resources are checked off below.

- [X] 1. We recommend coordination with the county to incorporate this project into the next update of the county's Water Use and Development Plan (WUDP). Please contact the respective Planning Department and/or Department of Water Supply for further information.
- [ ] 2. We recommend coordination with the Engineering Division of the State of Hawai'i, Department of Land and Natural Resources (DLNR) to incorporate this project into the next update of the State Water Projects Plan (SWPP).
- [ ] 3. We recommend coordination with the State of Hawai'i, Department of Agriculture (HDOA) to incorporate the reclassification of agricultural zoned land and the associated agricultural water demands into the State's Agricultural Water Use and Development Plan (AWUDP). Please contact the HDOA for more information at https://hdoa.hawaii.gov/contact/.
- [X] 4. We recommend that water efficient fixtures be installed and water efficient practices implemented throughout the project to reduce the increased demand on the area's freshwater resources. Reducing the water usage of a home or building may earn credit towards Leadership in Energy and Environmental Design (LEED) certification. More information on LEED certification is available at http://www.usgbc.org/leed. A listing of fixtures certified by the EAP as having high water efficiency can be found at http://www.epa.gov/watersense.
- [X] 5. We recommend the use of best management practices (BMP) for stormwater management to minimize the impact of the project on the existing area's hydrology while maintaining on-site infiltration and preventing polluted runoff from storm events. Stormwater management BMPs may earn credit toward LEED certification. More information on stormwater BMPs can be found at http://planning.hawaii.gov/czm/initiatives/low-impact-development/.
- [X] 6. We recommend the use of alternative water sources, wherever practicable.
- [ ] 7. We recommend participating in the Hawaii Green Business Program, that assists and recognizes businesses that strive to operate in an environmentally and socially responsible manner. The program description can be found online at http://energy.hawaii.gov/green-business-program.
- [X] 8. We recommend adopting landscape irrigation conservation best management practices endorsed by the Landscape Industry Council of Hawai'i. These practices can be found online at

https://hawaiiscape.com/index.php. Additional information can be found at https://dlnr.hawaii.gov/cwrm/planning/conservation/.

☐ 9. There may be the potential for ground or surface water degradation/contamination and recommend that approvals for this project be conditioned upon a review by the State Department of Health (HDOH) and the acceptance of any resulting requirements related to water quality.

☐ 10. The proposed water supply source for the project is located in a designated water management area, and a Water Use Permit is required prior to use of water. The Water Use Permit may be conditioned on the requirement to use dual line water supply systems for new industrial and commercial developments.

☐ 11. The Hawai'i Water Plan is directed toward the achievement of the utilization of reclaimed water for uses other than drinking and for potable water needs in one hundred per cent of State and County facilities by December 31, 2045 (§174C-31(g)(6), Hawaii Revised Statutes). We strongly recommend that this project consider using reclaimed water for its non-potable water needs, such as irrigation. Reclaimed water may include, but is not limited to, recycled wastewater, gray water, and captured rainwater/stormwater. Please contact the Hawai'i Department of Health, Wastewater Branch, for more information on their reuse guidelines and the availability of reclaimed water in the project area. Contact information can be found at https://health.hawaii.gov/about/contact/.

☐ 12. A Well Construction Permit(s) is (are) are required before the commencement of any well construction work.

☐ 13. A Pump Installation Permit(s) is (are) required before ground water is developed as a source of supply for the project.

☐ 14. There is (are) well(s) located on or adjacent to this project. If wells are not planned to be used and will be affected by any new construction, they must be properly abandoned and sealed. A permit for well abandonment must be obtained.

☐ 15. Ground-water withdrawals from this project may affect streamflows, which may require an instream flow standard amendment.

☐ 16. A Stream Channel Alteration Permit(s) is (are) required before any alteration can be made to the bed and/or banks of a steam channel.

☐ 17. A Stream Diversion Works Permit(s) is (are) required before any stream diversion works is constructed or altered.

☐ 18. A Petition to Amend the Interim Instream Flow Standard is required for any new or expanded diversion(s) of surface water.

☐ 19. The planned source of water for this project has not been identified in this report. Therefore, we cannot determine what permits or petitions are required by CWRM, or whether there are potential impacts to water resources.

☒ OTHER: Planning -

The proposed water source(s) and projected water demands for the project, both potable and non-potable, should be identified and the calculations used to estimate demands should be provided. Water conservation and efficiency measures to be implemented should also be discussed.

If you have any questions, please contact Ryan Imata of the Groundwater Regulation Branch at (808) 587-0225 or Katie Roth of the Planning Branch (808) 587-0216.

PBR HAWAII
& ASSOCIATES, INC.

KIMI MIKAMI YUEN, LEED® AP BD+C
President / Chairperson

VINCENT SHIGEKUNI
Executive Vice-President / Principal

GRANT T. MURAKAMI, AICP, LEED® AP BD+C
Executive Vice-President / Principal

CATIE CULLISON, AICP
Senior Vice-President / Principal

TOM SCHNELL, AICP
Vice-President / Principal

MARC SHIMATSU, PLA, ASLA
Principal

RAYMOND T. HIGA, PLA, ASLA
Associate Principal

DACHENG DONG, LEED® AP
Associate Principal

NATHALIE RAZO
Associate Principal

ANN MIKIKO BOUSLOG, PhD
Director of Land Economics & Real Estate

RAMSAY R. M. TAUM
Cultural Sustainability Planner

ETSUYO KILA
Senior Associate

GREG NAKAI
Senior Associate

BRADLEY FURUYA, AICP
Associate

C.R. 'IMIPONO WICHMAN
Associate

THERESA DEAN
Associate

R. STAN DUNCAN, PLA, ASLA
Chairman Emeritus

RUSSELL Y. J. CHUNG, PLA, FASLA
Principal Emeritus

THOMAS S. WITTEN, FASLA
Principal Emeritus

W. FRANK BRANDT, FASLA
Founding Partner

January 15, 2026

Ms. Ciara W. K. Kahahane
Deputy Director
State of Hawai'i
Department of Land and Natural Resources
Commission on Water Resource Management
P.O. Box 621
Honolulu, HI 96809

Attn: Ryan Imata, Groundwater Regulation Branch; and Katie Roth, Planning Branch

SUBJECT: PRE-ASSESSMENT CONSULTATION FOR A HRS CHAPTER 343 ENVIRONMENTAL ASSESSMENT – MILILANI HIGH SCHOOL TEACHER WORKFORCE HOUSING PROJECT, MILILANI, O'AHU, PORTIONS OF TAX MAP KEYS (TMKs) 9-5-001: 017 AND 054

Dear Ms. Kahahane,

We are in receipt of CWRM's memorandum to Mr. Ian Hirokawa, Land Division, dated October 6, 2025, regarding the subject Project. As the planning consultant to Pacific Housing Assistance Corporation (PHAC), which is the developer working with the School Facilities Authority (SFA) on the Mililani High School Teacher Workforce Housing Project, we will include all of the comments in the memorandum in the Draft Environmental Assessment (EA).

We value your participation in the environmental review process. CWRM's memorandum and our response will be reproduced in the forthcoming Draft EA.

Sincerely,

PBR HAWAII

Greg Nakai
Senior Associate

cc: Lacey Shimabukuro, PHAC
Karen Arakawa, PHAC

1001 Bishop Street, Suite 650
Honolulu, Hawai'i 96813-3484
Tel: (808) 521-5631
Fax: (808) 523-1402
E-mail: sysadmin@pbrhawaii.com

printed on recycled paper

(This page intentionally left blank.)

JOSH GREEN, M.D.
GOVERNOR | KE KIA'ĀINA

SYLVIA LUKE
LIEUTENANT GOVERNOR | KA HOPE KIA'ĀINA

DAWN N. S. CHANG
CHAIRPERSON
BOARD OF LAND AND NATURAL RESOURCES
COMMISSION ON WATER RESOURCE MANAGEMENT

STATE OF HAWAI'I | KA MOKU'ĀINA 'O HAWAI'I
DEPARTMENT OF LAND AND NATURAL RESOURCES
KA 'OIHANA KUMUWAIWAI 'ĀINA
LAND DIVISION

P.O. BOX 621
HONOLULU, HAWAII 96809

September 12, 2025

MEMORANDUM

FROM: ~~TO~~: **DLNR Agencies:**
__Div. of Aquatic Resources
__Div. of Boating & Ocean Recreation
_X_ Engineering Division (DLNR.ENGR@hawaii.gov)
_X_ Div. of Forestry & Wildlife (rubyrosa.t.terrago@hawaii.gov)
__Div. of State Parks
_X_ Commission on Water Resource Management (DLNR.CWRM@hawaii.gov)
__Office of Conservation & Coastal Lands
_X_ Land Division – O'ahu District (barry.w.cheung@hawaii.gov)
_X_ Aha Moku Advisory Committee (leimana.k.damate@hawaii.gov)

TO: ~~FROM~~: Ian C. Hirokawa, Acting Land Administrator
SUBJECT: **Pre-Assessment Consultation for an Environmental Assessment – Mililani High School Teacher Workforce Housing Project**
LOCATION: Mililani, O'ahu, Hawai'i, TMK: (1) 9-5-001:054 (por.)
APPLICANT: PBR Hawai'i and Associates on behalf of Pacific Housing Assistance Corporation (PHAC)

Transmitted for your review and comment is information on the above-referenced subject matter.

Please submit comments by **October 3, 2025.** If no response is received by this date, we will assume your agency has no comments. Should you have any questions about this request, please contact Dayna Vierra at dayna.k.vierra@hawaii.gov. Thank you.

BRIEF COMMENTS:

( ) We have no objections.
( ) We have no comments.
( ) We have no additional comments.
(✓) Comments are included/attached.

Signed:
Print Name: Dina U. Lau, Acting Chief Engineer
Division: Engineering Division
Date: Oct 3, 2025

Attachment(s)

DEPARTMENT OF LAND AND NATURAL RESOURCES
ENGINEERING DIVISION

LD/Ian C. Hirokawa

Ref: Pre-Assessment Consultation for an Environmental Assessment – Mililani High School Teacher Workforce Housing Project
Location: Mililani, O'ahu, Hawai'i
TMK(s): (1) 9-5-001:054 (por.)
Applicant: PBR Hawaii and Associates on behalf of Pacific Housing Assistance Corporation (PHAC)

COMMENTS

The rules and regulations of the National Flood Insurance Program (NFIP), Title 44 of the Code of Federal Regulations (44CFR), are in effect when development falls within a Special Flood Hazard Area (high-risk areas). Be advised that 44CFR, Chapter 1, Subchapter B, Part 60 reflects the minimum standards as set forth by the NFIP. Local community flood ordinances may stipulate higher standards that can be more restrictive and would take precedence over the minimum NFIP standards.

The owner of the project property and/or their representative is responsible for researching the Flood Hazard Zone designation for the project. Flood zones subject to NFIP requirements are identified on FEMA's Flood Insurance Rate Maps (FIRM). The official FIRMs can be accessed through FEMA's Map Service Center (msc.fema.gov). Our Flood Hazard Assessment Tool (FHAT) (fhat.hawaii.gov) could also be used to research flood hazard information.

If there are questions regarding the local flood ordinances, please contact the applicable County NFIP coordinating agency below:

- Oahu: City and County of Honolulu, Department of Planning and Permitting (808) 768-8098.
- Hawaii Island: County of Hawaii, Department of Public Works (808) 961-8327.
- Maui/Molokai/Lanai County of Maui, Department of Planning (808) 270-7139.
- Kauai: County of Kauai, Department of Public Works (808) 241-4849.

Signed: _____
DINA U. LAU, ACTING CHIEF ENGINEER

Date: Oct 3, 2025

PBR HAWAII
& ASSOCIATES, INC.

KIMI MIKAMI YUEN, LEED® AP BD+C
President / Chairperson

VINCENT SHIGEKUNI
Executive Vice-President / Principal

GRANT T. MURAKAMI, AICP, LEED® AP BD+C
Executive Vice-President / Principal

CATIE CULLISON, AICP
Senior Vice-President / Principal

TOM SCHNELL, AICP
Vice-President / Principal

MARC SHIMATSU, PLA, ASLA
Principal

RAYMOND T. HIGA, PLA, ASLA
Associate Principal

DACHENG DONG, LEED® AP
Associate Principal

NATHALIE RAZO
Associate Principal

ANN MIKIKO BOUSLOG, PhD
Director of Land Economics & Real Estate

RAMSAY R. M. TAUM
Cultural Sustainability Planner

ETSUYO KILA
Senior Associate

GREG NAKAI
Senior Associate

BRADLEY FURUYA, AICP
Associate

C.R. 'IMIPONO WICHMAN
Associate

THERESA DEAN
Associate

R. STAN DUNCAN, PLA, ASLA
Chairman Emeritus

RUSSELL Y. J. CHUNG, PLA, FASLA
Principal Emeritus

THOMAS S. WITTEN, FASLA
Principal Emeritus

W. FRANK BRANDT, FASLA
Founding Partner

January 15, 2026

Ms. Dina U. Lau
Acting Chief Engineer
State of Hawai'i
Department of Land and Natural Resources
Engineering Division
P.O. Box 621
Honolulu, HI 96809

SUBJECT: PRE-ASSESSMENT CONSULTATION FOR A HRS CHAPTER 343 ENVIRONMENTAL ASSESSMENT – MILILANI HIGH SCHOOL TEACHER WORKFORCE HOUSING PROJECT, MILILANI, O'AHU, PORTIONS OF TAX MAP KEYS (TMKs) 9-5-001: 017 AND 054

Dear Ms. Lau,

We are in receipt of Engineering Division's memorandum to Mr. Ian Hirokawa, Land Division, dated October 3, 2025, regarding the subject Project. As the planning consultant to Pacific Housing Assistance Corporation (PHAC), which is the developer working with the School Facilities Authority (SFA) on the Mililani High School Teacher Workforce Housing Project, we appreciate the information on the National Flood Insurance Program (NFIP), and on researching the Flood Hazard Zone designation for the Project site.

We value your participation in the environmental review process. Engineering Division's memorandum and our response will be reproduced in the forthcoming Draft Environmental Assessment (EA).

Sincerely,

PBR HAWAII

Greg Nakai
Senior Associate

cc: Lacey Shimabukuro, PHAC
Karen Arakawa, PHAC

1001 Bishop Street, Suite 650
Honolulu, Hawai'i 96813-3484
Tel: (808) 521-5631
Fax: (808) 523-1402
E-mail: sysadmin@pbrhawaii.com

printed on recycled paper

(This page intentionally left blank.)

JOSH GREEN, M.D.
GOVERNOR
KE KIA'ĀINA

EDWIN H. SNIFFEN
DIRECTOR
KA LUNA HO'OKELE

Deputy Directors
Nā Hope Luna Ho'okele
DREANALEE K. KALILI
TAMMY L. LEE
CURT T. OTAGURO
ROBIN K. SHISHIDO

STATE OF HAWAI'I | KA MOKU'ĀINA 'O HAWAI'I
DEPARTMENT OF TRANSPORTATION | KA 'OIHANA ALAKAU
869 PUNCHBOWL STREET
HONOLULU, HAWAII 96813-5097

IN REPLY REFER TO:

DIR0002515
HWY-PL 25-2.35125

September 23, 2025

Mr. Greg Nakai, Senior Associate
PBR HAWAII & Associates, Inc.
1001 Bishop Street, Suite 650
Honolulu, Hawaii 96813

Dear Mr. Nakai,

Subject: Early Consultation for an Environment Assessment (EA)
Mililani High School Teacher Workforce Housing Project
Mililani, Oahu, Hawaii
Tax Map Key No. (1) 9-5-001: 054 (por.)

Thank you for your letter dated September 5, 2025, requesting our review and comments on the subject project.

Pacific Housing Assistance Corporation proposes to develop approximately 94 rental units for licensed teachers, educators, and education staff on a 1.7-acre site within the Mililani High School campus. The development will be accessed directly from Meheula Parkway (county) and regionally through the H-2 Veterans Memorial Freeway and Kamehameha Highway (state). The development proposes a new access point with right-turn-in and right-turn-out movements only.

The Hawaii Department of Transportation (HDOT) has the following comments:

1. Based the project information provided, the HDOT anticipates a potential indirect adverse impact to the HDOT highways. The EA should include a Traffic Impact Analysis Report (TIAR) prepared and stamped by a licensed engineer. The TIAR should include:

    a. The study area that includes intersections along state highways where the peak hour traffic volume is expected to increase by more than three percent.

    b. Description of existing trip generation at the site, existing traffic conditions, and multimodal routes in the study area.

    c. Forecasted traffic and multimodal conditions in the horizon year (year at full project build out) without the project and with the project. If the project construction is phased over multiple years, interim horizon years should be analyzed for the completion of each phase.

    d. Evaluate existing and future safety conditions for all roadway users.

e. Suggest measures to mitigate potential impacts.

2. Determine the applicability for the following permits:

   a. Permit to Perform Work Upon State Highways is required for any work within the state highway right-of-way (ROW), (Hawaii Revised Statutes [HRS] Chapter 264). The application includes the review and approval of construction drawings and a Traffic Management Plan.

   b. Permit to Operate or Transport Oversize and/or Overweight Vehicles and Loads Over State Highways (HRS Chapter 291, Section 36).

   c. Permit for the Occupancy and Use of State Highways (HRS Chapter 264). This is applicable to underground and overhead power lines and utility pipelines within the state highway ROW.

   d. Permit applications and instructions are available at the following link:

      https://hidot.hawaii.gov/highways/home/doing-business/guide-to-permits

3. Describe strategies to reduce carbon emissions from the project, if any. Suggestions include:

   a. Incorporate elements that encourage and enhance the use of multiple types of transportation to reduce carbon emissions.

   b. Implement energy-efficient technologies and practices, such as light-emitting diode lighting.

   c. Use sustainable, recycled, or low-emission materials in construction and manufacturing.

If you have any questions, please contact Jeyan Thirugnanam, Land Use Planning Engineer, Planning Branch at (808) 587-6336 or by email at jeyan.thirugnanam@hawaii.gov. Please reference file review number PL 2025-053.

Sincerely,

EDWIN H. SNIFFEN
Director of Transportation

PBR HAWAII
& ASSOCIATES, INC.

KIMI MIKAMI YUEN, LEED® AP BD+C
President / Chairperson

VINCENT SHIGEKUNI
Executive Vice-President / Principal

GRANT T. MURAKAMI, AICP, LEED® AP BD+C
Executive Vice-President / Principal

CATIE CULLISON, AICP
Senior Vice-President / Principal

TOM SCHNELL, AICP
Vice-President / Principal

MARC SHIMATSU, PLA, ASLA
Principal

RAYMOND T. HIGA, PLA, ASLA
Associate Principal

DACHENG DONG, LEED® AP
Associate Principal

NATHALIE RAZO
Associate Principal

ANN MIKIKO BOUSLOG, PhD
Director of Land Economics & Real Estate

RAMSAY R. M. TAUM
Cultural Sustainability Planner

ETSUYO KILA
Senior Associate

GREG NAKAI
Senior Associate

BRADLEY FURUYA, AICP
Associate

C.R. 'IMIPONO WICHMAN
Associate

THERESA DEAN
Associate

R. STAN DUNCAN, PLA, ASLA
Chairman Emeritus

RUSSELL Y. J. CHUNG, PLA, FASLA
Principal Emeritus

THOMAS S. WITTEN, FASLA
Principal Emeritus

W. FRANK BRANDT, FASLA
Founding Partner

January 15, 2026

Mr. Edwin H. Sniffen
Director of Transportation
State of Hawai'i
Department of Transportation
869 Punchbowl Street
Honolulu, HI 96813-5097

Attn: Jeyan Thirugnanam, Planning Branch

SUBJECT: PRE-ASSESSMENT CONSULTATION FOR A HRS CHAPTER 343 ENVIRONMENTAL ASSESSMENT – MILILANI HIGH SCHOOL TEACHER WORKFORCE HOUSING PROJECT, MILILANI, O'AHU, PORTIONS OF TAX MAP KEYS (TMKs) 9-5-001: 017 AND 054

Dear Mr. Sniffen,

Thank you for your letter dated September 23, 2025 (reference # DIR0002515, HWY-PL-25-2.35125), regarding the subject Project. As the planning consultant to Pacific Housing Assistance Corporation (PHAC), which is the developer working with the School Facilities Authority (SFA) on the Mililani High School Teacher Workforce Housing Project, we offer the following responses to your comments:

1. The Draft EA will summarize and include a Transportation Impact Assessment Report (TIAR).
2. The Draft EA will determine applicability of the three permits listed in your letter.
3. The Draft EA will describe the strategies to reduce carbon emissions from the project.

We value your participation in the environmental review process. Your letter and our response will be reproduced in the forthcoming Draft Environmental Assessment (EA).

Sincerely,

PBR HAWAII

Greg Nakai
Senior Associate

cc: Lacey Shimabukuro, PHAC
Karen Arakawa, PHAC

1001 Bishop Street, Suite 650
Honolulu, Hawai'i 96813-3484
Tel: (808) 521-5631
Fax: (808) 523-1402
E-mail: sysadmin@pbrhawaii.com

printed on recycled paper

(This page intentionally left blank.)

From: Browning, Joy
To: Greg Nakai
Subject: Mililani High School Teacher Workforce Housing Project, Oahu
Date: Friday, September 12, 2025 8:02:13 AM
Attachments: image002.png

Warning: Unusual sender <joy_browning@fws.gov>
You don't usually receive emails from this address. Make sure you trust this sender before taking any actions.

Aloha Mr. Nakai,

The Pacific Island Fish and Wildlife Office (PIFWO) has transitioned to the use of the Information for Planning and Consultation (IPaC) online portal, https://ipac.ecosphere.fws.gov/, for federal action agencies and non-federal agencies or individuals to obtain official species lists, including threatened and endangered species and designated critical habitat in your project area. Using IPaC expedites the process for species list distribution and takes minimal time to complete.

New information based on updated surveys, changes in the abundance and distribution of species, changed habitat conditions, or other factors could change the species list. Verification can be completed by visiting the IPaC website at regular intervals during project planning and implementation and refreshing your initial species list. We hope this process provides efficiencies to our partners in obtaining a species list.

Sincerely,

Joy Hiromasa Browning

Fish and Wildlife Biologist
Pacific Islands Fish and Wildlife Office
U.S. Fish and Wildlife Service
300 Ala Moana Blvd., Rm 3-122
Honolulu, Hawaii 96850

PBR HAWAII
& ASSOCIATES, INC.

KIMI MIKAMI YUEN, LEED® AP BD+C
President / Chairperson

VINCENT SHIGEKUNI
Executive Vice-President / Principal

GRANT T. MURAKAMI, AICP, LEED® AP BD+C
Executive Vice-President / Principal

CATIE CULLISON, AICP
Senior Vice-President / Principal

TOM SCHNELL, AICP
Vice-President / Principal

MARC SHIMATSU, PLA, ASLA
Principal

RAYMOND T. HIGA, PLA, ASLA
Associate Principal

DACHENG DONG, LEED® AP
Associate Principal

NATHALIE RAZO
Associate Principal

ANN MIKIKO BOUSLOG, PhD
Director of Land Economics & Real Estate

RAMSAY R. M. TAUM
Cultural Sustainability Planner

ETSUYO KILA
Senior Associate

GREG NAKAI
Senior Associate

BRADLEY FURUYA, AICP
Associate

C.R. 'IMIPONO WICHMAN
Associate

THERESA DEAN
Associate

R. STAN DUNCAN, PLA, ASLA
Chairman Emeritus

RUSSELL Y. J. CHUNG, PLA, FASLA
Principal Emeritus

THOMAS S. WITTEN, FASLA
Principal Emeritus

W. FRANK BRANDT, FASLA
Founding Partner

January 15, 2026

Ms. Joy Hiromasa Browning
Fish and Wildlife Service Biologist
U.S. Fish and Wildlife Service
300 Ala Moana Blvd., Rm 3-122
Honolulu, HI 96850

SUBJECT: PRE-ASSESSMENT CONSULTATION FOR A HRS CHAPTER 343 ENVIRONMENTAL ASSESSMENT – MILILANI HIGH SCHOOL TEACHER WORKFORCE HOUSING PROJECT, MILILANI, O'AHU, PORTIONS OF TAX MAP KEYS (TMKs) 9-5-001: 017 AND 054

Dear Ms. Browning,

Thank you for your email dated September 12, 2025, regarding the subject Project. As the planning consultant to Pacific Housing Assistance Corporation (PHAC), which is the developer working with the School Facilities Authority (SFA) on the Mililani High School Teacher Workforce Housing Project, we appreciate the information regarding IPaC. We were able to contract a biological consultant, AECOS, and we will summarize the results of AECOS's terrestrial flora and fauna assessment (as well as include a copy of the assessment) in the upcoming Draft Environmental Assessment (EA).

We value your participation in the environmental review process. Your email and our response will be reproduced in the forthcoming Draft EA.

Sincerely,

PBR HAWAII

Greg Nakai
Senior Associate

cc: Lacey Shimabukuro, PHAC
Karen Arakawa, PHAC

1001 Bishop Street, Suite 650
Honolulu, Hawai'i 96813-3484
Tel: (808) 521-5631
Fax: (808) 523-1402
E-mail: sysadmin@pbrhawaii.com

printed on recycled paper

BOARD OF WATER SUPPLY
KA 'OIHANA WAI
CITY AND COUNTY OF HONOLULU

630 SOUTH BERETANIA STREET • HONOLULU, HAWAI'I 96843
Phone: (808) 748-5000 • boardofwatersupply.com

RICK BLANGIARDI
MAYOR
MEIA

ERNEST Y. W. LAU, P.E.
MANAGER AND CHIEF ENGINEER
MANAKIA A ME KAHU WILIKĪ

ERWIN KAWATA
DEPUTY MANAGER
HOPE MANAKIA

NĀ'ĀLEHU ANTHONY, Chair
JONATHAN KANESHIRO, Vice Chair
BRYAN P. ANDAYA
LANCE WILHELM
EDWIN H. SNIFFEN, Ex-Officio
GENE C. ALBANO, P.E., Ex-Officio

October 1, 2025

Mr. Greg Nakai
PBR Hawai'i & Associates Inc.
1001 Bishop Street, Suite 650
Honolulu, Hawai'i 96813-3484

Dear Mr. Nakai:

Subject: Your Letter Dated September 5, 2025, Requesting Comments on the Pre-Assessment Consultation for the Mililani High School Teacher Workforce Housing Project off Mehe'ula Parkway, Tax Map Key: 9-5-001: 054

Thank you for your letter regarding the proposed 94-unit teacher workforce housing project.

The existing water system is adequate to accommodate the proposed development. However, please be advised that this information is based upon current data, and therefore, the Board of Water Supply (BWS) reserves the right to change any position or information stated herein up until the final approval of the building permit application. The final decision on the availability of water will be confirmed when the building permit application is submitted for approval.

When water is made available, the applicant will be required to pay our Water System Facilities Charges (WSFC) for resource development, transmission, and daily storage.

Water conservation measures are required for all proposed developments. These measures include utilization of nonpotable water for irrigation using rain catchment, drought tolerant plants, xeriscape landscaping, efficient irrigation systems, such as a drip system and moisture sensors, and the use of Water Sense labeled ultra-low flow water fixtures and toilets.

Consistent with Act 170, 2016 (H.B. 1749), the developer will be required to utilize reclaimed water for uses other than drinking and potable water demands of the proposed project. The developer should investigate the feasibility of using reclaimed water for this State-owned land project and submit a report of the investigation to the BWS for our review.

The proposed project is subject to BWS Cross-Connection Control and Backflow Prevention requirements prior to the issuance of the Building Permit Applications.

The construction drawings should be submitted for our approval, and the construction schedule should be coordinated to minimize impact to the water system.

The on-site fire protection requirements should be coordinated with the Fire Prevention Bureau of the Honolulu Fire Department.

For the request for deferral of WSFC until the Certificate of Occupancy is obtained pursuant to Section 201-H, HRS, please coordinate with Garon Hamasaki, Service Engineering Branch of our Customer Care Division, at (808) 748-5472.

The BWS may waive the WSFC and new meter cost for qualified on-site affordable and homeless dwelling units, up to 500 dwelling units per year. The waivers will be evaluated when the building permit is submitted for approval. To qualify, the dwelling units must be certified as either affordable or homeless dwelling units by the appropriate agency of the City and County of Honolulu. Waiver of the WSFC will apply only to fixture units associated with the certified dwelling units. The amount of the meter waiver shall be calculated as a percentage of the number of certified dwelling units to the total number of dwelling units in the project. If the annual cap of 500 dwelling units has not been reached and a project is proposed that would qualify for more than the remaining number of dwelling units in that year, the Manager and Chief Engineer has the discretion to increase that year's limit.

If you have any questions, please contact Daniel Koge, Project Review Branch of our Water Resources Division at (808) 748-5444.

Very truly yours,

ERNEST Y. W. LAU, P.E.
Manager and Chief Engineer

PBR HAWAII
& ASSOCIATES, INC.

KIMI MIKAMI YUEN, LEED® AP BD+C
President / Chairperson

VINCENT SHIGEKUNI
Executive Vice-President / Principal

GRANT T. MURAKAMI, AICP, LEED® AP BD+C
Executive Vice-President / Principal

CATIE CULLISON, AICP
Senior Vice-President / Principal

TOM SCHNELL, AICP
Vice-President / Principal

MARC SHIMATSU, PLA, ASLA
Principal

RAYMOND T. HIGA, PLA, ASLA
Associate Principal

DACHENG DONG, LEED® AP
Associate Principal

NATHALIE RAZO
Associate Principal

ANN MIKIKO BOUSLOG, PhD
Director of Land Economics & Real Estate

RAMSAY R. M. TAUM
Cultural Sustainability Planner

ETSUYO KILA
Senior Associate

GREG NAKAI
Senior Associate

BRADLEY FURUYA, AICP
Associate

C.R. 'IMIPONO WICHMAN
Associate

THERESA DEAN
Associate

R. STAN DUNCAN, PLA, ASLA
Chairman Emeritus

RUSSELL Y. J. CHUNG, PLA, FASLA
Principal Emeritus

THOMAS S. WITTEN, FASLA
Principal Emeritus

W. FRANK BRANDT, FASLA
Founding Partner

January 15, 2026

Mr. Ernest Y.W. Lau, P.E.
Manager and Chief Engineer
Board of Water Supply
City and County of Honolulu
630 South Beretania Street
Honolulu, HI 96843

Attn: Daniel Koge, Project Review Branch, Water Resources Division

SUBJECT: PRE-ASSESSMENT CONSULTATION FOR A HRS CHAPTER 343 ENVIRONMENTAL ASSESSMENT – MILILANI HIGH SCHOOL TEACHER WORKFORCE HOUSING PROJECT, MILILANI, O'AHU, PORTIONS OF TAX MAP KEYS (TMKs) 9-5-001: 017 AND 054

Dear Mr. Lau:

Thank you for your letter dated October 1, 2025, regarding the subject Project. As the planning consultant to Pacific Housing Assistance Corporation (PHAC), which is the developer working with the School Facilities Authority (SFA) on the Mililani High School Teacher Workforce Housing Project, we appreciate the information provided regarding water availability, Water System Facilities Charges (WSFC), water conservation measures, utilization of reclaimed water, BWS Cross-Connection Control and Backflow Prevention requirements, construction drawing review, on-site fire protection requirements, and potential waiver of the WSFC. The information provided will be included in the Draft Environmental Assessment (EA).

We value your participation in the environmental review process. Your letter and our response will be reproduced in the forthcoming Draft EA.

Sincerely,

PBR HAWAII

Greg Nakai
Senior Associate

cc: Lacey Shimabukuro, PHAC
Karen Arakawa, PHAC

1001 Bishop Street, Suite 650
Honolulu, Hawai'i 96813-3484
Tel: (808) 521-5631
Fax: (808) 523-1402
E-mail: sysadmin@pbrhawaii.com

printed on recycled paper

(This page intentionally left blank.)

DEPARTMENT OF DESIGN AND CONSTRUCTION
KA 'OIHANA HAKULAU A ME KE KĀPILI
CITY AND COUNTY OF HONOLULU

650 SOUTH KING STREET, 11TH FLOOR • HONOLULU, HAWAI'I 96813
PHONE: (808) 768-8480 • FAX: (808) 768-4567 • WEBSITE: honolulu.gov

RICK BLANGIARDI
MAYOR
MEIA

HAKU MILLES, P.E.
DIRECTOR
PO'O

MARK YONAMINE, P.E.
DEPUTY DIRECTOR
HOPE PO'O

September 17, 2025

SENT VIA EMAIL

Mr. Greg Nakai
gnakai@pbrhawaii.com

Dear Mr. Nakai:

Subject: Pre-Assessment Consultation for a HRS Chapter 343 Environmental Assessment - Mililani High School Teacher Workforce Housing Project, Mililani, O'ahu
Tax Map Key (TMK) 9-5-001:054 Portion of

Thank you for the opportunity to review and comment. The Department of Design and Construction has no comments to offer at this time.

Should you have any questions, please contact me at (808) 768-8480.

Sincerely,

Haku Milles, P.E., LEED AP
Director

HM:krn (945091)

PBR HAWAII
& ASSOCIATES, INC.

KIMI MIKAMI YUEN, LEED® AP BD+C
President / Chairperson

VINCENT SHIGEKUNI
Executive Vice-President / Principal

GRANT T. MURAKAMI, AICP, LEED® AP BD+C
Executive Vice-President / Principal

CATIE CULLISON, AICP
Senior Vice-President / Principal

TOM SCHNELL, AICP
Vice-President / Principal

MARC SHIMATSU, PLA, ASLA
Principal

RAYMOND T. HIGA, PLA, ASLA
Associate Principal

DACHENG DONG, LEED® AP
Associate Principal

NATHALIE RAZO
Associate Principal

ANN MIKIKO BOUSLOG, PhD
Director of Land Economics & Real Estate

RAMSAY R. M. TAUM
Cultural Sustainability Planner

ETSUYO KILA
Senior Associate

GREG NAKAI
Senior Associate

BRADLEY FURUYA, AICP
Associate

C.R. 'IMIPONO WICHMAN
Associate

THERESA DEAN
Associate

R. STAN DUNCAN, PLA, ASLA
Chairman Emeritus

RUSSELL Y. J. CHUNG, PLA, FASLA
Principal Emeritus

THOMAS S. WITTEN, FASLA
Principal Emeritus

W. FRANK BRANDT, FASLA
Founding Partner

January 15, 2026

Mr. Haku Milles, P.E., LEED AP
Director
Department of Design and Construction
City and County of Honolulu
650 S. King St. 11th Floor
Honolulu, HI 96813

SUBJECT: PRE-ASSESSMENT CONSULTATION FOR A HRS CHAPTER 343 ENVIRONMENTAL ASSESSMENT – MILILANI HIGH SCHOOL TEACHER WORKFORCE HOUSING PROJECT, MILILANI, O'AHU, PORTIONS OF TAX MAP KEYS (TMKs) 9-5-001: 017 AND 054

Dear Mr. Milles,

Thank you for your letter dated September 17, 2025, regarding the subject Project. As the planning consultant to Pacific Housing Assistance Corporation (PHAC), which is the developer working with the School Facilities Authority (SFA) on the Mililani High School Teacher Workforce Housing Project, we acknowledge your Department has no comments to offer at this time.

We value your participation in the environmental review process. Your letter and our response will be reproduced in the forthcoming Draft Environmental Assessment (EA).

Sincerely,

PBR HAWAII

Greg Nakai
Senior Associate

cc: Lacey Shimabukuro, PHAC
Karen Arakawa, PHAC

1001 Bishop Street, Suite 650
Honolulu, Hawai'i 96813-3484
Tel: (808) 521-5631
Fax: (808) 523-1402
E-mail: sysadmin@pbrhawaii.com

printed on recycled paper

DEPARTMENT OF PLANNING AND PERMITTING
KA ʻOIHANA HOʻOLĀLĀ A ME NĀ PALAPALA ʻAE
CITY AND COUNTY OF HONOLULU

650 SOUTH KING STREET, 7TH FLOOR • HONOLULU, HAWAI'I 96813
PHONE: (808) 768-8000 • FAX: (808) 768-6041 • WEBSITE: honolulu.gov/dpp

RICK BLANGIARDI
MAYOR
MEIA

DAWN TAKEUCHI APUNA
DIRECTOR
PO'O

BRYAN GALLAGHER, P.E.
DEPUTY DIRECTOR
HOPE PO'O

REGINA MALEPEAI
2ND DEPUTY DIRECTOR
HOPE PO'O KUALUA

October 6, 2025

GEN-2025-150 (DC)

Mr. Greg Nakai
PBR HAWAII & Associates, Inc.
1001 Bishop Street, Suite 650
Honolulu, Hawai'i 96813

Dear Mr. Nakai:

SUBJECT: Pre-Assessment Consultation for
Draft Environmental Assessment (EA)
Mililani High School Teacher Workforce Housing Project
95-1200 Meheula Parkway – Mililani
Tax Map Key 9-5-001: 054

This is in response to your letter, received September 10, 2025, requesting the Department of Planning and Permitting (DPP) provide comments on the upcoming Draft EA, as required under Chapter 343, Hawai'i Revised Statutes for the proposed Mililani High School Teacher Workforce Housing. The proposed Project will be developed on a 1.7-acre portion of a 26.432-acre zoning lot. The site is within the R-5 Residential District (R-5 District) and the State Land Use Urban District. The proposed work includes construction of new multifamily rental units (Project). The DPP has the following comments that should be included in the Draft EA:

1. Consistency with Long-Range Plans: The Draft EA should address the proposed Project's consistency with the O'ahu General Plan and Central O'ahu Sustainable Communities Plan. The Draft EA should address how the proposed Project is consistent, inconsistent, or implements each of the relevant statements from the respective plans.

2. Compliance with Revised Ordinances of Honolulu (ROH), Chapter 21, the Land Use Ordinance (LUO): The Project site is located in the R-5 District. Therefore, proposed development must comply with development standards applicable to the R-5 District. Project compliance with these standards should be presented and evaluated in the Draft EA. ROH Chapter 21 is available on our website:

www.honolulu.gov/dpp/resources/ordinances.html

The Draft EA should identify the Project's consistency with the development standards of the R-5 District and other applicable LUO regulations, including but not limited to the following:

- Maximum allowable heights and building area;
- Required yard and height setbacks;
- Parking, loading, and vehicular circulation and maneuvering areas;
- Impervious surface coverage; and
- Landscape screening and parking lot landscaping.

The Mililani High School Teacher Workforce Housing is considered a multi-unit dwelling in the LUO, which is not a permitted use in the R-5 District. The Draft EA should address how the Project will proceed considering the use is not permitted in this zoning district.

3. Other Permits and Approvals: The Draft EA should identify what other permits are likely to be required and what those permits are addressing. For example, if the Project comes in as a 201H project the Draft EA should disclose what exemptions the Project will be requesting.

4. Flood Zone: The Draft EA should identify the subject property's Flood Zone as mapped by the Federal Emergency Management Agency and evaluate the proposed Project's compliance with the City's Flood Hazard Areas Ordinance (ROH Chapter 21A).

5. Alternatives: The Draft EA must include potential development alternatives and provide reasons why the proposed action is the most practical approach.

Thank you for the opportunity to comment. We may have comments regarding the Draft EA when more detailed plans are provided. Should you have any other questions, please contact David Cholak, of the Zoning Regulations and Permits Branch, at (808) 768-8026 or via email at david.cholak@honolulu.gov.

Very truly yours,

FOR Dawn Takeuchi Apuna
Director

PBR HAWAII
& ASSOCIATES, INC.

KIMI MIKAMI YUEN, LEED® AP BD+C
President / Chairperson

VINCENT SHIGEKUNI
Executive Vice-President / Principal

GRANT T. MURAKAMI, AICP, LEED® AP BD+C
Executive Vice-President / Principal

CATIE CULLISON, AICP
Senior Vice-President / Principal

TOM SCHNELL, AICP
Vice-President / Principal

MARC SHIMATSU, PLA, ASLA
Principal

RAYMOND T. HIGA, PLA, ASLA
Associate Principal

DACHENG DONG, LEED® AP
Associate Principal

NATHALIE RAZO
Associate Principal

ANN MIKIKO BOUSLOG, PhD
Director of Land Economics & Real Estate

RAMSAY R. M. TAUM
Cultural Sustainability Planner

ETSUYO KILA
Senior Associate

GREG NAKAI
Senior Associate

BRADLEY FURUYA, AICP
Associate

C.R. 'IMIPONO WICHMAN
Associate

THERESA DEAN
Associate

R. STAN DUNCAN, PLA, ASLA
Chairman Emeritus

RUSSELL Y. J. CHUNG, PLA, FASLA
Principal Emeritus

THOMAS S. WITTEN, FASLA
Principal Emeritus

W. FRANK BRANDT, FASLA
Founding Partner

1001 Bishop Street, Suite 650
Honolulu, Hawai'i 96813-3484
Tel: (808) 521-5631
Fax: (808) 523-1402
E-mail: sysadmin@pbrhawaii.com

printed on recycled paper

January 15, 2026

Ms. Dawn Takeuchi Apuna
Director
Department of Planning & Permitting
City and County of Honolulu
650 S. King St. 7th Floor
Honolulu, HI 96813

Attn: David Cholak, Zoning Regulations and Permits Branch

SUBJECT: PRE-ASSESSMENT CONSULTATION FOR A HRS CHAPTER 343 ENVIRONMENTAL ASSESSMENT – MILILANI HIGH SCHOOL TEACHER WORKFORCE HOUSING PROJECT, MILILANI, O'AHU, PORTIONS OF TAX MAP KEYS (TMKs) 9-5-001: 017 AND 054

Dear Ms. Apuna,

Thank you for your letter dated October 6, 2025, regarding the subject Project. As the planning consultant to Pacific Housing Assistance Corporation (PHAC), which is the developer working with the School Facilities Authority (SFA) on the Mililani High School Teacher Workforce Housing Project, we have reviewed your comments and offer the following responses:

1. As recommended, the Draft Environmental Assessment (EA) will address the proposed Project's consistency with the O'ahu General Plan and the Central O'ahu Sustainable Communities Plan.
2. The Draft EA will address the Project's consistency with the development standards applicable to the R-5 Zoning District, as well as how the Project will proceed considering the proposed use is not permitted in the R-5 Zoning District.
3. The Draft EA will identify what other permits are likely to be required, and since the proposed Project will require 201H approval, a list of possible exemptions.
4. The Draft EA will identify the Project's underlying flood zone designation as mapped by the Federal Emergency Management Agency and will evaluate the Project's compliance with the City's Flood Hazard Areas Ordinance (ROH Chapter 21A).
5. The Draft EA will include a discussion of development alternatives that were considered and why the proposed action is the most practical approach.

We value your participation in the environmental review process. Your letter and our response will be reproduced in the forthcoming Draft EA.

Sincerely,

PBR HAWAII

Greg Nakai
Senior Associate

cc: Lacey Shimabukuro, PHAC
Karen Arakawa, PHAC

(This page intentionally left blank.)

DEPARTMENT OF TRANSPORTATION SERVICES
KA 'OIHANA LAWELAWE 'ŌHUA
CITY AND COUNTY OF HONOLULU
711 KAPI'OLANI BOULEVARD, SUITE 1600
HONOLULU, HAWAI'I 96813
Phone: (808) 768-8305 • Fax: (808) 768-4730 • Website: honolulu.gov/transportation

RICK BLANGIARDI
MAYOR
MEIA

J. ROGER MORTON
DIRECTOR
PO'O

JON Y. NOUCHI
DEPUTY DIRECTOR
HOPE PO'O

TP10/25-945457

October 8, 2025

Mr. Greg Nakai, Senior Planner
PBR HAWAII & Associates, Inc.
1001 Bishop Street, Suite 650
Honolulu, Hawai'i 96813

Dear Mr. Nakai:

SUBJECT: Pre-Assessment Consultation for a HRS Chapter 343 Environmental Assessment - Mililani High School Teacher Workforce Housing Project, Mililani, O'ahu
Tax Map Key (TMK) 9-5-001: 054

Thank you for the opportunity to provide written comments regarding the Pre-Assessment Consultation for a HRS Chapter 343 Environmental Assessment - Mililani High School Teacher Workforce Housing Project, Mililani, O'ahu Tax Map Key (TMK) 9-5-001: 054. We have the following comments.

1. Transportation Impact Assessment (TIA). The applicant should perform a TIA to examine the vehicle, pedestrian, bicycle, and public transit safety, stress, and comfort levels at the nearby intersections and driveways with corresponding improvements to mitigate these impacts by applying Complete Streets principles. The applicant shall discuss the future year growth rate, trip distribution, mode split, and route assignment assumptions used in the TIA.

   The applicant shall submit all native files (e.g., Synchro, Excel, etc.) for the raw multi-modal counts (in the format specified at https://geocounts.com/api/format/ and the example file at https://bit.ly/DTS-count-sample) and accompanying analyses to the Department of Transportation Services Regional Planning Branch (RPB) at dtsplanningdiv@honolulu.gov. Please refer to the Department of Transportation Services (DTS) TIA Guide for multimodal assessment tools and recommended analyses. The TIA Guide can be found at http://www4.honolulu.gov/docushare/dsweb/View/Collection-7723.

2. Transportation Demand Management (TDM) Strategies. The Applicant should include a description of how the Project will promote, encourage, and monitor alternative transportation usage. Page 19 of the City and County of Honolulu's Transportation Impact Assessment (TIA) Guide requires Projects that generate 100 or more net new a.m. or p.m. peak period vehicle trips and contain ongoing operational strategies, the Project sponsor must also submit an annual TDM compliance report for the first five years following completion of the Project (or completion of each phase for phased projects) for review and approval by the Department of Transportation Services, Transportation Performance and Development Division. The annual report should document the status and effectiveness of the transportation improvements including the actual vehicle trip reduction. The City's TIA Guide describes recommended TDM strategies.

3. Oahu Bike Plan. The Oahu Bike Plan (2019) includes proposed projects along the frontage of the Project site including; Meheula Parkway (Project ID 1-12) Protected Bike Lane, Lanikuhana Street to H-2 Interchange, Kamehameha Highway (Project ID 2-9) Shoulder Bikeway, Meheula Parkway to Ka Uka Boulevard, Kipapa Drive (Project 2-11) Bike Lane, Kipapa Drive Loop. Any improvements shall not interfere with the future bike facilities.

4. Parking. A discussion regarding off-street parking and site generated parking demand should be included in the environmental assessment. The Project shall provide on-site bicycle parking that, at a minimum, meets the requirements of Land Use Ordinance, Section 21-6.40.

5. Street Usage Permit. A street usage permit from the DTS should be obtained for any construction-related work that may require the temporary closure of any traffic lane, sidewalk, bicycle lane, or pedestrian mall on a City street.

6. Neighborhood Impacts. The area representatives, neighborhood board, as well as the area guests, businesses, emergency personnel (fire, ambulance, and police), Oahu Transit Services, Inc. (TheBus and TheHandi-Van), etc., should be kept apprised of the details and status throughout the project and the impacts that the project may have on the adjoining local street area network.

7. Bus Stops. The project site is in the immediate vicinity of bus stops. Please coordinate roadway improvements with DTS – Transportation Mobility Division (TMD). Contact DTS-TMD at TheBusStop@honolulu.gov

8. Disability and Communication Access Board (DCAB). Project plans (vehicular and pedestrian circulation, sidewalks, parking and pedestrian pathways, vehicular ingress/egress, etc.) should be reviewed and approved by DCAB to ensure full compliance with Americans with Disabilities Act requirements.

Should you have any questions, please contact Bartholomew Mikitowicz, of my staff, at (808) 768-6681.

Very truly yours,

J. Roger Morton
Director

PBR HAWAII
& ASSOCIATES, INC.

KIMI MIKAMI YUEN, LEED® AP BD+C
President / Chairperson

VINCENT SHIGEKUNI
Executive Vice-President / Principal

GRANT T. MURAKAMI, AICP, LEED® AP BD+C
Executive Vice-President / Principal

CATIE CULLISON, AICP
Senior Vice-President / Principal

TOM SCHNELL, AICP
Vice-President / Principal

MARC SHIMATSU, PLA, ASLA
Principal

RAYMOND T. HIGA, PLA, ASLA
Associate Principal

DACHENG DONG, LEED® AP
Associate Principal

NATHALIE RAZO
Associate Principal

ANN MIKIKO BOUSLOG, PhD
Director of Land Economics & Real Estate

RAMSAY R. M. TAUM
Cultural Sustainability Planner

ETSUYO KILA
Senior Associate

GREG NAKAI
Senior Associate

BRADLEY FURUYA, AICP
Associate

C.R. 'IMIPONO WICHMAN
Associate

THERESA DEAN
Associate

R. STAN DUNCAN, PLA, ASLA
Chairman Emeritus

RUSSELL Y. J. CHUNG, PLA, FASLA
Principal Emeritus

THOMAS S. WITTEN, FASLA
Principal Emeritus

W. FRANK BRANDT, FASLA
Founding Partner

1001 Bishop Street, Suite 650
Honolulu, Hawai'i 96813-3484
Tel: (808) 521-5631
Fax: (808) 523-1402
E-mail: sysadmin@pbrhawaii.com

printed on recycled paper

January 15, 2026

Mr. J. Roger Morton, Director
Department of Transportation Services
City and County of Honolulu
711 Kapiolani Boulevard, Suite 1600
Honolulu, HI 96813

Attn: Bartholomew Mikitowicz

SUBJECT: PRE-ASSESSMENT CONSULTATION FOR A HRS CHAPTER 343 ENVIRONMENTAL ASSESSMENT (EA) – MILILANI HIGH SCHOOL TEACHER WORKFORCE HOUSING PROJECT, MILILANI, O'AHU, PORTIONS OF TAX MAP KEYS (TMKs) 9-5-001: 017 AND 054

Dear Mr. Morton,

Thank you for your letter dated October 8, 2025, regarding the subject Project. As the planning consultant to Pacific Housing Assistance Corporation (PHAC), which is the developer working with the School Facilities Authority (SFA) on the Mililani High School Teacher Workforce Housing Project, we have reviewed your comments and offer the following responses.

1) **Transportation Impact Assessment** – A traffic impact analysis report (TIAR) will be attached to, and summarized, in the Draft EA.
2) **Transportation Demand Strategies** – The TIAR will include a description of possible alternative transportation usage and TDM strategies.
3) **O'ahu Bike Plan** – The Draft EA will include the information you provided from the O'ahu Bike Plan.
4) **Parking** – The Draft EA will include a discussion regarding off-street parking and site generated parking demand, as well as bicycle parking facilities.
5) **Street Usage Permit** – The Draft EA will note that a Street Usage Permit may be required for the proposed Project.
6) **Neighborhood Impacts** – As recommended, the Applicant (or its representative) will provide periodic updates to the Neighborhood Board when a particular aspect of construction may impact the adjoining street network.
7) **Bus Stops** – We appreciate the information on the proximity of TheBus stop. DTS will be notified of any roadway improvements that might impact that bus stop.
8) **Disability and Communication Access Board (DCAB)** - Project plans will be reviewed and approved by DCAB to ensure full compliance with the Americans with Disabilities Act.

We value your participation in the environmental review process. Your letter and our response will be reproduced in the forthcoming Draft EA.

Sincerely,

PBR HAWAII

Greg Nakai
Senior Associate

cc: Lacey Shimabukuro, PHAC
Karen Arakawa, PHAC

HONOLULU FIRE DEPARTMENT
KA 'OIHANA KINAI AHI O HONOLULU
CITY AND COUNTY OF HONOLULU

636 SOUTH STREET • HONOLULU, HAWAI'I 96813
PHONE: (808) 723-7139 • FAX: (808) 723-7111 • WEBSITE: honolulu.gov

RICK BLANGIARDI
MAYOR
MEIA

SHELDON K. HAO
FIRE CHIEF
LUNA NUI KINAI AHI

JASON SAMALA
DEPUTY FIRE CHIEF
HOPE LUNA NUI KINAI AHI

September 17, 2025

Mr. Greg Nakai, Senior Associate
PBR Hawaii & Associates, Inc.
1001 Bishop Street, Suite 650
Honolulu, Hawai'i 96813-3484

Dear Mr. Nakai:

Subject: Pre-Assessment Consultation Environmental Assessment
Mililani High School Teacher Workforce Housing Project
Tax Map Key: 9-5-001: 054 Portion of

In response to your letter received on September 8, 2025, regarding the abovementioned subject, the Honolulu Fire Department (HFD) reviewed the submitted information and requires that the following be complied with:

1. Fire apparatus access roads shall be provided such that any portion of the facility or any portion of an exterior wall of the first story of the building is located not more than 150 feet (46 meters) from fire apparatus access roads as measured by an approved route around the exterior of the building or facility. (National Fire Protection Association [NFPA] 1; 2021 Edition, Sections 18.2.3.2.2).

   A fire apparatus access road shall extend to within 50 feet (15 meters) of at least one exterior door that can be opened from the outside and that provides access to the interior of the building. (NFPA 1; 2021 Edition, Section 18.2.3.2.1.).

2. Fire apparatus access roads shall be in accordance with NFPA 1, 2021 Edition, Section 18.2.3.

3. An approved water supply capable of supplying the required fire flow for fire protection shall be provided to all premises upon which facilities, buildings, or portions of buildings are hereafter constructed or moved into the jurisdiction. The approved water supply shall be in accordance with NFPA 1, 2021 Edition, Sections 18.3 and 18.4.

4. Civil drawings submitted to your department shall be routed to the HFD for review and approval.

The abovementioned provisions are required by the HFD and may have additional requirements to be met as determined by other agencies.

Should you have questions, please contact Battalion Chief Pao-Chi Hwang of our Fire Prevention Bureau at 808-723-7151 or hfdfpb1@honolulu.gov.

Sincerely,

REID YOSHIDA
Assistant Chief

RY/MD:sk

PBR HAWAII
& ASSOCIATES, INC.

KIMI MIKAMI YUEN, LEED® AP BD+C
President / Chairperson

VINCENT SHIGEKUNI
Executive Vice-President / Principal

GRANT T. MURAKAMI, AICP, LEED® AP BD+C
Executive Vice-President / Principal

CATIE CULLISON, AICP
Senior Vice-President / Principal

TOM SCHNELL, AICP
Vice-President / Principal

MARC SHIMATSU, PLA, ASLA
Principal

RAYMOND T. HIGA, PLA, ASLA
Associate Principal

DACHENG DONG, LEED® AP
Associate Principal

NATHALIE RAZO
Associate Principal

ANN MIKIKO BOUSLOG, PhD
Director of Land Economics & Real Estate

RAMSAY R. M. TAUM
Cultural Sustainability Planner

ETSUYO KILA
Senior Associate

GREG NAKAI
Senior Associate

BRADLEY FURUYA, AICP
Associate

C.R. 'IMIPONO WICHMAN
Associate

THERESA DEAN
Associate

R. STAN DUNCAN, PLA, ASLA
Chairman Emeritus

RUSSELL Y. J. CHUNG, PLA, FASLA
Principal Emeritus

THOMAS S. WITTEN, FASLA
Principal Emeritus

W. FRANK BRANDT, FASLA
Founding Partner

January 15, 2026

Mr. Reid Yoshida
Assistant Chief
Honolulu Fire Department
City and County of Honolulu
636 South Street
Honolulu, HI 96813

Attn: Battalion Chief Pao-Chi Hwang, Fire Prevention Bureau

SUBJECT: PRE-ASSESSMENT CONSULTATION FOR A HRS CHAPTER 343 ENVIRONMENTAL ASSESSMENT – MILILANI HIGH SCHOOL TEACHER WORKFORCE HOUSING PROJECT, MILILANI, O'AHU, PORTIONS OF TAX MAP KEYS (TMKs) 9-5-001: 017 AND 054

Dear Assistant Chief Yoshida,

Thank you for your letter dated September 17, 2025, regarding the subject Project. As the planning consultant to Pacific Housing Assistance Corporation (PHAC), which is the developer working with the School Facilities Authority (SFA) on the Mililani High School Teacher Workforce Housing Project, we appreciate the information provided regarding the fire apparatus access roads, water supply capacity for the required fire flow for fire protection, and that civil drawings should be routed to the HFD for review and approval.

We value your participation in the environmental review process. Your letter and our response will be reproduced in the forthcoming Draft Environmental Assessment (EA).

Sincerely,

PBR HAWAII

Greg Nakai
Senior Associate

cc: Lacey Shimabukuro, PHAC
Karen Arakawa, PHAC

1001 Bishop Street, Suite 650
Honolulu, Hawai'i 96813-3484
Tel: (808) 521-5631
Fax: (808) 523-1402
E-mail: sysadmin@pbrhawaii.com

printed on recycled paper

(This page intentionally left blank.)

HONOLULU POLICE DEPARTMENT
KA 'OIHANA MĀKA'I O HONOLULU
CITY AND COUNTY OF HONOLULU
801 SOUTH BERETANIA STREET • HONOLULU, HAWAI'I 96813
TELEPHONE: (808) 529-3111 • WEBSITE: www.honolulupd.org

RICK BLANGIARDI
MAYOR
MEIA

RADE K. VANIC
INTERIM CHIEF
KAHU MĀKA'I KŪIKAWĀ

AARON TAKASAKI-YOUNG
RYAN T. NISHIBUN
INTERIM DEPUTY CHIEFS
NĀ HOPE LUNA NUI MĀKA'I KŪIKAWĀ

OUR REFERENCE EO-SH

September 18, 2025

SENT VIA EMAIL

Mr. Greg Nakai
gnakai@pbrhawaii.com

Dear Mr. Nakai:

This is in response to your correspondence of September 5, 2025, requesting input for the Pre-Assessment Consultation, Environmental Assessment for the Mililani High School Teacher Workforce Housing Project.

Based on the information provided, the Honolulu Police Department recommends providing adequate notice to area residents and businesses prior to any road closures, as any impact to pedestrian and/or vehicular traffic could lead to complaints.

If there are any questions, please call Major James Slayter of District 2 (Mililani, Wahiawā) at (808) 723-8700.

Sincerely,

GLENN HAYASHI
Assistant Chief of Police
Support Services Bureau

PBR HAWAII
& ASSOCIATES, INC.

KIMI MIKAMI YUEN, LEED® AP BD+C
President / Chairperson

VINCENT SHIGEKUNI
Executive Vice-President / Principal

GRANT T. MURAKAMI, AICP, LEED® AP BD+C
Executive Vice-President / Principal

CATIE CULLISON, AICP
Senior Vice-President / Principal

TOM SCHNELL, AICP
Vice-President / Principal

MARC SHIMATSU, PLA, ASLA
Principal

RAYMOND T. HIGA, PLA, ASLA
Associate Principal

DACHENG DONG, LEED® AP
Associate Principal

NATHALIE RAZO
Associate Principal

ANN MIKIKO BOUSLOG, PhD
Director of Land Economics & Real Estate

RAMSAY R. M. TAUM
Cultural Sustainability Planner

ETSUYO KILA
Senior Associate

GREG NAKAI
Senior Associate

BRADLEY FURUYA, AICP
Associate

C.R. 'IMIPONO WICHMAN
Associate

THERESA DEAN
Associate

R. STAN DUNCAN, PLA, ASLA
Chairman Emeritus

RUSSELL Y. J. CHUNG, PLA, FASLA
Principal Emeritus

THOMAS S. WITTEN, FASLA
Principal Emeritus

W. FRANK BRANDT, FASLA
Founding Partner

January 15, 2026

Mr. Glenn Hayashi
Assistant Chief of Police
Honolulu Police Department
City and County of Honolulu
801 South Beretania Street
Honolulu, HI 96813

Attn: Major James Slayter, District 2 (Mililani, Wahiawā)

SUBJECT: PRE-ASSESSMENT CONSULTATION FOR A HRS CHAPTER 343 ENVIRONMENTAL ASSESSMENT – MILILANI HIGH SCHOOL TEACHER WORKFORCE HOUSING PROJECT, MILILANI, O'AHU, PORTIONS OF TAX MAP KEYS (TMKs) 9-5-001: 017 AND 054

Dear Assistant Chief of Police Hayashi,

Thank you for your letter (reference EO-SH) dated September 18, 2025, regarding the subject Project. As the planning consultant to Pacific Housing Assistance Corporation (PHAC), which is the developer working with the School Facilities Authority (SFA) on the Mililani High School Teacher Workforce Housing Project, we appreciate the recommendation provided regarding providing adequate notice to area residents and businesses prior to any road closures – to minimize complaints.

We value your participation in the environmental review process. Your letter and our response will be reproduced in the forthcoming Draft Environmental Assessment (EA).

Sincerely,

PBR HAWAII

Greg Nakai
Senior Associate

cc: Lacey Shimabukuro, PHAC
Karen Arakawa, PHAC

1001 Bishop Street, Suite 650
Honolulu, Hawai'i 96813-3484
Tel: (808) 521-5631
Fax: (808) 523-1402
E-mail: sysadmin@pbrhawaii.com

printed on recycled paper

HOUSE OF REPRESENTATIVES

Hale o nā Luna Maka'āinana

STATE OF HAWAI'I
STATE CAPITOL
415 SOUTH BERETANIA STREET
HONOLULU, HAWAI'I 96813

September 23, 2025

Greg Nakai
PBR Hawaii & Associates, Inc.
1001 Bishop Street, Suite 650
Honolulu, HI 96813-3484

Re: Support for Proposed Mililani High School Teacher Workforce Housing Project

Dear Mr. Nakai,

As the State Representative for House District 37 – portions of Mililani Town, Mililani Mauka, Koa Ridge, and Waipi'o Gentry, I am writing to express my strong support for the proposed Mililani High School Teacher Workforce Housing Project.

Affordable housing for teachers and education staff is a pressing need in our community and across Hawai'i. Every year, we face more than 2,000 teacher shortages, and according to DOE data shared by to our office from a recent survey, Mililani is the #1 most desired community on O'ahu to live. Too often, talented and dedicated educators leave the profession—or leave our islands altogether—because they cannot afford to live where they work. This project represents a meaningful step toward addressing that challenge by providing stable and affordable housing options directly within the Mililani and surrounding Central Oahu community.

By prioritizing licensed teachers, educators, and Department of Education staff, this project will not only help us retain qualified professionals in our classrooms but also strengthen the connection between educators and the families they serve. These are the reasons I introduced and pushed for the passage of HB329, (Act 204), and secured $2 million in funding for this project. This is a very large and important initiative, setting the precedent for all future teacher housing projects across the state. I believe this effort will have a lasting positive impact on Mililani High School and our broader school system.

I also want to note that a crosswalk is planned at the intersection of Hikikauila Street and Meheula Parkway and is currently in the design and planning phase by the City and County of Honolulu, Department of Transportation Services. I encourage consideration of this planned improvement as part of the assessment of project impacts and neighborhood connectivity.

Mahalo for your work in advancing this important project. I look forward to continuing to support efforts that provide solutions to our housing and education challenges. If you any questions, please do not hesitate to contact me at replachica@capitol.hawaii.gov or at 808-568-6150.

Sincerely,

Trish LaChica

Representative Trish La Chica
Assistant Majority Floor Leader
Vice Chair, House Committee on Education
Hawai'i State House of Representatives

PBR HAWAII
& ASSOCIATES, INC.

KIMI MIKAMI YUEN, LEED® AP BD+C
President / Chairperson

VINCENT SHIGEKUNI
Executive Vice-President / Principal

GRANT T. MURAKAMI, AICP, LEED® AP BD+C
Executive Vice-President / Principal

CATIE CULLISON, AICP
Senior Vice-President / Principal

TOM SCHNELL, AICP
Vice-President / Principal

MARC SHIMATSU, PLA, ASLA
Principal

RAYMOND T. HIGA, PLA, ASLA
Associate Principal

DACHENG DONG, LEED® AP
Associate Principal

NATHALIE RAZO
Associate Principal

ANN MIKIKO BOUSLOG, PhD
Director of Land Economics & Real Estate

RAMSAY R. M. TAUM
Cultural Sustainability Planner

ETSUYO KILA
Senior Associate

GREG NAKAI
Senior Associate

BRADLEY FURUYA, AICP
Associate

C.R. 'IMIPONO WICHMAN
Associate

THERESA DEAN
Associate

R. STAN DUNCAN, PLA, ASLA
Chairman Emeritus

RUSSELL Y. J. CHUNG, PLA, FASLA
Principal Emeritus

THOMAS S. WITTEN, FASLA
Principal Emeritus

W. FRANK BRANDT, FASLA
Founding Partner

January 15, 2026

The Honorable Trish La Chica
House of Representatives
State of Hawai'i
State Capitol
415 South Beretania Street, Room 441
Honolulu, HI 96813

SUBJECT: PRE-ASSESSMENT CONSULTATION FOR A HRS CHAPTER 343 ENVIRONMENTAL ASSESSMENT – MILILANI HIGH SCHOOL TEACHER WORKFORCE HOUSING PROJECT, MILILANI, O'AHU, PORTIONS OF TAX MAP KEYS (TMKs) 9-5-001: 017 AND 054

Dear Representative La Chica:

Thank you for your letter dated September 23, 2025, regarding the subject Project. As the planning consultant to Pacific Housing Assistance Corporation (PHAC), which is the developer working with the School Facilities Authority (SFA) on the Mililani High School Teacher Workforce Housing Project, we appreciate your expression of strong support for the proposed Project, and for the passage of HB 329 (Act 204). We also appreciate the information you provided about the planned crosswalk at the intersection of Hikikauila Street and Meheula Parkway, and we have shared that information with the project traffic engineering consultant.

We value your participation in the environmental review process. Your letter and our response will be reproduced in the forthcoming Draft Environmental Assessment (EA).

Sincerely,

PBR HAWAII

Greg Nakai
Senior Associate

cc: Lacey Shimabukuro, PHAC
Karen Arakawa, PHAC

1001 Bishop Street, Suite 650
Honolulu, Hawai'i 96813-3484
Tel: (808) 521-5631
Fax: (808) 523-1402
E-mail: sysadmin@pbrhawaii.com

printed on recycled paper

MILILANI/ WAIPIʻO/ MELEMANU NEIGHBORHOOD BOARD NO. 25

NEIGHBORHOOD COMMISSION • 925 DILLINGHAM BOULEVARD, SUITE 160 • HONOLULU, HAWAIʻI 96817
PHONE (808) 768-3710 • FAX (808) 768-3711 • WEBSITE: honolulu.gov

October 5, 2025

PBR Hawaiʻi & Associates, Inc.
Attn: Greg Nakai
1001 Bishop Street, Suite 650
Honolulu, HI 96813-3484
Via email: gnakai@pbrhawaii.com

Subject: Community & Mililani Neighborhood Board Comments on Pre-Consultation for HRS Chapter 343 Environmental Assessment – Mililani High School Teacher Workforce Housing Project, Mililani Oʻahu
Tax Map Key (TMK) 9-5-001:054 Portion of

Aloha Mr. Nakai,

Mahalo for the opportunity to provide pre-assessment consultation comments on the proposed Mililani High School (MHS) Teacher Workforce Housing project. As Chair of the Mililani-Waipiʻo-Melemanu Neighborhood Board No. 25, I write to share community priorities and requests to guide scoping of the HRS Chapter 343 Draft Environmental Assessment (EA). Our goal is to support quality teacher housing that is compatible with school operations, neighborhood safety, and Mililani's character and quality of life.

Community Feedback, Priorities & EA Scoping Requests:

1) Genuine Community Engagement & Transparency

- Hold at least two public meetings in Mililani (one during scoping and one on the Draft EA), with clear visuals (site plan, elevations, traffic/parking diagrams), and publish project details, slides, and FAQs online.
- Provide a plain-language project fact sheet summaries of unit count/mix, rent targets by AMI (with an explanation of AMI cost thresholds), parking supply, traffic management, construction schedule, and point-of-contact.

2) Need, Program, and Equity

- Quantify housing demand among teachers and education staff of their preference to live in the Mililani area, and demonstrate that the proposed unit mix (studios, 1-BR, 2-BR) matches local household sizes.
- Define rent bands (e.g., ≤60% / 80% / 100% AMI) with monthly rent assumptions compared to typical DOE salaries and take-home pay.
- Clarify eligibility, prioritization, and limits (e.g., teachers, probationary teachers, aides, HIDOE staff, others).
- Explain how house rules addressing weapons/firearm ownership, alcohol, tobacco, medicinal cannabis, and prohibitions on illegal drug activity will be enforced consistent with fair-housing laws and all applicable public school and State property policies, prohibitions, and statutes.
- Specify how the project will ensure teachers receive first priority for units—consistent with the project's purpose—before extending eligibility in a defined "waterfall" order (e.g., teachers, aides, other HIDOE staff). Describe the tenant-priority "waterfall," eligibility verification, fair-housing compliance, and an appeals process to maintain this prioritization over time.

3) Site Planning, Safety, and School Operations

- Show the precise 1.7-acre footprint, loading zones, and emergency access; coordinate with HFD for apparatus access and turning radii.

- Describe separation of student/parent pick-up/drop-off from resident traffic; apply CPTED principles and design (lighting, sightlines, access control).
- Provide a school-day/after-hours circulation plan for events (athletic games, concerts/band, community fairs and parades) do not conflict with resident/visitor traffic and parking.
- Identify safe walking routes and enhanced crossings to campus, bus stops, the Mililani Town Center, the Mililani Transit Center, and the Mililani Shopping Center; include ADA-compliant paths, curb ramps, and lighting.
- Demonstrate that the project's architecture, site plan, materials, colors, massing, and landscaping are compatible with Mililani Town's design standards, aesthetics, and neighborhood character, honoring the community's status as Hawaiʻi's first master-planned community and the state's only All-America City.

4) Traffic, Parking, and Mobility (Peak-Sensitive)

- Prepare a Traffic Impact Analysis using current counts collected during the school year (AM/PM peaks and pedestrian access and peaks). Evaluate, at a minimum, Meheʻula Parkway, Anania Drive, the MHS access drives, and the Mililani Post Office area, as well as the Meheʻula Pkwy/Kamehameha Hwy and Meheʻula Pkwy/Anania Dr intersections, and U-turn movements on Meheʻula Pkwy.
- Analyze AM/PM peaks, athletics (football, baseball, soccer, softball, etc.), stadium/gym events, community fairs, and weekends; include on-campus queueing.
- Study parking demands differentiating residents, guests, staff, and school/event users; evaluating shared-parking strategies with enforceable management (permits, time limits).
- Include multimodal transportation opportunities (transit incentives, secure bike storage, car-share stalls, unbundled parking, etc.).

5) Drainage, Stormwater, and Green Infrastructure

- Provide a pre-/post-development hydrology analysis; ensure no net increase in downstream runoff and identify receiving drainage/outfalls.
- Integrate Low-Impact Development features (bioretention, permeable paving, green roofs/planters, on-site detention) sized for design storms; include native landscaping, and an operations and maintenance plan with funding responsibility.

6) Utilities, Energy, and Sustainability

- Confirm utility (water, sewer, power) capacities and any required upgrades, address reliability and resilience.
- Include high-efficiency, preferably all-electric design; PV, solar hot water, high-efficiency HVAC, EV charging, and comprehensive water/energy conservation measures (ENERGY STAR/ EPA WaterSense certified fixtures, plumbing fixtures, and appliances, whole-building leak detection, and drought-tolerant native landscaping), supporting:
    - HRS §302A-1510 (Public Schools Net-Zero by 2035)
    - HRS §269-92 (100% renewable energy by 2045)
    - HRS §174C-31(g)(6) (100% reclaimed water in State/County facilities by 2045)
- Use bird-safe, shielded, warm-spectrum, Dark-Sky-compliant lighting; include leak detection and drought-tolerant native species.

7) Cultural, Historic, and Environmental Resources

- Consult with SHPD and community stakeholders; include archaeological monitoring, if necessary.
- Summarize consultation outcomes and mitigation/interpretation commitments.
- Provide a native species and tree protection/replacement plan (canopy no-net-loss).

8) Public Safety & Emergency Preparedness

- Describe how the facility is designed to withstand and remain operational during hazardous events including: hurricanes, Kona low events, earthquakes, other severe wind and precipitation events, flooding, heatwave, wildfire, and drought.
- Provide a site-specific emergency response plan coordinated with MHS administration (lockdown coordination, evacuation routes, shelter-in-place).
- Include clear wayfinding for first responders and ensure redundant access where feasible.

9) Property Management, Security, and Community Interface

- Identify the property manager, staffing model, after-hours security, and house rules (parking, trash, noise, pets).
- Provide mail/package management and right-sized waste, recycling, and green-waste enclosures.
- Indicate whether a preschool/child-care (e.g., Ready Keiki) is planned on site and who may be eligible.

10) Alternatives & Cumulative Effects

- Address cumulative effects with other foreseeable Central Oʻahu projects (traffic, infrastructure, and MHS campus projects to include but not limited to: parking lot relocation, pedestrian and ADA access to the 5,000 seat stadium, walkway realignments, covered play courts, and portable classroom replacements).

11) Community Benefits & Mitigation Commitments

- Consider funding or in-kind support for Safe Routes to School, crosswalk upgrades, traffic calming, increasing shade trees/canopy, and shielded campus security lighting.
- Describe ongoing good-neighbor practices for operations, repair/maintenance, and community collaboration by the property management.

The Mililani-Waipiʻo-Melemanu Neighborhood Board #25 supports well-planned, genuinely affordable teacher housing that serves Hawaiʻi's educators and strengthens our schools and community. Please review the attached Mililani-Waipiʻo-Melemanu Neighborhood Board Resolution, address the concerns identified, and incorporate the items above into the Draft EA. We also request that the Draft EA thoroughly address the items above and that SFA & Pacific Housing present project updates at an upcoming Neighborhood Board meeting to ensure continued public dialogue.

Please include this letter (and the attached resolution) in the Draft EA record. I'm available to coordinate next steps and to help schedule your public presentation in Mililani. Please feel free to contact me with any questions, concerns, or comments.

Mahalo for your consideration.

Respectfully,

Danielle M. M. Bass
Chair, Mililani-Waipiʻo-Melemanu Neighborhood Board No. 25

Attachment

MILILANI/ WAIPIʻO/ MELEMANU NEIGHBORHOOD BOARD NO. 25

NEIGHBORHOOD COMMISSION • 925 DILLINGHAM BOULEVARD, SUITE 160 • HONOLULU, HAWAIʻI 96817
PHONE (808) 768-3710 • FAX (808) 768-3711 • WEBSITE: www.honolulu.gov

SUPPORTING THE AFFORDABLE TEACHER WORKFORCE HOUSING PROJECT ON MILILANI HIGH SCHOOL AND RECOMMENDING THE PROJECT BE RELOCATED TO THE "PREFERRED SITE" AT THE INTERSECTION OF MEHEULA PARKWAY AND ANANIA DRIVE

WHEREAS, Hawaiʻi has faced a persistent shortage of licensed teachers for many years, driven largely by the high cost of living, underscoring the need for financial incentives and affordable housing to attract and retain educators; and

WHEREAS, in response to this shortage, the State of Hawaiʻi created the Hawaiʻi School Facilities Authority (HISFA) in 2020, and in July 2023, authorized a pilot workforce housing project at one of three Department of Education schools—Mililani High School (MHS), Nānākuli High School, or Waipahu High School—to provide affordable housing for teachers; and

WHEREAS, the HISFA identified MHS as the site for the pilot project in 2023, recommending a “preferred site” on the lower campus near the Meheula Parkway and Anania Drive intersection, adjacent to the football stadium; and

WHEREAS, in December 2023, the HISFA issued a Request for Proposal (RFP) under solicitation number RFP-SFA-23-01 for a public-private partnership to design, build, finance, operate, and maintain the teacher workforce housing project at MHS. The RFP offered a 65-year lease of the land to the selected developer, contingent on the transfer of land ownership from the State Department of Education to the HISFA, and included the "preferred site" and two additional campus locations, while allowing developers to propose alternative sites; and

WHEREAS, in August 2024, the HISFA selected Pacific Housing Assistance Corporation, a nonprofit housing initiative, as the developer for the public-private partnership. The proposal included a 109-unit, multistory workforce housing complex with a single driveway for entry and exit for 153 parking stalls on the MHS agriculture lot—a site not previously discussed with the school or community. Located at the busy intersection of Hoʻokelewaʻa Street and Meheula Parkway, directing all traffic onto Hoʻokelewaʻa Street, a narrow two-lane road; and

WHEREAS, Hoʻokelewaʻa Street has long been known for traffic congestion and frequent accidents in the Mililani community. A 2015 traffic study by the City and County of Honolulu’s Department of Transportation Services (DTS) identified it as a key access road for a large residential area, Mililani Waena Elementary School, and MHS. The study highlighted severe congestion during school arrival and departure times, with heavy vehicle and pedestrian traffic causing long queues in all directions. Between 2007 and 2014, eight accidents were recorded at Hoʻokelewaʻa Street intersections, including one bike accident at Meheula Parkway. From 2015 to 2024, DTS reported 13 minor accidents and six major accidents, including property damage, damage to parked cars, a pedestrian struck in a crosswalk, a broadside collision caused by a red-light runner, and a rear-end collision; and

WHEREAS, at the October 2024 Mililani-Waipiʻo-Melemanu Neighborhood Board #25 meeting, the HISFA introduced itself to the Mililani community and presented its preliminary proposal for the planned development. At this hybrid meeting, attended by over 117 community members, testimony from more than 30 residents was received. Testifiers expressed concerns about the proposed location at Hoʻokelewaʻa Street and Meheula Parkway, citing existing traffic issues, the disruption of the 33-year-old agricultural program on the agricultural lot, and the lack of prior community consultation on the site selection, which was not recommended by MHS; and

WHEREAS, after the October 2024 Mililani-Waipiʻo-Melemanu Neighborhood Board #25 meeting, the HISFA held five additional presentations to gather feedback: one with MHS staff on November 13, three with the Mililani community on November 14, 16, and 18, and one with MHS's School Community Council on November 19. Participants reiterated concerns from the October meeting, including traffic issues and the impact on the agricultural lot and its programs. A general preference was also expressed for relocating the workforce housing project to the original "preferred site" near the Meheula Parkway and Anania Drive intersection, adjacent to the football stadium; now, therefore be it

RESOLVED, that the Mililani-Waipiʻo-Melemanu Neighborhood Board #25 strongly supports the development of affordable workforce housing for teachers, and appreciates the Pacific Housing Assistance Corporation's elegant renderings and design, which align with the community's aesthetic; provided that the Mililani community continues to be involved, engaged, and regularly updated on the site's location and the implementation of the project; and be it further

RESOLVED, that the Mililani-Waipiʻo-Melemanu Neighborhood Board #25 strongly urges the HISFA and Pacific Housing Assistance Corporation to relocate the proposed workforce housing project to the "preferred site" near the Meheula Parkway and Anania Drive intersection, adjacent to the football stadium, while ensuring that plans for MHS's proposed performing arts facility are carefully reviewed and considered for relocation elsewhere on campus; and be it so

ORDERED, that copies of this resolution be transmitted to the Governor and Lieutenant Governor of the State of Hawaiʻi, area legislators, the Superintendent of the Hawaiʻi Department of Education, the Hawaiʻi Schools Facility Authority and its board members, the Mayor of the City and County of Honolulu, all Honolulu City Council members, the City and County of Honolulu's Planning and Economy Committee, the City and County of Honolulu's Department of Planning and Permitting, the City and County of Honolulu's Department of Transportation Services, the City and County of Honolulu's Board of Water Supply, the City and County of Honolulu's Office of Housing, the Mililani High School, Mililani Waena Elementary School, the Hawaiʻi State Teachers Association, the Mililani Town Association, the Town Center of Mililani, all members of the Mililani Mauka/Launani Valley Neighborhood Board No. 35; and all neighborhood board chairs.

The Mililani-Waipiʻo-Melemanu Neighborhood Board No. 25
ADOPTED this resolution by vote of 15-0-4
at the Wednesday, November 27, 2024 Regular Meeting.

Submitted By: _____

Danielle M. M. Bass, Board Chair

(This page intentionally left blank.)

PBR HAWAII
& ASSOCIATES, INC.

KIMI MIKAMI YUEN, LEED® AP BD+C
President / Chairperson

VINCENT SHIGEKUNI
Executive Vice-President / Principal

GRANT T. MURAKAMI, AICP, LEED® AP BD+C
Executive Vice-President / Principal

CATIE CULLISON, AICP
Senior Vice-President / Principal

TOM SCHNELL, AICP
Vice-President / Principal

MARC SHIMATSU, PLA, ASLA
Principal

RAYMOND T. HIGA, PLA, ASLA
Associate Principal

DACHENG DONG, LEED® AP
Associate Principal

NATHALIE RAZO
Associate Principal

ANN MIKIKO BOUSLOG, PhD
Director of Land Economics & Real Estate

RAMSAY R. M. TAUM
Cultural Sustainability Planner

ETSUYO KILA
Senior Associate

GREG NAKAI
Senior Associate

BRADLEY FURUYA, AICP
Associate

C.R. 'IMIPONO WICHMAN
Associate

THERESA DEAN
Associate

R. STAN DUNCAN, PLA, ASLA
Chairman Emeritus

RUSSELL Y. J. CHUNG, PLA, FASLA
Principal Emeritus

THOMAS S. WITTEN, FASLA
Principal Emeritus

W. FRANK BRANDT, FASLA
Founding Partner

1001 Bishop Street, Suite 650
Honolulu, Hawai'i 96813-3484
Tel: (808) 521-5631
Fax: (808) 523-1402
E-mail: sysadmin@pbrhawaii.com

printed on recycled paper

January 15, 2026

Ms. Danielle M. M. Bass
Chair
Mililani-Waipi'o-Melemanu Neighborhood Board No. 25
Neighborhood Commission
925 Dillingham Boulevard, Suite 160
Honolulu, HI 96817

SUBJECT: PRE-ASSESSMENT CONSULTATION FOR A HRS CHAPTER 343 ENVIRONMENTAL ASSESSMENT (EA) – MILILANI HIGH SCHOOL TEACHER WORKFORCE HOUSING PROJECT, MILILANI, O'AHU, PORTIONS OF TAX MAP KEYS (TMKs) 9-5-001: 017 AND 054

Dear Ms. Bass,

Thank you for your letter dated October 5, 2025, regarding the subject Project, and the resolution by Neighborhood Board No. 25 (NB25) supporting the proposed Project's location near the intersection of Meheula Parkway and Anania Drive. We also greatly appreciate the statement that "*The Mililani-Waipi'o-Melemanu Neighborhood Board #25 supports well-planned, genuinely affordable teacher housing that serves Hawai'i's educators and strengthens our schools and community.*"

We have reviewed your comments and offer the following responses:

1) **Genuine Community Engagement & Transparency** – PHAC held a public meeting at Mililani High School on November 13, 2024, and provided multiple updates as project design progressed in 2025, including a presentation to NB25 on August 27, 2025. PHAC then shared renderings of the new design at the NB25 meeting on November 19, 2025. Project information is available on the School Facilities Authority (SFA) website and PHAC will continue to coordinate with the SFA on sharing information at neighborhood board meetings.

2) **Need, Program and Equity** – The Draft EA will discuss housing demand as reported in the 2025 Department of Education employee housing study. Information on estimated rents, tenant eligibility and prioritization will be shared separately from the Draft EA when project financing is determined. Income limits by family size and affordable rents by percentage of area median income are established by the U.S. Department of Housing and Urban Development and updated each year. PHAC and SFA will develop a fair and equitable process to accommodate as many teachers as possible. The property manager hired by PHAC will manage the applicant pool based on an agreed upon criterion. If there are more applicants than units available, a lottery will be conducted to place eligible applicants. The property manager will maintain a wait list as well as develop house rules for the project.

3) **Site Planning, Safety and School Operations** – The Draft EA will include a preliminary site plan showing the Project site footprint, emergency access, and separation from student pick-up/drop-off. The proposed new entry drive located off Meheula Parkway will provide a separate access for residents, and the Project's internal circulation will be via a looping driveway within the site that is separate from the school's. Crime Prevention Through Environmental Design (CPTED) principles will be considered during design. The Project's property manager will coordinate with the school for events that may have an impact on the housing and its residents. The Transportation Impact Assessment Report (TIAR) prepared

for the Draft EA discusses pedestrian, bicycle, and public transit facilities in the vicinity. The Mililani Town Association (MTA) has confirmed with the SFA that State land is beyond the purview of the MTA; however, the developer will consider MTA design rules.

4) **Traffic, Parking, and Mobility (Peak-Sensitive)** – The Draft EA will summarize and include a Transportation Impact Assessment Report (TIAR).

5) **Drainage, Stormwater, and Green Infrastructure** – The Draft EA will include a civil engineering due diligence report addressing pre- and post-development drainage quantities, as well as Low-Impact Development features.

6) **Utilities, Energy, and Sustainability** – The civil engineering due diligence report will confirm utility capacities. The Draft EA will also address the Project’s proposed energy efficiency and sustainable design features.

7) **Cultural, Historic, and Environmental Resources** – PHAC has retained a professional archaeological/cultural consultant to consult with SHPD and community stakeholders. The Draft EA will summarize the findings of the archaeological and cultural studies and will also address the replacement of existing canopy trees with native species.

8) **Public Safety & Emergency Preparedness** – To the extent possible, the Draft EA will describe the Project’s resiliency design features. The Draft EA will also state that, at the appropriate stage in the development process, the Project’s property manager will work with Mililani High School on a site-specific emergency response plan, since the details of the building have not yet been finalized. Wayfinding signage and evacuation routes will be posted at appropriate locations on the site.

9) **Property Management, Security, and Community Interface** – The Draft EA will address property management issues. A preschool/childcare will not be provided onsite.

10) **Alternatives & Cumulative Effects** – The Draft EA will address cumulative effects with other known Central O‘ahu projects.

11) **Community Benefits & Mitigation Measures** – The Draft EA will address possible community benefits and mitigation measures.

We value your participation in the environmental review process. Your letter and our response will be reproduced in the forthcoming Draft EA.

Sincerely,

PBR HAWAII

Greg Nakai
Senior Associate

cc: Lacey Shimabukuro, PHAC
Karen Arakawa, PHAC

From:	Donaldson, James A
To:	Greg Nakai
Subject:	Mililani High school Teacher workforce housing project
Date:	Tuesday, September 9, 2025 2:26:53 PM
Attachments:	image001.jpg Contractor Notes 2025 03 27.pdf CATV map of project area.pdf

---

Warning: Unusual sender <james.donaldson@charter.com>
You don't usually receive emails from this address. Make sure you trust this sender before taking any actions.

Aloha Greg,

RE: Mililani High school Teacher workforce housing project

Thank you for the opportunity to review and comment on the proposed construction Project. According to our drawings. We should not be affected by the proposed work. We have underground equipment nearby. The locations of existing CATV pull-boxes, duct routes, aerial routes, and crossings are shown on the provided plans. SPECTRUM is submitting drawings with information on the facilities within the project area. Please note these drawings are to be used for reference only. The exact locations, depth and routing of all underground CATV facilities must be verified in the field due to construction variances. In any case toning through the One Call Center will identify our facilities in the immediate area. At this time, SPECTRUM occupies both CATV and Hawaiian Telcom's (HTCO) duct systems.

This information has been provided to help minimize delays and prevent damage to existing CATV structures within the project area. Should you have any questions or concerns, please feel free to contact me at 808-292-7721, or email me at James.Donaldson@charter.com

Attached: asbuilt map of requested areas(1 pdf)

Our Contractors notes

Thank you,

James Donaldson | OSP Engineering | Construction Coordinator
151 Pali'i St , Mililani Hi 96789
T: 808-292-7721
E: james.donaldson@charter.com

The contents of this e-mail message and any attachments are intended solely for the addressee(s) and may contain confidential and/or legally privileged information. If you are not the intended recipient of this message or if this message has been addressed to you in error, please immediately alert the sender by reply e-mail and then delete this message and any attachments. If you are not the intended recipient, you are notified that any use, dissemination, distribution, copying, or storage of this message or any attachment is strictly prohibited.

GENERAL CONTRACTOR'S NOTES:

1. ***THE CONTRACTOR SHALL PROCURE AND PAY FOR ALL LICENSES AND PERMITS AND SHALL GIVE ALL NOTICES NECESSARY AND INCIDENT TO THE DUE AND LAWFULL PROSECUTION OF THE WORK.***

2. ***THE LOCATIONS OF EXISTING UTILITIES ARE APPROXIMATE ONLY. THE CONTRACTOR SHALL VERIFY THEIR LOCATIONS AND SHALL BE RESPONSIBLE FOR ANY DAMAGES TO THESE UTILITIES AS A RESULT OF THEIR OPERATIONS. ADJUSTMENTS TO THE NEW DUCTLINE ALIGNMENT, IF REQUIRED, SHALL BE MADE TO PROVIDE THE REQUIRED CLEARANCES.***

3. ***THE CONTRACTOR SHALL BRACE ALL POLES OR LIGHT STANDARDS NEAR THE NEW DUCTLINE, MANHOLE OR HANDHOLE DURING ITS OPERATIONS.***

4. ***THE CONTRACTOR SHALL SAW-CUT A.C. PAVEMENT, CONCRETE GUTTER, AND CONCRETE SIDEWALK WHEREVER NEW MANHOLES, HANDHOLES, PULLBOXES OR DUCTLINES ARE TO BE PLACED AND SHALL RESTORE TO EXISTING CONDITION OR BETTER.***

5. ***THE UNDERGROUND PIPES, CABLES, OR DUCTLINES KNOWN TO EXIST BY THE ENGINEER FROM THEIR SEARCH OF RECORDS ARE INDICATED ON THE PLANS. THE CONTRACTOR SHALL VERIFY THE LOCATIONS AND DEPTHS OF THE FACILITIES AND EXERCISE PROPER CARE IN EXCAVATING IN THE AREAS. WHEREVER CONNECTIONS OF NEW UTILITIES TO EXISTING UTILITIES ARE SHOWN ON THE PLANS, THE CONTRACTOR SHALL EXPOSE THE EXISTING LINES AT THE PROPOSED CONNECTIONS TO VERIFY THEIR LOCATIONS AND DEPTHS PRIOR TO EXCAVATION FOR THE NEW LINES.***

6. ***THE CONTRACTOR, AT THEIR OWN EXPENSE, SHALL KEEP THE PROJECT AND SURROUNDING AREA FREE FROM DUST NUISANCE. THE COST FOR SUPLEMENTARY MEASURES, WHICH WILL BE REQUIRED BY THE CITY AND COUNTY, SHALL BE BORNE BY THE CONTRACTOR.***

7. ***THE CONTRACTOR, AT THEIR OWN EXPENSE, SHALL KEEP THE PROJECT AREA FREE FROM DUST NUISANCE. THE WORK SHALL BE IN CONFORMANCE WITH THE AIR POLUTION CONTROL STANDARDS AND REGULATIONS OF THE STATE OF HAWAII, DEPARTMENT OF HEALTH.***

8. ***PRIOR TO THE EXCAVATION OF THE DUCTLINE, THE CONTRACTOR SHALL REQUEST THAT SPECTRUM OCEANIC CABLE COMPANY TO LOCATE EXISTING DUCTLINE WHEREVER REQUIRED.***

9. ***THE CONTRACTOR SHALL TAKE NECESSARY PRECAUTION NOT TO DAMAGE EXISTING CABLES OR DUCTS. ANY WORK INVOLVING EXISTING CABLES OR DUCTS SHALL BE DONE IN THE PRESENCE OF THE SPECTRUM OCEANIC COORDINATOR OR THEIR REPRESENTATIVE. TEMPORARY CABLE AND DUCT SUPPORT SHALL BE PROVIDED WHEREVER NECESSARY.***

10. ***THE CONTRACTOR SHALL NOTIFY FOR SPECTRUM OCEANIC INSPECTION 72 HOURS PRIOR TO THE START OF WORK ON CATV INFRASTRUCTURE, POURING CONCRETE, OR BACKFILLING. FOR SCHEDULING CONTACT JEFF MAEDA: JEFF.MAEDA@CHARTER.COM , 808-625-8520.***

11. ***WHEREVER CONNECTIONS TO EXISTING UTILITIES ARE SHOWN ON THE PLANS, THE CONTRACTOR SHALL EXPOSE THE EXISTING LINES PRIOR TO EXCAVATION OF THE MAIN TRENCHES TO VERIFY THEIR LOCATIONS AND DEPTHS.***

12. ***CONTRACTOR SHALL PROVIDE ALL MATERIALS AND FURNISH ALL LABOR AND EQUIPMENT NECESSARY TO INSTALL THE DUCTLINE IN PLACE COMPLETE.***

13. ***THE CONTRACTOR SHALL BE RESPONSIBLE FOR LAYING OUT ALL REQUIRED LINES AND GRADES AND SHALL PRESERVE ALL BENCHMARKS AND WORKING POINTS NECESSARY TO LAY OUT THE WORK CORRECTLY. THE NEW DUCTLINE SHALL BE ADJUSTED BY THE CONTRACTOR TO SUIT THE EXISTING CONDITIONS AND THE DETAILS AS DESCRIBED IN THE PLANS.***

14. ***THE LOCATION OF CATV FACILITIES SHOWN ON PLANS ARE FROM EXISTING RECORDS WITH VARYING DEGREES OF ACCURACY AS TO ITS ACTUAL FIXED LOCATION. THE CONTRACTOR SHALL USE EXTREME CAUTION WHEN WORKING IN CLOSE PROXIMITY OF CATV FACILITIES.***

15. ***THE CONTRACTOR SHALL OBTAIN EXCAVATION PERMIT CLEARANCE FROM SPECTRUM OCEANIC'S ENGINEERING SECTION LOCATED AT 200 AKAMAINUI ST., MILILANI TECH PARK.***

16. ***FOR ANY FIELD ASSISTANCE OR VERIFICATION OF CATV FACILITIES, THE CONTRACTOR SHALL EMAIL SPECTRUM ENGINEERING & CONSTRUCTION AT HAW.ENGINEERING.RESEARCH@CHARTER.COM***

17. ***ANY WORK REQUIRED TO RELOCATE CATV FACILITIES SHALL BE DONE BY SPECTRUM OCEANIC CABLE AND THE CONTRACTOR SHALL BE RESPONSIBLE FOR ALL COORDINATION REQUIREMENTS AND ASSOCIATED COSTS.***

18. ***ANY DAMAGE TO SPECTRUM OCEANIC'S FACILITIES SHALL BE REPORTED TO SPECTRUM OCEANIC'S TOC DEPARTMENT AT 625-8169.***

19. ***THE CONTRACTOR SHALL TUNNEL UNDER EXISTING CONCRETE CURB AND GUTTER AS NECESSARY TO EXTEND CONDUIT INTO EXISTING CATV PULLBOX AND INTO THE PROPOSED POWER SUPPLY PULLBOX.***

20. ***ALL EXISTING IMPROVEMENTS THAT ARE DISTURBED DURING THE CONSTRUCTION PHASE SHALL BE RESTORED TO ITS ORIGINAL OR BETTER CONDITION AT NO COST TO THE CITY IN ACCORDANCE WITH CITY'S STANDARDS.***

21. ***AT LOCATIONS WHERE EXISTING CATV PULLBOX REPLACEMENT IS PROPOSED, THE CONTRACTOR SHALL TAKE ALL NECESSARY PRECAUTION NOT TO DAMAGE THE EXISTING CABLES IN THE PULLBOX. ALL DAMAGES TO EXISTING CABLES SHALL BE REPAIRED BY SPECTRUM OCEANIC CABLE AND PAID FOR BY THE CONTRACTOR.***

22. ***COORDINATE ALL PENETRATION OF TELEPHONE PULLBOXES WITH HAWAIIAN TEL INSPECTOR.***

23. ***SMOOTH FINISH INSIDE WALL OF EXISTING PULLBOXES AND HAND-HOLES TO ITS ORIGINAL CONDITION OR BETTER.***

24. ***ALL NEW CONCRETE ENCASED CONDUIT SHALL BE PVC PIPE-SCHEDULE 40. ALL NEW DIRECT-BUIRED CONDUIT SHALL BE PVC PIPE-SCHEDULE 80. USE OF ANY OTHER MATERIAL TYPE (GTS, ETC.) SHALL BE LIMITED TO MATCHING EXISTING FACILITES. CONNECTION OF DISSIMILAR MATERIALS TO REQUIRE APPROVAL FROM SPECTRUM OCEANIC COORDINATOR AND ENGINEERING DEPT.***

25. ***THE CONTRACTOR SHALL PLACE POLY CORD THROUGH OUT PROJECT, AND SECURE IN MANHOLES, HANDHOLES, AND PULLBOXES.***

26. ***FOR 3" CONDUITS OR LARGER, THE CONTRACTOR SHALL INSTALL NEPTCO WP1800 MULETAPE OR APPROVED EQUAL IN ALL DUCTLINES, LEAVE MULETAPE IN PLACE FOR FUTURE USE AS A PULL OR FISH LINE, UNLESS OTHERWISE NOTED. REFERENCE GTE MATERIAL CODE NO. 571154. ALL DUCTS SHALL BE CAPPED TO PREVENT ENTRY OF FOREIGN MATERIAL DURING CONSTRUCTION AND AT COMPLETION OF INSTALLATION. ENDBELLS ARE REQUIRED FOR CONDUITS 2" AND LARGER.***

27. ***PENETRATION INTO PULLBOXES IF NECESSARY TO BE FROM FACTORY INSTALLED OPENING OR FROM BRICKS POSITION. PENETRATION FROM PULLBOX WALLS IS NOT ACCEPTABLE.***

28. ***BENDS IN THE DUCT ALIGNMENT, DUE TO CHANGES IN GRADE SHALL HAVE A MINIMUM RADIUS OF 20-FEET. ALL 90-DEGREE C-BENDS AT A POLE OR AT THE BUILDING FLOOR SLAB PENETRATION, SHALL HAVE A BEND RADIUS OF 10 TIMES THE DIAMETER OF THE DUCT OR GREATER.***

29. ***MINIMUM LENGTH OF CONDUIT USED SHALL NOT BE LESS THAN 5-FEET IN LENGTH. USE OF PARTIAL CONDUIT SECTIONS ALLOWABLE IS AT SPECTRUM OCEANIC COORDINATOR(S) DISCRETION.***

30. ***ALL CONDUITS SHALL ENTER THROUGHT THE END "SHORT WALL" OF THE PULL-BOX. ENTRY SHALL BE AT 90 DEGRESS (PERPENDICULAR) TO WALL FACE WITH BENDS NO LESS THAN 12" FROM EXTERIOR WALL.***

31. ***A MINIMUM OF (2) PRECAST SECTIONS MUST BE USED ON ALL 2X4 OR 2X6 PULLBOXES.***

32. *ALL NEW CONSTRUCTION SHALL UTILIZE CONCRETE PRECAST BASE UNLESS OTHERWISE APPROVED OR SPECIFIED BY SPECTRUM OCEANIC COORDINATOR(S).*

33. *FOR PULL-BOX LOCATIONS WHERE VEHICULAR INTRUSION POSSIBLE, CONCRETE COLLAR REQUIRED PER SPECTRUM OCEANIC STANDARDS AND SPECIFICATIONS MANUAL. EXAMPLES INCLUDE, BUT NOT LIMITED TO, ROLLED/RIBBON CURBS, CURB / HEADERS LESS THAN 5" IN HEIGHT, VEHICLE TRAVELWAYS WITH NO DEFINED CURB / HEADER, ETC.*

    A. *NON-SIDEWALK AREAS, SEE CHAPTER 2, FIGURE 18.1c, AND 19.1c IN THE SPECTRUM SPECIFICATIONS MANUAL.*
    B. *COLLAR REQUIRED FOR ALL 3'X5' HANDHOLES, SEE CHAPTER 2, FIGURE 20.1b. IN THE SPECTRUM SPECIFICATIONS MANUAL.*

34. *WHEN THREE (3) OR MORE 4" CONDUITS ENTER ONE END WALL OF ANY PULLBOX, ONLY BRICK BASES WILL BE ALLOWED UNLESS OTHERWISE INSTRUCTED/APPROVED BY SPECTRUM OCEANIC COORDINATOR(S).*

35. *TWO MINIMUM LAYERS OF BRICKS TO BE USED LOWER THAN THE LOWEST DUCT ENTERING THE PULLBOX. TOP LAYER OF BRICK TO BE FLUSH WITH TOP OF CONDUIT OR HIGHER.*

36. *FOR UPGRADE/REPAIRS TO EXISTING PULL-BOXES, BRICKS MAY BE USED AND SHALL ALWAYS BE AT LEAST TWO LAYERS LOWER THAN THE LOWEST DUCT ENTERING THE PULLBOX.*

37. *AT NO TIME SHALL CEMENT MORTAR, WOOD, OR ANY OTHER MATERIAL BE USED BETWEEN PRECAST SECTIONS.*

38. *LEVELING OR RAISING OF BOXES TO GRADE MUST BE DONE:*

    A. *PRE-CAST BASE(S) – USING GRAVEL LAYER UNDER BASE (TYPE 3B OR EQUIVALENT APPROVED BY SPECTRUM OCEANIC COORDINATOR)*
    B. *BRICK BASE(S) – ADJUSTMENTS TO BRICKWORK SECTION. THE PERMANENT INSTALLATION OF WOODEN WEDGES TO ACCOMPLISH THIS PURPOSE WILL NOT BE ACCEPTED.*

39. *5/8" x 8' COPPER GROUND RODS SHALL BE PLACED IN ALL PULLBOXES UNLESS OTHERWISE DIRECTED BY SPECTRUM OCEANIC CABLE. GROUND RODS WILL BE PLACED IN THE CORNER 3" TO 4" FROM THE WALL AND AWAY FROM ANY CONDUIT WITH NO MORE THAN 8" STICKING UP ABOVE GROUND.*

40. *TRENCHING TO BE CONDUCTED BY HAND DIGGING NEAR AND ACROSS EXISTING UTILITY LINES.*

41. *MINIMUM CLEARANCE BETWEEN STREET LIGHT STAND AND FIRE HYDRANTS SHALL BE THREE FEET.*

42. *UNDERGROUND UTILITIES SHOWN HEREON IS FOR INFORMATION ONLY. NO GUARANTEE IS MADE ON THE ACCURACY OR COMPLETENESS OF SAID INSTALLATION.*

43. ***FOR UNDERGROUND CABLE LOCATING AND MARKING, FIVE WORKING DAYS ADVANCE NOTICE IS REQUIRED. THREE WORKING DAYS ADVANCE NOTICE IS REQUIRED FOR ANY INSPECTION BY A DESIGNATED REPRESENTATIVE. CONTRACTOR SHALL TAKE NECESSARY PRECAUTION NOT TO DAMAGE ANY EXISTING CABLES OR DUCTS. SPECTRUM OCEANIC'S INSPECTOR OR DESIGNATED REPRESENTATIVE IS REQUIRED TO BE AT ANY JOB SITE WHENEVER THERE WILL BE A BREAKAGE INTO OR ENTRY INTO ANY STRUCTURE THAT CONTAIN SPECTRUM OCEANIC'S FACILITIES.***

44. ***CONCRETE STRENGTH SHALL BE 3000 PSI IN 28 DAYS.***

45. ***CURING AND BACKFILLING. MAINTAIN CONCRETE IN A MOIST CONDITION FOR 24 HOURS MINIMUM FOR 3,000 PSI AND 48 HOURS MINIMUM FOR 2,500 PSI BEFORE COMPACTED.***
    BACKFILLING: 72 HOURS MINIMUM BEFORE PERMITTING MOTOR TRAFFIC LOAD ON DUCTLINE. CURING METHOD SHALL MEET SPECTRUM OCEANIC COORDINATOR'S APPROVAL.

46. ***INSTALL 4-MIL. THICK ORANGE COLOR WARNING TAPE 4-INCH WIDE ENTIRE LENGTH OF TRENCH WHEN PLACING CATV CONDUITS. TAPE SHOULD READ "CAUTION BURIED CABLE LINE BELOW". MANUFACTURED BY HARRIS INDUSTRIES, INC. CATALOG NUMBER UT-43 OR EQUIVALENT TAPE. TAPE TO BE INSTALLED 12-INCHES ABOVE CONDUIT OR IF CONCRETE JACKET INVOLVED THEN 12-INCHES ABOVE JACKET.***

47. ***AFTER DUCTLINE HAS BEEN COMPLETED, A MANDREL WITH A SQUARE FRONT NOT LESS THAN 12-INCH LONG AND HAVING A DIAMETER OF ¼-INCH LESS THAN THE INSIDE DIAMETER OF DUCT, SHALL BE PULLED THROUGH EACH DUCT AFTER WHICH A BRUSH WITH STIFF BRISTLES SHALL BE PULLED THROUGH TO MAKE CERTAIN THAT NO PARTICLES OF EARTH, SAND, OR GRAVEL HAVE BEEN LEFT INSIDE. DUCTS SHALL BE COMPLETELY DRY AND CLEAN.***

48. ***METALLIC ENTRANCE CONDUITS SHALL BE GROUNDED.***

49. ***ALL CONDUITS WITHIN A BUILDING SHALL:***

A) ***BE INSTALLED IN THE SHORTEST AND STRAIGHTEST POSSIBLE RUN.***
B) ***HAVE NO SECTION LONGER THAN 100-FEET NOR CONTAIN MORE THAN TWO 90-DEGREE BENDS. AN APPROVED SIZED JUNCTION BOX OR GUTTER BOX SHALL BE PLACED IF THIS IS EXCEEDED.***
C) ***ALL BENDS SHALL BE LONG SWEEP-RADIUS BENDS BUT THE INSIDE RADIUS OF THE BEND MUST NEVER BE LESS THAN TEN TIMES THE DIAMETER OF THE CONDUIT.***

50. ***ALL CONSTRUCTION MUST BE INSPECTED AND APPROVED BY SPECTRUM OCEANIC PRIOR TO THE INSTALLATION OF ANY OF ITS FACILITIES AND THE ENERGIZING OF ITS SYSTEM.***

51. ***CONTRACTOR AND/OR CUSTOMER SHALL PROVIDE SPECTRUM OCEANIC WITH SUFFICIENT INSTALLATION TIME IN THEIR OCCUPANCY TIME TABLE.***

FILE:ContraNotes.doc

MAP LEGEND:
VARIOUS TYPES OF UNDERGROUND BOXES/VAULTS
MANHOLES
CONDUIT PATH
POLES
Kamehameha Hwy
Kipapa Dr
Meheula Pkwy
Hookelewaa St
Ikaloa St
Ikaloa Pl
Pohina Pl
Alo Pl
Makulu Pl
Waia Loop
Hakupokano Loop
Kailiula Loop
Kaloapau St
Hoeu Pl
Anania Dr
Hikikaula St
Makaimoimo St
Mililani High School
Mililani Waena Park
Mililani Waena Elementary School
Mililani Community Library
Mililani Town Center Neighborhood Park
Puanane Pl

PBR HAWAII
& ASSOCIATES, INC.

KIMI MIKAMI YUEN, LEED® AP BD+C
President / Chairperson

VINCENT SHIGEKUNI
Executive Vice-President / Principal

GRANT T. MURAKAMI, AICP, LEED® AP BD+C
Executive Vice-President / Principal

CATIE CULLISON, AICP
Senior Vice-President / Principal

TOM SCHNELL, AICP
Vice-President / Principal

MARC SHIMATSU, PLA, ASLA
Vice-President / Principal

RAYMOND T. HIGA, PLA, ASLA
Associate Principal

DACHENG DONG, LEED® AP
Associate Principal

NATHALIE RAZO
Associate Principal

ANN MIKIKO BOUSLOG, PhD
Director of Land Economics & Real Estate

RAMSAY R. M. TAUM
Cultural Sustainability Planner

ETSUYO KILA
Senior Associate

GREG NAKAI
Senior Associate

BRADLEY FURUYA, AICP
Associate

C.R. 'IMIPONO WICHMAN
Associate

THERESA DEAN
Associate

R. STAN DUNCAN, PLA, ASLA
Chairman Emeritus

RUSSELL Y. J. CHUNG, PLA, FASLA
Principal Emeritus

THOMAS S. WITTEN, FASLA
Principal Emeritus

W. FRANK BRANDT, FASLA
Founding Partner

January 15, 2026

Mr. James Donaldson
Construction Coordinator
OSP Engineering
Spectrum/Charter
151 Pali'i Street
Mililani, HI 96789

SUBJECT: PRE-ASSESSMENT CONSULTATION FOR A HRS CHAPTER 343 ENVIRONMENTAL ASSESSMENT – MILILANI HIGH SCHOOL TEACHER WORKFORCE HOUSING PROJECT, MILILANI, O'AHU, PORTIONS OF TAX MAP KEYS (TMKs) 9-5-001: 017 AND 054

Dear Mr. Donaldson,

Thank you for your email (and attachments) dated September 9, 2025, regarding the subject Project. As the planning consultant to Pacific Housing Assistance Corporation (PHAC), which is the developer working with the School Facilities Authority (SFA) on the Mililani High School Teacher Workforce Housing Project, we appreciate the information that Spectrum should not be affected by the proposed Project. From your email, we also understand the following:

- Spectrum has underground equipment nearby.
- The locations of existing CATV pull-boxes, duct routes, aerial routes, and crossings are shown on the one-line diagram attached to your email.
- Spectrum provided this drawing with information on the facilities within the Project area, but these drawings are to be used for reference only.
- The exact locations, depth and routing of all underground CATV facilities must be verified in the field due to construction variances.
- In any case, toning through the One Call Center will identify Spectrum facilities in the immediate area.
- At this time, SPECTRUM occupies both CATV and Hawaiian Telcom's (HTCO) duct systems.
- This information has been provided to help minimize delays and prevent damage to existing CATV structures within the project area.

We value your participation in the environmental review process. Your email (with attachments) and our response will be reproduced in the forthcoming Draft Environmental Assessment (EA).

Sincerely,

PBR HAWAII

Greg Nakai
Senior Associate

cc: Lacey Shimabukuro, PHAC
Karen Arakawa, PHAC

1001 Bishop Street, Suite 650
Honolulu, Hawai'i 96813-3484
Tel: (808) 521-5631
Fax: (808) 523-1402
E-mail: sysadmin@pbrhawaii.com

printed on recycled paper

From: sysadmin
To: Greg Nakai
Subject: FW: Mililani High School Teacher Workforce Housing Project - Pre-Assessment Consultation for Chapter 343, HRS EA_HT-PR-25090802NT
Date: Tuesday, September 16, 2025 10:34:16 AM
Attachments: image001.png
image002.png
HawaiianTel Update.pdf
Hawaiian Telcom Standard Specifications July 2025.pdf

From: Naomi Pacheco <naomi.pacheco@hawaiiantel.com>
Sent: Tuesday, September 16, 2025 10:01 AM
To: sysadmin <sysadmin@pbrhawaii.com>
Cc: HT-Plan Reviews <HT-PlanReviews@hawaiiantel.com>; Jon Lui-Kwan <Jon.Lui-Kwan@hawaiiantel.com>
Subject: RE: Mililani High School Teacher Workforce Housing Project - Pre-Assessment Consultation for Chapter 343, HRS EA_HT-PR-25090802NT

Warning: Unusual sender <naomi.pacheco@hawaiiantel.com>
You don't usually receive emails from this address. Make sure you trust this sender before taking any actions.

Aloha PBR HAWAII Team,

Mahalo for letting Hawaiian Telcom to look over project: Mililani High School Teacher Workforce Housing Project.

Attach you will find an update of approx. location of HT UG Infrastructure location of this project and Hawaiian Telcom Standards.
As projects within the **Mililani High School Teacher Workforce Housing Project Area proceed, please provide more detailed plans to Hawaiian Telcom to review**.

Location Map**: Design is Not To Scale of the map, HT Infrastructure are drawn in RED (- -).**

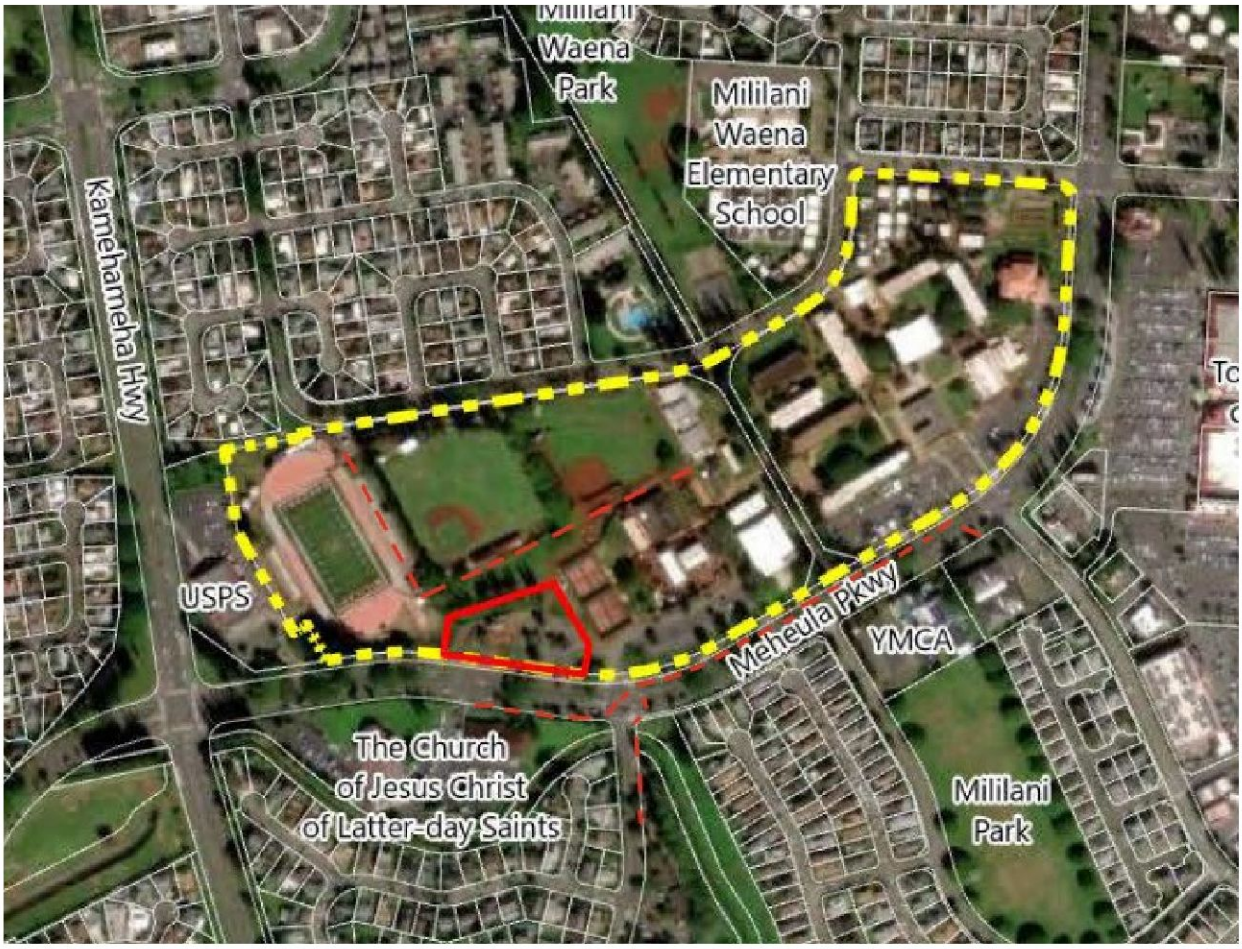

Mahalo,
Naomi Pacheco
C: 808.501.3838
OSP Engineer | Hawaiian Telcom
Naomi.Pacheco@hawaiiantel.com

NOTICE: This message is intended only for the person or entity to which it is addressed and may contain confidential and/or privileged information. If you are not the intended recipient, any review, retransmission, dissemination, copying or other use of this message is strictly prohibited. If you received this message in error, please contact the sender immediately by reply email, delete this message from all computers, and destroy any printed copies.

From: Naomi Pacheco
Sent: Friday, September 12, 2025 10:37 AM
To: 'sysadmin' <sysadmin@pbrhawaii.com>
Cc: HT-Plan Reviews <HT-PlanReviews@hawaiiantel.com>; Jon Lui-Kwan <Jon.Lui-Kwan@hawaiiantel.com>
Subject: RE: Mililani High School Teacher Workforce Housing Project - Pre-Assessment Consultation for Chapter 343, HRS EA_HT-PR-25090802NT

Aloha to whom this may concern,

I will be looking over this request and get back to you.

Mahalo,
Naomi Pacheco
C: 808.501.3838
OSP Engineer | Hawaiian Telcom

Naomi.Pacheco@hawaiiantel.com

NOTICE: This message is intended only for the person or entity to which it is addressed and may contain confidential and/or privileged information. If you are not the intended recipient, any review, retransmission, dissemination, copying or other use of this message is strictly prohibited. If you received this message in error, please contact the sender immediately by reply email, delete this message from all computers, and destroy any printed copies.

From: HT-Plan Reviews <HT-PlanReviews@hawaiiantel.com>
Sent: Monday, September 8, 2025 8:02 PM
To: 'sysadmin' <sysadmin@pbrhawaii.com>
Cc: HT-Plan Reviews <HT-PlanReviews@hawaiiantel.com>; Naomi Pacheco <naomi.pacheco@hawaiiantel.com>
Subject: RE: Mililani High School Teacher Workforce Housing Project - Pre-Assessment Consultation for Chapter 343, HRS EA_HT-PR-25090802NT

Hi ,

Thank you for your email. This has been assigned for review. Please let us know if you have any further questions.

Please refer the HT APP ID# HT-PR-25090802NT any future correspondence or inquiries regarding this plan review.

Thanks and Regards
Nasarudeen T – Drafter
Mob : +91 8086121108,
e-mail – nasarudeen.thennadan@hawaiiantel.com

From: sysadmin <sysadmin@pbrhawaii.com>
Sent: Monday, September 8, 2025 1:58 PM
To: HT-Plan Reviews <HT-PlanReviews@hawaiiantel.com>
Subject: Mililani High School Teacher Workforce Housing Project - Pre-Assessment Consultation for Chapter 343, HRS EA

Aloha,

PBR HAWAII & Associates, Inc., is assisting the applicant, Pacific Housing Assistance Corporation (PHAC), by preparing and processing a Hawai‘i Revised Statutes (HRS) Chapter 343 Environmental Assessment (EA) for the proposed Mililani High School Teacher Workforce Housing Project, located in Mililani Town, O‘ahu.

Please send us any comments you may have by **October 5, 2025**.

Mahalo,
PBR HAWAII Team

PBR HAWAII
& ASSOCIATES, INC.

KIMI MIKAMI YUEN, LEED® AP BD+C
President / Chairperson

VINCENT SHIGEKUNI
Executive Vice-President / Principal

GRANT T. MURAKAMI, AICP, LEED® AP BD+C
Executive Vice-President / Principal

CATIE CULLISON, AICP
Senior Vice-President / Principal

TOM SCHNELL, AICP
Vice-President / Principal

MARC SHIMATSU, PLA, ASLA
Vice-President / Principal

RAYMOND T. HIGA, PLA, ASLA
Associate Principal

DACHENG DONG, LEED® AP
Associate Principal

NATHALIE RAZO
Associate Principal

ANN MIKIKO BOUSLOG, PhD
Director of Land Economics & Real Estate

RAMSAY R. M. TAUM
Cultural Sustainability Planner

ETSUYO KILA
Senior Associate

GREG NAKAI
Senior Associate

BRADLEY FURUYA, AICP
Associate

C.R. 'IMIPONO WICHMAN
Associate

THERESA DEAN
Associate

R. STAN DUNCAN, PLA, ASLA
Chairman Emeritus

RUSSELL Y. J. CHUNG, PLA, FASLA
Principal Emeritus

THOMAS S. WITTEN, FASLA
Principal Emeritus

W. FRANK BRANDT, FASLA
Founding Partner

September 5, 2025

Hawaiian Telcom
HT-PlanReviews@Hawaiiantel.com

SUBJECT: PRE-ASSESSMENT CONSULTATION FOR A HRS CHAPTER 343 ENVIRONMENTAL ASSESSMENT – MILILANI HIGH SCHOOL TEACHER WORKFORCE HOUSING PROJECT, MILILANI, O'AHU TAX MAP KEY (TMK) 9-5-001: 054 PORTION OF

Dear ,

PBR HAWAII & Associates, Inc., is assisting the applicant, Pacific Housing Assistance Corporation (PHAC), by preparing and processing a Hawai'i Revised Statutes (HRS) Chapter 343 Environmental Assessment (EA) for the proposed Mililani High School Teacher Workforce Housing Project, located in Mililani Town, O'ahu.

The proposed Project is located at the southwestern portion of Mililani High School. While the overall area of the campus is approximately 43.964 acres, the footprint of the proposed Project will be limited to approximately 1.7 acres (please see enclosed Project Location Map).

The goal of this Project is to offer new multifamily rental unit options in a variety of configurations (with a preference for studio, 1-, and 2-bedroom units) at affordable rents to Hawai'i's teachers and education personnel. Housing developed for this project shall be prioritized for licensed teachers, educators, and education staff, including State of Hawai'i Department of Education (HIDOE) staff.

With this letter, we seek your input on the Project and comments as to whether the proposed Project may have an impact on any of your existing or proposed projects, plans, policies, or programs that we should consider when preparing the HRS Chapter 343 Draft EA. Please send us any comments you may have by **October 5, 2025**. You may mail your comments to:

PBR HAWAII & Associates, Inc.
Attn: Greg Nakai
1001 Bishop Street, Suite 650
Honolulu, HI 96813-3484
gnakai@pbrhawaii.com

Sincerely,

PBR HAWAII

Greg Nakai
Senior Associate

Enclosure: Project Location Map

1001 Bishop Street, Suite 650
Honolulu, Hawai'i 96813-3484
Tel: (808) 521-5631
Fax: (808) 523-1402
E-mail: sysadmin@pbrhawaii.com

printed on recycled paper

Path: Q:\Oahu\Mililani High School Teacher Workforce Housing\GIS\Project\Project Location Map.aprx

DATE: 9/4/2025

Legend

- Project Site
- Mililani High School
- TMK Boundaries
- HT UG INFRASTRUCTURE

Source: City & County Honolulu, 2025. ESRI Basemap

Disclaimer: This graphic has been prepared for general planning purposes only.

Project Location Map

Mililani High School Teacher Workforce Housing

Island of O'ahu

North

Linear Scale (feet)

0 200 400 800

PBR HAWAII & ASSOCIATES, INC.

NOTE: DESIGN IS NOT TO SCALE OF THE MAP, HT INFRASTRUCTURE ARE DRAWN IN RED (- -).

Hawaiian Telcom

STANDARD SPECIFICATIONS FOR PLACING COMMUNICATIONS SYSTEMS

JULY 2025

To: All holders of the Standard Specifications of Hawaiian Telcom.

These standard specifications are intended to govern the work or provide guidance on all placement of communication systems by or for Hawaiian Telcom acceptance throughout the State of Hawaii.

Jonathan Delahoyde – Manager
Cody Jaramillo – Manager
Paul Hanohano – Network Planner
Nicole Lajousky – OSP Engineer

TABLE OF CONTENTS

Section 1. General Specifications
- a. General Conditions
- b. Technical Provisions

Section 2. Standard Specifications for Pre-Cast Maintenance Holes

Section 3. Standard Pre-Cast Box Configurations
- a. Meter Box
  - 436T — Drawing #34024 and #34024A — service drops only
- b. Pull Boxes
  - 2' X 4' 435-TB — Drawing #34056
  - 2' X 6' 435T-B6 — Drawing #34078
- c. Hand Hole
  - 4' X 6' X 4' — HTCO HH Type 1 (Modified)
- d. Maintenance Holes
  - 4' X 6'-6" X 6'-6" — HTC Code: 180014 & 180015 & Drawing #34029
  - 5' X 10'-6" X 6'-6" — HTC Code: 180016 & 180017

Section 4. Standard Maintenance Hole Cover Details
Drawing # 34086
- a. Standard 10" Traffic Frame and Cover
- b. Standard 5 5/8" Traffic Frame and Cover
- c. Bolting System
- d. Light Duty / Sidewalk Frame & Cover
- e. Special Tamper Proof Bolting
- f. Miscellaneous Details

Section 5. Standard Miscellaneous Hardware Details
- a. Puling-in Iron
- b. Cable Rack Stud Bolts
- c. Center Cable Rack Frame

Section 6. Standard Miscellaneous Construction Details
- a. Sump-Hole
- b. Construction Joint
- c. Expansion Joint Assemblies
- d. Cored Duct Connections
- e. Cable Marker Detail

Section 7. Concrete Collars for Landscape Areas

Section 8. General Clearance and Separation

Section 9. Guidelines for Installation and Repair of Poles and Underground Service Connection
National Pollutant Discharge Elimination System (NPDES) Requirements for Hawaiian Telcom Projects

Section 10. Quality Assurance
Site Inspection Checklists

Section 11. Specifications for Conduit and Fittings

Section 12. Standard Duct Formations and Window Detail with End Bells
Drawing #34028

TABLE OF CONTENTS

Section 13. Standard Pole Anchoring Requirements
Drawing #34021
a. Standard Concrete Slug Anchoring Detail
b. Guy Anchor 18" Deadman
c. Guy Anchor 24" Deadman
Termi-Mesh Detail
Pole Setting Requirements

Section 14. Standard Electrical Grounding Details

Section 15. General Construction / Design Notes
General Construction Notes Within a Building
Underground Construction Standards for Residential Property

Section 16. Fiber Timeline

Supplemental Documents available upon request:

Additional maintenance hole / telecom box sizes

Inside wiring (horizontal cabling) examples

SECTION 1:

GENERAL SPECIFICATIONS

a. General Conditions
b. Technical Provisions

GENERAL CONDITIONS

A.I.A. DOCUMENT NO. A-201: The Standard Form of General Conditions, A.I.A. Document No. A-201 dated August 1987 is hereby made a part of the General Conditions and shall govern each section of the work therein. These General Conditions, Paragraphs 1.1 through 1.41, shall supersede the above Document A-201 where it is in conflict.

1.1 DEFINITIONS

In these specifications, the following definitions shall pertain to:

OWNER, Hawaiian Telcom, 1177 Bishop St, Honolulu, Hawaii 96813; and

ENGINEER, the Manager-Network Engineering & Planning, of Hawaiian Telcom acting either directly or through their authorized representative; and

INSPECTOR, an authorized representative of Hawaiian Telcom. The Inspector shall be identified in writing by the Engineer; and

SUBCONTRACTOR, includes only those having direct contact with the Contractor and it includes one who furnishes material worked to a special design according to the plans and specifications of this work.

1.2 CONTRACTOR'S UNDERSTANDING

It is understood and agreed that the Contractor has by careful examination, satisfied themselves as to the nature and location of the work, the conformation of the ground, the character of equipment and facilities needed, the general and local conditions, and all other matters which can in any way affect the work under this contract. No additional allowance will be granted because of the lack of knowledge of such conditions.

1.3 RESPONSIBILITY

The Owner will hold liable for all the acts of subcontracts and shall deal only with the Contractor in matters pertaining to the different trades employed on the work.

1.4 MATERIALS AND WORKMANSHIP

Unless otherwise specified, all materials shall be new and of good quality. All work shall be done in a neat and workmanlike manner.

1.5 CORRECTION OF WORK

The Contractor shall re-execute any work that fails inspection. The provisions of this paragraph shall apply to the work done by Subcontractors as well as to work done by direct employees of the Contractor.

1.6 PERMITS AND LICENSES

The Contractor shall procure and pay for all permits and licenses and shall give all notices necessary and incident to the due and lawful prosecution of the work.

1.7 INSPECTION OF WORK

The Engineer and their representatives shall at all times have access to the work whenever it is, in preparation or in progress, and the Contractor shall provide proper facilities for such access and for inspection.

If the specifications, the Engineer's instructions, laws, ordinances or any public authority, require any work to be specially tested or approved, the Contractor shall give to the Engineer a notice of its readiness for inspection. If any work should be covered up without approval or consent of the Engineer, it must, if required by the Engineer, be uncovered for examination at the Contractor's expense.

1.8 TEST AND DEFECTIVE MATERIALS

All materials proposed for use may be inspected or tested by the Engineer at any time during their preparation and use. When requested by the Engineer, the Contractor shall furnish, without charge, samples of all material entering into the work. All materials not conforming to the requirements of these specifications shall be considered as defective and all such materials, whether in place or not, shall be rejected. The defective material shall be removed immediately from the site of the work unless otherwise permitted by the Engineer. No rejected materials, the defects of which have been subsequently corrected, shall be used until approval in writing has been given by the Engineer. Upon failure on the part of the Contractor to comply promptly with any order of the Engineer made under the provisions of this article, the Engineer shall have authority to remove and replace defective material and to deduct the cost of removal and replacement from any monies due or to become due to the Contractor.

1.9 PROTECTION OF WORK AND PROPERTY

The Contractor shall continuously maintain adequate protection of all their work from damage and shall protect the Owner's property from injury or loss arising in connection with this contract. He shall make good any such damage, injury, or loss, except such as may be directly due to errors in the Contract Documents or caused by agents or employees of the Owner. He shall adequately protect adjacent property as provided by law and these Contract Documents. He shall provide and maintain all passageways, guard fences, lights and other safety facilities for protection of the public as required by the local authorities and the conditions at the project site.

1.10 AUTHORITY OF THE ENGINEER

The Engineer shall decide all questions which may arise as to the interpretation of the plans and specifications and as to the acceptability of materials furnished and work performed.

1.11 LINES AND GRADES

The Contractor will layout the centerline of the maintenance holes, handholes, pullboxes and ductline trench. The Contractor will verify the existing underground Hawaiian Telcom facilities and the new ductline shall be adjusted by the Contractor to suit the existing conditions and the details as described in the plans.

1.12 EXISTING UTILITIES

Underground utilities indicated on the plans are approximate in location. Existence of other utilities are not guaranteed. It is not the intent of these drawings to imply that all existing and future utilities are shown. The Contractor shall be held responsible for the location, support, protection or reconstruction, when

damaged, of all utilities. The Contractor shall immediately notify any utility of any damage to its system caused by construction under this contract.

Where an existing utility requires rerouting to provide space for the underground facilities, the Company will provide direct payment to the utility company involved for the necessary relocation.

1.13 DEVIATIONS FROM THE DRAWINGS AND SPECIFICATIONS

No deviation from drawings and specifications will be permitted without the approval of the Engineer.

1.14 DEMOLITION

Demolish existing sidewalks and pavements for new underground maintenance holes, handholes, pullboxes and ductline are required. Saw cut all edges prior to trenching. All work required to demolish existing maintenance holes or ductlines shall be done in the presence of the Inspector. All rubbish and debris from construction shall be removed from the job site by the Contractor. Notify the Inspector 24 hours before any demolition work is started.

1.15 REPLACEMENT OF PAVEMENT, GUTTERS, SIDEWALKS, ETC., DISTURBED OR DAMAGED DURING CONSTRUCTION

The Contractor shall restore all removed or damaged pavement, gutters, embankment, drainage facilities, curb, sidewalks, guard rails, signs, mailboxes, utility poles, anchors, landscaping, etc., to their original condition or better. The Contractor shall provide materials and workmanship in accordance with all applicable sections of the latest Standard Specifications for Road and Bridge Construction, and latest Specifications for Installation of Pipelines and Other Underground Installations on Federal Aid Highways, and all applicable sections of their latest amendment, of the Department of Transportation, State of Hawaii when construction is within the State Highway Right-of-Way.

The Standard Specifications for Public Works Construction, dated September 1986 of the Department of Public Works, City and County of Honolulu, County of Kauai, County of Maui, County of Hawaii shall be applicable when the construction is within the City and County Right-of-Way.

1.16 DRAINAGE

All ducts shall be installed with adequate drainage toward maintenance holes (Minimum slope 0.25%, unless otherwise noted.). All work must be done in the dry.

1.17 MAINTENANCE HOLE, HANDHOLE, PULLBOX AND DUCTLINE INSPECTION

Maintenance holes, handhole and pullbox installation work shall be subject to the supervision and approval of the Inspector.

Duct installation shall commence only after trench is inspected and approved by the Inspector who shall be notified 24 hours prior to commencement of work.

1.18 MAINTENANCE HOLES AND DUCTLINE FINAL INSPECTION

The completed ductline, maintenance holes, handholes and pullboxes shall be subject to a field test before final acceptance.

1.19 SANITARY FACILITIES

Contractor shall provide and maintain temporary toilets as necessary for use by workmen; locate toilets where directed and keep in a sanitary condition.

1.20 REMOVAL OF RUBBISH

During the progress of work, all rubbish, empty crates, waste lumber, displaced materials, etc., shall be removed as soon as possible and upon completion of work, the Contractor shall remove from the Owner's property and from all public and private property, at their own expense, all temporary structures, rubbish and waste materials resulting from their operations.

1.21 "RECORD" DRAWINGS

Prints of necessary drawings will be supplied to the Contractor for preparation of "record" prints. Mark up all changes in red. Prior to, bring in "record" prints up to date for Engineer's approval. On completion of work, deliver to Engineer the completed set of "record" prints.

1.22 LAWS TO BE OBSERVED

Contractor shall comply with all the laws, ordinances, rules and regulations, whether federal, state, municipal, or enacted by any other legislative or regulatory body, including, but not limited to, federal and state Occupational Safety and Health Act Laws and Regulations, the National Electrical Safety Code, Telephone Company practices, Worker's Compensation Laws, Unemployment Compensation Laws, the Federal Equal Employment Opportunity Law, Social Security Law, the Fair Labor Standards Act, and any orders issued by the Public Utilities Commission of the State in which the work is to be performed. Contractor agrees to provide themselves with copies of those documents or orders that are applicable to the work he is to perform and shall keep a copy of each of these at the site of their operations.

1.23 OCCUPANCY BEFORE COMPLETION

Hawaiian Telcom reserves the right to perform work and leave equipment in the completed maintenance holes and ductlines prior to the time of the completion of the entire project, providing such use of the maintenance holes and ductlines does not interfere with the Contractor's work. Such use of the maintenance holes and ductlines is not to be construed as final acceptance of the maintenance holes and ductlines.

1.24 STOPPAGE OF WORK AND STATE / COUNTY INSPECTION

The Department of Transportation has reserved the right to inspect and to stop work at any time if the Contractor fails to comply with regulations pertaining to construction within State / County Right-of-Way.

1.25 DESCRIPTION OF THE WORK

The Contractor shall furnish all labor, tools, equipment and materials, other than labor and materials hereinafter listed as being furnished by the Owner; to properly perform and fully complete all work as shown on the applicable construction drawings.

1.26 MATERIALS TO BE FURNISHED BY THE OWNER

The Owner may elect to furnish specific types of material to facilitate construction of the project. If the Owner exercises this option, the Contractor shall pick up the material at a designated Hawaiian Telcom facility.
Requests for materials shall be made in writing and shall be forwarded to the Engineer or their representative.

The materials listed above will be installed by the Contractor in place complete in accordance with the drawings and these specifications.

The Contractor shall furnish all labor and equipment required to deliver the above materials to the job site. Materials lost or damaged by careless handling by the Contractor shall be paid for by the Contractor or replaced in kind by him at their own expense. Upon completion of work, the Contractor shall return all unused materials to the baseyard from which they were originally drawn.

Where split ducts and split junior end bells are required, the Contractor shall split the ducts and junior end bells.

1.27 DRAWINGS AND STANDARD SPECIFICATIONS

Dimensions on drawings take precedence to what the drawings measure to scale, and details, take precedence to general drawings. The Contractor shall verify all measurements at the site and shall be responsible for the accuracy of the same. Should the drawings and specifications disagree in themselves, the better quality or greater quality of work or materials shall be estimated upon, unless otherwise ordered in writing, shall be furnished.

TECHNICAL PROVISIONS

2.1.1 SCOPE OF WORK

The Contractor shall furnish all labor, tools, equipment and materials necessary for all excavating, backfilling and finish grading to construct the maintenance holes, handholes, pullboxes and ductlines to the alignments, grades and dimensions as indicated on the drawings and specified herein.

2.1.2 EXCAVATION

Excavation for maintenance holes, handholes, pullboxes and ductline trenches shall be to the alignment, grade and dimensions as indicated on the drawings and as specified herein. The lateral limit for maintenance hole and handhole excavation shall be the vertical surfaces two feet outside the neat lines of the structures. In excavation operations, the Contractor shall in no way disturb the ground below the elevations shown on the plans or established by the Engineer for the foundations of the maintenance holes, handholes, pullboxes or ductlines. All cuts in excess of depths required shall be filled with concrete or crushed lava rocks as authorized by the Engineer, at no cost to the Owner. Sides and bottom shall be kept firm and reasonably smooth. Trench may, upon request of the inspector, be excavated at least 2 feet beyond the location where ductline is to be installed in order to expose any obstructions which will cause routing of ductline to change. Inspection of ductline shall be scheduled (1) when trench excavation is completed but before ducts are installed; and (2) when ducts are installed but before concrete is poured or backfill is installed.

2.1.3 SHORING AND PUMPING

Excavations shall be shored and braced where necessary and as directed by the Engineer to prevent danger to persons or structures from cave-in or erosions. Where the new ductline runs parallel, adjacent and at a depth lower than the existing duct bank, the Contractor shall shore and brace their excavation to prevent undermining and damage to the existing duct bank. Shoring and sheathing shall be maintained during construction operations as required, and removed as the excavations are backfilled in a manner to prevent injurious caving in. Adequate drainage and pumps for dewatering of excavations shall be provided so that all work can be done in the dry.

2.1.4 BACKFILL

Backfill for ductline trenches, maintenance holes, handholes and pullboxes shall be in accordance with :

a. State Highway Department's Standard Specifications for Road and Bridge Construction with latest amendments, if construction is located under a State street or road, or located in private property.

b. The Standard Specifications for Public Works Construction, dated September 1986, of the Department of Public Works, City and County of Honolulu, with latest amendments, if construction is located under City and County street and road.

Backfilling shall be subject to the approval of the Inspector, the authorized representative of the Department of Transportation, State of Hawaii or Department of Public Works, City and County of Honolulu, County of Kauai, County of Maui, County of Hawaii as the case may be. All wood and debris shall be removed from the trench before backfilling.

Backfill Material

a. Type "A" Backfill, beach sand, earth or earth and gravel. If earth and gravel, maximum rock size shall be 1" and mixture shall contain not more than 50 percent by volume of rock particles.

b. Type "B" Backfill, beach sand, earth or earth and gravel. If earth and gravel, mixture must pass 1/2" mesh screen and contain no more than 20 percent by volume of rock particles.

Backfill material shall be placed in maximum of 8" layers in loose thickness and mechanically compacted to 95% of ASTM D1557 maximum dry density. In no case shall tamping be accomplished by using the wheels or tracks of a vehicle. Backfill over concrete encased ducts shall be Backfill Type "A". Backfilling shall be to finished grade as shown on drawings and matching existing conditions.

Excavated material may be reused as backfill, providing that it conforms to requirements of Type "A" and "B" as described herein and is approved for use by the Engineer. Backfill material shall be free of wood, paper or other objectionable material.

2.2 REINFORCED CONCRETE/CONCRETE MASONRY

2.2.1 MATERIALS

Portland Cement: Cement for all classes of concrete and mortar shall conform to the requirements under ASTM Designation C150, Type I or Type II.

Water: Water shall be clean and free from oil, acid, salt, alkali, organic matter, or other deleterious substances.

Aggregates: Local aggregates of proven strength, durability, water tightness and wearing quality conforming to specifications of ASTM Designations C-33 for concrete and C144 for use in masonry mortar. The maximum size of aggregate for use in concrete shall be 1 inch. When concrete is to be used in structures less than 6 inches in thickness or in ductline encasement, the maximum aggregate size shall be 3/4 inch.

Admixture: All water reducing, set retarding admixture shall meet the requirements of ASTM C494, Type D; all air entraining admixtures shall meet requirements of ASTM C260; or as specified in special provisions. Calcium chloride is not to be used as an admixture.

2.2.2 CONCRETE MIXTURES

All concrete mixtures shall conform to the requirements in the following table:

Water (Gallons/Bag of Cement)	Minimum Compressive Strength (fc)
4.7	5,000 PSI
5.0	4,000 PSI
5.4	3,500 PSI
6.6	3,000 PSI
7.3	2,500 PSI

The minimum strength requirement shall be satisfied if results of tests equal or exceed the required (fc) when tested in accordance with ASTM C39.

2.2.3 REINFORCEMENT

1. All reinforcing bars shall be deformed high strength steel conforming to ASTM A-615-84A, Grade 60; or specified in special provisions.

2. Reinforcement shall be placed in accordance with Concrete Reinforcing Steel Institute Manual of Standard Practice.

3. Welded Wire Fabric shall conform to ASTM-185-85 Galvanized.

4. Concrete Protection for Reinforcement

    1. Slab on grade ..... 3”

    2. Formed concrete exposed to weather or ground ..... 2”

    3. Weather protected slab and walls ..... 3/4”

5. Minimum Concrete Wall Reinforcement (unless noted otherwise on plan or special provisions/schedule)

    1. 6” # 4 @ 16” EW

    2. 8” # 4 @ 18” EW EF

    3. 10” # 4 @ 16” EW EF

    4. 12” # 4 @ 12” EW EF

6. Concrete Masonry

    1. Units shall be in accordance with ASTM C-90.

    2. Mortar shall be minimum 28-day strength of 2500 PSI.

2.2.4 STRUCTURAL STEEL

A. Structural Steel shall be detailed, fabricated and erected in accordance with the latest ATSC codes and specifications.

B. Rolled shapes and plates; ASTM A-36-84a, f_y = 36,000 PSI.

C. Unless noted otherwise, all field connections shall be made with 1/2” diameter ASTM A307 80 bolts with a minimum of 2 bolts per connection.

D. Bolts set in concrete shall be galvanized and conform to ASTM 307-80.

E. All welds shall be in accordance with the latest recommendations of AWS and AISC using E70, low hydrogen electrodes. Unless noted otherwise, minimum size weld shall be 3/16” fillet.

2.2.5 CONVEYING

Convey concrete from mixer to forms as rapidly as practical by methods to prevent segregation. No vertical free drop greater than five feet unless authorized by the Inspector; prevent concrete from dropping directly on to ducts.

2.2.6 PLACING

Clean and remove all construction debris and extraneous matter from inside forms and trenches before placing concrete. Place concrete only upon clean damp surfaces, free from water. Place concrete in horizontal layers not exceeding 18 inches thickness. Place concrete so as to avoid segregation of materials and displacement of ducts, inserts and reinforcing. Compact all concrete thoroughly during and immediately after placing to secure dense, watertight concrete. Mechanical vibrators shall be used for stacked duct banks of three (3) conduits or higher. Use of flat hand spades may be used for compacting concrete in smaller duct configurations. NOTIFY THE INSPECTOR 48 HOURS BEFORE PLACING ANY CONCRETE. PLACE CONCRETE ONLY IN THE PRESENCE OF THE INSPECTOR.

2.2.7 FINISH

Maintenance hole floor; integral cement topping with wood floated finish. Exposed surfaces; smooth and free from defects. Top of maintenance hole roof slab; wood floated. Interior walls and ceilings shall be smooth free of irregularities, and cement-washed; and all surfaces shall be found free of rock pockets and honeycombed-areas. Sections having cracks that may impair the structural strength or water migration are not acceptable.

2.2.8 CURING

Provide for method to maintain concrete in a moist condition for 28 days after placing. Ductline concrete; 48 hours minimum before compacted backfilling permitted; 72 hours minimum before permitting motor traffic load on ductline. Curing method shall be satisfactory to the Engineer.

2.2.9 PATCHING

Patch all voids, poor joints, holes and minor defects before concrete is thoroughly dry, using mortar of same proportions as in concrete being patched. Do all patching carefully to secure watertight concrete.

2.2.10 FORMS

Construction: Forms shall conform to the shape, lines and dimensions of the members as called for on the plans, and shall be substantial and sufficiently tight to prevent leakage of mortar. They shall be properly supported, braced, or tied together so as to maintain position and shape and shall be constructed so that they may be removed without causing any overstressing of the concrete. The Contractor shall be responsible for the adequacy of the forms and form supports. Either steel or wood forms may be used. Surfaces of metal forms shall be free from irregularities, dents, or sags. Knot holes and broken places in wooden forms shall be covered with metal pieces. All lumber in contact with concrete shall be surfaced shiplap on T. & G. or plywood form lumber. All exposed surfaces shall be formed with new plywood forms or better.

All formwork shall be clean and free from dirt and construction debris and shall be oiled with a non-staining oil before each occasion of their use. For “poured-in place” maintenance holes, and handholes, walls shall be double formed unless otherwise specified on the construction drawings.

Removal: Forms shall not be disturbed until the concrete has adequately hardened and shall not be removed until the concrete had attained the necessary strength to support its own weight and any construction live loads.

Maintenance hole and handhole wall forms shall not be removed or released until 48 hours after final wall pour. Forms supporting the maintenance hole roof slab shall not be removed until 14 days after final slab pour.

All removal of forms shall be done in the presence of the Inspector.

2.2.11 LOADING

No part of the structure shall receive a live load or any other loading outside of its own weight until at least 28 days have elapsed since placing of the concrete.

2.3 DUCT WORK AND BRICK WORK

2.3.1 MAINTENANCE HOLES

Maintenance hole construction may be either "poured-in-place" or "precast" concrete. The maintenance hole pits shall be excavated to the alignment, grade and dimensions on the drawings and as specified herein. The lateral limit for maintenance hole excavation shall be constructed only after a minimum of 3 feet of adjacent duct trench on both sides of the maintenance hole have been excavated to determine that no obstruction to the line and grade of the ductline exists.

2.3.2 PRECAST MAINTENANCE HOLES

Maintenance hole pits are to be flat and smooth, free of rocks, rock chips, hardened lumps of dirt, debris and all deleterious material. A six-inch layer of compacted sand shall be placed as a base for "precast" maintenance holes.

2.3.3 DAMP-PROOFING OR WATER-PROOFING

Damp proofing is not required in locations where there is no known standing water or flooding potential. The Contractor is responsible for identifying and getting written approval before doing any work or responding to any bids where damp proofing may not be needed. Damp proofing may be provided on all exterior maintenance hole walls or mixed in as part of the poured-in-place or precast process using Xypex C-500. All dust, dirt, loose mortar and other deleterious substances shall be removed from the concrete surface. The concrete surface shall be thoroughly dry before the damp proofing is applied. The concrete surface shall be primed in accordance with the manufacturer's instructions and two coats of damp-proofing compound shall be applied. Allow the compound to dry thoroughly after priming and between coats. Do not backfill until the final coat has dried hard.

2.3.4 PLACEMENT OF PLASTIC DUCTS

a. Ductline trench:

Ducts shall be placed after elevations at all critical crossings have been verified to conform with the profiles as shown and up to 2 feet of adjacent ductline trench is excavated. Trench excavation work between maintenance holes shall start from the low

end commencing to the high point of the duct bank. Where there are no critical crossings and before the ducts are placed, up to 2 feet of adjacent ductline trench shall be excavated to determine that no obstruction to the line and grade of the ductline exists. All trenches shall be smooth, level and mechanically compacted.

b. Assembly of plastic ducts:

1. Precaution shall be taken to prevent damage to plastic ducts and coupling from thermal expansion and contraction. All ducts shall be kept in a cool condition at all times. Ducts stored at job site shall be protected from the direct heat of the sun. All ducts shall be cool when placed in trenches and when the concrete encasement is being poured. Warm ducts shall be water cooled before the concrete encasement is poured.

2. The ducts shall be spaced with plastic spreaders.

3. Apply PVC glue to the outside of the duct and inside of the coupling with a natural bristle brush. Immediately insert duct into coupling and give a half twist to insure good contact of duct coupling. Wipe off excess solution where duct enters fitting. Repeat for each coupling. Succeeding lengths of ducts are then placed in the open ends of the couplings and tightened in the same manner. Ends of conduits should be rasped or honed to insure smooth transition with couplers and terminators. All joints shall be watertight.

4. Contractors shall furnish and use plumber's soil pipe test plugs to seal ends of ducts at end of each day's work, and whenever work of duct installation has to be interrupted, and where ducts may be submerged in water to prevent entry of water, dirt or other debris into duct.

5. Conduit and duct changes of direction shall not exceed four degrees per length. There shall be no more than two (2) changes of direction in any 100' of conduit runs. Transitions and rolls prior to entering maintenance holes shall be made in a minimum distance of 50 feet or as shown on drawings. Arrangement of ducts in ductline shall be as shown on drawings.

6. Ducts ending in maintenance holes and handholes shall be terminated with junior end bells. End bells and terminators to ducts shall be flush to inside wall surfaces; duct extension into boxes is not acceptable.

7. Anchor ducts to bottom of trench to prevent floating and movement of ducts during concrete placing.

8. Thickness of concrete shown on the drawings is minimal and may be increased to fit actual shape of trench, however, excessive over-pouring of concrete shall be avoided.

9. After ductline has been completed, a solid block mandrel not less than 12" long and having a diameter of 1/4" less than inside diameter of duct, shall be pulled through each duct after which a brush with stiff bristles shall be pulled through to make certain that no particles of earth, sand or gravel have been left in the line. With the approval of the engineer, a disk-flex mandrel may be used for all ducts measuring 2" in diameter or less.

10. Install mule tape in all ducts and cap all ducts after testing with manufactured plugs.

11. Ductline measurements from maintenance hole wall to maintenance hole wall shall be provided by measuring the actual distances between each section. The distances shall be marked on the record prints and submitted to the Owner at the final inspection.

2.3.5 MORTAR FOR BRICK PORTION OF PULLBOX AND MAINTENANCE HOLE INSTALLATION

Cement mortar for the brick portion of pullbox and maintenance hole neck installation shall be composed of not less than one part (by volume) cement and three parts (by volume) fine aggregate. Mortar shall have a minimum 28 days strength of 2500 PSI. The ingredients must be proportioned by measurement and not by estimation, a bag of cement being taken to contain one cubic foot. They must be thoroughly dry mixed in a suitable tight box, after which the proper quantity of clean water shall be gradually added and then worked until a uniform mixture is secured. No greater quantity of mortar is to be prepared than is required for immediate use, and any mortar that has set shall not be retempered or used in any way.

2.4 CONCRETE JACKET ON EXISTING SEWER, WATER AND DRAIN LINES

The Contractor may be required to install concrete jackets around sewer mains and laterals, water and drain lines, where subsurface material is other than coral or rock. Plain concrete jacket shall be used when the clearance is less than one foot. Concrete jacket lengths shall be a minimum of 3" on each side of pipe for perpendicular or near perpendicular crossings.

Jacket lengths for diagonal crossings shall be determined by the Engineer.
.

SECTION 2:

STANDARD SPECIFICATIONS FOR PRE-CAST MAINTENANCE HOLES

TABLE OF CONTENTS

		PAGE
1.	SCOPE	3
2.	APPLICABLE DOCUMENTS	3
3.	DESCRIPTION	3
3.1	General	
3.2	Accessories	
4.	SPECIFIC DESIGN CRITERIA	4
5.	PHYSICAL REQUIREMENTS	5
5.1	Material Requirements	5
5.1.1	Rebar	
5.1.2	Concrete Mix	
5.1.3	Pulling Irons	
5.1.4	Bolt Inserts	
5.1.5	Bonding Ribbon	
5.1.6	Grade Rings and Neck Cones	
5.1.7	Frames and Covers	
5.1.8	Cable Racking	
5.2	Mechanical Requirements	6
5.2.1	Concrete Mix	
5.2.2	Forms	
5.2.3	Rebar Placement	
5.2.4	Surface Finish	
5.2.5	Dimensions	
5.2.5.1	General Statement	
5.2.5.2	Precast Maintenance hole Sizes	
5.2.5.3	Knockouts	
5.2.5.4	Concrete Inserts for Cable Racking	
5.2.5.5	Conduit Terminators	
5.2.6	Identification	
6.	ELECTRICAL REQUIREMENTS	7
6.1	Grounding System	
7.	ENVIRONMENTAL REQUIREMENTS	7
8.	ENDURANCE REQUIREMENTS	7
8.1	Dead and Live Loads	
8.2	Pulling Loads	
8.3	Concrete Curing/Strength	

TABLE OF CONTENTS

		PAGE
9.	REGULATORY AND SAFETY	8
10.	PRODUCT SUPPORT	8
10.1	Documentation	
10.2	Technical Support	
10.3	Quality Control/Quality Assurance Program	
10.3.1	Aggregate	
10.3.2	Concrete	
10.4	Product Enhancement	
11.	WARRANTY	8
12.	TECHNICAL COMPLIANCE	9
12.1	Product Performance Evaluation	
12.2	Manufacturer/Vendor Technical Qualification	
12.3	Quality Assurance Audit	
13.	COMMERCIAL REQUIREMENTS	9
TABLE 1	RECOMMENDED UNDERGROUND SUPPORT STRUCTURES	10

1. SCOPE

The purpose of this specification is to establish the minimum requirements that a precast maintenance hole must meet for consideration as a HAWAIIAN TELCOM standard product.

This document provides various physical, mechanical, electrical, environmental and endurance requirements as well as general test methods or procedures for ensuring compliance to these requirements.

This document is not to be construed as a suggestion to any manufacturer to develop, modify or change any of its products, nor does this document represent any commitment by HAWAIIAN TELCOM or any of its affiliates to purchase any product whether or not it provides the described characteristics.

2. APPLICABLE DOCUMENTS

The following documents of the latest issue form a part of this specification to the extent herein:

AASHTO	American Association of State Highway and Transportation Officials (Paragraph 8.1)
ANSI/ACI 211.1	Selecting Proportions for Normal, Heavyweight and Mass Concrete (Paragraph 5.1.2)
ANSI/ACI 318	Requirements for Reinforced Concrete (Paragraphs 4.2 and 5.2.3)
ASTM A 48	Specification for Gray Iron Castings (CLASS 35-B)
ASTM A 706	Low Alloy Steel Bars for Concrete Reinforcement (Paragraph 5.1.1)
ASTM C 33	Concrete Aggregates (Paragraphs 5.1.2 and 10.3.1)
ASTM C 39	Compressive Strength of Cylindrical Concrete Specimens (Paragraph 5.2.1)
ASTM C 143	Slump of Portland Cement Concrete (Paragraph 5.2.1)
ASTM C 150	Portland Cement (Paragraph 5.1.2)
ASTM C 857	Underground Precast Concrete Utility Structures (Paragraph 4.2)
ASTM C 858	Minimum Structural Design Loading for Underground Precast Concrete Utility Structures (Paragraph 4.2)
AWS D1.4	American Welding Society - Structural Welding Code for Reinforcing Steel (Paragraph 5.1)
GTS 8342	HAWAIIAN TELCOM Specification for Underground Polyvinyl Chloride (PVC) conduit and Fittings (Paragraph 5.2.5.5)

3. DESCRIPTION

3.1 General - Precast maintenance holes are made of deformed reinforced steel (referred to as Rebar in this specification) and concrete. They are accessed by a round hole or multiple holes that extend from the maintenance hole roof or street level and are covered with steel lids that support highway

and sidewalk/pedestrian traffic. Maintenance holes are constructed in various sizes and shapes (primarily in rectangular cube shapes).

Maintenance holes contain telephone communications cables and associated splices, closures, etc. Maintenance holes are normally connected to each other and to poles, splice boxes and buildings through 2" or 4" conduits. Conduits are attached to conduit terminators which are located in the walls of the maintenance hole. A sump hole on the floor of the maintenance hole is provided for water pumping capabilities.

3.2 Accessories - Conduit terminators are placed during initial manufacture except for interset maintenance holes which are placed during maintenance hole installation. Industry standard maintenance hole racking is supplied with the maintenance hole. The racking is used to support cable, splices and splice closures. Pulling irons are cast into the maintenance hole walls and are used to support pulling equipment when pulling cables through the conduits between maintenance holes, splice boxes, poles and buildings.

4. SPECIFIC DESIGN CRITERIA

4.1 All precast maintenance holes (or vaults) shall be designed by a registered structural or civil engineer and all drawings, specifications and calculations shall bear his/her stamp of certification. Manufacturing processes shall be conducted under controlled supervision and quality control standards/procedures to ensure consistency in complying with these specifications.

4.2 Maintenance holes shall be designed in accordance with accepted reinforced concrete theory and shall comply with American Concrete Institute ANSI/ACI 318, except as modified herein. Either the "Working Stress Design" or the "Ultimate Stress Design" method may be used. Also, load design and structure design shall conform to ASTM C 857 and C 858 respectively, except as modified herein.

4.3 The manufacturer shall furnish the HAWAIIAN TELCOM Outside Plant Engineering group and the appropriate HAWAIIAN TELCOM OSP Engineering Manager with a copy of all design drawings, calculations and conditions applicable to installation of the specific precast maintenance hole(s). These items must be approved by the HAWAIIAN TELCOM persons mentioned above prior to purchase of any maintenance holes. The following information must be provided with the above items:

- Maximum depth of cover over the roof (shall not exceed 60").
- Minimum depth of cover (shall be no less than 18").
- Maximum depth to the maintenance hole floor.
- Maximum dimensions shall be given for various allowable headrooms in fluid and hard compact soil.

4.4 The minimum concrete cover over the rebar steel shall be 1.5" on all inside surfaces and 2.0" on outside surfaces in contact with earth.

4.5 The standard clear roof opening is 36" in diameter. Grooves shall be provided around the roof opening to accommodate the tongue of precast 36" diameter concrete grade rings and precast concrete neck cones.

4.6 One 12" diameter sump shall be located in the maintenance hole floor under the center of each ring opening.

4.7 Precast maintenance holes are normally cast in two or three-piece sections depending on the size. Sectional maintenance holes must be used where cables already exist or, where the weight prohibits efficient handling.

4.8 There are two primary designs for conduit main run entries. Entries can be centered in the end walls or splayed to each side of the end walls. The recommended method for standard design is a splayed configuration. Interset versions should also be splayed whenever possible. If it is not possible to splay existing conduit structures, the HAWAIIAN TELCOM Outside Plant Engineer will have to specify the position and size of the conduit cutout opening in the wall(s). NOTE: the HAWAIIAN TELCOM engineer should keep in mind that changes from the standard splayed configuration may cause the precaster to create a custom design and new calculations which may add to the cost of the maintenance hole.

5. PHYSICAL REQUIREMENTS

5.1 Material Requirements

5.1.1 Rebar - All rebar shall meet the requirements of ASTM A 706. Welding procedures are prescribed by the American Welding Society in AWS D1.4.

5.1.2 Concrete Mix - The concrete mix shall consist of the following:

- Only Portland Cement, conforming to ASTM C 150 shall be used. Cement content and admixtures must be sufficient to meet minimum required breaking strength in Paragraph 5.2.1. Refer to ANSI/ACI 211.1 for methods of proportioning cement.
- Stone aggregate shall comply with ASTM C 33. Maximum size for aggregate is 3/4" diameter.
- Concrete mixing water shall be taken from a domestic supply and be free from rust and silt.
- Admixtures other than calcium chloride may be used provided the strength and durability of the concrete is not impaired. Superplasticizers shall be used at the manufacturer's recommended dosage rates to assure a 0.40 maximum water to cement ratio.

5.1.3 Pulling Irons - Pulling irons shall be stainless steel, 7/8" in diameter rated at a minimum of 20,000 pound pullout. Pulling irons shall be installed so that the iron inside the maintenance hole wall is horizontal. The portion inside the wall will lay over a rebar at 90□ perpendicular to the rebar. Each maintenance hole drawing will specify the location of the irons (normally underneath and above the conduit terminators in a vertical position). The distance from the outside tip of the installed iron to the maintenance hole inside wall face shall be a minimum of 3".

5.1.4 Bolt Inserts - Bolt inserts used to mount the maintenance hole racking hardware shall be galvanized mild steel, die-cast zinc alloy or plastic with equivalent torque strength of the zinc alloy type.

5.1.5 Bonding Ribbon - All bonding ribbon must be equal to a #6 ground wire.

5.1.6 Grade Rings and Neck Cones - Maintenance hole cement grade rings and neck cones shall be provided by the maintenance hole manufacturer as specified and approved by HAWAIIAN TELCOM.

5.1.7 Frames and Covers for Maintenance holes - Maintenance hole frames and covers shall be made from domestic steel. The frames for the traffic covers are available in two heights; 5-5/8" and 10". HAWAIIAN TELCOM will specify the type of maintenance hole covers (both traffic and light duty/sidewalk types), and approve the specific cover manufacturer and the associated part numbers. Maintenance hole covers and rings will be bored and tapped (180° apart) to accept locking bolts for security purposes. The light duty/sidewalk frame accepts 1/2" locking bolts and the traffic frame accepts 5/8" locking bolts. Maintenance hole traffic covers will have two 360° one-inch holes in the lid for removal purposes, in-line with the bolt holes, instead of the half-moon slots on the side of the cover. The light duty/sidewalk cover has two slotted holes in the cover. Both frames/covers must meet the requirements of ASTM 1-48 Class 35B. The standard

HAWAIIAN TELCOM logo will be cast into the top of the cover positioned in-line with the removal and security holes.

5.1.8 Cable Racking - Industry standard telephone cable racking shall be furnished and installed by the maintenance hole manufacturer. The "V" racking referred to in Paragraph 5.2.5.4 and the racking for the tunnel maintenance holes, shall be galvanized steel Unistrut or equivalent.

5.2 Mechanical Requirements

5.2.1 Concrete Mix - Concrete mix shall be designed to produce a minimum 28 day strength of 5500 psi when tested in accordance with ASTM C 39.

5.2.2 Forms - Forms used in the manufacture of maintenance holes shall be of sufficient strength to afford conformance of the structure to shape, lines and dimensions specified on approved designs. They shall be assembled sufficiently tight to prevent leakage of mortar.

5.2.3 Rebar Placement - Rebars shall be accurately placed in accordance with ANSI/ACI 318 tolerance and in conformance to the approved design.

5.2.4 Surface Finish - Interior walls and ceilings shall be smooth and free of irregularities and all surfaces shall be sound and free of rock pockets and honeycomb areas. Sections having cracks that may impair the structural strength of water migration are not acceptable. Minor patching is acceptable, as long as strength integrity is not compromised. Interior walls shall be painted with a non-toxic white latex.

5.2.5 Dimensions

5.2.5.1 General Statement - Where dimensions are given in this specification without specific tolerances, or where no dimensions are given, the dimensions and/or tolerances shown in the manufacturer's drawings shall be approved by HAWAIIAN TELCOM.

5.2.5.2 Precast Maintenance hole Sizes - Standard precast maintenance hole sizes are shown in Table 1 of this specification. It is understood that there may be instances where a non-standard maintenance hole size is required. In these instances, the appropriate drawings, specifications, etc., will be prepared by the manufacturer and all applicable requirements of this specification will apply. Before the manufacturer does any work on a non-standard precast maintenance hole design, the local HAWAIIAN TELCOM engineering group must obtain approval from the HAWAIIAN TELCOM Outside Plant Engineering Manager.

5.2.5.3 Knockouts - Knockout sizes for walls to accommodate terminators shall be provided to accepted standard provisions which will allow for the maximum number of conduits practical. One knockout will be located in each end wall above each conduit entry. The knockout size is dependent on the size of the maintenance hole. If a knockout is required in the sidewall of the maintenance hole because of the maintenance hole's specific location, the HAWAIIAN TELCOM Outside Plant Engineer must specify the wall, size and location. Sidewall knockouts should be avoided where possible due to the sharp cable bends and crossovers required in most cases. For sidewall terminations see Paragraph 5.2.5.5.

5.2.5.4 Concrete Inserts For Cable Racking - The "S" cable rack supports shall bolt to 1/2" x 1/2" concrete inserts. Inserts for cable rack supports shall be spaced horizontally on 36" centers for all closure racking spaces. Vertical insert spacing shall be provided to accommodate approved racking described in Paragraph 5.1.8 with the first insert starting 9" below the ceiling. Metallic inserts shall be electrically connected to the rebar ground system. One insert for each vertical rack of each maintenance hole section must be metallic and specified on the drawings. The "V" racking configuration (12' x 12' x 7' size), as well as all tunnel maintenance holes, will also require inserts in the maintenance hole floor and ceiling as specified by the HAWAIIAN TELCOM Outside Plant Engineering Staff Support group.

5.2.5.5 Conduit Terminators - Conduit terminators must accept a 4.5" outside diameter round bore circuit per HAWAIIAN TELCOM Specification GTS-8342. The terminator shall have a minimum cementing surface of 3" from the outside of the maintenance hole where the 4.5" conduit is inserted into the terminator. HAWAIIAN TELCOM to specify and approve the source of the terminators installed by the manufacturer. See Table 1 for the number of terminators per each maintenance hole size. The center-to-center distance between terminators is 8". The distance from the surface of the inside wall to the center of the terminator is 10". If terminators need to be installed on a specific sidewall because the maintenance hole can't be placed some distance from an intersection, the HAWAIIAN TELCOM Outside Plant Engineer must specify which wall(s) will require the terminators. The number of terminators should not exceed the number of end wall terminators for the specific maintenance hole size as shown on Table 1.

5.2.6 Identification - All precast maintenance holes shall be identified with the manufacturer's name/model number/date of concrete pour. The markings shall be located on the inside and outside roof near the roof opening. They will be placed so that they can be seen after installation.

6. ELECTRICAL REQUIREMENTS

6.1 Grounding System - The rebars in each maintenance hole section shall be welded together at specified points to attain an adequate grounding system (25 ohms maximum). One insert (metallic tape only) for each vertical cable rack position per each maintenance hole section, shall be electrically connected by a #6 equivalent wire which shall also be effectively connected to the rebar grounding system. All rebar are to be welded together at the ground connection locations. Corrosion resistant metal or plastic tags shall be fastened to the grounded inserts, or maintenance hole section adjacent to the inserts, and shall be stenciled to read "GRD". A bonding ribbon (#6 equivalent) shall be provided in the center of each splicing bay to run the same length as the racking, including the space between racks of a sectional hole. The ribbon inserts shall be 1/4" bronze and one per maintenance hole section per ribbon shall be electrically connected to the ground system.

7. ENVIRONMENTAL REQUIREMENTS

7.1 All precast maintenance holes will be designed to provide a dry and watertight structure upon installation.

8. ENDURANCE REQUIREMENTS

8.1 Dead and Live Loads - Loading for dead loads, traffic loads and impact loads shall meet H20-A16 AASHTO (American Association of State Highway and Transportation Officials) for highway bridges. Also, loads due to a ground water table of three feet from finished grade shall have added to it a surcharge of two feet of earth applied in calculating the design conditions on the vertical walls.

8.2 Pulling Loads - Cable pulling loads shall be considered in the design independent of normal soil pressures. A minimum pulling load of 20,000 pounds shall be used for the installation design of pulling irons.

8.3 Concrete Curing/Strength - After placing the concrete in forms and following the initial concrete set, the concrete shall be cured to develop its required strength. If steam curing is used, it requires a minimum of two hours of steam at a temperature ranging from 145 to 160°F. The steam shall be applied no sooner than one hour or no later than four hours after the concrete is poured. The maximum temperature rise from ambient shall be 40°F per hour and the total steam cure cycle shall be a minimum of five hours from completion of the concrete pour. Adequate instrumentation shall be employed to control and monitor steam temperature during curing. Steam

cured units shall not be removed from the forms until sufficient strength has been obtained to withstand any structural strain to which they are subjected during and following the form stripping operation. After the units are removed from the forms, minor patching will be performed. NOTE: The completed product must be held by the manufacturer for a minimum of 7 days after the pouring operation prior to shipment.

9. REGULATORY AND SAFETY

Products provided to this specification shall meet Federal/National codes and other applicable regulatory and safety requirements.

10. PRODUCT SUPPORT

Products provided by this specification shall be supported on an ongoing basis by the following means:

10.1 Documentation

Documentation shall be available to ensure support of the product throughout its useful life. Documentation is required for application, engineering, installation and maintenance of the product as well as technical product specific information.

10.2 Technical Support

Support of the product shall be provided for the areas of planning, engineering, procurement, general liaison and technical communication. On site assistance shall be provided when required.

10.3 Quality Control/Quality Assurance Program

The manufacturer shall maintain, and be able to demonstrate to HAWAIIAN TELCOM, an effective quality control/quality assurance procedure such as the National Precast Concrete Association (NPCA) Certification Program, or equivalent. The program should include records, facilities, material controls, tests and inspections throughout the manufacturing process sufficient to assure that the product will conform to all the specified requirements. Some specific product analyses and record keeping include the following:

10.3.1 Aggregate - Analysis of aggregate must be performed regularly in respect to cleanliness and conformance to specified requirements of ASTM C 33.

10.3.2 Concrete - Maintain records on date of concrete pour, type of mix, mixer used, type of products made and compressive strength achieved at seven (7) and twenty-eight (28) days. If mixed cement is delivered to the manufacturer, certified mill test reports will be obtained, reviewed and placed on file.

10.4 Product Enhancement

The manufacturer will undertake a continuing program to enhance the product and manufacturing process in order to produce economic, feature and technology improvements. However, product changes shall not be instituted without prior approval of HAWAIIAN TELCOM.

11. WARRANTY

The manufacturer/vendor shall specify their terms and conditions on product warranty and the method of investigating and resolving disagreements.

12. TECHNICAL COMPLIANCE

12.1 Product Performance Evaluation

The technical evaluation of products provided to this specification is under the direction of HAWAIIAN TELCOM. The manufacturer/vendor shall be required to provide samples, test data and/or results of laboratory tests of products to be evaluated to this specification. The evaluation is to assure that the product meets the technical requirements detailed in this specification.

12.2 Manufacturer/Vendor Technical Qualification

The technical qualification of the manufacturer/vendor is under the direction of HAWAIIAN TELCOM. The qualification is required to assess the technical capability of the supplier as well as the acceptability of the product to the requirements of this specification. The assessment determines the supplier's capability to consistently manufacture a quality product, using a controlled process, to meet the specification requirements.

12.3 Quality Assurance Audit

Manufacturer/vendors chosen by HAWAIIAN TELCOM to provide products to this specification will be required to submit to periodic audits of their quality assurance and quality control programs and processes. These audits are required to assure product quality and consistency and are under the direction of HAWAIIAN TELCOM. These audits will verify the manufacturer's efforts in the following areas:

- Raw Material Incoming Inspection
- In Process Quality Control Testing
- End Product Quality Assurance Testing
- GTS Requirements Verification
- Nonconformance Rejection
- Equipment Calibration

13. COMMERCIAL REQUIREMENTS

Commercial requirements for products approved for HAWAIIAN TELCOM Standardization by this specification will be arranged by the company sourcing department. These requirements will include price, delivery, distribution and other commercial arrangements as deemed necessary by sourcing and agreed to by the Manager-OSP Engineering. Since these products are often purchased and installed by parties on contract to HAWAIIAN TELCOM, it is expected that the manufacturer will honor HAWAIIAN TELCOM's commercial arrangements with the company contracting to HAWAIIAN TELCOM.

TABLE 1
RECOMMENDED UNDERGROUND SUPPORT STRUCTURES

SIZES	# TERMINATORS EACH END WALL	KNOCK-OUTS EACH END WALL	MAX SPACING BETWEEN BOXES
METER BOX			
436T – 14" X 20"	1	NONE	150'
PULL BOXES			
435TB – 2' X 4'	2-4" C 1-4" C & 2-2" C	NONE	250'
435TB-B6 – 2' X 6'	Same as 2' X 4'	NONE	250'
HAND HOLE			
4' X 6' X 4'	4-4" C	2	350'
MAINTENANCE HOLES			
4' X 6'6" X 6'6"	4	1	850'
5' X 10'6" X 6'6"	8	2	850'

NOTE 1 There may be a need for custom size maintenance holes to fit a certain situation. Refer to Paragraph 5.2.5.2 for approval process.

NOTE 2 Separate HAWAIIAN TELCOM part numbers will be assigned to each size of a regular single maintenance hole and interset maintenance hole.

NOTE 3 Terminators and racking locations will be specified on the drawings prior to HAWAIIAN TELCOM approval.

SECTION 3:

STANDARD PRE-CAST BOX CONFIGURATIONS

Meter Box	436T	Drawing #34024 and #34024A Service Drops Only	
Pull Boxes	2' X 4' 2' X 6'	435TB 435T-B6	Drawing #34056 Drawing #34078
Hand Hole	4' X 6' X 4'	HTCO HH Type 1 (Modified)	
Maintenance Hole	4' X 6'-6" X 6'-6"	HTC Code: 180014 & 180015 & Drawing #34029	
Maintenance Hole	5' X 10'-6" X 6'-6"	HTC Code: 180016 & 180017	

METER BOX
436T

Drawing #34024 and #34024A

For Service Drops only

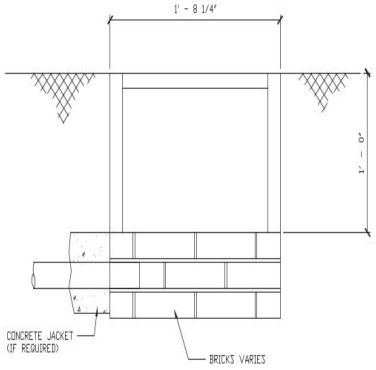

DETAIL OF TYPE 'B' METER BOX
STANDARD PRACTICE NO. 436T

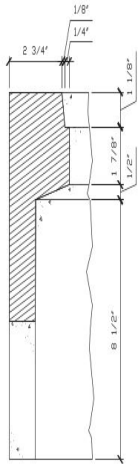

SECTION F-F

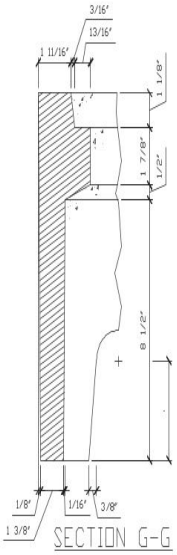

SECTION G-G

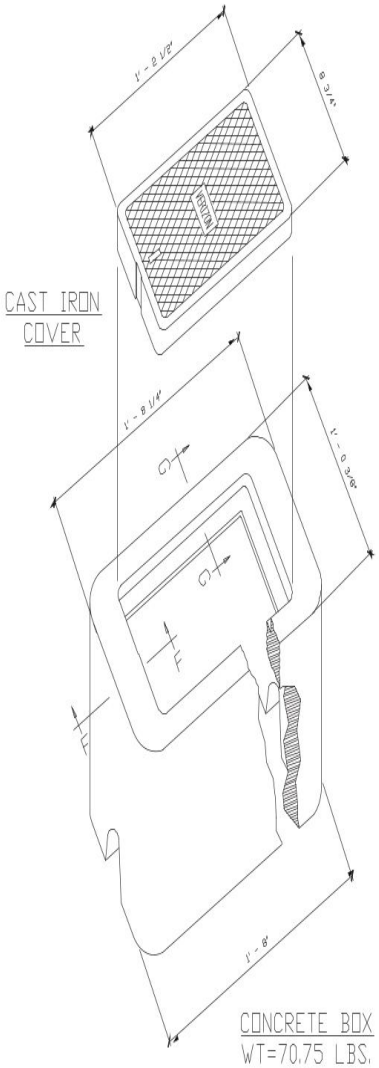

CONCRETE BOX
WT=70.75 LBS.
NTS

NOTES:
THICKNESS DIMENSIONS ARE MET. ADD 1/8" FOR RAISED SURFACE. USE 1" HIGH VERTICAL LETTERS. METER COVER SHALL BE GRAY CAST IRON, FREE OF BLISTER, BLOWHOLES, WARPAGE AND COLD SMUTS.

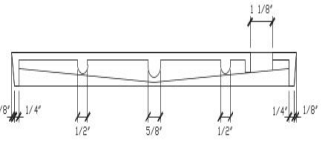

SECTION D-D

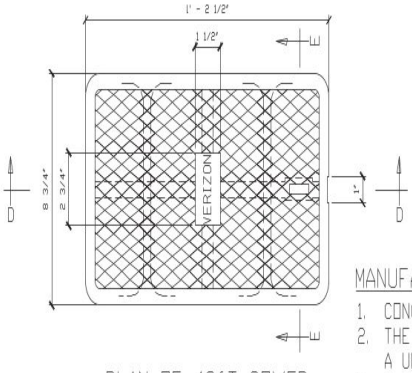

PLAN OF 436T COVER
WT=17 LBS.

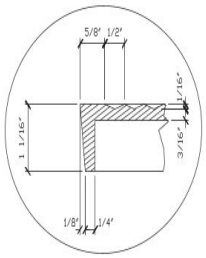

CHECKERED PATTERN
ENLARGED DETAIL

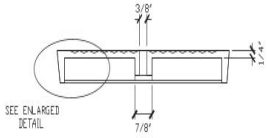

SECTION E-E

MANUFACTURER'S NOTES

1. CONCRETE COMPRESSIVE STRENGTH 5000 PSI @ 28 DAYS.
2. THE TOP SURFACE OF THE PULLBOX RIM SHALL BE TRAWLED TO A UNIFORM, SMOOTH TEXTURE, AND THE CORNERS ROUNDED.
3. ALL CONCRETE SHALL BE CURED FOR A PERIOD OF NOT LESS THAN 7 DAYS BY WATER CURING, SATURATED SAND CURING, CURING COMPOUNDS, OR WATERPROOF PAPER.
4. CONTRACTOR SHALL BE RESPONSIBLE FOR CONDUCTING COMPRESSIVE STRENGTH TESTS OF CONCRETE TO ENSURE THAT 5000 PSI CONCRETE IS BEING USED.

436T PULLBOX COVER
CAST IRON

NOTE: DRAWINGS NOT TO SCALE

WORK SAFELY HIGH VOLTAGE	DISTRIBUTION	JOB PRE-FIELDED BY:	DATE PRE-FIELDED	PROGRAM CODE: PLANNING AREA
	ASSIGNMENT	PROPRIETARY INFORMATION FOR USE BY AUTHORIZED SITE EMPLOYEES ONLY		CE
	DZNG NOVATION	CODED		DATED
	CEC PLANNING	PIPELINE NO.	ENGINEER TEL.	436T PULLBOX
		CPA AFFECTED YES NO	DRAWN BY JT DATE 04-28-2023	
		SALES AFFECTED	APPROVED DAT 1 OF 1	
			HAWAIIAN TELCOM	34024A

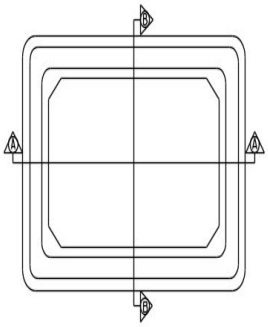

TOP VIEW

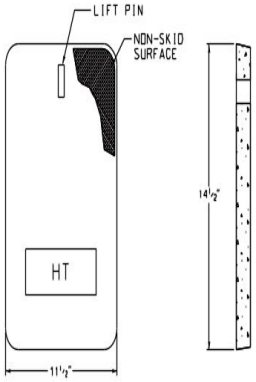

RPM COVER

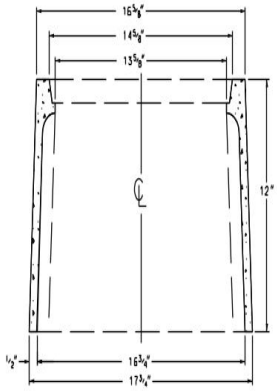

SECTION A-A

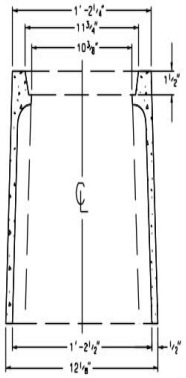

SECTION A-A

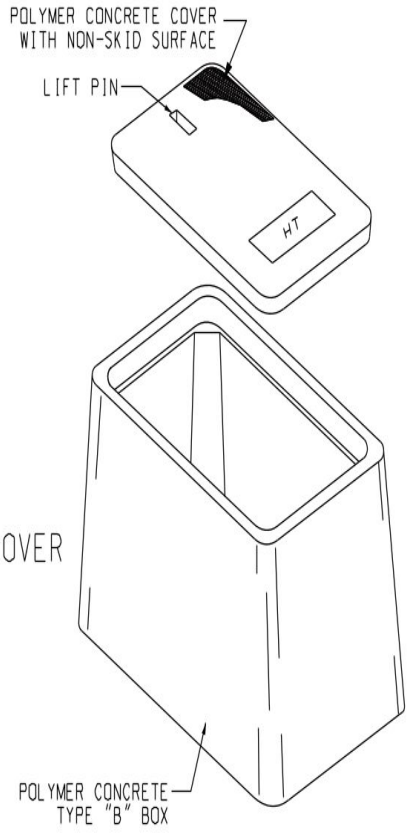

METER BOX & COVER

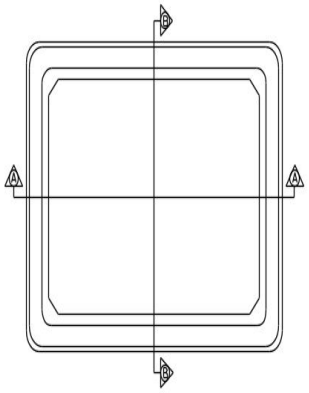

TOP VIEW

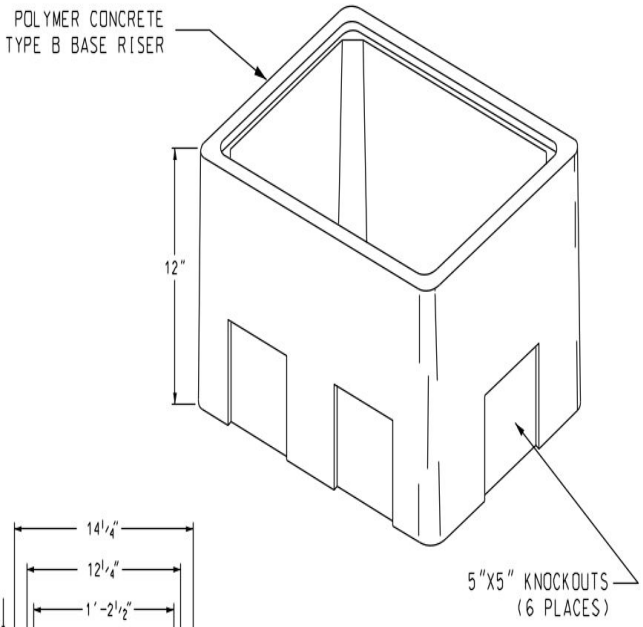

METER BOX EXTENSION

NOTE:

1. ALL POLYMER CONCRETE BOXES AND COVERS SHALL BE MANUFACTURED WITH MATERIAL CONSISTING OF CALCAREOUS AND SILICEOUS STONE, GLASS FIBERS AND THERMOSET POLYESTER RESIN, AND "CONCRETE GREY" IN COLOR.
2. EACH RPC BOX AND COVER ASSEMBLY SHALL BE CAPABLE OF WITHSTANDING A VERTICAL LOAD OF 16,000 LBS.

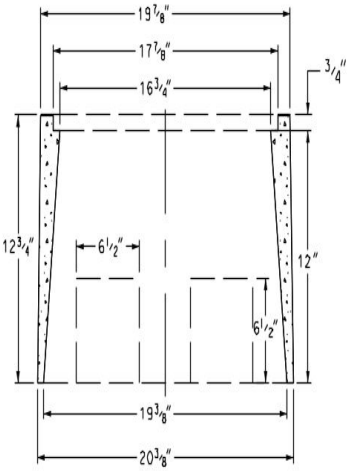

SECTION A-A

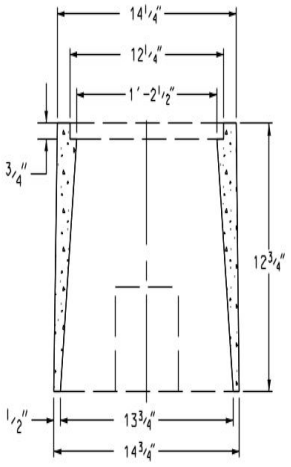

SECTION B-B

	JOB PRE-FIELDED BY:	DATE PRE-FIELDED:	PROGRAM CODE: PLANNING AREA:
	PROPRIETARY INFORMATION FOR USE BY AUTHORIZED STE EMPLOYEES ONLY		C.O.
	CODES:		SHT(S):
	PIPELINE NO.	ENGINEER C. CHOY TEL 808.840.5822	TYPE "B" METER BOX & COVER AND METER BOX EXTENSION 436T
	CPs AFFECTED YES NO	DRAWN BY D. MENDTO DATE 02/20/2003	
	VALVES AFFECTED	APPROVED SHT 1 OF 1	
		HAWAIIAN TELCOM	34024

PULL BOX
2’ X 4’ 435TB

Drawing #34056

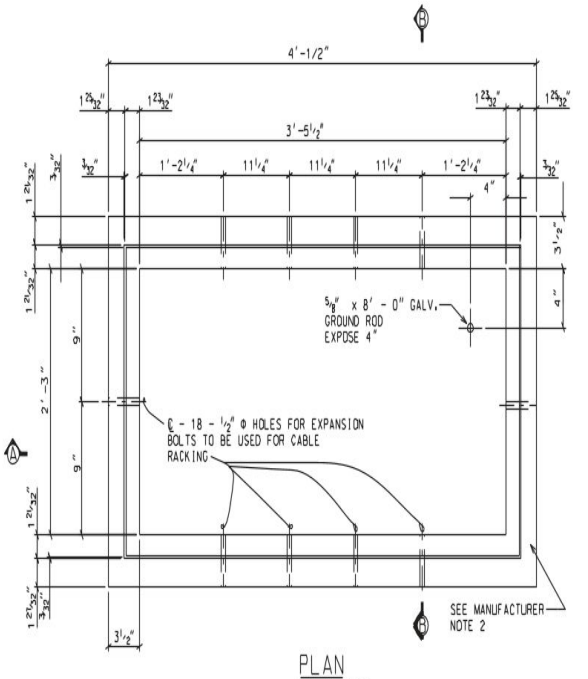

PLAN
NOT TO SCALE

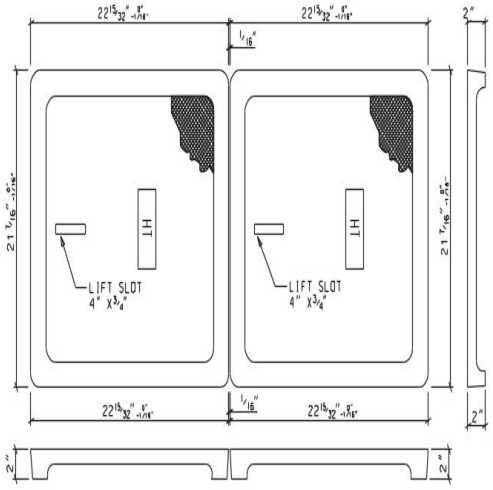

POLYMER COVER PLATES
NOT TO SCALE

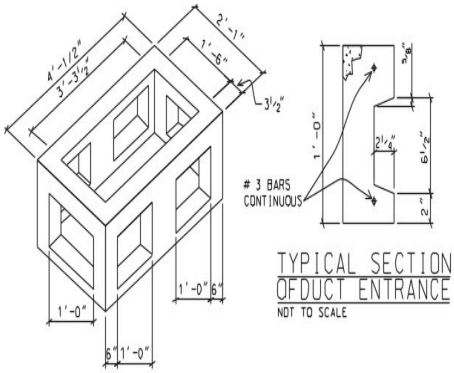

TYPICAL SECTION OF DUCT ENTRANCE
NOT TO SCALE

TYPICAL APPLICATION - PRECASTED BASE
(W/ FUTURE DUCTS ON ALL SIDES) CONCRETE COMPRESSIVE STRENGTH 5000 PSI @ 28 DAYS
(SEE INSTALLATION NOTE 2)
NOT TO SCALE

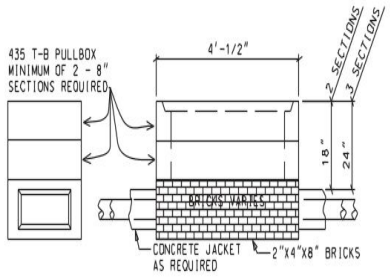

TYPICAL APPLICATION - PRECAST BASE
(SEE NOTE 2)
NOT TO SCALE

TYPICAL APPLICATION - BRICK BASE (SEE NOTE 5)
NOT TO SCALE

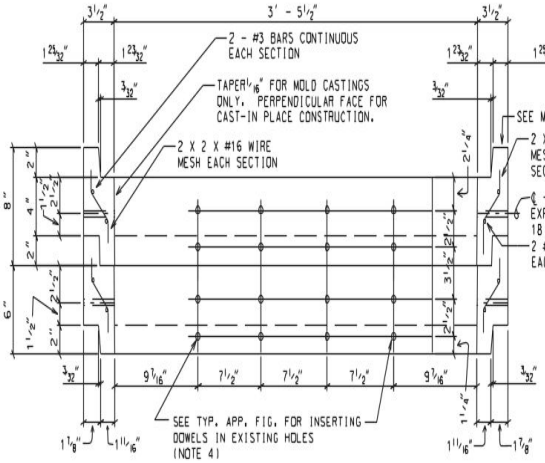

SECTION "A - A"
NOT TO SCALE

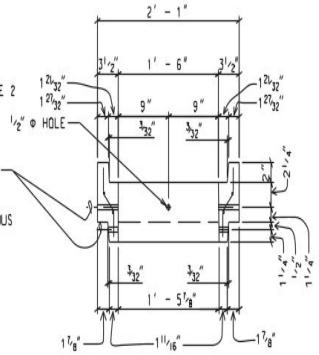

SECTION "B - B"
NOT TO SCALE

INSTALLATION NOTES

1. A MINIMUM OF TWO (2) PRECAST SECTIONS MUST BE USED ON ALL INSTALLATIONS.
2. CONCRETE PRECASTED BASE SHALL BE USED IN NEW CONSTRUCTION.
3. AT NO TIME SHALL CEMENT MORTAR, WOOD OR ANY OTHER MATERIAL BE USED BETWEEN PRECAST SECTIONS. LEVELING OR RAISING OF BOXES TO GRADE MUST BE DONE AT BRICKWORK SECTION USING CEMENT MORTAR, THE PERMANENT INSTALLATION OF WOODEN WEDGES TO ACCOMPLISH THIS PURPOSE WILL NOT BE ACCEPTED.
4. INSERT DOWEL (1/2" GALV. BOLTS) INTO EXISTING TOP 1/2" HOLES IN SIDES OF BOX SHOWN IN TYPICAL APPLICATION FIGURE. THIS IS A METHOD OF KEYING THE INSTALLED BOX TO THE SURROUNDING CONCRETE THAT MAY BE PLACED.
5. BRICKS MAY BE USED AS AN ALTERNATIVE ONLY WHEN INTERCEPTING EXISTING DUCTS.
6. THE MINIMUM LAYERS OF BRICKS TO BE USED SHALL ALWAYS BE AT LEAST ONE (1) LAYER LOWER THAN THE LOWEST DUCT ENTERING THE PULLBOX. AT NO TIME, HOWEVER, SHALL THERE BE LESS THAN TWO (2) LAYERS OF BRICKS ON EACH INSTALLATION.

MANUFACTURER NOTES

1. CONCRETE COMPRESSIVE STRENGTH FOR ENCLOSED PULLBOX SHALL BE 5,000 PSI @ 28 DAYS.
2. THE TOP SURFACE OF THE PULLBOX RIM SHALL BE TROWELED TO A UNIFORM, SMOOTH TEXTURE AND THE CORNERS ROUNDED.
3. ALL CONCRETE SHALL BE CURED FOR A PERIOD OF NOT LESS THAN 7 DAYS BY WATER CURING, SATURATED SAND CURING, CURING COMPOUND OR WATER PROOF PAPER.
4. CONTRACTOR SHALL BE RESPONSIBLE FOR CONDUCTING COMPRESSIVE STRENGTH TESTS OF CONCRETE TO ENSURE THAT 5,000 PSI CONCRETE IS BEING USED.
5. ALL STEEL MEMBERS USED IN STEEL COVER APPLICATIONS SHALL BE HOT-DIPPED GALVANIZED AFTER FABRICATION.

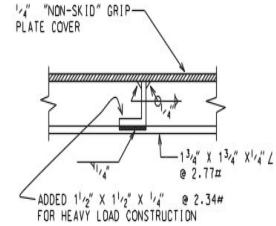

HEAVY LOAD CONSTRUCTION DETAIL
NOT TO SCALE

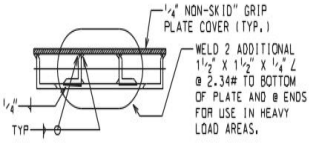

CROSS SECTION OF COVER
NOT TO SCALE
APPROX. WEIGHT 65 LB MAXIMUM.
CONCENTRATED LOAD OVER COVER = 16,000LBS.

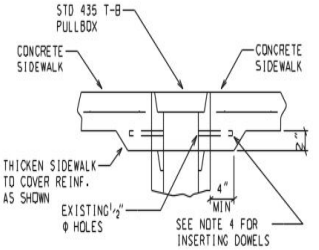

TYPICAL APPLICATION - SIDEWALK INSTALLATION
SCALE: 1 1/2" = 1'-0"

HEAVY CONSTRUCTION LOAD AREA AND AREAS WITHOUT SIDEWALK

		JOB PRE-FIELDED BY:	DATE PRE-FIELDED:	PROGRAM CODE: PLANNING AREA:
WORK DAMPLY HIGH VOLTAGES	DESCRIPTION	PROPRIETARY INFORMATION FOR USE BY AUTHORIZED HT EMPLOYEES ONLY		C.O.
POWER CO.	DESIGNED BY	CODES:		SHT(S)
LV PHONE	DESCRIPTION	PIPELINE NO.	ENGINEER C. CHOY TEL 840-5822	435 T-B PULLBOX
CONNECTED	DRAWING	CPA AFFECTED YES NO	DRAWN BY C. TOM DATE 11-28-01	
GROUNDED			APPROVED SHT 1 OF 1	
COMMENTS		SALES AFFECTED	HAWAIIAN TELCOM	34056
	TITLE			

PULL BOX
2’ X 6’ 435TB6

Drawing #34078

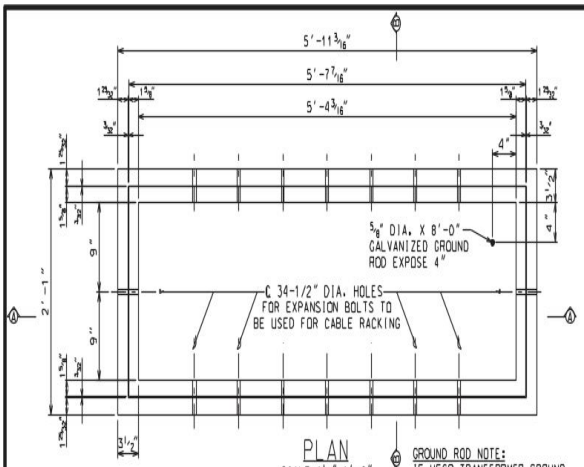

PLAN

SCALE: $1\frac{1}{2}" = 1'-0"$

GROUND ROD NOTE:
IF HECO TRANSFORMER GROUND CONNECTION IS AVAILABLE, GROUND ROD MAY BE OMITTED.

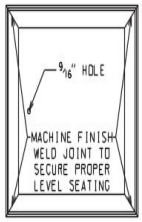

SECTION D

BOTTOM FRAME
BOTTOM VIEW

MANUFACTURER'S NOTE:
CONCRETE COMPRESSIVE STRENGTH IS 3,000 PSI ON LOWER 6" OF PULLBOX SECTION AND 5,000 PSI @ 28 DAYS ON UPPER 2" (TO REDUCE CHIPPING).

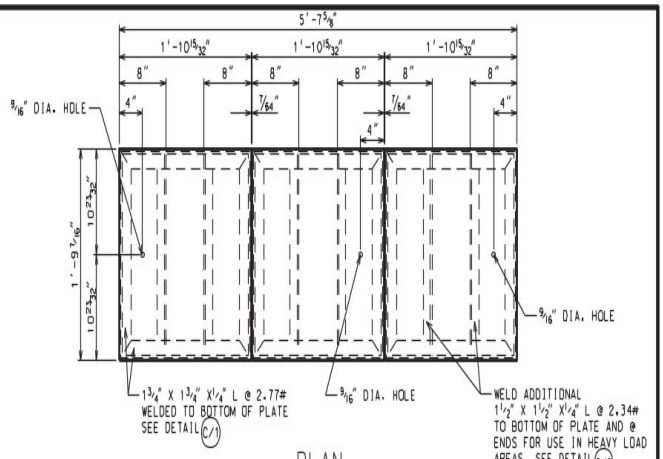

PLAN

SCALE: $1\frac{1}{2}" = 1'-0"$

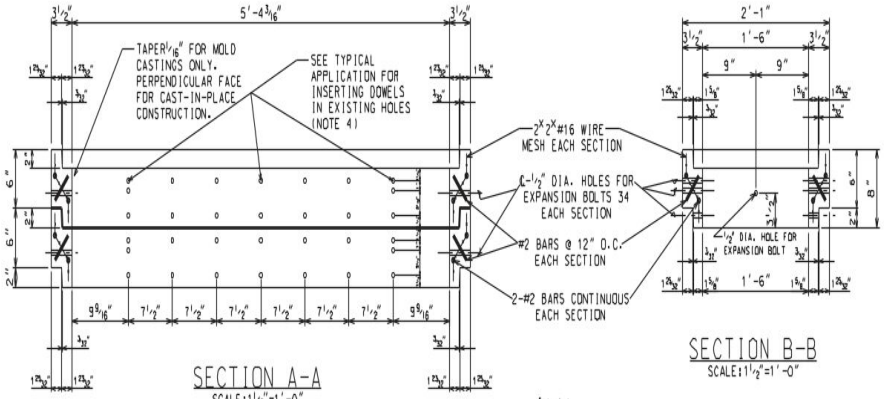

SECTION A-A

SCALE: $1\frac{1}{2}" = 1'-0"$

SECTION B-B

SCALE: $1\frac{1}{2}" = 1'-0"$

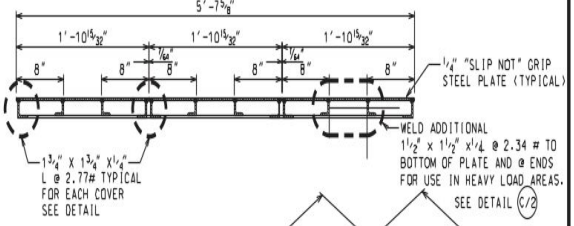

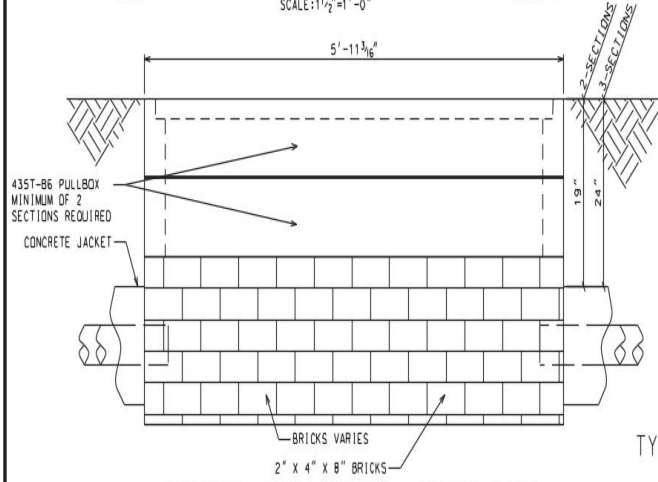

TYPICAL APPLICATION - BRICK BASE

(SEE NOTE 5)

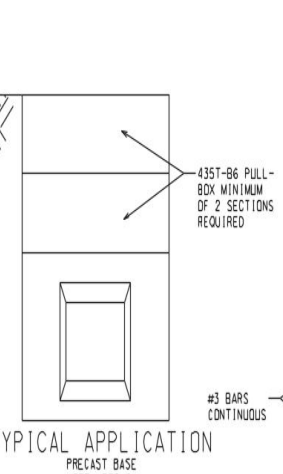

TYPICAL APPLICATION

PRECAST BASE
(SEE NOTE 2)

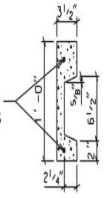

TYPICAL SECTION OF DUCT ENTRANCE

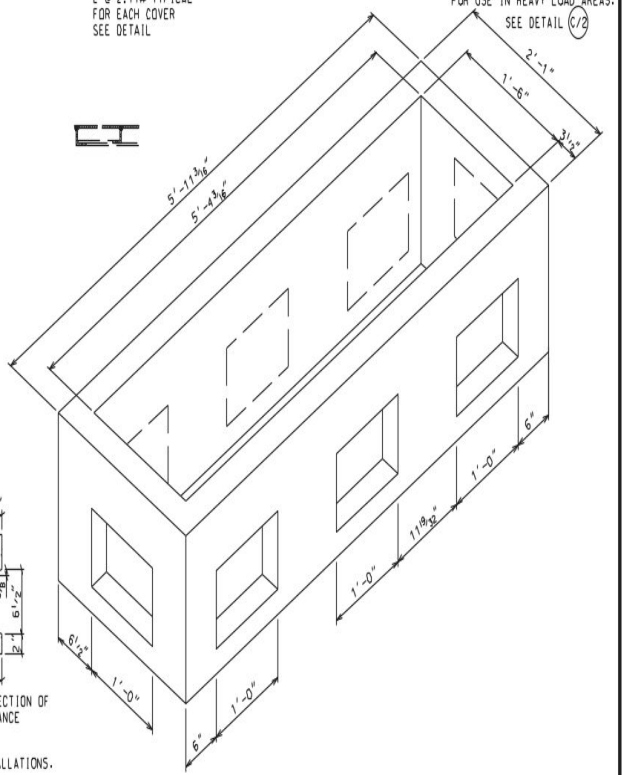

TYPICAL APPLICATION-PRECASTED BASE (W/FUTURE DUCTS ON ALL SIDES)

CONCRETE STRENGTH 3,000 PSI @ 28 DAYS, REINFORCED WITH 1 EA. #3 REBAR CONTINUOUS TOP

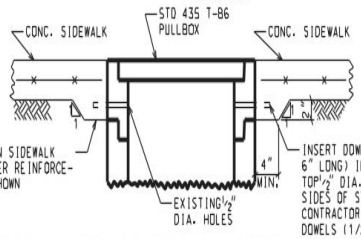

TYPICAL APPLICATION - SIDEWALK INST.

SCALE: $1\frac{1}{2}" = 1'-0"$

INSTALLATION NOTES

1. A MINIMUM OF TWO (2) PRECAST SECTIONS MUST BE USED ON ALL INSTALLATIONS.
2. CONCRETE PRECASETED BASE SHALL BE USED IN NEW CONSTRUCTION.
3. AT NO TIME SHALL CEMENT MORTAR, WOOD OR ANY OTHER MATERIAL BE USED BETWEEN PRECAST SECTIONS. LEVELING OR RAISING OF BOXES TO GRADE MUST BE DONE AT BRICKWORK SECTION USING CEMENT MORTAR. THE PERMANENT INSTALLATION OF WOODEN WEDGES TO ACCOMPLISH THIS PURPOSE WILL NOT BE ACCEPTED.
4. INSERT DOWELS (1/2" GALVANIZED BOLTS INTO EXISTING TOP 1/2" Ø HOLES IN SIDES OF BOX SHOWN IN TYPICAL APPLICATION FIGURE. THIS IS A METHOD OF KEYING THE INSTALLED BOX TO THE SURROUNDING CONCRETE THAT MAY BE PLACED.
5. BRICKS MAY BE USED AS AN ALTERNATIVE ONLY WHEN INTERCEPTING EXISTING DUCTS.
6. THE MINIMUM LAYERS OF BRICKS TO BE USED SHALL ALWAYS BE AT LEAST ONE (1) LAYER LOWER THAN THE LOWEST DUCT ENTERING THE PULLBOX, AT NO TIME, HOWEVER, SHALL THERE BE LESS THAN TWO (2) LAYERS OF BRICKS ON EACH INSTALLATION.

WORK RAISED HIGH VOLTAGE	DESIGNED	JOB PRE-FIELDED BY DATE PRE-FIELDED	PROGRAM CODE: PLANNING AREA:
POWER CO.	DRAWN	PROPRIETARY INFORMATION FOR USE BY AUTHORIZED HT EMPLOYEES ONLY	C.O.
KV PHASE	CHECKED	CODES:	DATES:
CONNECTED	APPROVED	PIPELINE NO. ENGINEER TEL	435T-B6 PULLBOX (3 COVER)
SPRUNGER		CPS AFFECTED YES NO DRAWN BY DATE	
COMMENTS		APPROVED SHT OF	
		SALES AFFECTED	HAWAIIAN TELCOM, INC.
			34078

HAND HOLE
4’ X 6’ X 4’

HTCO HH Type 1 (Modified)

4'-0" x 6'-0" x 4'-0" DEEP HTCO HANDHOLE TYPE 1
(MODIFIED)

NOTES:

- ☐ HANDHOLE DESIGNED IN ACCORDANCE WITH HTCO STANDARDS USING 4,000 PSI COMPRESSIVE STRENGTH CONCRETE AND 60,000 PSI YIELD STRENGTH ASTM A-615 STEEL REINFORCEMENT PER CALCS.
- ☐ ALL CONCRETE AND REINFORCED CONCRETE WORK SHALL BE DONE IN ACCORDANCE WITH APPLICABLE PROVISIONS OF THE AMERICAN CONCRETE INSTITUTE'S BUILDING CODE REQUIREMENTS FOR REINFORCED CONCRETE (ACI-LATEST) AND ASTM C94.
- ☐ HANDHOLE TO BE PLACED IN A 6" BASE OF CRUSHER RUN FOR EASE OF INSTALLATION AND EVEN LOAD DISTRIBUTION, 1-1/2" MAX. AGGREGATE SIZE.
- ☐ PRODUCT TO BE STENCILED:
  WALKER INDUSTRIES
  DATE OF POUR
  PRODUCT MARK NO.

1. 8½"ø SUMP HOLE (2 TOTAL).
2. 1"ø GROUND ROD HOLE (2 TOTAL).
3. 18 HOLE CABLE RACK ½" CABLE RACK INSERT (PENNSYLVANIA THREADED INSERT IN-050).
4. 4" TERMINATORS, TYPICAL (8 TOTAL).
5. ⅞"ø PULLING IRON (4 TOTAL).
6. 2-TON LIFTING INSERT, JACKET MOUNTED (8 TOTAL).
7. #4 BARS @ 8" O.C. HORIZONTAL.
8. #4 BARS @ 10" O.C. VERTICAL.
9. #4 BARS @ 10' O.C. BOTH WAYS.
10. ⅜"ø x 5.5" LONG ANCHOR BAR.
11. 2" x 4" x ¼" FLAT BAR.
12. 3" x 2" x ¼" ANGLE x 3'-3" LONG.
13. 4" I-BEAM (GALV.) 7.7 LBS./L.F.
14. 2" x 2" x ⅜" ANGLE FRAME.
15. ARMORCAST POLYMER COVER, NON-SKID SURFACE (6-TOTAL).
16. BASE SECTION, 2'-6"D, WT. = 5,694 LBS.
17. RISER SECTION, 1'-6"H, WT. = 2,188 LBS.
18. RAM-NEK OR MORTAR JOINT (BY CONTR.).

THE FOLLOWING MATERIALS TO BE SHIPPED WITH EACH HANDHOLE:

(a) ARMORCAST POLYMER COVER, NON-SKID SURFACE (6-REQUIRED).
(b) 4" GALVANIZED I-BEAM, 7.7 LBS./L.F. (2-REQUIRED).
(c) RAM-NEK JOINT SEALANT, 20 LIN. FT.

ORDERING INFORMATION:

4'x6'x4' HTCO TYPE 1 MODIFIED FOR ASSEMBLY AS SHOWN.
APPROVED FOR HTCO SPECIFICATIONS.
TOTAL WEIGHT OF ASSEMBLY SHOWN IS 7,882 LBS.

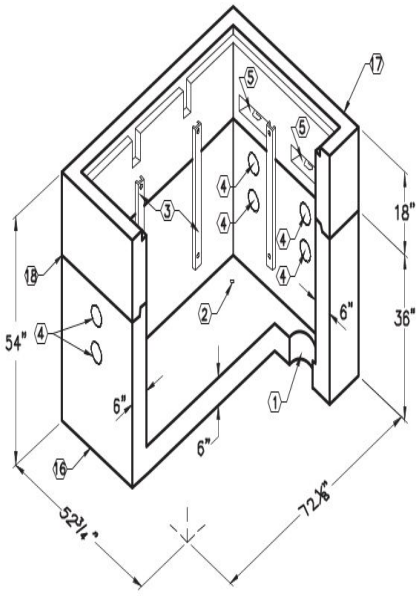

Walker Industries, Ltd.
P.O. BOX 1568 KAHULUI, HI. 96733
Ph. (808) 877-3430 Fax: (808) 871-7282

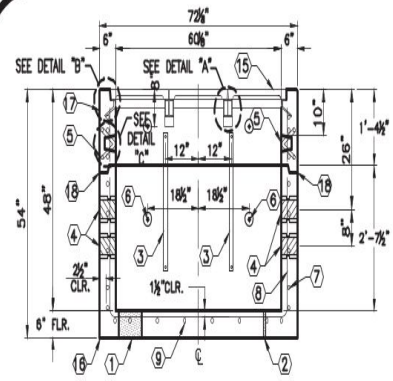

SECTION "A-A"

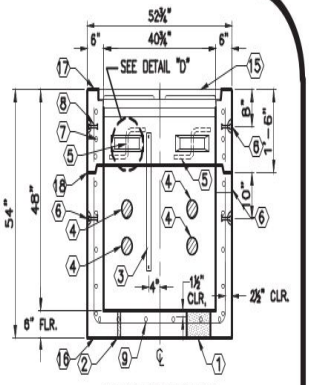

SECTION "B-B"

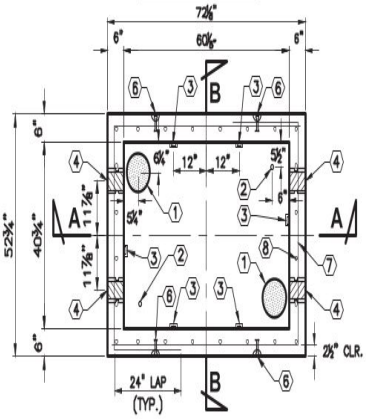

WALL PLAN

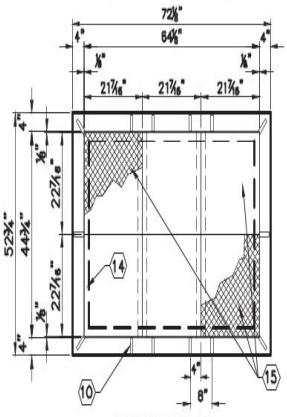

COVER PLAN

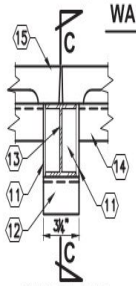

DETAIL "A"

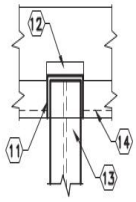

DETAIL "A" TOP VIEW

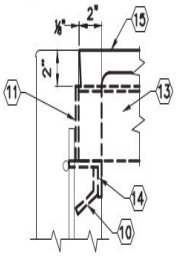

SECTION "C-C"

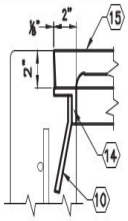

DETAIL "B"

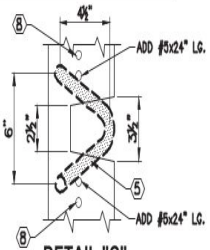

DETAIL "C"

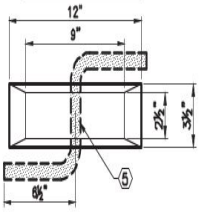

DETAIL "D"

Walker Industries, Ltd.
P.O. BOX 1568 KAHULUI, HI. 96733
Ph. (808) 877-3430 Fax: (808) 871-7282

4'x6'x4' HTCO HH TYPE 1 (MODIFIED) Page 1
6-04-19

MAINTENANCE HOLE
4’ X 6’-6” X 6’-6”

Item ID:	Part #:
180014	HTC 4 x 6.5 x 6.5
180015	HTC 4 x 6.5 x 6.5-1

Drawing #34029 – Adjustable handhole

4'–0" x 6'–6" x 6'–6" HAWAIIAN TELCOM MANHOLE

NOTES:

- MANHOLE DESIGNED IN ACCORDANCE WITH AASHTO H–20 LRFD TRAFFIC BRIDGE LOADING USING 5,500 PSI COMPRESSIVE STRENGTH CONCRETE AND 60,000 PSI YIELD STRENGTH ASTM A–615 OR A–706 STEEL REINFORCEMENT PER CALCS. No. 466–201–33
- LIMIT OF COVER OVER ROOF SECTION IS 1'–6" TO 5'–0". WATER TABLE BASED ON THREE FEET.
- MANHOLE TO BE PLACED ON A MIN. 6" BASE OF CRUSHER RUN FOR EASE OF INSTALLATION AND EVEN LOAD DISTRIBUTION.
- INTERIOR CONCRETE BUG HOLES TO BE HAND SACKED PRIOR TO BEING PAINTED.
- ALL WALLS AND CEILINGS SHALL BE PAINTED WHITE.
- PRODUCT TO BE STENCILED: (INSIDE AND OUTSIDE)

  MANUFACTURER
  DATE OF POUR
  PRODUCT PART NO.
  WEIGHT

1. UV466–B78–33, 78" BOTTOM SECTION. WT.14,800 lbs.
2. UV466–T8–33, 8" TOP SLAB. WT. 3,000 lbs.
3. A1134 30" DIA. TRAFFIC RING (6") & COVER W/ MARK AS REQ'D.
4. 7/8" x 6" STAINLESS STEEL PULL IRON. LOCATE AS FOLLOWS: BOTTOM SECTION (2) CORE MTD.
5. MN36–R6, 12 – 36" DIA RINGS AS REQ'D
6. 12" x 13" DIA. SUMP x 4 1/2" DEEP WITH 1/4" SAFETY PLATE COVER. LOCATE AS FOLLOWS: BOTTOM SECTION (1) CORE MTD.
7. 7" x 12" K.O. x 4 1/2" DEEP. DRAFT AS FOLLOWS: 1" TYP. BOTTOM SECTION (2) SHELL MTD.
8. 7/8" DIA. x 3 3/8" STAINLESS STEEL RECESSED PULL IRON. LOCATE AS FOLLOWS: TOP SLAB (4) TABLE MTD.
9. 1/2" PLASTIC INSERT. LOCATE AS FOLLOWS: BOTTOM SECTION (24) CORE MTD.
10. 4" DIA. TERMS (SCH. 40). LOCATE AS FOLLOWS: BOTTOM SECTION (8) SHELL MTD.
12. 1/2" BRONZE INSERT WELDED TO THE INTEGRAL STEEL REBAR CAGE. LOCATE AS FOLLOWS: BOTTOM SECTION (6) CORE MTD.
13. 1/4" BRONZE INSERT WELDED TO THE INTEGRAL STEEL REBAR CAGE. LOCATE AS FOLLOWS: BOTTOM SECTION (2) CORE MTD.
14. 1/4" DIA. P15T INSERT; BOTTOM SECTION (2) CORE MTD.

THE FOLLOWING MATERIAL TO BE SHIPPED WITH THE MANHOLE

a) 7/8" x 1 3/4" GASKET (45 FT. REQ'D.)
b) A–3383 GALVANIZED LADDER STEPS (2 REQ'D.)
c) A–3600 GALVANIZED LADDER 8' (1 REQ'D.)
d) FOR RACKING PACKAGE SEE DRAWING No. CR–466FM78–33

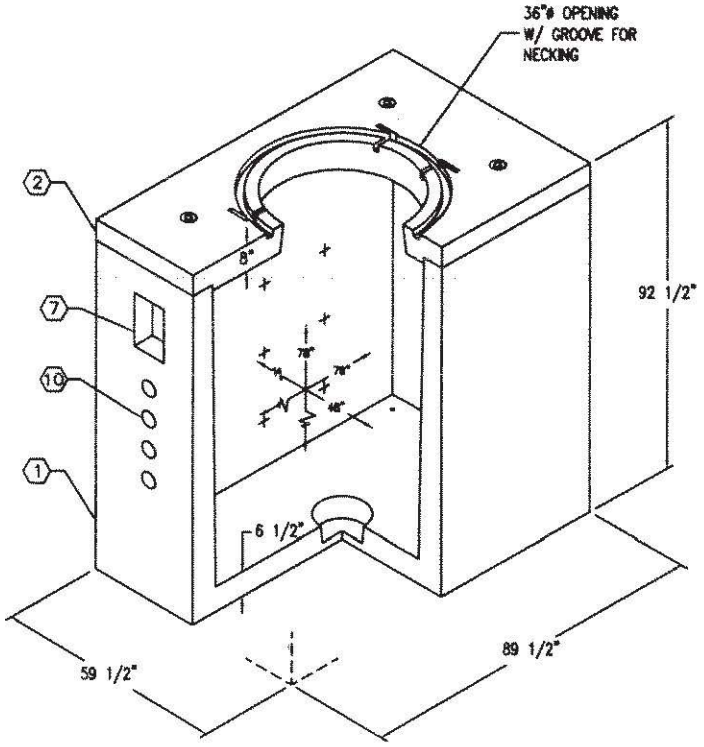

MINIMUM EXCAVATION SIZE:
6'–0" x 8'–6" x DEPTH REQ'D.

Hawaiian Telcom

AUTOCAD 2005

K466–FM78–33

PER HAWAIIAN TELCOM SPEC'S. 11–14–06

4'-0" x 6'-6" x 6'-6" HAWAIIAN TELCOM MANHOLE

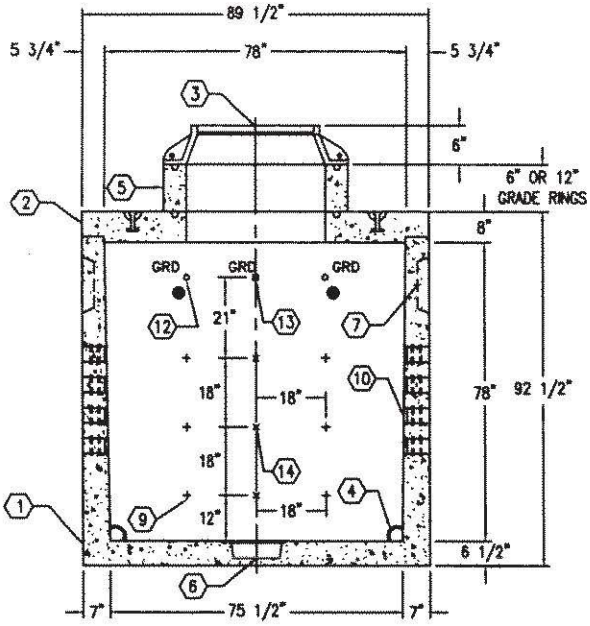

SECTION A-A/C-C

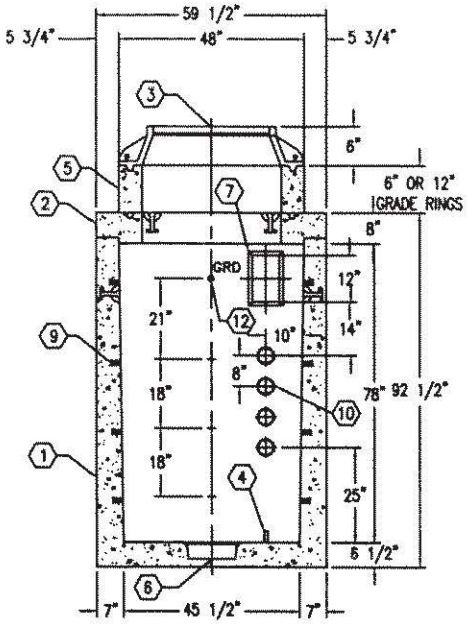

SECTION B-B

(SECTION D-D OPPOSITE HAND)

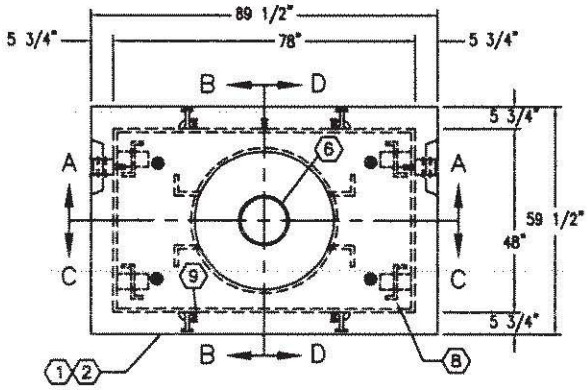

PLAN VIEW

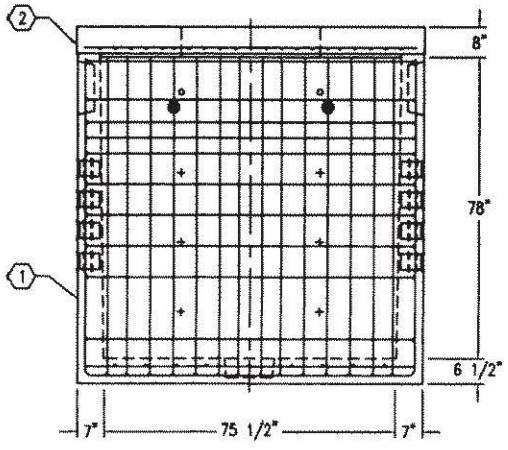

TYPICAL SIDE REINFORCING

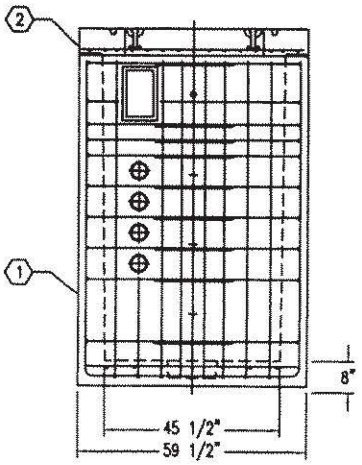

TYPICAL END REINFORCING

#	DATE	DESCRIPTION	BY

K466-FM78-33

PER HAWAIIAN TELCOM SPEC'S.

11-14-06

4'–0" x 6'–6" x 6'–6" HAWAIIAN TELCOM MANHOLE – CABLE RACKING

RACKING MATERIAL			
ITEM	DESCRIPTION	PART No.	QUAN..
1	GALV. CABLE RACK "S" SUPPORT	18-20-21	8
2	47 HOLE GALV. CABLE RACK	18-10-47	6
3	1/2" x 1 1/2" S.S. HEX HD BOLT	20-10-414	8
4	1/2" S.S. NUT	20-20-43	8
5	1/2" x 2 1/4" S.S. HEX HD BOLT	20-10-422	24
6	1/2" S.S. FLAT WASHER	20-25-42	24
7	BONDING RIBBON	18-30-10	9 LF
8	1/4" FARGO GROUND CLAMP W/ BRNZ BOLT	18-30-20	1
9	LEAD BONDING RIBBON CLIP	18-30-21	3
10	1/4" x 1" S.S. BOLT	20-10-202	3

NOTES:

- THIS DRAWING IS FOR RACKING LOCATION ONLY.
- PER HAWAIIAN TELCOM SPEC.
- SEE K612–FM84–33 SPEC. DRAWING FOR PRODUCT DETAILS.

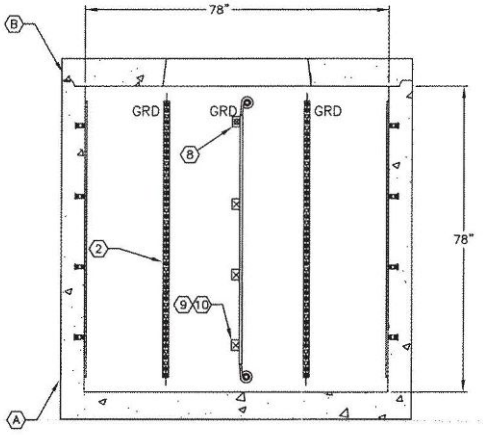

SECTION A–A

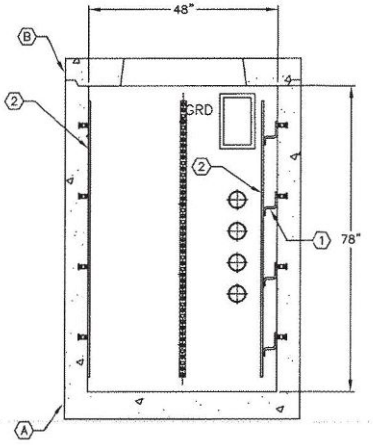

SECTION B–B

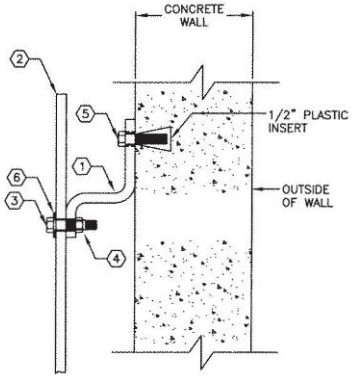

RACK MOUNTED ON "S" SUPPORT

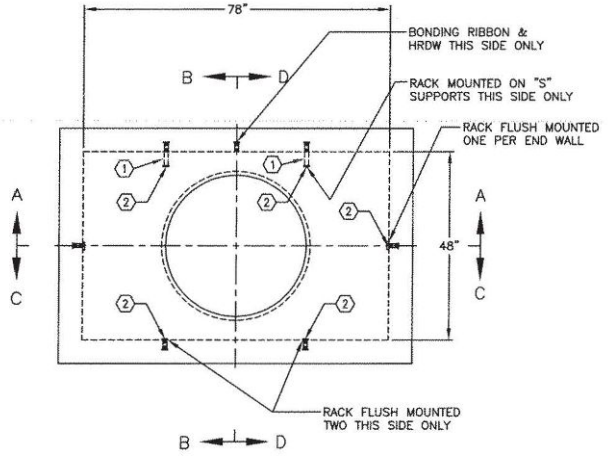

PLAN VIEW

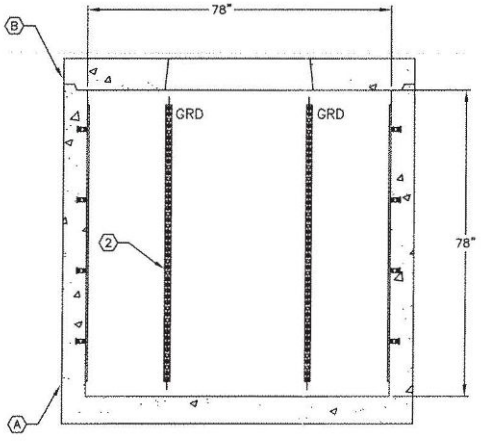

SECTION C–C

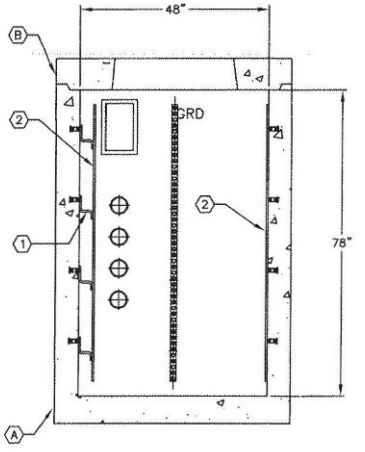

SECTION D–D

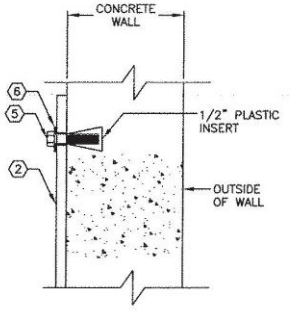

FLUSH MOUNTED RACK

Hawaiian Telcom

AutoCAD 2005

#	DATE	DESCRIPTION	BY

CR–466FM78–33

PER HAWAIIAN TELCOM SPEC. 11-14-06

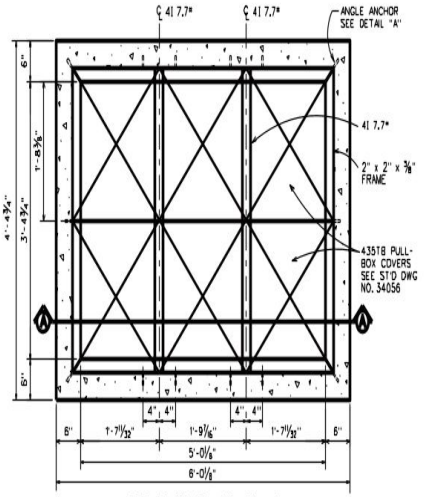

TOP PLAN (Cast-in-Place)

SCALE: 1" = 1'-0"

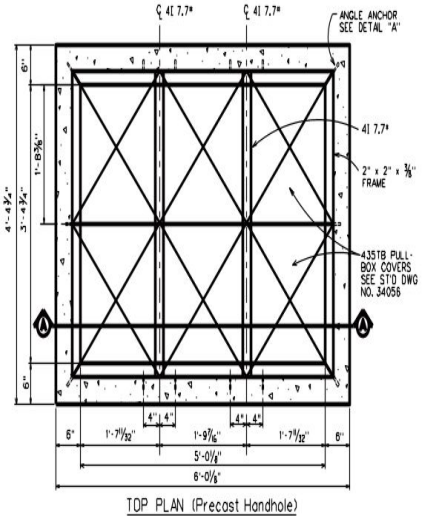

TOP PLAN (Precast Handhole)

SCALE: 1" = 1'-0"

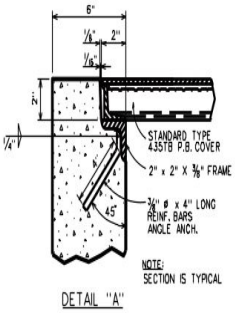

NOTE: SECTION IS TYPICAL

DETAIL "A"

SCALE: 3" = 1'-0"

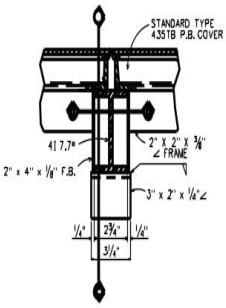

DETAIL "B"

SCALE: 3" = 1'-0"

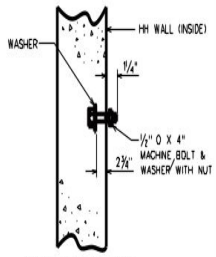

CABLE RACK STUD BOLT DETAIL

NOT TO SCALE

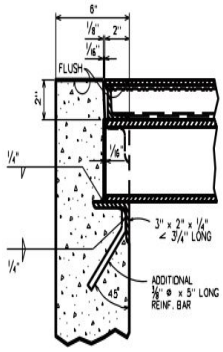

SECTION "C-C"

SCALE: 3" = 1'-0"

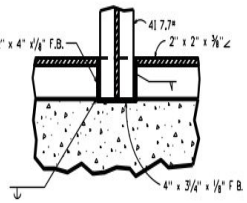

SECTION "D-D"

SCALE: 3" = 1'-0"

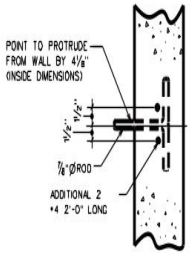

SECTIONAL ELEV. OF PULL-IN IRON

NOT TO SCALE

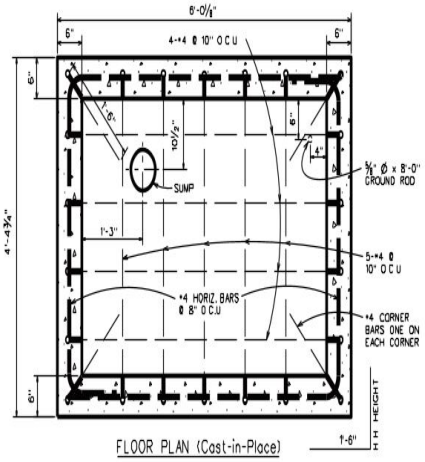

FLOOR PLAN (Cast-in-Place)

SCALE: 1" = 1'-0"

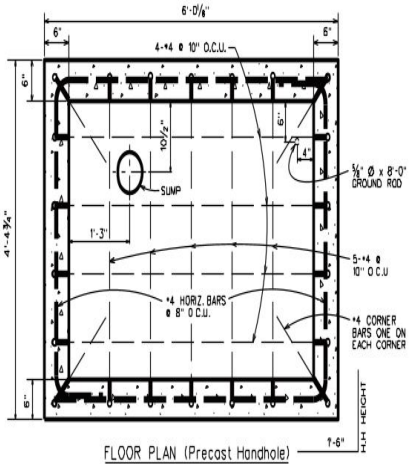

FLOOR PLAN (Precast Handhole)

SCALE: 1" = 1'-0"

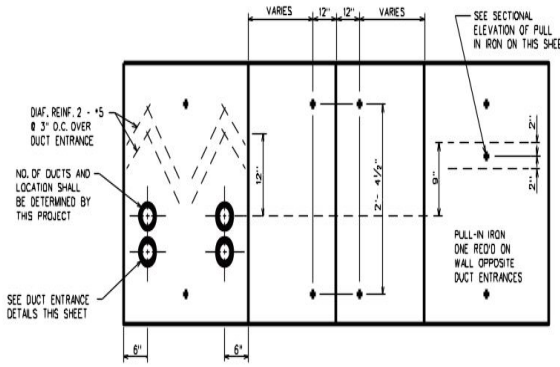

ELEVATION OF INSIDE WALLS - HH TYPE 1

NOT TO SCALE

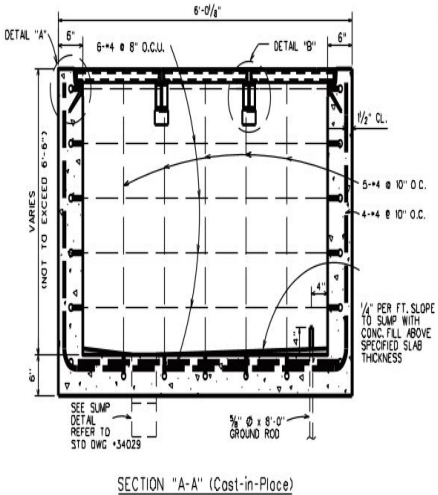

SECTION "A-A" (Cast-in-Place)

HANDHOLE TYPE#1

(3'-4 3/4" x 5'-0 1/8" INSIDE)

SCALE: 1" = 1'-0"

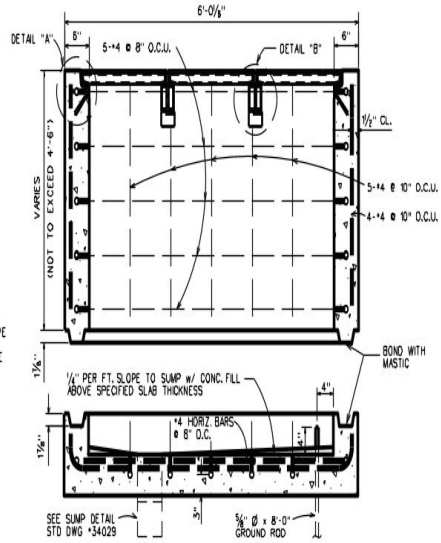

SECTION "B-B" (Precast Handhole)

HANDHOLE TYPE#1

(3'-4 3/4" x 5'-0 1/8" INSIDE)

SCALE: 1" = 1'-0"

GENERAL NOTES

1. CONCRETE FINISH - FLOORS-WOOD FLOATED FINISH-EXPOSED WALL SURFACES AND EDGES SMOOTH AND FREE FROM DEFECTS.
2. DESIGN DATA: fs - 20,000 psi & fy - 40,000 psi (ASTM A615, Gr.40), F'c - 3000 ps, fc - 1350 psi, LIVE LOAD - 250 psf, EQ. SOIL PRESSURE - 60 psf
3. CONC. TO DEVELOP COMPRESSIVE STRENGTH-3000 P.S.I IN 28 DAYS.
4. STEEL WORK ALL STRUCTURAL STEEL SHALL BE HOT DIP GALVANIZED AFTER FABRICATION.
5. FOR DUCT LINE CONSTRUCTION STANDARDS, SEE STD. DWG NO.34028.
6. THESE HANDHOLES ARE DESIGNED FOR INSTALLATION IN AREAS OTHER THAN ROADWAYS.
7. MAX LOADING FOR HANDHOLE W/435TB CHECKERED STEEL PLATE COVERS IS 4,300 LBS.
   SECTION "B-B" IS A 2 SECTION PRECASTED HANDHOLE WHICH MAY BE USED IN PLACE OF SECTION "A-A" (TYPE #1 HANDHOLES) THE TWO SECTIONS SHALL BE BONDED WITH A MASTIC WHEN INSTALLED TO PREVENT WATER ENTRY.

REVISIONS (DRAWING HISTORY)

REV#	DATE	BY	DESCRIPTION
1.	7/1986	T.T.	REVISED NOTES, COVERS, GROUND RODS
2.	7/1987	T.T.	REDRAWN & CORRECTED DIMENSIONS
3	10/1987	T.T.	REVISED NOMENCLATURE & SIZES OF STUD BOLTS AND 435TB COVERS
4.	12/1988	T.T.	REDRAWN QUALITY CONTROL
5	1/1991	D.Y	CORRECTED DRAWING
6.	10/1991	D.Y	REDRAWN, QUALITY CONTROL OBSOLETE TYPE #2 MANHOLE. ADDED PRECASTED HANDHOLE TYPE#1 (SECTION "B-B")
7.	11/1993	F.C.	REVISED GROUND ROD DIAMETER ADDED RACKING AND SPLAYED DUCTS
8	5/1994	C.Y	REVISED STANDARD COVER TO 1/4" SLIP NOT! STEEL PLATE COVER
9	1/1997	C.C	REDRAWN & CORRECTED DIMENSIONS
10.	7/1998	J.C	DRAWING REDONE & REORGANIZED IN MICROSTATION, REVISED FOR CLARITY.

DRW J.C. (REVISED 7/1998) ENG. C. CHOY

CHK _____ TEL. 840-5822

INDEX _____ APP'D _____

STANDARD HANDHOLE TYPE 1 USING 435TB PULLBOX COVERS

HAWAIIAN TELCOM, INC.

DATE _____ SHEET ___ OF ___

34029

C

MAINTENANCE HOLE
5’ X 10’-6” X 6’-6”

Item ID:	Part #:
180016	HTC 5 x 10.5 x 6.5
180017	HTC 5 x 10.5 x 6.5-1

5'–0" x 10'–6" x 6'–6" HAWAIIAN TELCOM MANHOLE

NOTES:

- MANHOLE DESIGNED IN ACCORDANCE WITH AASHTO H–20 LRFD TRAFFIC BRIDGE LOADING USING 5,500 PSI COMPRESSIVE STRENGTH CONCRETE AND 60,000 PSI YIELD STRENGTH ASTM A–615 OR A–706 STEEL REINFORCEMENT PER CALCS. No. 5106–301–33
- LIMIT OF COVER OVER ROOF SECTION IS 1'–6" TO 5'–0". WATER TABLE BASED ON THREE FEET.
- MANHOLE TO BE PLACED ON A MIN. 6" BASE OF CRUSHER RUN FOR EASE OF INSTALLATION AND EVEN LOAD DISTRIBUTION.
- INTERIOR CONCRETE BUG HOLES TO BE HAND SACKED PRIOR TO BEING PAINTED.
- ALL WALLS AND CEILINGS SHALL BE PAINTED WHITE.
- PRODUCT TO BE STENCILED: (INSIDE AND OUTSIDE)

  MANUFACTURER
  DATE OF POUR
  PRODUCT PART NO.
  WEIGHT

1. UV5106–B37–33, 37" BOTTOM SECTION. WT. 13,800 lbs.
2. UV5106–T41–33, 41" TOP SECTION. WT. 13,800 lbs.
3. 12" x 13" DIA. SUMP x 5" DEEP. BOTTOM SECTION (1) CORE MTD.
4. 4" DIA. GRAY TERMS (SCH. 40), LOCATE AS FOLLOWS: BOTTOM SECTION (8) SHELL MTD.; TOP SECTION (8) SHELL MTD.
5. 7" x 12" K.O. x 4 1/2" DEEP. DRAFT 1" ALL SIDES. TOP SECTION (4) SHELL MTD.
6. 7/8" DIA. x 6" S.S. PULL IRON. BOTTOM SECTION (8) CORE MTD.
7. 1/2" PLASTIC RACKING INSERT. BOTTOM SECTION (8) CORE MTD. TOP SECTION (8) CORE MTD.
8. 1/2" THR'D. BRONZE INSERT BRAZED TO STRUCTURAL STEEL. "GRD" SHALL BE STENCILED IN RED LETTERS ON THE CONCRETE ABOVE INSERT. BOTTOM SECTION (8) CORE MTD.; TOP SECTION (8) CORE MTD.
9. 1/4" THR'D. BRONZE INSERT W/TAIL BRAZED TO STRUCTURAL STEEL. "GRD" SHALL BE STENCILED IN RED LETTER ON THE CONCRETE ABOVE EACH INSERT. BOTTOM SECTION (4) CORE MTD.; TOP SECTION (4) CORE MTD.
10. 1/4" P–15–T INSERT. BOTTOM SECTION (4) CORE MTD.; TOP SECTION (4) CORE MTD.
14. 1/2" DIA. PLASTIC INSERTS FOR J HOOKS. TOP SECTION (4) CORE MTD.

THE FOLLOWING MATERIAL TO BE SHIPPED WITH THE MANHOLE

a) 7/8" x 1 3/4" GASKET (45 FT. REQ'D.)
b) A–3383 GALVANIZED LADDER STEPS (2 REQ'D.)
c) A–3600 GALVANIZED LADDER 8' (1 REQ'D.)
d) FOR RACKING PACKAGE SEE DRAWING No. CR–5106FM78–33

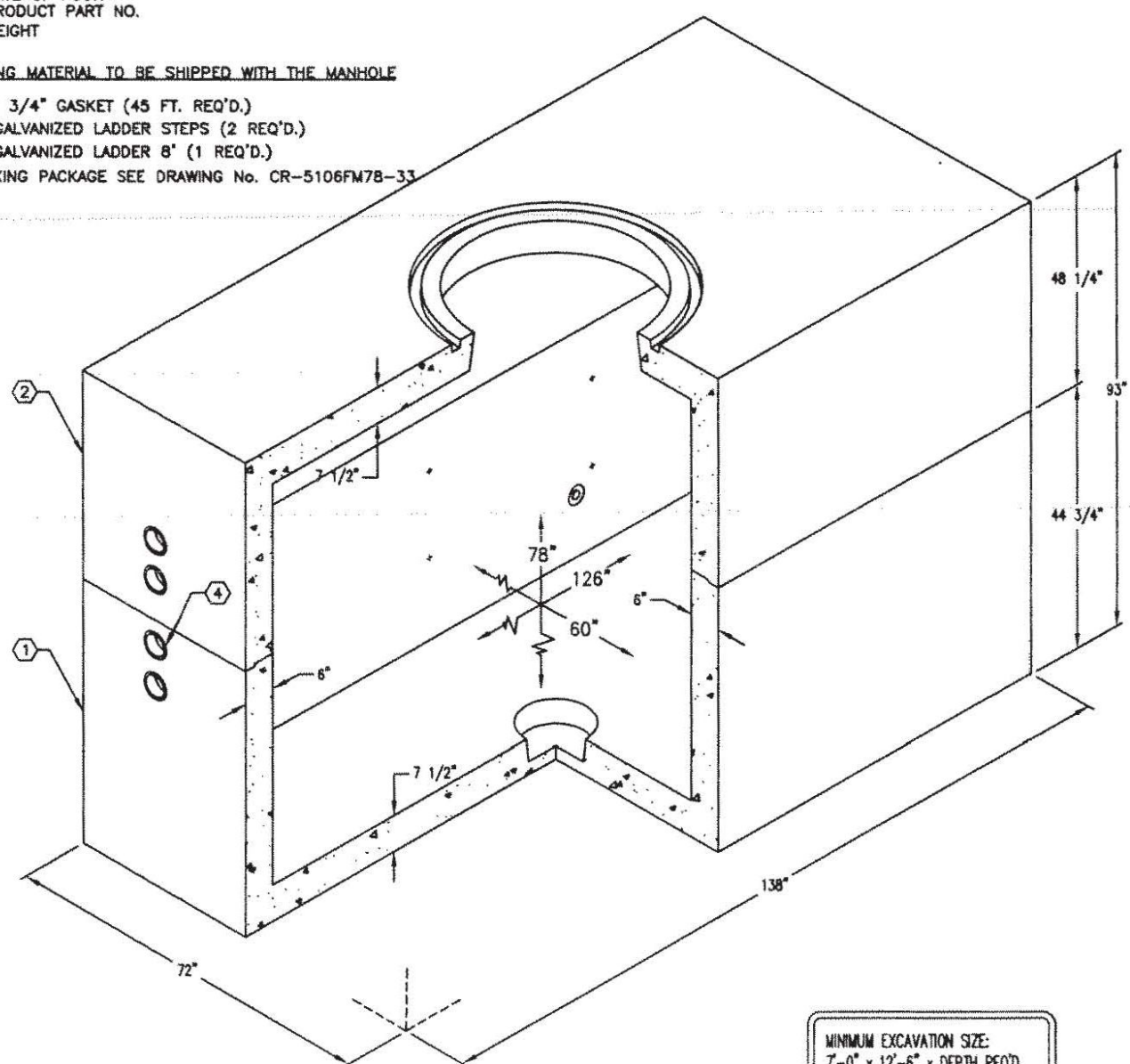

MINIMUM EXCAVATION SIZE:
7'–0" x 12'–6" x DEPTH REQ'D.

Hawaiian Telcom

AUTOCAD 2005

K5106–FM78–33

PER HAWAIIAN TELCOM SPECS. 11–14–06

5'-0" x 10'-6" x 6'-6" HAWAIIAN TELCOM MANHOLE

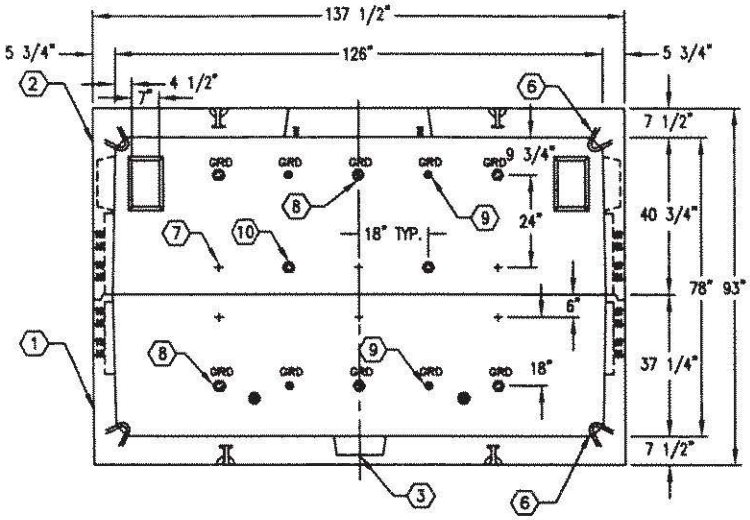

SECTION A-A/C-C

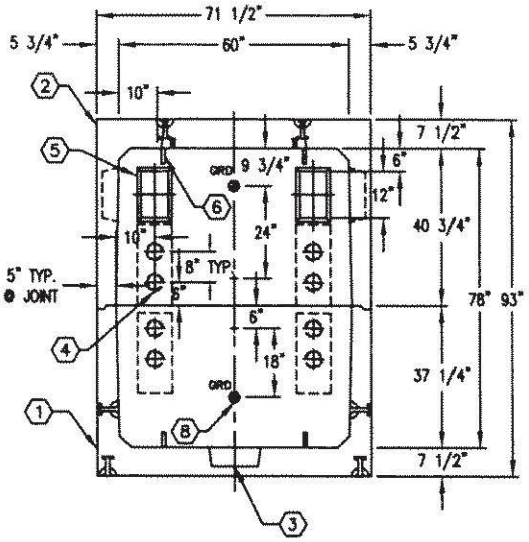

SECTION B-B/D-D

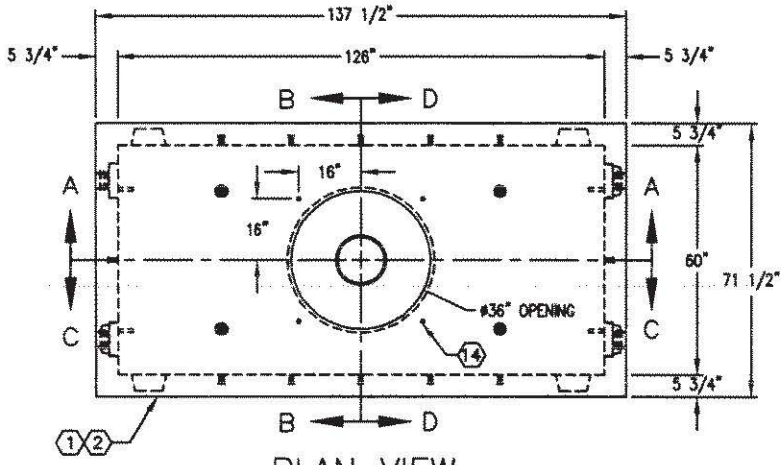

PLAN VIEW

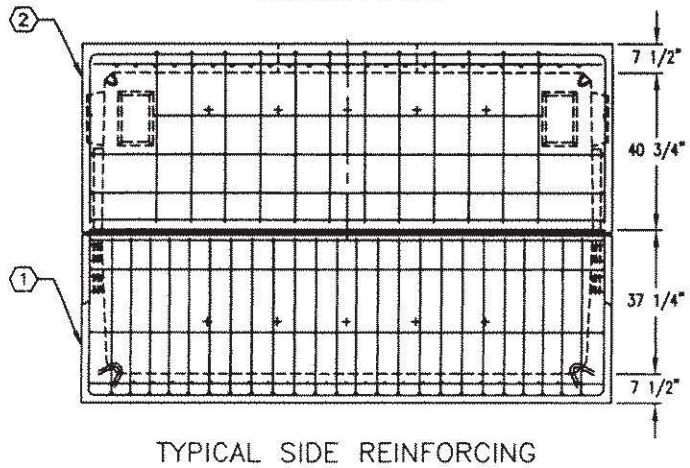

TYPICAL SIDE REINFORCING

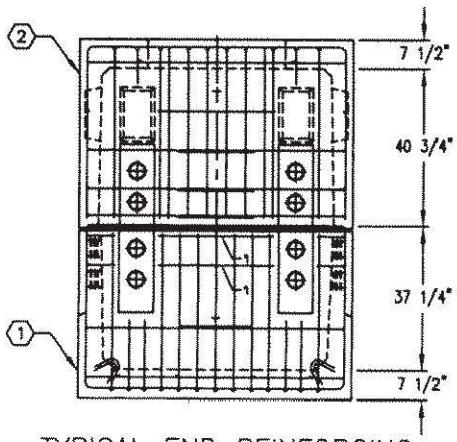

TYPICAL END REINFORCING

#	DATE	DESCRIPTION	BY

K5106-FM78-33

PER HAWAIIAN TELCOM SPECS. 11-14-06

5'–0" x 10'–6" x 6'–6" HAWAIIAN TELECOM MANHOLE –CABLE RACKING

RACKING MATERIAL			
ITEM	DESCRIPTION	PART No.	QUAN..
1	GALV. CABLE RACK "S" SUPPORT	18-20-21	24
2	24 HOLE GALV. CABLE RACK	18-10-24	8
3	1/2" x 1 1/2" S.S. HEX HD BOLT	20-10-414	24
4	1/2" S.S. NUT	20-20-43	24
5	1/2" x 2 1/4" S.S. HEX HD BOLT	20-10-422	32
6	1/2" S.S. FLAT WASHER	20-25-42	32
7	BONDING RIBBON	18-30-10	24 LF
8	1/4" FARGO GROUND CLAMP W/ BRNZ BOLT	18-30-20	8
9	LEAD BONDING RIBBON CLIP	18-30-21	8
10	1/4" x 1" S.S. BOLT	20-10-202	8
11	1/4" FARGO GROUND CLAMP RB/RB	18-30-30	4
12	22 HOLE GALV. CABLE RACK	18-10-22	8

NOTES:

- THIS DRAWING IS FOR RACKING LOCATION ONLY.
- SEE K5106FM78–33 SPEC. DRAWING FOR PRODUCT ASSEMBLY DETAILS.
- PER HAWAIIAN TELCOM SPEC.

A. UV5106–B37–33, 37" BOTTOM SECTION.

B. UV5106–T41–33, 41" TOP SECTION.

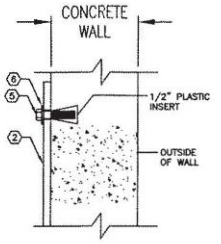

FLUSH MOUNTED RACK

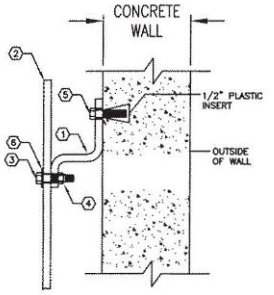

RACK MOUNTED ON "S" SUPPORT

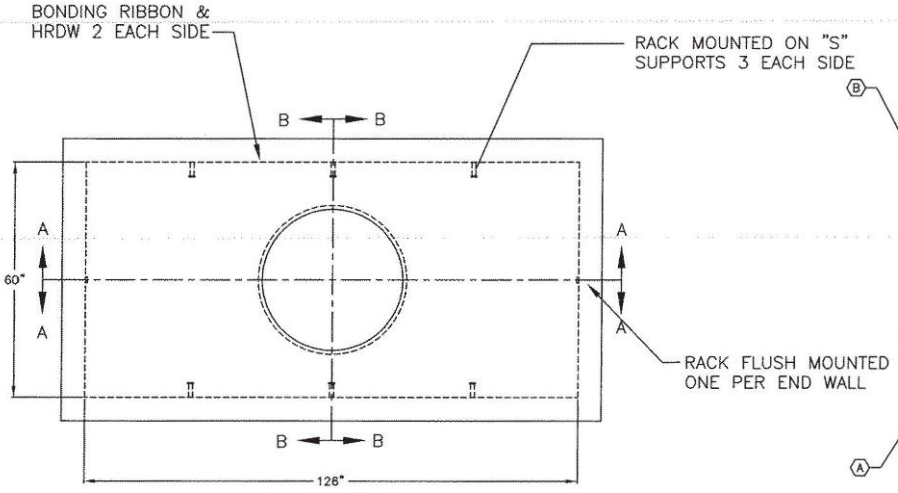

PLAN VIEW

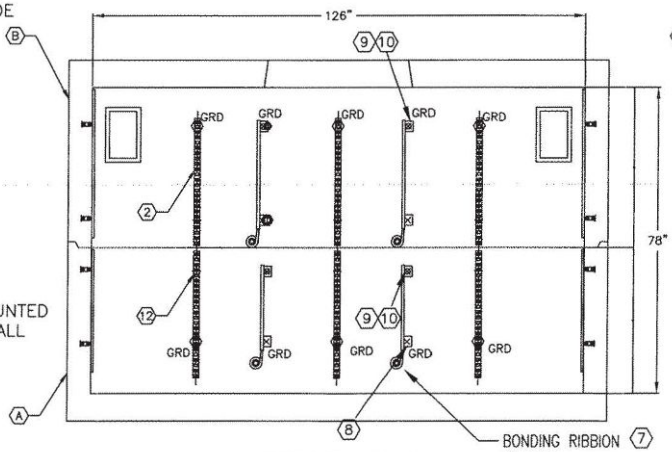

SECTION A–A

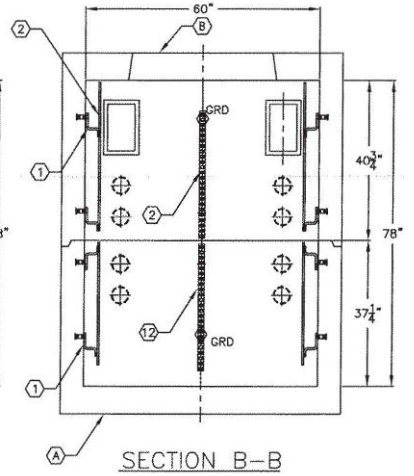

SECTION B–B

Hawaiian Telcom

#	DATE	DESCRIPTION	BY

CR–5106FM78–33

PER HAWAIIAN TELECOM SPEC. 11–14–06

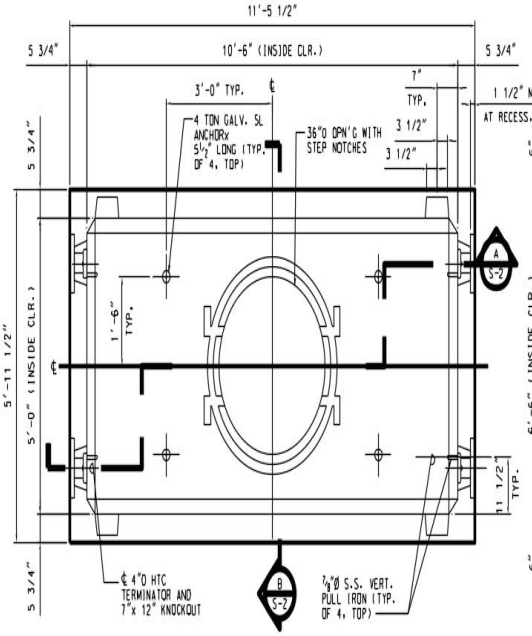

1 S-1 TOP SECTION - PLAN VIEW

SCALE: 3/4=1'-0"

NOTE:
ALL TOP ROW INSERTS WELDED TO STRUCTURAL REINF.; STENCIL "GRD" NEAR EACH GROUNDED INSERT AS INDICATED

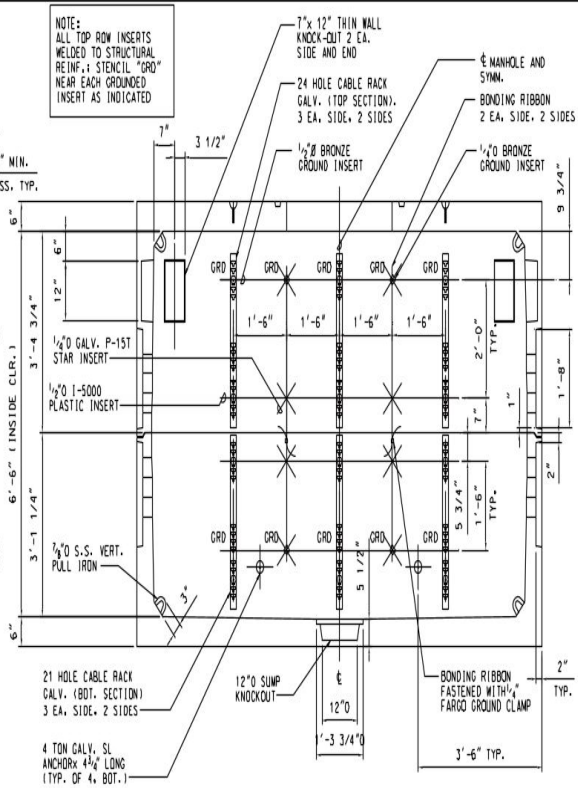

A S-1 SECTION AND SIDE WALL ELEVATION

SCALE: 3/4=1'-0"

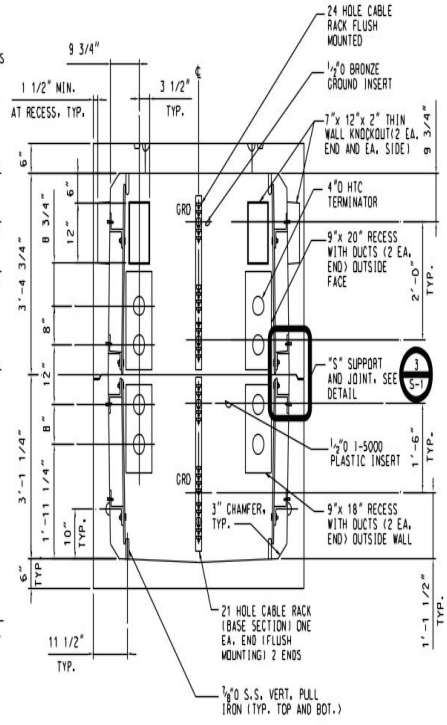

B S-1 SECTION AND END WALL - ELEVATION

SCALE: 3/4=1'-0"

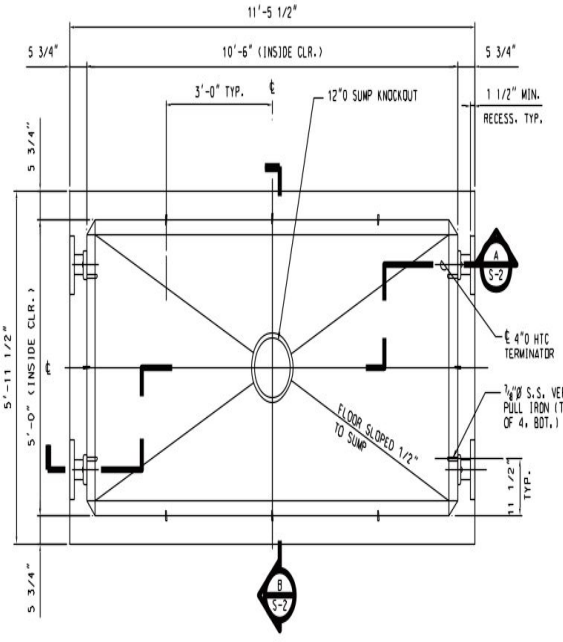

2 S-1 BASE SECTION - PLAN VIEW

SCALE: 3/4=1'-0"

KEYWAY GASKET NOTE:

1. WHEN KEYWAY JOINTS EXPOSED TO STANDING WATER, EXTERIOR LIP SHALL BE LAYERED WITH BENONITE AND INTERIOR LIP WITH RANNEK, CONSEAL OR APPROVED EQUAL.
2. TWO COATS OF THORO-SEAL SHALL BE APPLIED TO ALL EXTERIOR JOINTS.

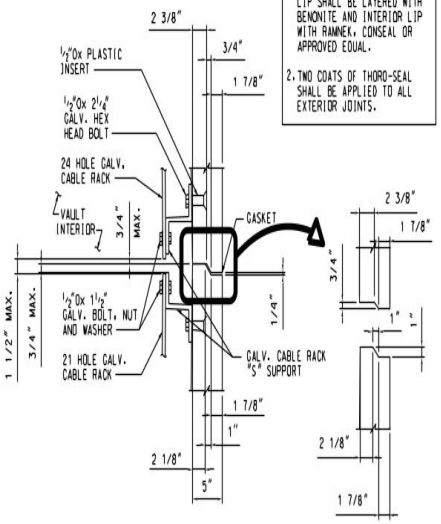

3 S-1 DETAIL

1½"=1'-0"

STRUCTURAL NOTES:

1. CONCRETE: 28 DAY COMPRESSIVE STRENGTH: f' = 5500PSI
2. REBAR: ASTM A-706 GRADE 60
3. MESH: ASTM A-185 GRADE 65 (OPTIONAL)
4. DESIGN: ACI-318-89 BUILDING CODE, AMENDED 92
   ASTM C-857 "MINIMUM STRUCTURAL DESIGN LOADING FOR UNDERGROUND PRECAST CONCRETE UTILITY STRUCTURES."
5. LOADS: AASHTO H-20-A16 WHEEL LOAD WITH 30% IMPACT
   AASHTO LIVE LOAD SURCHARGE (2' SOIL) TO 8' DEPTH
   EFFECTIVE SOIL PRESSURE BELOW WATER TABLE=80 p.c.f.
   EFFECTIVE SOIL PRESSURE ABOVE WATER TABLE=45 p.c.f.
6. SOIL COVER: 3'-0" MAX. WITH WATER TABLE 3'-0" BELOW FINISHED GRADE

GENERAL NOTES:

1. CONTRACTOR TO VERIFY ALL BLOCKOUT SIZES AND LOCATIONS, SUPPLY AND INSTALL ALL PIPING, ELECTRICAL, DIVIDER WALLS. INSTALL ALL LADDERS AND COMPLETE ALL PAINTING REQUIRED.
2. AFTER SETTING MANHOLE, BONDING RIBBONS AT JOINT MUST BE CONNECTED TOGETHER WITH BRONZE FARGO CLAMPS.
3. ALL EXTERIOR CONSTRUCTION JOINTS SHALL BE WATERPROOFED WITH TWO APPLICATIONS OF THOROSEAL OR EQUAL.
4. A SIX INCH LAYER OF COMPACTED SAND OR HAWAIIAN TELCOM TYPE "B" BACKFILL SHALL BE PLACED AS A BASE.
5. INTERIOR WALLS AND CEILING SHALL BE SMOOTH, FREE OF IRREGULARITIES AND EQUIVALENT TO A NEAT CEMENT PASTE FINISH. ALL SURFACES SHALL BE SOUND AND FREE OF ROCK POCKETS AND HONEYCOMB AREAS. SECTIONS SHALL BE FREE OF CRACKS THAT IMPAIR THE STRUCTURE OR AFFECT WATER MIGRATION.
6. INTERIOR WALLS SHALL BE PAINTED WITH A NON TOXIC WHITE LATEX PAINT.
7. NECK PORTION, INCLUDING MANHOLE FRAME AND COVER, SHALL NOT BE LESS THAN 18" DEEP NOR MORE THAN 36" DEEP WITHOUT THE APPROVAL OF THE ENGINEER.
8. PRECAST MANHOLES SHALL BE SUPPLIED BY ONLY HTC APPROVED VENDORS.

ABBREVIATIONS:

GRD	GROUND
SL	SWIFT-LIFT
S.S.	STAINLESS STEEL
Ø	DIAMETER

REVISIONS		
DESCRIPTION	DATE	ENG'R
REDRAW, QUALITY CONTROL	05/22/98	KT

TOP SECTION PER GTE SPEC #GTS-8395

WORK SAFELY HIGH VOLTAGE

JOB PRE-FIELDED BY: DATE PRE-FIELDED:

PROPRIETARY INFORMATION FOR USE BY AUTHORIZED HT EMPLOYEES ONLY

CODES:

PIPELINE NO.

CPA AFFECTED: YES NO

CABLE(S) AFFECTED:

PROGRAM CODE: PLANNING AREA:

C O

SHT(S)

ENGINEER KT TEL

DRAWN BY LO DATE 05/22/98

APPROVED DO SHT 1 OF 2

HAWAIIAN TELCOM, INC.

5'-0" X 10'-6" X 6'-6" TWO PIECE MANHOLE

34108

I:\@@SB0340D@WGS\@PLAN@TEP01.DWG 05/27/98 14:51 DY

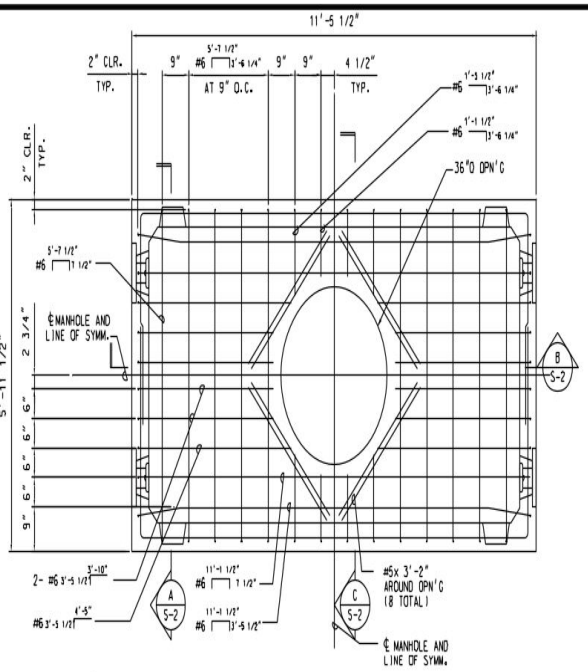

1 S-2 TOP SECTION - ROOF SLAB TOP REINFORCING PLAN
SCALE: 3/4=1'-0"

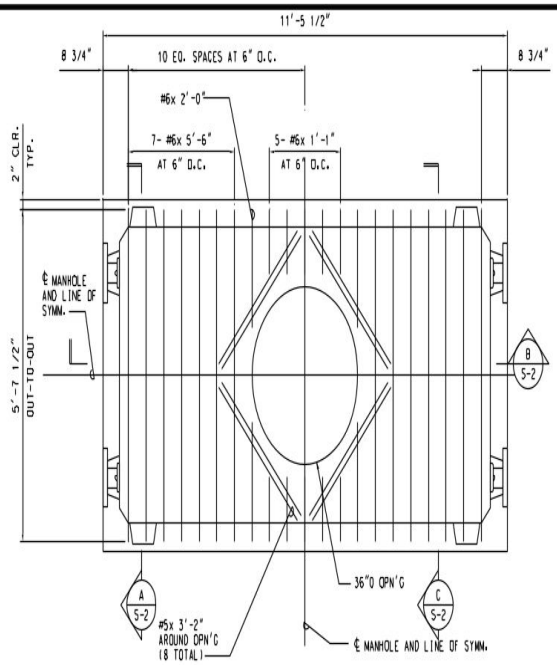

2 S-2 TOP SECTION - ROOF SLAB BOTTOM REINFORCING PLAN
SCALE: 3/4=1'-0"

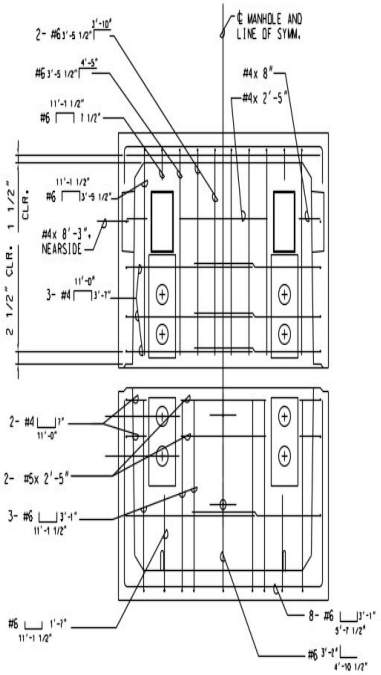

C S-2 END WALL REINFORCING ELEVATION
SCALE: 3/4=1'-0"

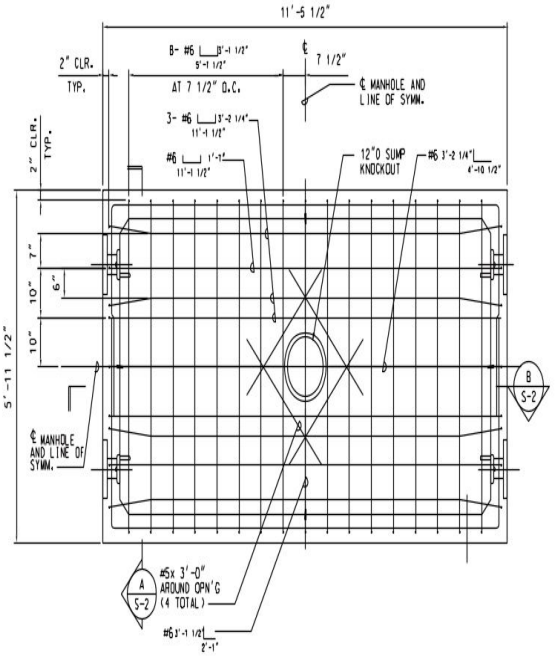

3 S-2 BASE SECTION - REFLECTED FLOOR SLAB REINFORCING PLAN
SCALE: 3/4=1'-0"

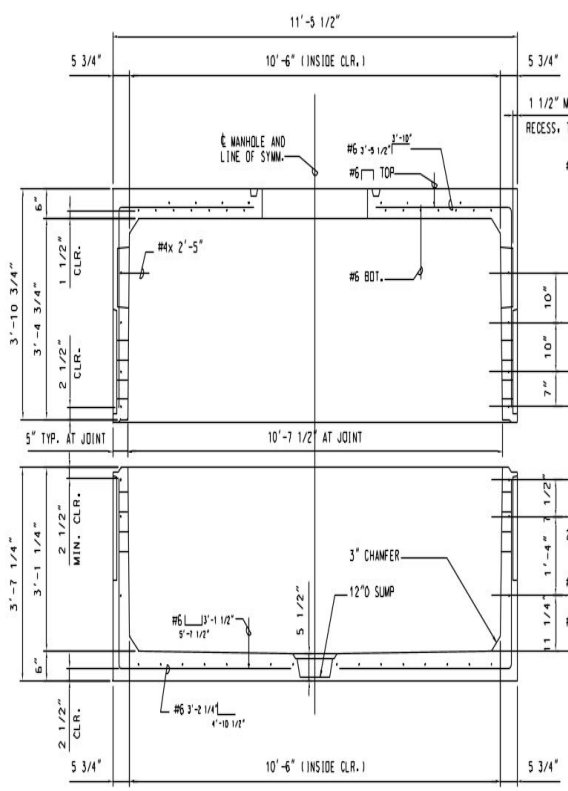

B S-2 LONGITUDINAL SECTION
SCALE: 3/4=1'-0"

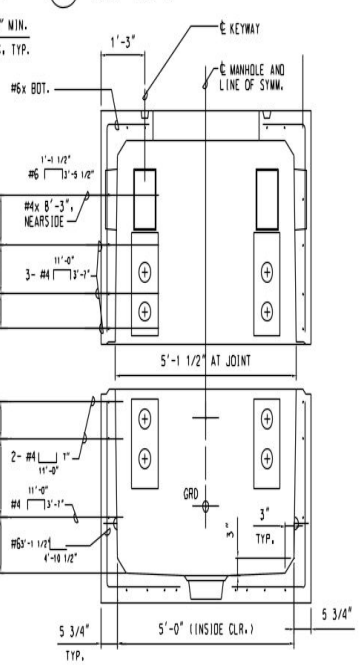

C S-2 TYPICAL TRANSVERSE SECTION
SCALE: 3/4=1'-0"

BASE SECTION PER GTE SPEC #GTS-8395

REVISIONS		JOB PRE-FIELDED BY	DATE PRE-FIELDED:	PROGRAM CODE:	PLANNING AREA
WORK SAFELY HIGH VOLTAGE		PROPRIETARY INFORMATION FOR USE BY AUTHORIZED HT EMPLOYEES ONLY		C.S.	
POWER CO. ___ BY ___ PHASE		CODES:		DATE(S):	
CONNECTED		PIPELINE NO.	ENGINEER KT TEL	5'-0" X 10'-6" X 6'-6" TWO-PIECE MANHOLE	
CHANGED		CPN AFFECTED YES NO	DRAWN BY LO DATE 05/22/98		
COMMENTS		SALES AFFECTED:	APPROVED DO SHT 2 OF 2	34108	

I:\#8\#8803400\DWGS\PLAN\GTEP02.DWG 05/27/98 14:44 DY

SECTION 4:

STANDARD MAINTENANCE HOLE COVER DETAILS

DRAWING #34086

a. Standard 10” Traffic Frame and Cover
b. Standard 5 5/8” Traffic Frame and Cover
c. Bolting System
d. Light Duty / Sidewalk Frame & Cover
e. Special Tamper Proof Bolting
f. Miscellaneous Details

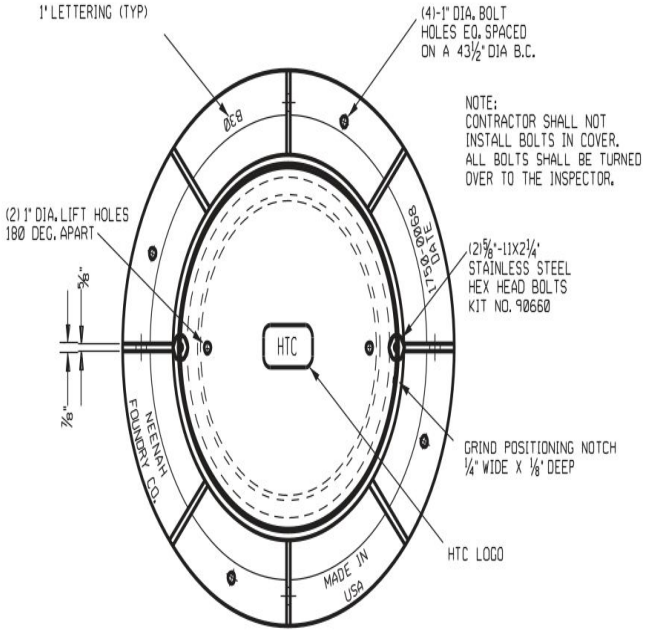

PLAN VIEW OF FRAME & COVER

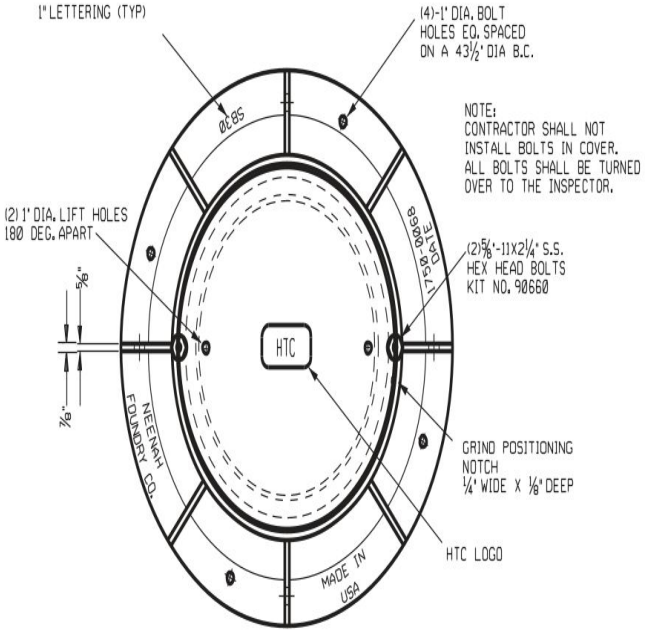

PLAN VIEW OF FRAME & COVER

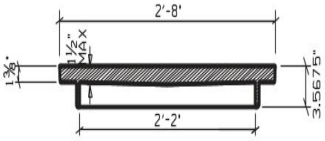

ELEVATION SECTION OF COVER

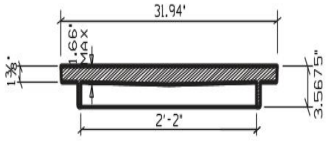

ELEVATION SECTION OF COVER

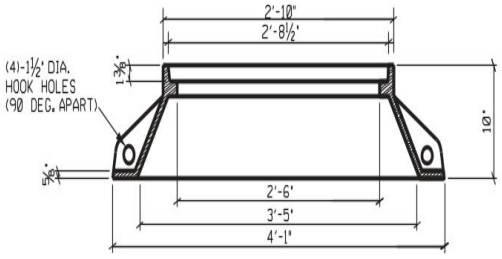

ELEVATION SECTION OF FRAME

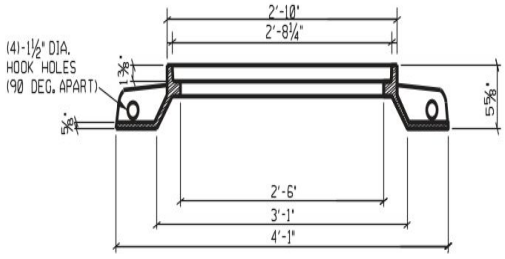

ELEVATION SECTION OF FRAME

TYPE CB-GT FRAME & COVER FOR NORMAL APPLICATIONS

MATERIAL CODE: 182058
COMPONENT NO.: FRAME; 1750-0067, LID 1750-0017
WEIGHT: FRAME; 426 LBS., LID; 266 LBS.
MATERIAL: CAST GRAY IRON ASTM A-48, CLASS 35B
FINISH: NO PAINT

TYPE C1B-GT FRAME & COVER FOR HEIGHT RESTRICTED AREAS

MATERIAL CODE: 182060
COMPONENT NO.: FRAME; 1750-0068, LID 1750-0017
WEIGHT: FRAME; 360 LBS., LID; 266 LBS.
MATERIAL: CAST GRAY IRON ASTM A-48, CLASS 35B
FINISH: NO PAINT

GENERAL NOTES:

1. ALL NEW MANHOLES SHALL USE THE FRAME AND COVERS SHOWN ON THIS STANDARD DRAWING.
2. STD DRAWING 34037 SHOWING THE TYPE B OR SB FRAME AND COVER WILL BE USED FOR SPECIAL REPLACEMENTS ONLY.
3. MANHOLE FRAME AND COVERS CAN BE OBTAINED FROM NEENAH FOUNDRY COMPANY, P.O. BOX 729, NEENAH, WISCONSIN 54957
4. ROOF SLAB OPENING DIMENSIONS:

TYPE	SLAB OPENING
CB	36"
C1B	36"

NOTE: DRAWING NOT TO SCALE

DRW J.C. REVISED 7/1999 ENG. C.CHOY CHK _____ TEL. _____ INDEX _____ APP'D _____	TYPE CB-GT & C1B-GT MANHOLE FRAME & COVER	
HAWAIIAN TELCOM, INC.	DATE _____ SHEET ___ OF ___	34086 C

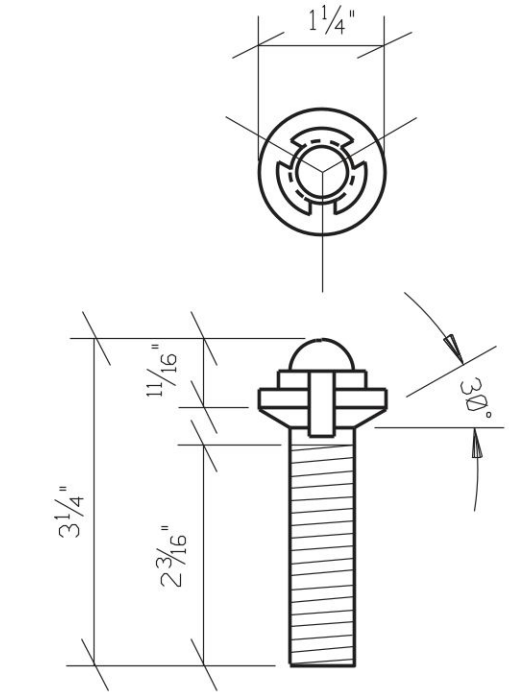

DETAIL OF SPECIAL LOCK BOLT
SCALE: ½" = 1"

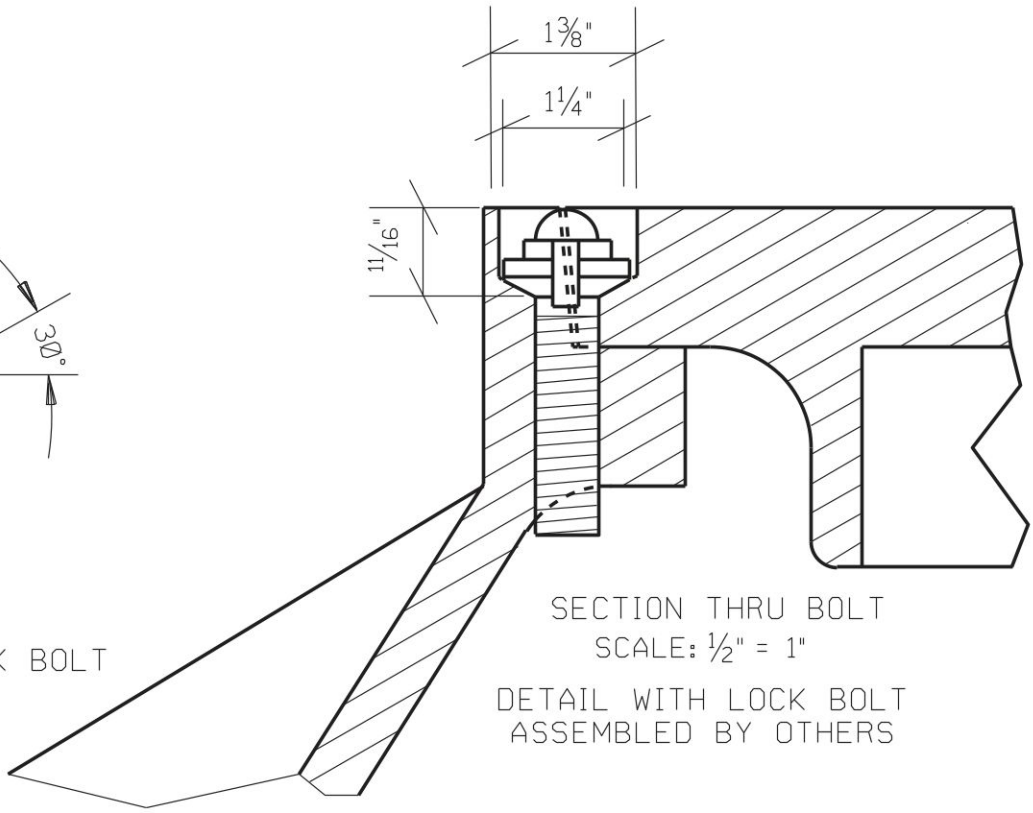

SECTION THRU BOLT
SCALE: ½" = 1"

DETAIL WITH LOCK BOLT
ASSEMBLED BY OTHERS

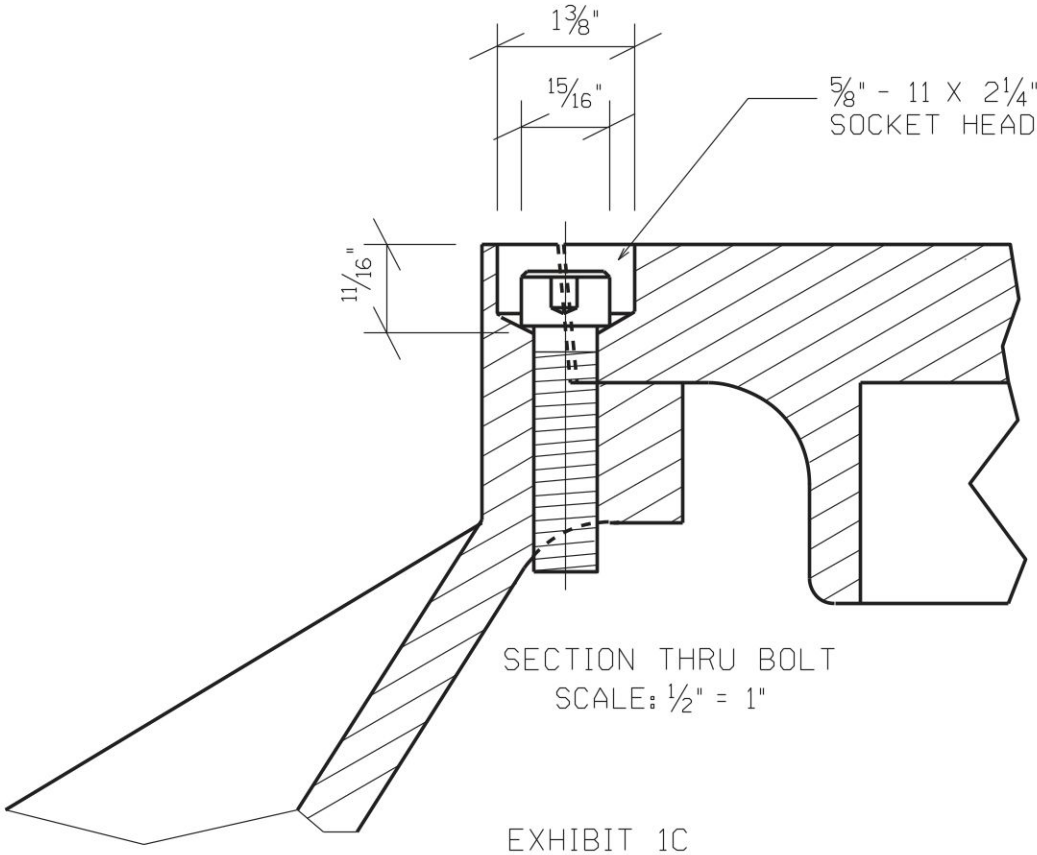

SECTION THRU BOLT
SCALE: ½" = 1"

EXHIBIT 1C
TRAFFIC FRAME LOCKING BOLT DETAIL

DRAWN BY:	TITLE:	REV. NO. BY DATE
CHECKED BY:	BOLTING SYSTEM USED IN HT LIDS	1
APPROVED BY: CALVIN CHOY		2
SCALE: ½" = 1"		3
DATE: 8-23-94		4
		5
		DGN NO. 34086-5

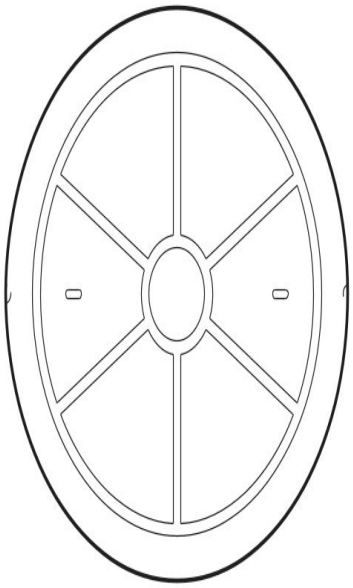

BOTTOM VIEW OF LID ONLY

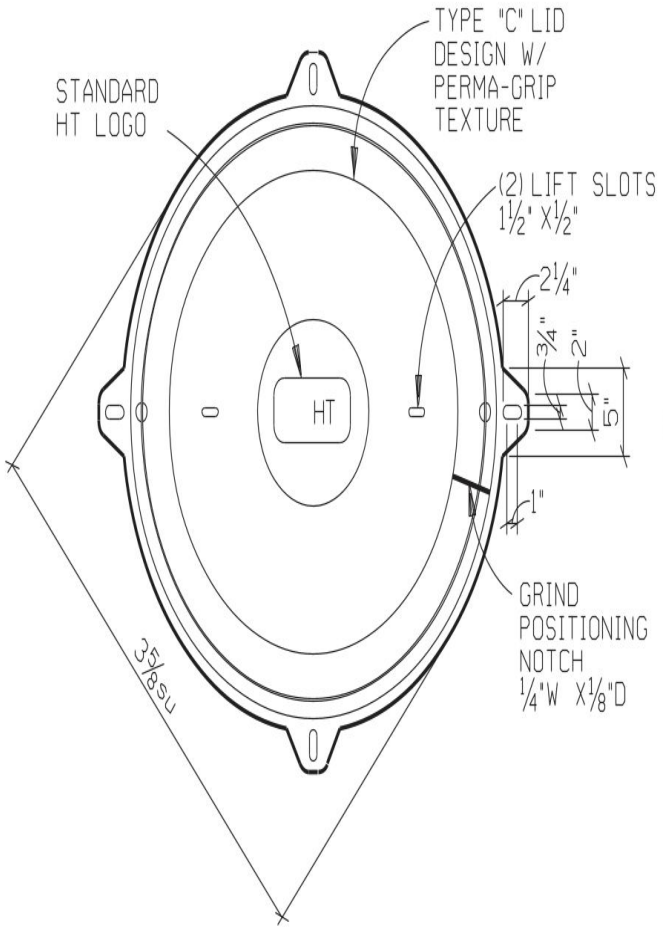

PLAN VIEW OF FRAME & COVER

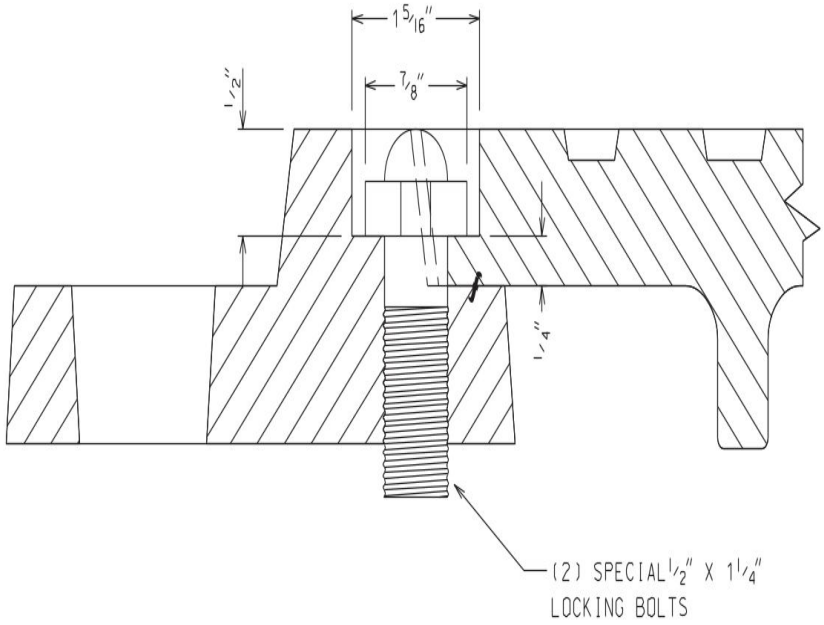

SECTION THRU BOLT

MATERIAL: CAST GRAY IRON ASTM A-48, CLASS 35B

DRAWN BY: D. NEMOTO
CHECKED BY:
APPROVED BY: CALVIN CHOY
SCALE:
DATE: 01-02-03

TITLE:

EXHIBIT 1D
LIGHT DUTY/SIDEWALK FRAME & COVER

REV. NO.	BY	DATE
1		
2		
3		
4		
5		

DGN NO. 34086-6

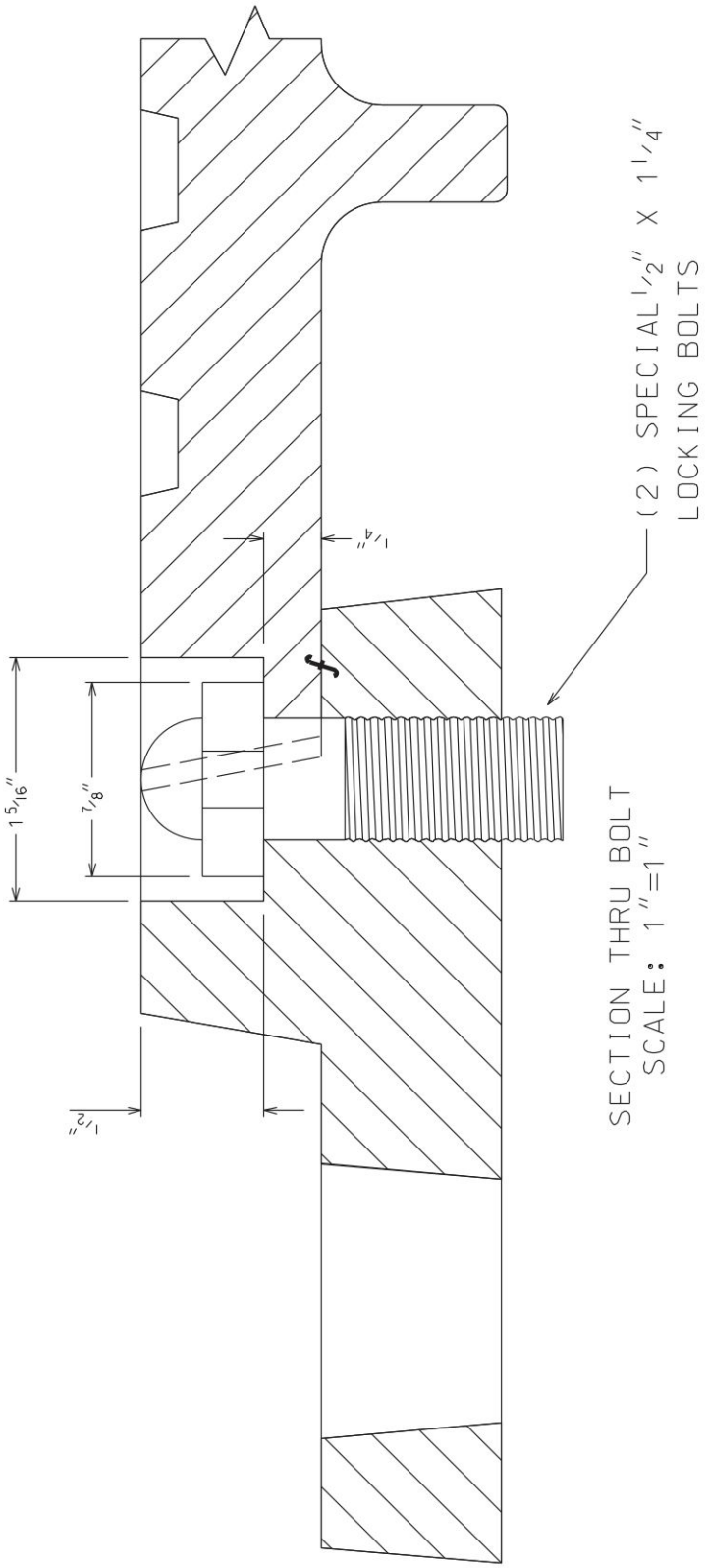

SECTION THRU BOLT
SCALE: 1"=1"

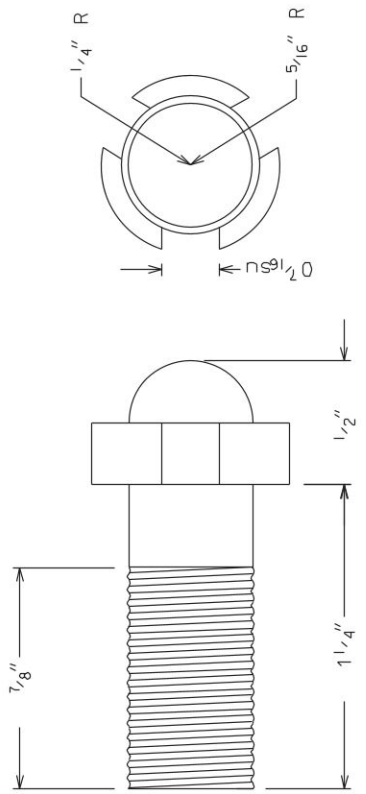

DETAIL OF SPECIAL BOLT
SCALE: 1"=1"

EXHIBIT 1E
LIGHT DUTY/SIDEWALK FRAME LOCKING BOLT DETAIL

DRAWN BY: D. NEMOTO	TITLE: SPECIAL TAMPER PROOF BOLTING FOR HT CASTINGS	REV. NO. / BY / DATE
CHECKED BY:		1
APPROVED BY: CALVIN CHOY		2
SCALE:		3
DATE: 01-02-03		4
		5
		DGN NO. 34086-6

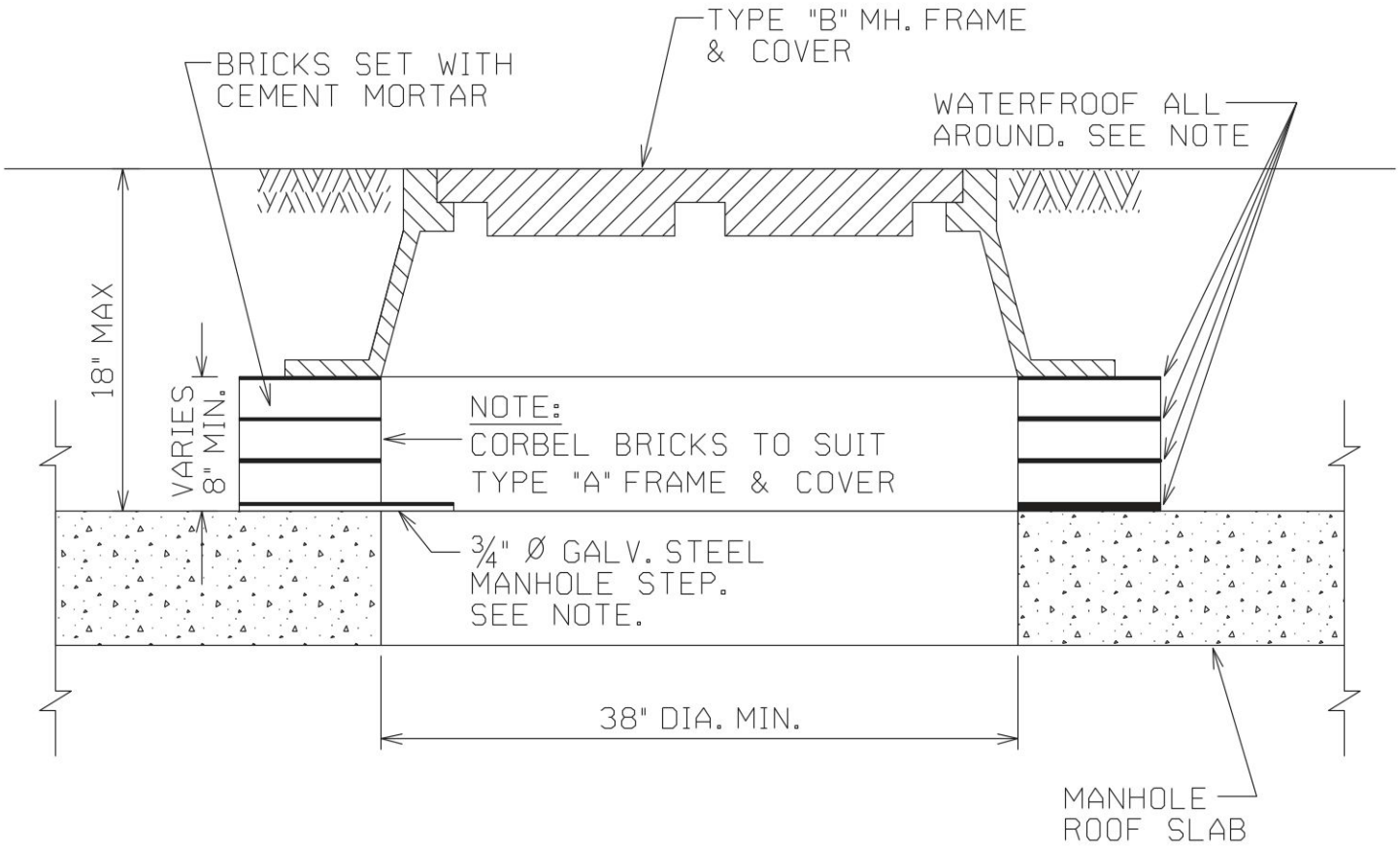

SECTION "D-D"
MH COVER DETAIL
SCALE: 1"=1'-Ø"

DRAWN BY: A.C.	TITLE: MISCELLANEOUS MANHOLE DETAILS	REV. NO. BY DATE
CHECKED BY:		1
APPROVED BY: CALVIN CHOY		2
SCALE: 1" = 1'-Ø"		3
DATE: 9-1-94		4
		5
		DGN NO. 34086-8

SECTION 5:

STANDARD MISCELLANEOUS HARDWARE DETAILS

a. Pulling-in Iron
b. Cable Rack Stud Bolts
c. Center Cable Rack Frame

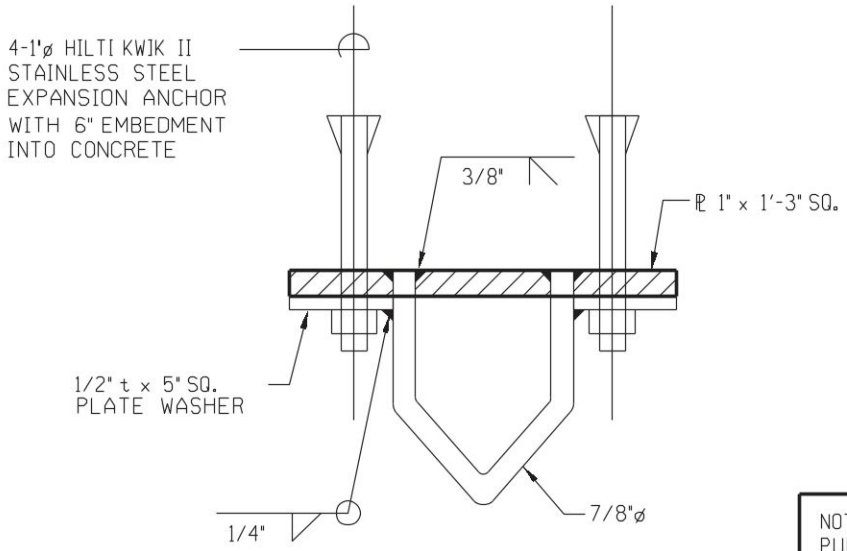

SECTION

NOTE:
PULLING IRON ASSEMBLY AND PLATE WASHERS SHALL BE HOT-DIPPED GALVANIZED AFTER FABRICATION.

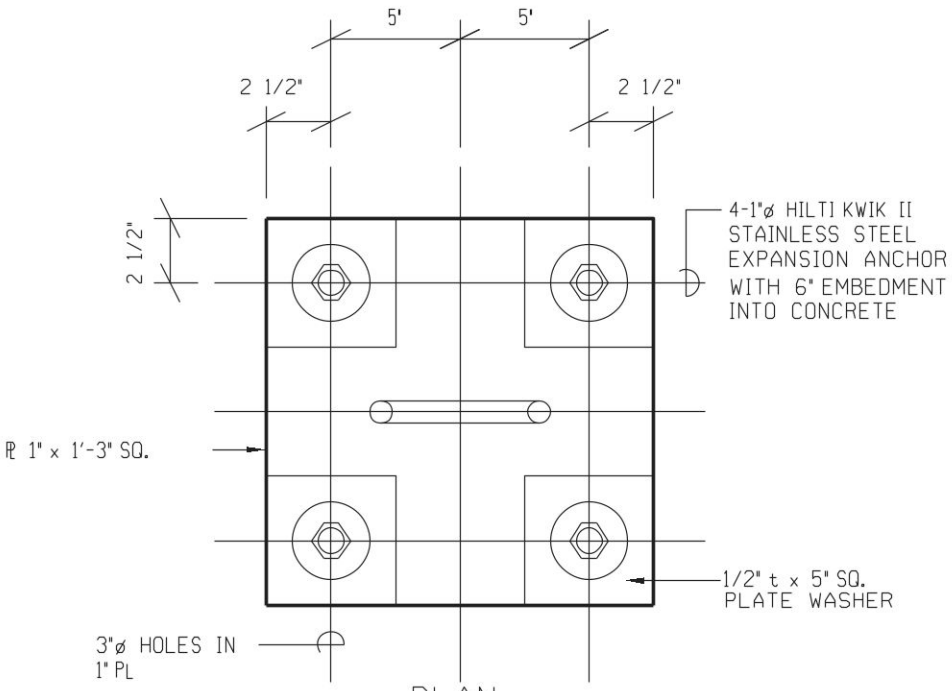

PLAN

PULLING IRON DETAIL

NOT TO SCALE

DRAWN BY: .	TITLE:	REV. NO. BY DATE
CHECKED BY:		1
APPROVED BY: CALVIN CHOY		2
SCALE:		3
DATE: 12-23-04		4
		5
		DGN NO. SEC5-1

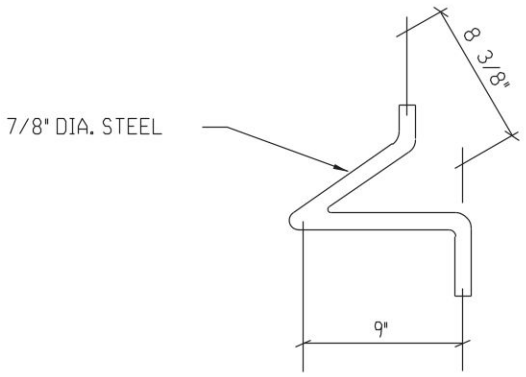

PULLING-IN IRON

NOT TO SCALE

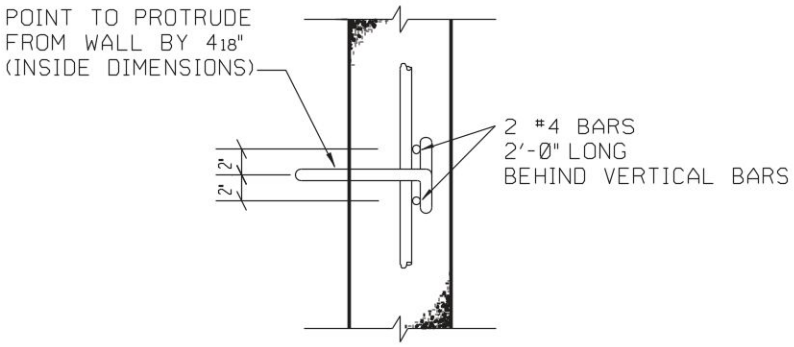

SECTIONAL VIEW OF PULLING-IN IRON

SCALE: 3/4" = 1'-0"

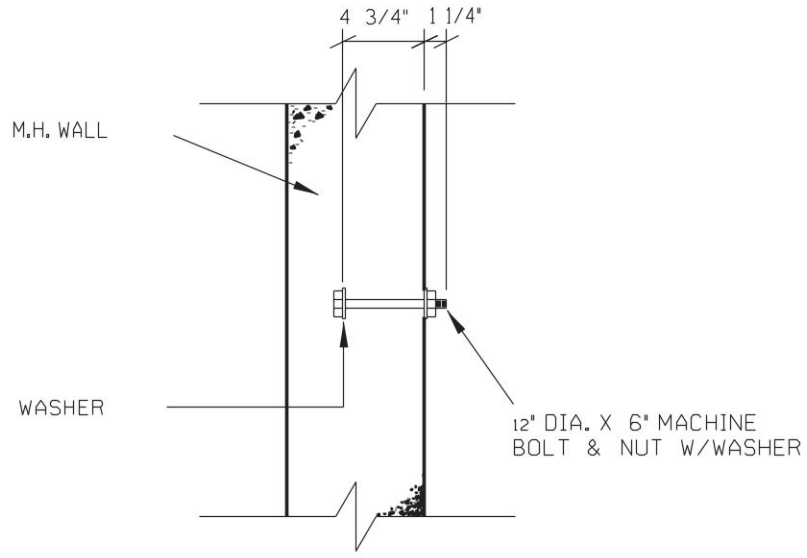

CABLE RACK STUD BOLT DETAIL

SCALE: 1" = 1'-0"

DRAWN BY: LC	TITLE:	REV. NO. / BY / DATE
CHECKED BY:		1
APPROVED BY: CALVIN CHOY		2
SCALE:		3
DATE: 8-23-94		4
		5
		DGN NO. SEC5-2

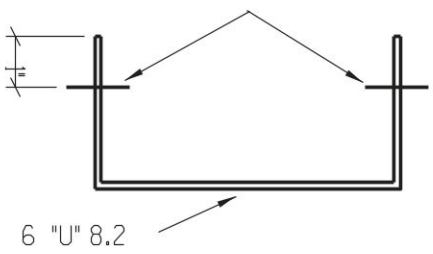

SECT. "X-X"

NOT TO SCALE

NOTE:

ALL STEEL MEMBERS ARE DOUBLE-DIPPED GALVANIZE

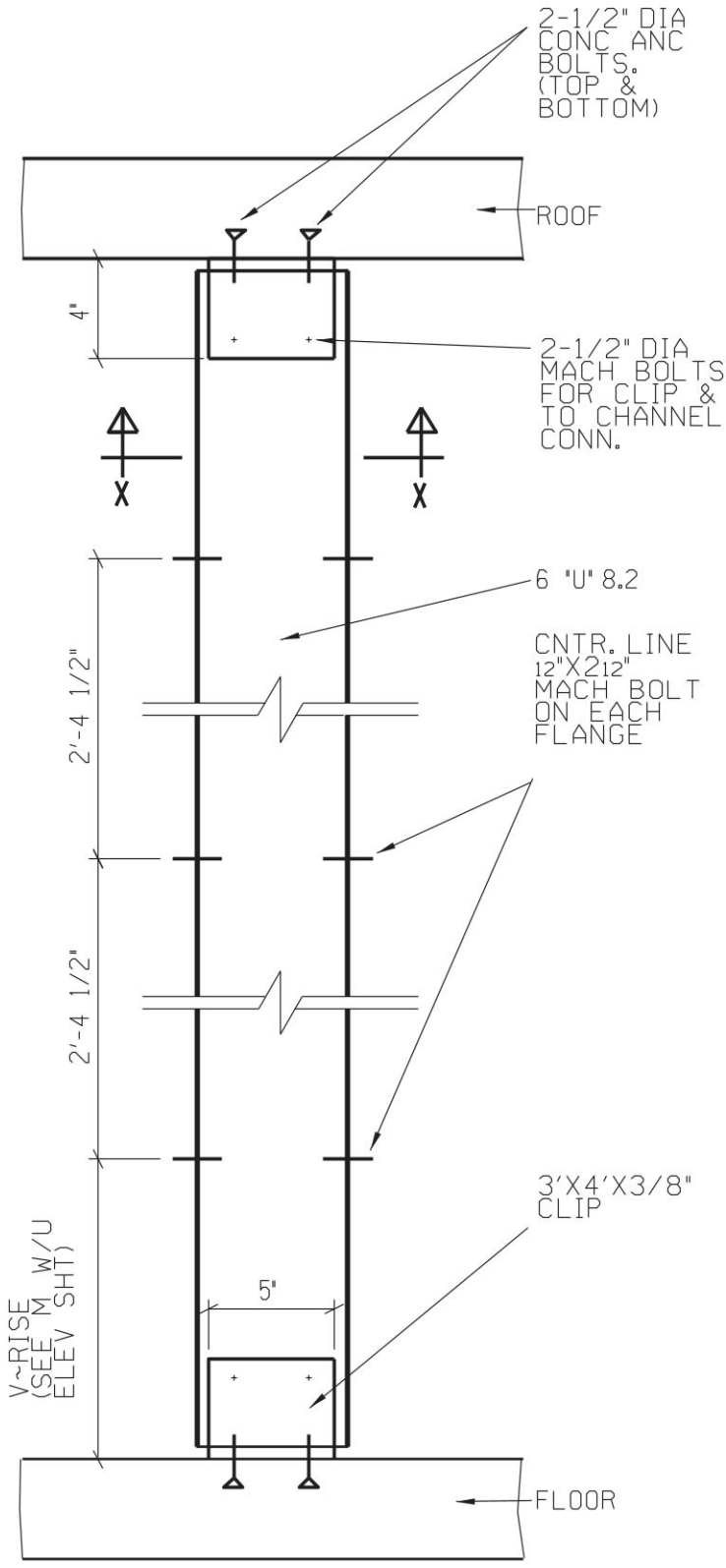

DETAIL "C"

CABLE RACK FRAME
NOT TO SCALE

DRAWN BY: LC	TITLE:	REV. NO. / BY / DATE
CHECKED BY:		1
APPROVED BY: CALVIN CHOY	CABLE RACK FRAME	2
SCALE:		3
DATE: 8-23-94		4
		5
		DGN NO. SEC5-3

SECTION 6:

STANDARD MISCELLANEOUS CONSTRUCTION DETAILS

a. Sump-Hole
b. Construction Joint
c. Expansion Joint Assemblies
d. Cored Duct Connections
e. Cable Marker Detail

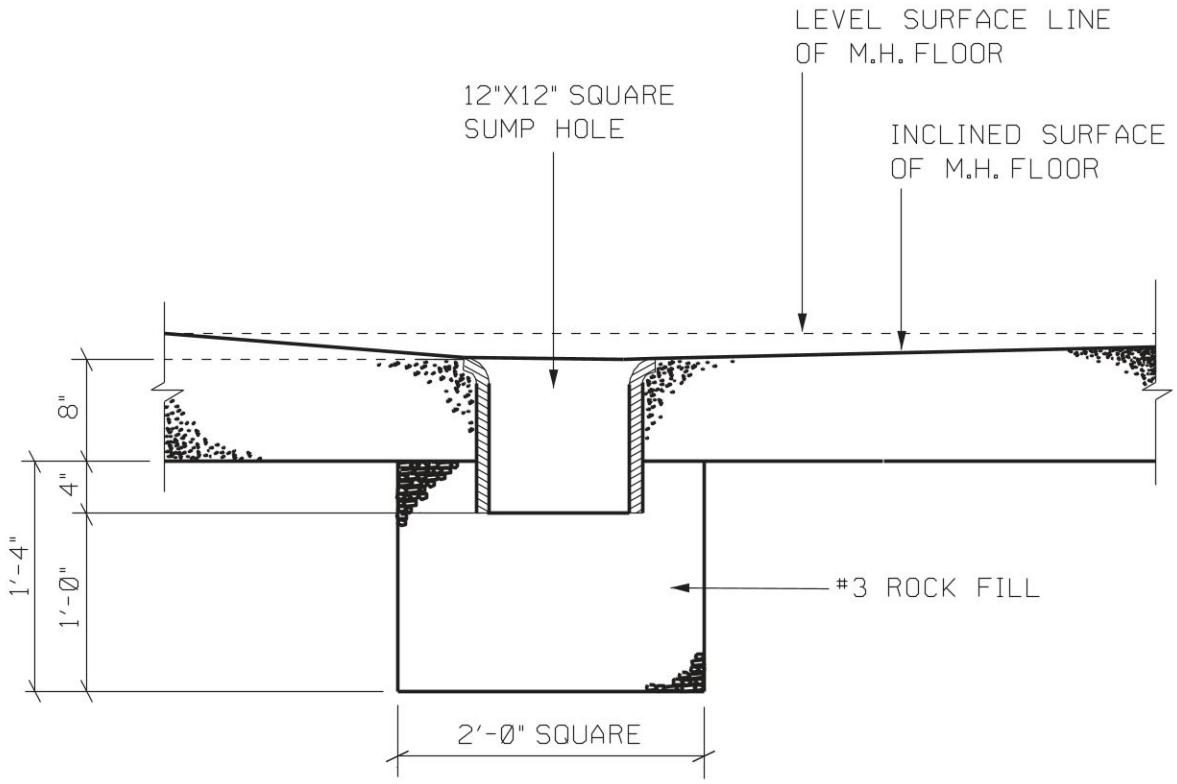

SECTION "E-E"

MANHOLE SUMP DETAIL
SCALE: 3/4"=1'-Ø"

DRAWN BY: LC	TITLE:	REV. NO. BY DATE
CHECKED BY:	SECTION "E-E" MANHOLE SUMP DETAIL FOR MANHOLES IN DRY AREAS ONLY	1 2 3 4 5
APPROVED BY: CALVIN CHOY		
SCALE: 3/4" = 1'-Ø"		
DATE: 8-23-94		DGN NO. SEC6-1

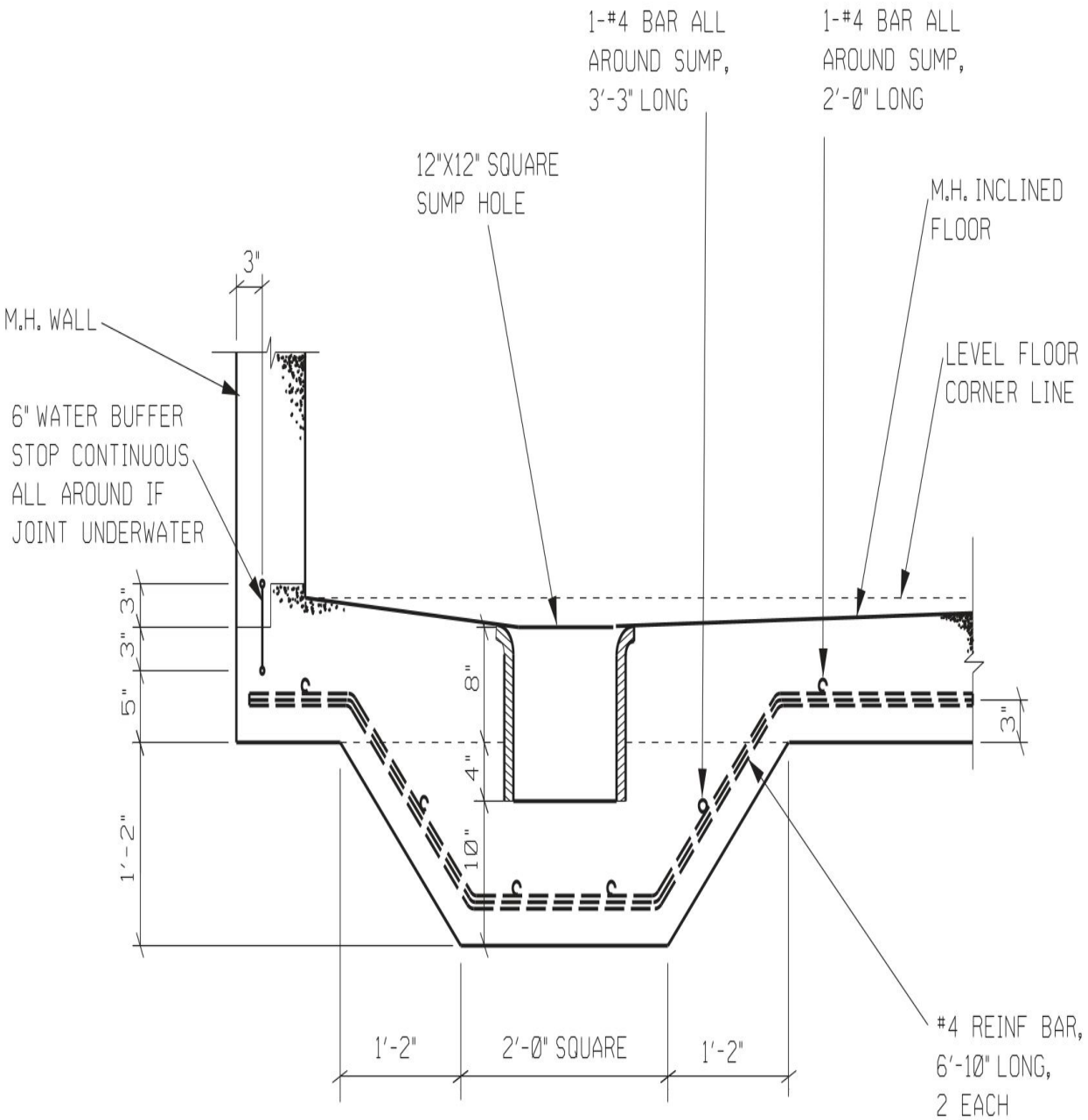

SECTION "E1-E1"

MANHOLE SUMP DETAIL
SCALE: 3/4"=1'-Ø"

NOTE:

ONLY FOR MANHOLES LOCATED BELOW WATER TABLE.

DRAWN BY: LC
CHECKED BY:
APPROVED BY: CALVIN CHOY
SCALE: 3/4" = 1'-Ø"
DATE: 8-23-94

TITLE:
SECTION "E1-E1"
MANHOLE SUMP DETAIL

REV. NO.	BY	DATE
1		
2		
3		
4		
5		

DGN NO. SEC6-2

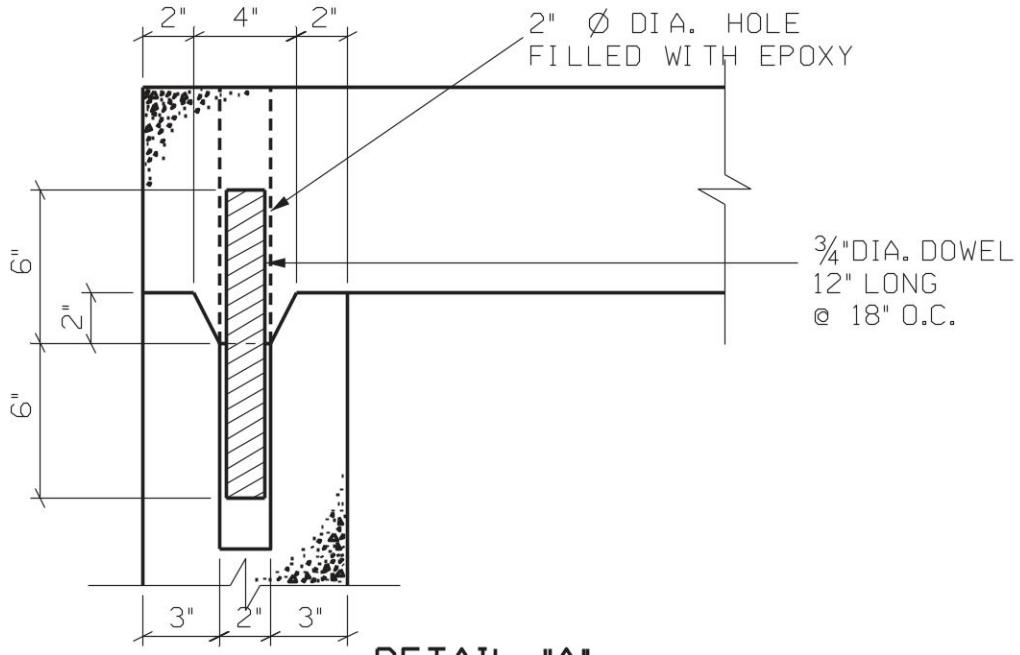

DETAIL "A"

TOP CONSTRUCTION JOINT
OPTIONAL FOR CAST-IN-PLACE CONSTRUCTION FOR PRECAST CONSTR

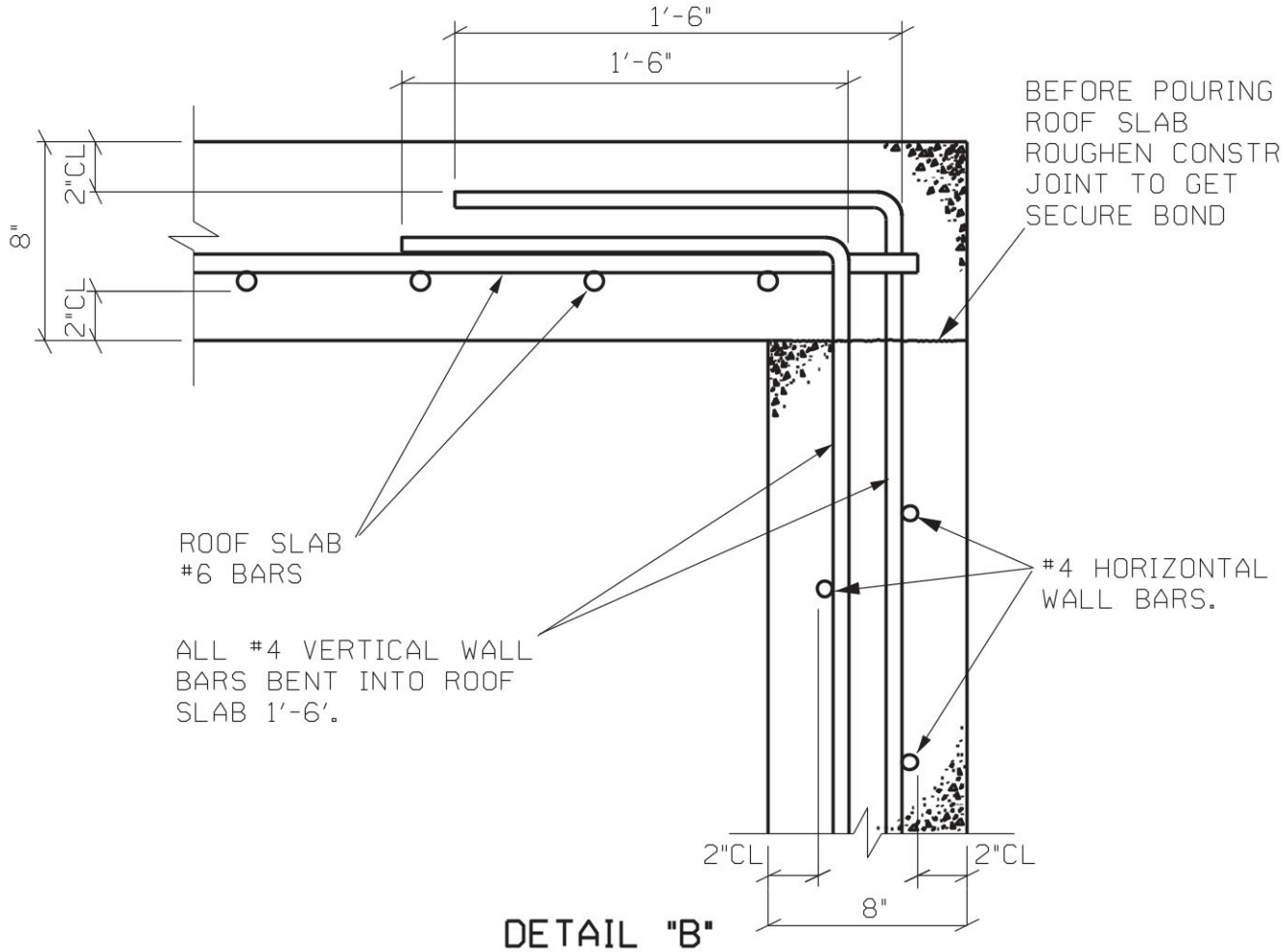

DETAIL "B"

CONSTRUCTION JOINT
USE FOR CAST-IN-PLACE CONSTRUCTION

DRAWN BY: LC	TITLE: M.H. CONSTRUCTION JOINT DETAILS	REV. NO. / BY / DATE
CHECKED BY:		1
APPROVED BY: CALVIN CHOY		2
SCALE: 1½" = 1'-Ø"		3
DATE: 8-23-94		4
		5
		DGN NO. SEC6-3

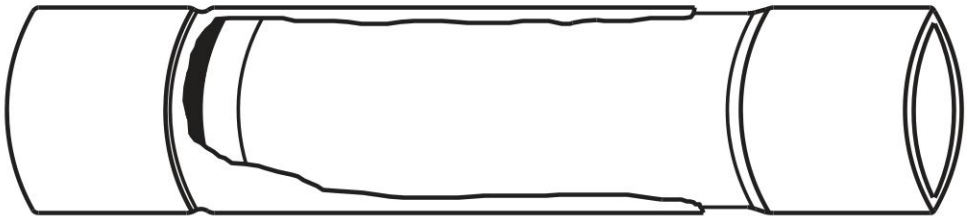

E945N EXPANSION COUPLING

NOT TO SCALE

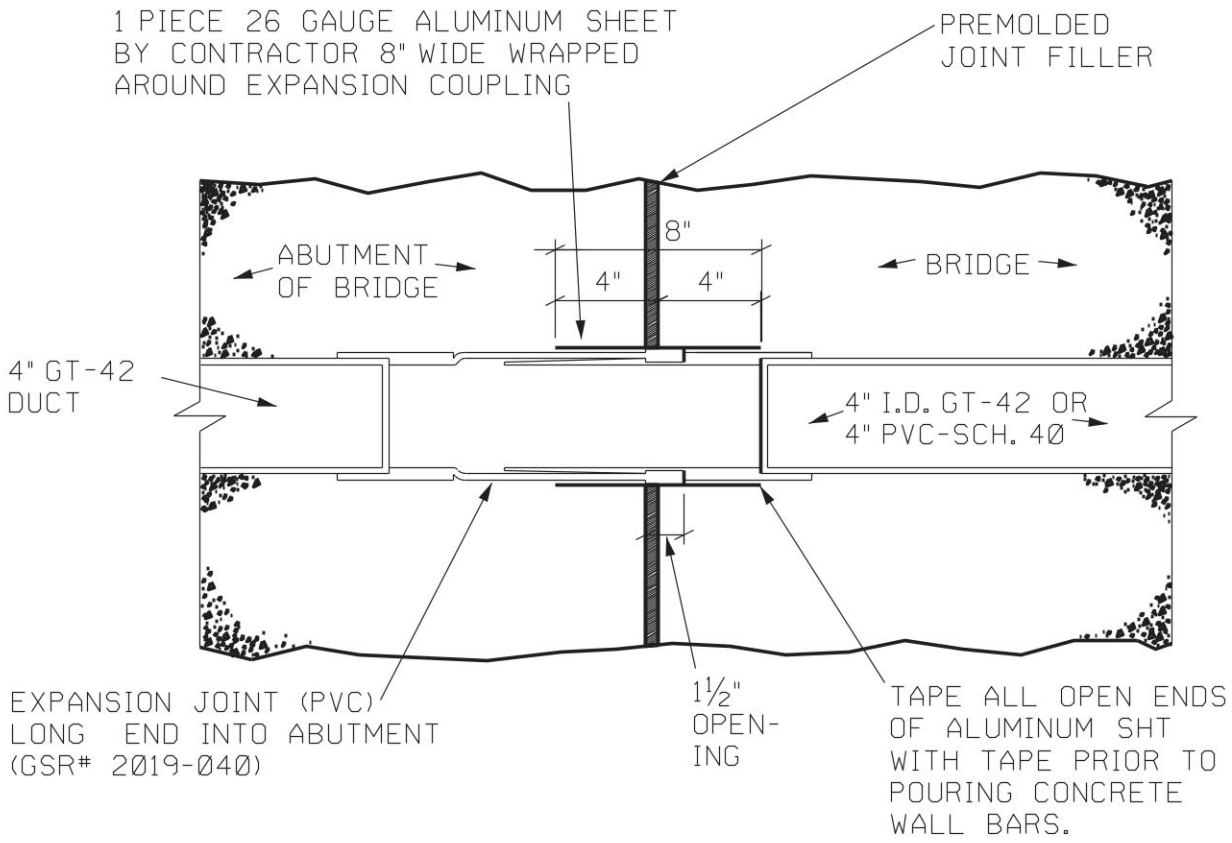

AT ABUTMENT LOCATION

NOT TO SCALE

DRAWN BY: LC	TITLE: TYPICAL EXPANSION JOINT DETAILS	REV. NO. / BY / DATE
CHECKED BY:		1 / D.N. / 11/28/03
APPROVED BY: CALVIN CHOY		2
SCALE: 1½" = 1'-0"		3
DATE: 8-23-94		4
		5
		DGN NO. SEC6-4

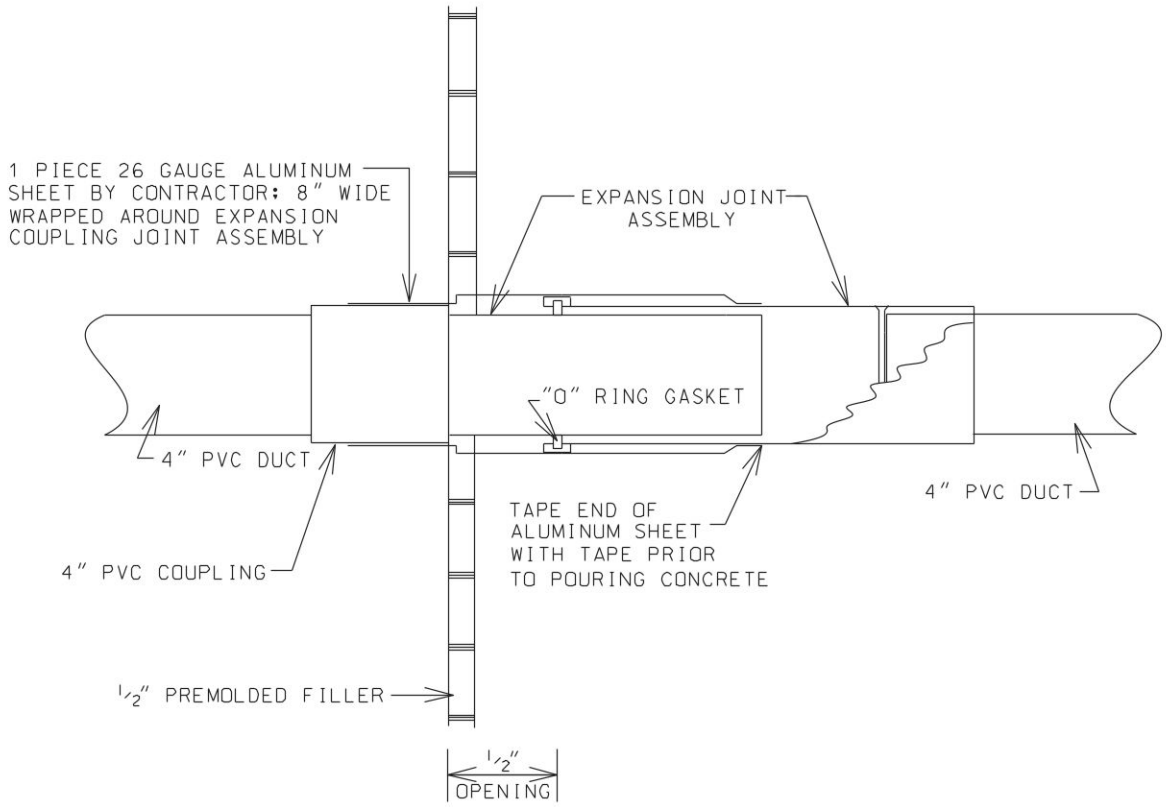

DRAWN BY: LC	TITLE:	REV. NO. BY DATE
CHECKED BY:		1
APPROVED BY: CALVIN CHOY	EXPANSION JOINT ASSEMBLY	2
SCALE: 3/4" = 1'-0"		3
DATE: 8-23-94		4
		5
		DGN NO. SEC6-5

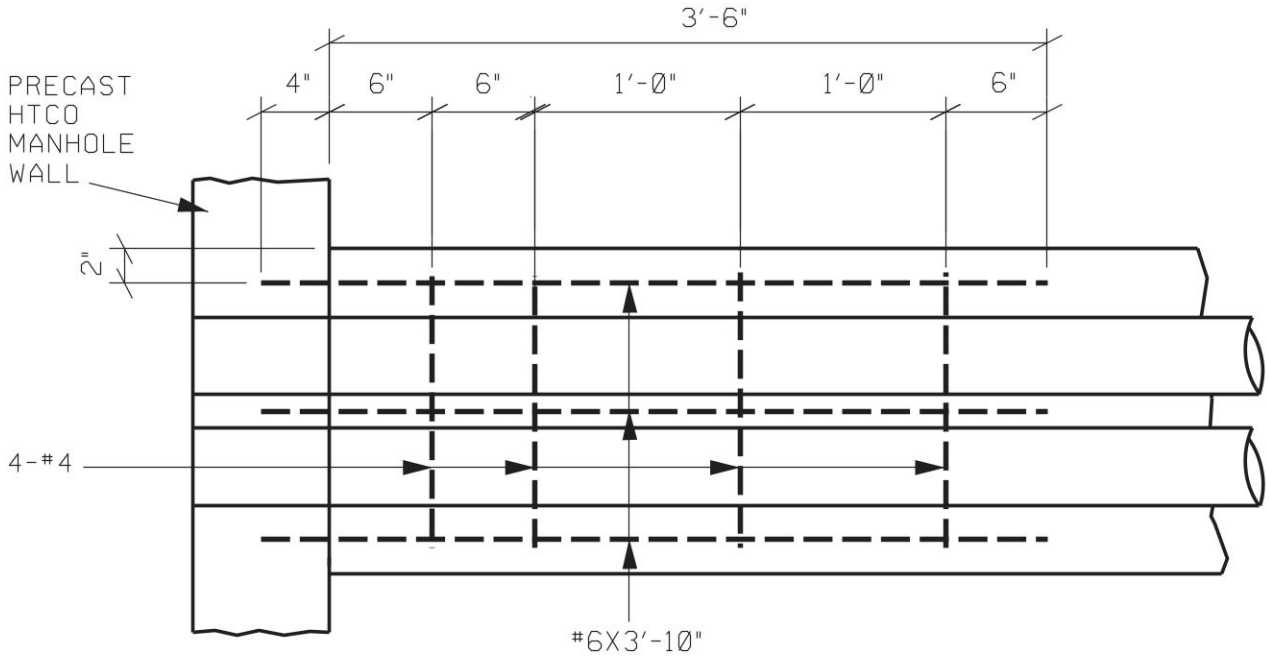

DUCT BANK CONNECTION TO HTCO PRECAST TYPE MANHOLE

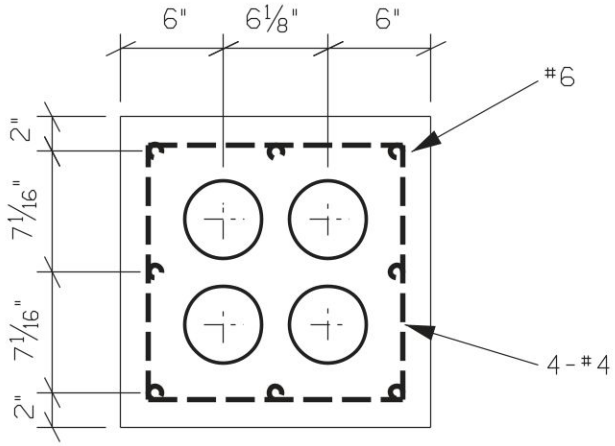

CORED DUCT OPENINGS

DRAWN BY: LC	TITLE: DUCT BANK CONNECTION TO HTCO PRECAST TYPE MANHOLE AND/OR CORED DUCT OPENINGS	REV. NO. / BY / DATE: 1, 2, 3, 4, 5
CHECKED BY:		
APPROVED BY: CALVIN CHOY		
SCALE: 1" = 1'-Ø"		
DATE: 8-23-94		DGN NO. SEC6-6

NOTE:
SIGN SHALL HAVE A YELLOW BACKGROUND. BLACK LETTERINGS, AND A BLUE TELEPHONE SYMBOL.

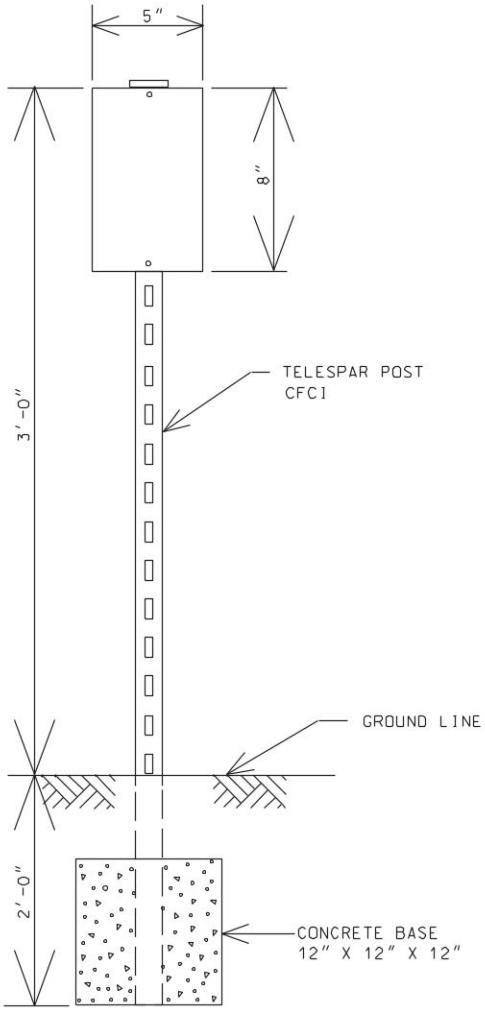

CABLE MARKER DETAIL

NOT TO SCALE

DRAWN BY: LC	TITLE:	REV. NO. BY DATE
CHECKED BY:		1
APPROVED BY: CALVIN CHOY	CABLE MARKER DETAIL	2
SCALE: 3/4" = 1'-0"		3
DATE: 8-23-94		4
		5
		DGN NO. SEC6-7

SECTION 7:

CONCRETE COLLARS FOR LANDSCAPE AREAS

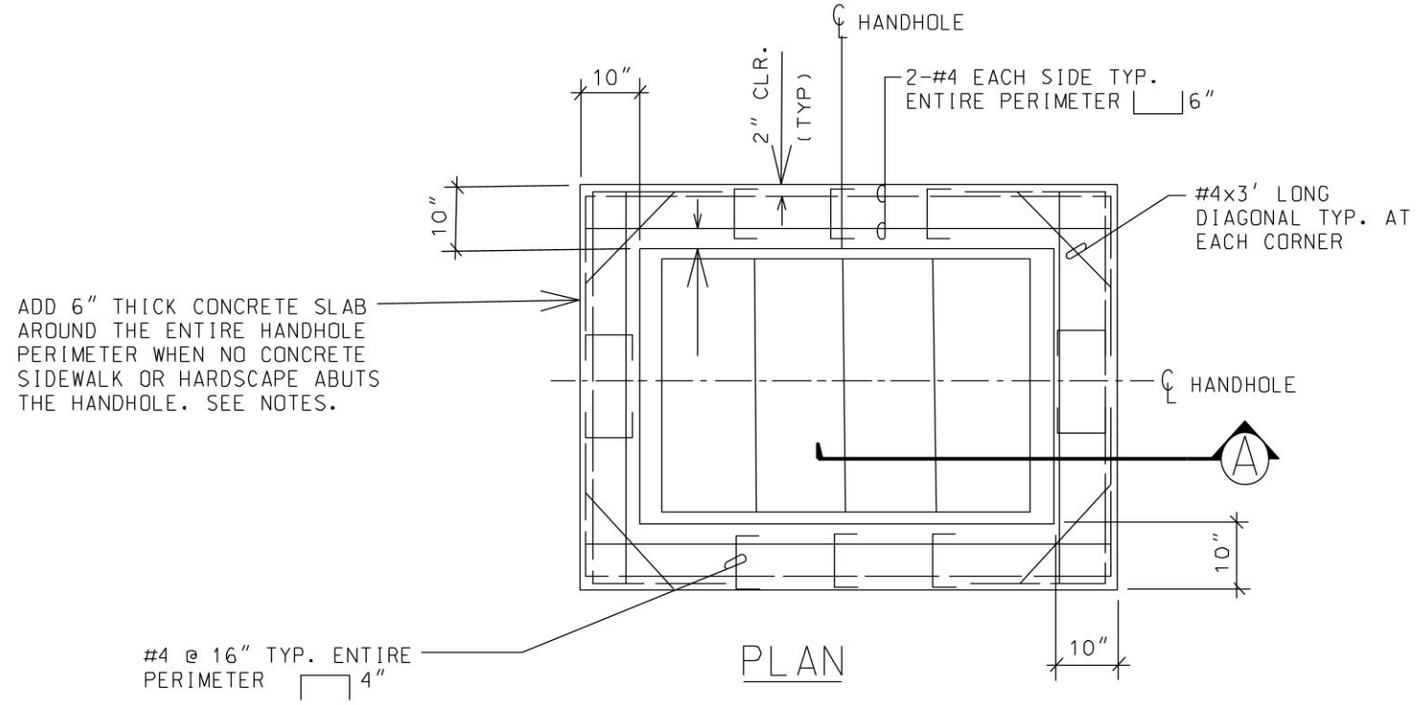

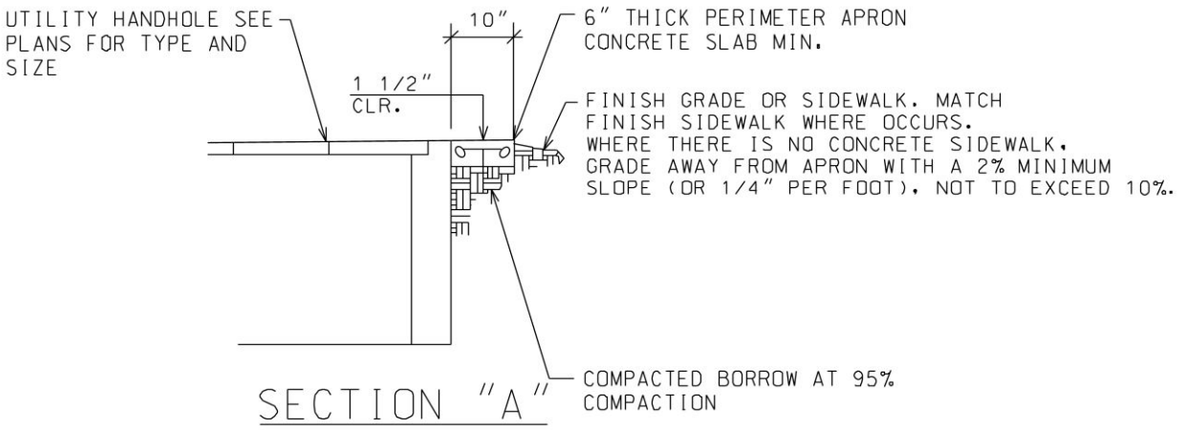

NOTES:

1. PERIMETER SLAB WITH REINFORCEMENT SHALL BE PLACED ON ALL SIDES OF HANDHOLES WHERE NO CONCRETE SIDEWALK OR CURB ABUTS THE TOP OF HANDHOLE.

2. WHERE CONCRETE SIDEWALKS OR CURBS ARE LESS THAN 10" FROM THE SIDES OF THE UTILITY HANDHOLES, THE PERIMETER SLAB SHALL BUTT UP AGAINST THE SIDEWALK OR CURB (AND MAY BE LESS THAN 10" WIDE).

3. FOR OTHER CONDITIONS, CONSULT WITH THE ENGINEER OR INSPECTOR.

4. ALL SURFACES SHALL BE SMOOTH AND FREE OF DEFECTS. TOP OF FINISH SHALL HAVE A NON-SLIP BROOM FINISH. ROUND EXPOSED EDGES TO $^{1}/_{8}$" RADIUS.

DRAWN BY: JO	TITLE:	REV. NO. BY DATE
CHECKED BY:		1
APPROVED BY: PAUL HANOHANO	CONCRETE COLLAR	2
SCALE: NTS		3
DATE: 8-8-24		4
		5
		DGN NO.

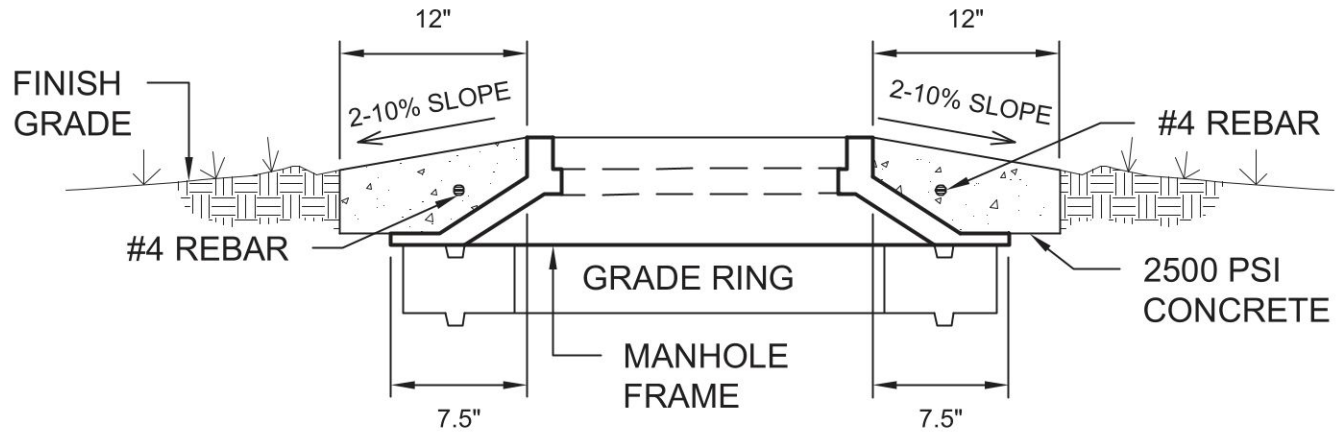

SECTION VIEW

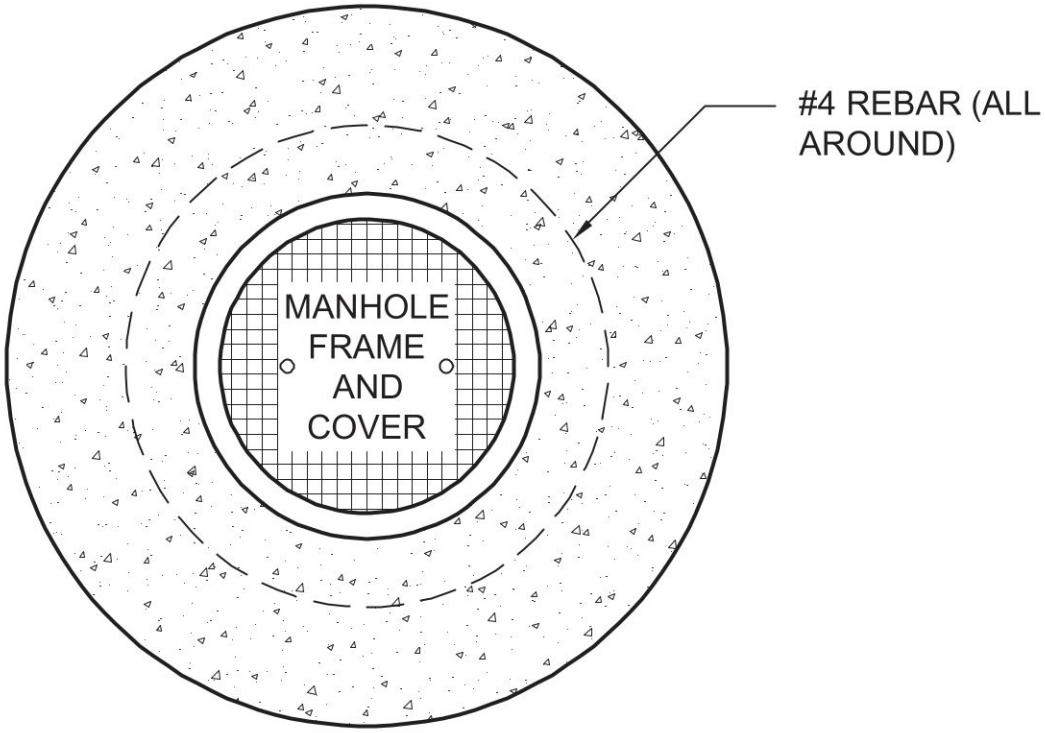

PLAN VIEW

WORK SAFELY HIGH VOLTAGE

POWER CO_____
_____KV_____PHASE
CONNECTED_____
GROUNDED_____
COMMENTS_____

PROPRIETARY INFORMATION FOR USE BY AUTHORIZED HAWAIIAN TELCOM EMPLOYEES ONLY

CODES:

PCAT: C.O.

ENG _____ TEL _____

DRAWN BY _____ DATE _____

APP'D _____ SHT _____ OF _____

TITLE:

HAWAIIAN TELCOM - MANHOLE CONCRETE COLLAR (IN LANDSCAPE AREAS)

Hawaiian Telcom

W.C.: WO NO.: CTRL:

SECTION 8:

GENERAL CLEARANCE AND SEPARATION

GUIDELINE FOR COMMUNICATION FACILITIES CLEARANCES

		Minimum Vertical Clearances	
Nature of Surface Below		Telecom Wires or Cable	Telecom Service Drops
1.	Highways, Streets, Roads or Alleys in Urban or Rural Areas	18 Ft.	18 Ft.
2.	Railroad	25 Ft.	25 Ft.
3.	Driveways in Urban or Rural Areas: a. Commercial or Agricultural Premises b. Residential Premises	 18 Ft. 18 Ft.	 16 Ft. 12 Ft.
4.	Private vehicular entrance to fields, orchards etc. in rural areas	16 Ft.	16 Ft.
5.	Areas not under cultivation and over which there is no likelihood of vehicular traffic, including areas accessible to horseback riders	13 Ft.	13 Ft.
6.	Areas Accessible to Pedestrians Only : a. Industrial and Commercial Only b. All Other Areas	 10 Ft. 10 Ft.	 12 Ft. 10 Ft.

Minimum Horizontal Clearances of Poles from Other Objects	
Fire Hydrants	4 Ft.
Curbs	12 inches from surface of pole to field side of curb
Railroad Tracks	12 Ft. measured for nearest rail

Note:
Under no circumstances shall minimum clearances be less than those contained in the current National Electrical Safety Code.

SECTION 9:

GUIDELINES FOR INSTALLATION AND REPAIR OF POLES AND UNDERGROUND SERVICE CONNECTION

NATIONAL POLLUTANT DISCHARGE ELIMINATION SYSTEM (NPDES) REQUIREMENTS FOR HAWAIIAN TELCOM PROJECTS

GUIDELINES FOR INSTALLATION AND REPAIR OF POLES AND UNDERGROUND SERVICE CONNECTION

Purpose:

To provide guidelines for Hawaiian Telcom, Inc. workforce and contractors dealing with construction debris management during utility installation, replacement and repair of utility poles and/or underground service.

Scope:

Utility pole operations included excavating a new pole hole, stockpiling the excavated material adjacent to the hole, installing of pole, backfilling, and compacting and restoration of surrounding area. Underground service installation and repair include excavating of trench, exposing of existing service facilities, demolishing concrete and/or asphalt, stockpiling of soils and rubble adjacent to excavated area, backfilling, compacting, restoring finish material and removing of construction debris.

Procedure:

1. General
    a. Complete pole replacement activities and underground service repairs within the assigned workday, if possible.
    b. Generally, excavation of hole and placement of pole should be complete in one day. If not possible all work shall be completed within timeframe specified in the engineering work guidelines.
    c. At all times soil stockpile, construction debris and any material used to secure the excavated area shall be placed in a manner as to not block, restrict or endanger pedestrians, and/or disable citizens from accessing the sidewalk.
    d. Any alternative procedures for handling construction stockpile or debris must be submitted and approved by the Hawaiian Telcom inspector.

2. Removal of Clean Soil
    a. Choose a location to stockpile material that is away from areas of high runoff and that minimizes the potential for the soil and construction debris to wash into storm drains or nearby waterways. Further, stockpile should be located so as not to block or impede pedestrian access to sidewalks.
    b. Place and cover the stockpile construction soil and debris with plastic sheeting. This sheeting should be durable enough to withstand mechanical stress induced by heavy equipment and machinery used to load, unload and work stockpile material.
    c. Sheeting shall be anchored to prevent stockpile exposure.

3. Removal of Contaminated Soil
   If petroleum contaminated soil is encountered during excavation work:
    a. Notify the Hawaiian Telcom Inspector who will notify the appropriate parties from there.

4. Excavated Hole Left Unattended
    a. Cover hole and trench with steel plates or with plywood weighted down with sand bags.
    b. Cordon off area with barricades equipped with a blinking warning light and caution tape.

NATIONAL POLLUTANT DISCHARGE ELIMINATION SYSTEM (NPDES) REQUIREMENTS FOR HAWAIIAN TELCOM PROJECTS

General Guidelines

1. The contractor shall install devices and utilize best management practices (BMPs) appropriate for the project. The contractor shall reference the City and County of Honolulu's *Best Management Practices Manual for Construction Sites in Honolulu,* and *Rules Relating to Soil Erosion Standards and Guidelines*. A copy of each of those documents shall be kept on the project site at all times, and shall be produced upon request of the District Engineer or their designated representative. These documents shall serve as guidelines only, and it shall be the Contractor's responsibility to ensure that safety relative to traffic, ponding problems, etc. are considered and addressed. This work shall be considered part of the project, and will not be considered additional costs to Hawaiian Telcom.
2. The Contractor shall consider and install BMP measures which take into account high intensity and prolonged rainfall, and to address the potential problems that may result.
3. The State reserves the right to determine the appropriateness and adequacy of proposed and/or implemented BMPs. Additional BMP measures required by the State shall not be paid for by Hawaiian Telcom.
4. The Contractor shall be responsible for all damages and/or injuries resulting from their BMPs.
5. The Contractor shall designate at least one (1) person who will be responsible for inspection, maintenance, and repair activities. Personnel selected for the inspection and maintenance responsibilities shall receive training from the Contractor, at the Contractor's expense. Training shall include inspection and maintenance practices necessary for minimizing erosion and sediment and for retaining sediment on-site.
6. Discharges into State Waters due to dewatering and/or hydrotesting activities require separate NPDES permit(s) from the State Department of Health (DOH). If the Contractor chooses to discharge dewatering effluent into State Waters, he shall obtain the necessary permit(s) from the DOH, and shall submit a complete set of the permit to the Department of Transportation, Highways division, District Office or respective County permitting office prior to commencing the permitted activity. No dewatering activities will be authorized until the receipt of the NPDES permit(s) from the DOH.
7. The Contractor shall be responsible for any citations or fines that may be levied as related to the NPDES program.
8. The Contractor may discuss proposed and implemented BMP measures and the adequacy of them, with the Engineer.

Structural Best Management Practices

Examples of structural BMPs include, but are not limited to:

- Silt fences
- Inlet protection
- Coverings
- Filter berms
- Sediment traps
- Sediment basins

1. The Contractor shall inspect erosion and sediment control measures twice daily and after 0.5 inches of rainfall.
2. If repairs to or maintenance of the Contractor's erosion control measures are necessary, the Contractor shall initiate the repairs or maintenance within twenty-four (24) hours after inspection and noting of the deficiency.
   Repairs and maintenance may include the following:
   a. Replacing silt fence fabric when tears are found, and ensuring that the fabric is securely attached to the fence posts and firmly in the ground.

b. Removing and disposing of sediment material when sediment build-up reaches one-third (1/3) the height of a silt fence.
c. Removing and disposing of sediment material when the depth in a sediment basin reaches ten percent (10%) of the design capacity.
d. Restoring bare spots and washouts, and ensuring healthy plant growth in both temporary and permanent seeded and planted areas.

3. The Contractor shall make every effort to install structural BMPs near the pollutant source as practicable. Inlet protection shall serve as the last measure to prevent pollutants from entering the storm drain system.

Non-Structural Best Management Practices

Waste Disposal

1. Waste Materials
   All waste material shall be collected and stored in a securely lidded, leakproof metal dumpster. The dumpster shall meet all City and State solid waste management regulations. All dumpsters at the project site shall be emptied a minimum of once per week, and more often if necessary. No construction materials shall be buried on-site. The Contractor, at their expense, shall train supervisory personnel in the correct procedures for waste disposal.
2. Hazardous waste material shall be disposed of in a manner permitted by local, State or Federal regulations.
3. Sanitary Waste
   All sanitary waste shall be collected from potable restroom facilities a minimum of once per week, and more often, if necessary.

Erosion and Sediment Control Inspection and Maintenance Practices

1. All erosion and sediment control measures shall be inspected daily prior to and after each day's construction.
2. All control measures shall be maintained in good working order. If a repair is necessary, it shall be initiated within twenty-four (24) hours of the problem being discovered.

Spill Prevention

1. The following material management practices shall be followed to reduce the risk of spills or other accidental exposure of material and substances to storm water runoff and discharge.
   a. Good Housekeeping
      - Store only enough products and material required to perform the job.
      - Materials that may become potential pollutants that are stored outside shall be stored in neat and orderly manner in their original containers, and if possible, covered or enclosed.
      - Products shall be kept in their original containers, with the original manufacturer's labeling.
      - Products shall not be mixed, except as recommended or allowed by the manufacturers.
      - Appropriate products shall have secondary containment.
      - Whenever possible, use up all of the product prior to disposing of the container.
      - Manufacturer's directions for proper use and disposal shall be followed.
      - Material shall be disposed of in a manner permitted by local, State or Federal regulations.
      - Contractor shall conduct daily inspections to ensure proper use and disposal of material.
      - Litter shall be picked-up on a daily basis and disposed of properly.
      - Dist shall be controlled by wetting or by the application of a soil binder.
   b. Hazardous Products

- Products shall be kept in their original containers, with the original manufacturer's labeling.
- Material safety data sheets (MSDS) shall be retained and available for review by users.
- Manufacturers' directions for proper use and disposal shall be followed.
- All hazardous waste material shall be disposed of in a manner permitted by local, State or Federal regulations.

2. Product Specific Practices
   The following practices shall be followed on-site:
   a. Vehicles
      All on-site vehicles shall be monitored for leaks and shall be subject to regular preventative maintenance to reduce the chance of leaks occurring. Leaks that cannot be repaired immediately shall be contained in spill pans or other appropriate containers.
   b. Petroleum Products
      Petroleum products shall be stored in tightly sealed containers that shall be clearly labeled. Asphalt-containing materials (such as tack and prime coats) used on-site shall be applied according to manufacturers' directions.
   c. Concrete Trucks
      Concrete trucks shall discharge drum wash only at designated sites. Wash water shall not be discharged to the storm drain system. The contractor shall contain the discharged drum wash water at the designated site, and shall remove concrete and other residue as required by the Engineer.
3. Spill Control Practices
   In addition to good housekeeping and material management practices, the following spill prevention and cleanup practices shall be observed:
   - Manufacturers' recommendations for spill cleanup be clearly posted, and site personnel shall be made aware of the procedures and location of cleanup supplies.
   - Materials and equipment necessary for spill cleanup shall be kept in the material storage area on-site.
   - All spills shall be cleaned up immediately after discovery.
   - All spill areas shall be kept well ventilated, and cleanup personnel shall wear appropriate clothing and equipment.
   - Toxic or hazardous material spills, regardless of size shall be reported to the appropriate government agencies. A report shall be prepared to include measures to prevent this type of spill in the future, and how to cleanup such a spill. A description of the spill, the cause, and the cleanup measure undertaken shall also be included in the report.
   - The Contractor shall be responsible for spill prevention and cleanup. He shall designate at least one on-site personnel to receive spill prevention and cleanup training. The Contractor, at their expense shall do training. The name of this person shall be posted in the material storage area and in the on-site office trailer.

SECTION 10:

QUALITY ASSURANCE

SITE INSPECTION CHECKLISTS

QUALITY ASSURANCE SITE INSPECTION
ITEMS TO BE VERIFIED AND ACCEPTED

Maintenance Hole, Handhole and Pullboxes

Pre-acceptance Checklist

- Correct quantity, size and type of reinforcing bars provided.
- Reinforcing bars clean and free of scaling rust.
- Reinforcing bars are adequately protected by concrete.
- Maintenance hole opening and sump hole properly sized and located.
- Pulling eyes properly sized and located.
- Duct windows properly located and correct number of terminators provided.
- Ground rod provided and properly located.
- Correct strength of concrete provided.
- For integrally bonded maintenance holes, reinforcing bars properly bonded.
- Excavated pit flat, smooth and free from rocks, debris and deleterious material.

Acceptance Checklist

- All interior walls and ceiling cement washed or painted with non-toxic white latex, and free of irregularities.
- All surfaces free from rock pockets, honey-combed areas, and cracks that allow water migration.
- Correct quantity, size and type of insert/anchor bolts provided and free of debris and grit.
- Pulling eyes, sump holes and maintenance hole opening properly located.
- Duct window and terminators properly located and finished flushed to inner wall.
- Ducts capped with graduated pull tapes provided.
- Maintenance hole frame and cover provided and properly installed.
- Maintenance hole duct line system water tight and free from seepage.

Duct line Checklist

Pre-acceptance Checklist

- All HT ducts to cross above electrical ducts.
- All trenches smooth, level and mechanically compacted.
- Plastic spreaders provided and properly spaced.
- Correct type of conduits, couplings, bends and risers provided.
- Joints properly glued to insure water-tight connections and staggered to insure adequate interstices.
- Directional changes made with adequate lengths of straight ducts, bends, and couplings to insure passage of HAWAIIAN TELCOM provided test mandrel. All sharp bends should be tested with HAWAIIAN TELCOM provided mandrel prior to pouring of concrete.
- Ducts adequately anchored to bottom of trench to avoid floating and movement during concrete pour.
- Backfill material provided meet minimum standard per technical provision.
- Correct strength of concrete provided.

Acceptance Checklist

- All ducts shall pass HAWAIIAN TELCOM provided test mandrels. Mandrels shall be a solid hardwood block, 12-inches long and having a diameter of 1/4” less than inside diameter of ducts to be tested.
- Ducts shall be free of all particles of earth, sand, gravel or other debris.
- Mule tapes provided in all ducts and capped immediately after testing.

The inspector is not required to accept the infrastructure until all construction in the area is complete.

SECTION 11:

SPECIFICATIONS FOR CONDUIT AND FITTINGS

TABLE OF CONTENTS

		PAGE
1.	GENERAL	2
2.	APPLICABLE DOCUMENTS	2
3.	DESCRIPTION	2
3.1	Type “DB” (minimum Schedule 40) Conduit for Direct Burial	
3.2	90° Riser Pipe Sweep (Schedule 80)	
3.3	Fittings and Accessories	
3.4	Function of Conduit	
4.	PHYSICAL REQUIREMENTS	3
4.1	Material Requirements	
4.2	Mechanical Requirements	
4.2.1	Visual	
4.2.2	Dimensions	
4.2.3	Assembly	
4.2.4	Identification	
5.	ELECTRICAL REQUIREMENTS	5
6.	ENVIRONMENTAL REQUIREMENTS	5
6.1	Fungus	
6.2	Ultraviolet Resistance/Flame Retardant	
7.	ENDURANCE REQUIREMENTS	5
7.1	Impact Resistance	
7.2	Load Deflection (Pipe Stiffness)	
7.3	Heat Distortion	
8.	PACKING AND SHIPPING	6
9.	REGULATORY AND SAFETY	6
10.	PRODUCT SUPPORT	6
10.1	Documentation	
10.2	Technical Support	
10.3	Quality Control/Quality Assurance Program	
10.4	Product Enhancement	
11.	WARRANTY	7
12.	RELIABILITY	7
13.	TECHNICAL COMPLIANCE	7
13.1	Product Performance Evaluation	
13.2	Manufacturer/Vendor Technical Qualification	
13.3	Quality Assurance Audit	
14.	COMMERCIAL REQUIREMENTS	8
Figure 1	Type “DB” Straight Conduit With Integral Bell	9
Figure 2	Type “DB” Conduit Couplings	10
Figure 3	Type “DB” Conduit Bends	11

1. GENERAL

The purpose of this specification is to establish the minimum requirements that Underground Polyvinyl Chloride (PVC) Communications Conduit must meet for consideration as a HAWAIIAN TELCOM standard product and to establish the conditions for standardization. This specification is the responsibility of the HAWAIIAN TELCOM OSP Engineering Department.

1.2 This document provides various physical, mechanical, environmental and endurance requirements as well as general test methods or procedures for ensuring compliance to these requirements.

1.3 This document is not to be construed as a suggestion to any manufacturer to develop, modify or change any of its products, nor does this document represent any commitment by HAWAIIAN TELCOM or any of its affiliates to purchase any product whether or not it provides the described characteristics.

2. APPLICABLE DOCUMENTS

The following documents of the latest issue form a part of this specification to the extent specified herein:

ASTM D 1784	Rigid polyvinyl Chloride (PVC) Compounds and Chlorinated Polyvinyl Chloride Compounds (Paragraphs 4.1.1).
ASTM D 2122	Dimensions of Thermoplastic Pipe and Fittings (Paragraph 4.2.2).
ASTM D 2412	External Loading Properties of Plastic Pipe by Parallel-Plate Loading (Paragraph 7.2).
ASTM D 2444	Impact Resistance of Thermoplastic Pipe and Fittings by Means of a Tup (Falling Weight) (Paragraph 7.1).
ASTM D 2466	Standard Specification For Polyvinyl Chloride (PVC) Plastic Pipe Fittings, Schedule 40 (Paragraph 4.2.2).
ASTM D 2564	Solvent Cements for Polyvinyl Chloride (PVC) Plastic Pipe and Fittings (Paragraph 4.1.6).
ASTM D 3138	Solvent Cements for Transition Joints between ABS and PVC Non-pressure Pipe Fittings (Paragraph 4.1.6).
ASTM F 512	Standard Specification for Smooth-Wall Polyvinyl Chloride (PVC) Conduit and Fittings for Underground Installation (Paragraph 4.1.5 and 4.2.2).
BICSI OSP-DRM	Types of Conduit (Chapter 4, Section 1, pg 4-28)
UL 651	Schedule 40 and 80 Rigid Polyvinyl Chloride (PVC) Conduit (Paragraph 4.1.2 and 6.2)

3. DESCRIPTION

3.1 Straight underground plastic conduit is extruded Polyvinyl Chloride (PVC) plastic tubing which is available in specified lengths and diameters. One end of each length has an integral bell which allows the conduit section to be mated with another conduit section, sweep, bend, etc. The conduit is of the following type:

Type "DB" or Direct Buried conduit (minimum Schedule 40) - Thick wall plastic conduit designed to be installed without the encasement in concrete. This conduit will only be available in 2" and 4" nominal inside diameters. Split conduits will also be available for conduit repairs.

3.2 90° Riser Pipe Bend (Schedule 80) - Some local regulations require that communication riser pipes meet the minimum requirements equivalent to a 2.5" Schedule 80 pipe. This specification will include 2" and 4" 90° bends custom fit to couple with the standard conduit dimensions described in Paragraph 4.2.2 and Figures 1 and 2. This eliminates future requirements for galvanized iron pipe (GIP).

3.3 Fittings and Accessories, Etc. - In addition to the straight conduit units, the following conduit items are also covered by this specification:

* Couplings for joining sections (see Figure 2).
* Expansion couplings for joining sections.
* Various 22.5°, 30°, 45° and 90° bends (see Figure 4, Note: These bends do not include the Schedule 80 riser pole bend described in Paragraph 3.2 and Figure 3).
* Female/Male adapters to accommodate various types of existing installed conduits.
* Terminators for maintenance holes and splice boxes to fit conduit outside diameters referenced in this specification.

3.4 Function of Conduit - The primary function of conduit is to allow for a systematic underground installation of a multiple cable system in a minimum amount of space and time, and also providing protection for the installed cables.

The secondary functions are to allow for future growth of the cable system without re-excavation and for convenient removal and repair of damaged or obsolete cables.

Conduit is normally installed between maintenance holes/splice boxes, maintenance holes/splice boxes to riser poles, maintenance holes/splice boxes to central office cable vaults or maintenance holes/splice boxes to building entrances. There may be an occasion to direct bury conduit without connecting to a maintenance hole or splice box, such as; for future street crossings, pole to pole conduit dips, etc.

4. PHYSICAL REQUIREMENTS

4.1 Material Requirements

4.1.1 Type "DB" plastic conduit shall be made of polyvinyl chloride (PVC) plastic compound which meets the minimum cell classification of PVC 12264-A or B (with a minimum tensile modulus of 500,000 psi) as defined in ASTM D 1784.

4.1.2 The 90° Schedule 80 riser pipe shall be made of polyvinyl chloride (PVC) plastic compound which meets or exceeds the impact requirements of Schedule 80 pipe defined in UL 651.

4.1.3 The resin material used for all plastic conduit shall be 90 percent virgin. Not more than 10% regrind material can be used and the regrind material shall not be from a dissimilar product. Any regrind material shall be from the manufacturer's own plastic conduit products.

4.1.4 All Type "DB" conduit and the 90° Schedule 80 riser pipe bends will be gray in color.

4.1.5 All couplings, bends, adapters, etc., shall be made from the material requirements specified in ASTM F 512, Section 5.1.

4.1.6 Solvent cements used for the PVC plastic conduit shall be in accordance with ASTM D 2564. Also, solvent cements used to join new PVC with existing ABS (Acrylonitrile-Butadiene-Styrene) shall be in accordance to ASTM D 3138.

4.1.6.1 Solvent cement and primer shall be capable of being applied to the conduit, associated fittings and terminators in an outdoor working temperature to form a completely strong and watertight joint. Compatibility to form watertight joints shall be determined by joining two sections of conduit, each at least 15 inches long, and allowing the joint to cure for 24 hours at a temperature of 20°C (68°F). Joints shall show no evidence of leakage when subjected to an internal pressure of 5 psig for 24 hours.

4.1.6.2 The label for each individual container of cement or primer shall indicate the type of plastic (PVC or ABS) for which it is intended. Solvent cements are toxic and flammable; therefore, the marking on each label shall also provide cautionary information in conformance with the Federal OSHA and Hazardous Substances Act and U.S. Department of Transportation regulations.

4.2 Mechanical Requirements

4.2.1 Visual - All conduit shall be homogeneous throughout and free of visible surface flaking, chips, holes, cracks, foreign matter or the manufacturing defects that would impair the service of the conduit. The bore of the conduit shall be smooth and free of obstructions. The products shall be as uniform as commercially practicable in respect to color, opacity, density and other physical properties. All conduit ends shall be squarely cut, free of all burrs with rough and sharp edges removed.

4.2.2 Dimensions - Type “DB” conduit, fittings and other accessories shall meet the dimensional requirements of Figures 1 and 2 (this specification), and ASTM F 512 when measured in accordance with ASTM D 2122. The bell end interference fit dimensions are referenced in ASTM D 2466, Table 1, Columns A and B. The 90° Schedule 80 riser pipe bend shall meet the dimensional requirements of Figure 3 and the inside diameter on each end will be factory chamfered at a minimum of 1/2” from each end edge to match the inside diameters of the straight conduit it will be associated with (see Figure 3). The inside wall of the spigot end of all straight conduit and bends shall also be chamfered one-half the wall thickness at a 30° angle. Maintenance hole and splice box terminators provided by the manufacturer will be dimensionally compatible with the respective conduit.

4.2.3 Assembly

4.2.3.1 Plastic conduit shall be capable of being cut with an ordinary handsaw.

4.2.3.2 Type “DB” conduit sections shall be capable of being joined by solvent welding or another method recommended by the manufacturer. the method of joining shall be such that the finished joint is smooth and flush with the inner surface of the conduit. A test ball of the diameter particular to the internal diameter of the conduit under test shall be capable of freely passing through all conduit joints (see required sizes below which exclude the 90° riser pipe bend):

Nominal Conduit Size	Test Ball Diameter
2.0”	2.0”
4.0”	4.0”

If another joining method other than solvent welding, is recommended by the manufacturer, it shall also meet the watertight requirements described in Paragraph 4.1.6.1.

4.2.4 Identification

4.2.4.1 Each unit of straight conduit, all bends, couplings, expansion couplings, etc., shall be marked with permanent and legible characters on the exterior surface of the plastic, at intervals of 5 feet or less, with the following information:

* Material (PVC).
* Nominal inside diameter size (2" or 4").
* Specification Number.
* Type (DB Schedule 40 or Schedule 80 riser pipe).
* Date of Manufacture or Batch Number.
* Manufacturer Name or Trademark.
* Fabricator Name (Items other than straight conduit).
* Bends will show degree of curvature and radius in inches or feet.
* Expansion coupling markings will appear on the bell.

4.2.4.2 The spigot end of each conduit shall be marked with a permanent and legible circumferential line as follows:

Conduit Size	Inches From the End Tolerance +.250", -0"
2.0"	2.250"
4.0"	3.875"

5. ELECTRICAL REQUIREMENTS

NONE

6. ENVIRONMENTAL REQUIREMENTS

6.1 All conduit shall be fungus and microbiologically inert.

6.2 The 90° Schedule 80 riser pipe bend shall have sufficient sunlight resistance and flame retardancy (self-extinguishing) when tested in accordance with UL 651.

6.3 All conduit, fittings, bends, etc., shall be capable of being stored and installed under the following conditions:

* Storage Temperature Range = -40°C (-40°F) to 70°C (158°F).
* Installation Temperature Range = -20°C (-4°F) to +40°C.
* Relative Humidity = 85-95% @ +7.2°C (45°F) to +60°C (140°F).

7. ENDURANCE REQUIREMENTS

7.1 Impact Resistance - Minimum impact resistance of "DB" plastic conduit shall be as follows when tested in accordance with ASTM D 2444, except that specimens shall be conditioned for a minimum of two hours at 0° ± 2°C (32° ± 3.6°F).

FOOT POUNDS @ 0°C

Conduit Size	Type DB
2.0"	25
4.0"	70

The impact resistance shall be determined by a 20 pound falling weight (Tup B) striking the conduit midway along the longitudinal axis.

7.2 Load Deflection (Pipe Stiffness) - At a deflection of 5%, the minimum pipe stiffness, f/DY, shall be as shown in the following table when tested in accordance with ASTM S 2412. F/DY shall be determined as indicated in ASTM D 2412:

PIPE STIFFNESS
F/DY, POUND/INCH^2 AT 5%

Conduit Size	Type DB
2.0”	120
4.0”	100

7.3 Heat Distribution - The amount of distortion caused by heat shall be determined by placing two conduit samples, each 3 ± 1/8” long, lengthwise between two rigid parallel flat plates. At a temperature of 20° ± 2°C (68° ± 3.6°F), the inside diameter of the samples shall be measured perpendicular to the flat plates to the nearest 0.001 of an inch. The top plate shall then be loaded to reflect a total load as follows:

* DB-120, 2” = 60 pounds/linear foot
* DB-100, 4” = 45 pounds/linear foot

The loaded samples shall be placed in an oven at 60° ± 2°C (140 ± 3.6°F) for a minimum of 48 hours. At the conclusion of the 48 hour period, the inside diameter shall be remeasured (hot and in the loaded condition). The resultant change in the inside diameter shall not exceed the following specified values:

Conduit Size	Maximum Allowable Decrease in ID
2.0”	0.150”
4.0”	0.250”

8. PACKING AND SHIPPING

8.1 All conduit shall be stored prior to shipping in a manner that will prevent the conduit from warping, deteriorating or suffering dimensional distortion. The conduit bends shall be banded or palletized so as to protect them during shipment, handling and storage. Couplings and other fittings shall be packed in suitable containers. The maximum straight conduit lengths will allow for a full 40 feet semi-trailer shipment.

9. REGULATORY AND SAFETY

Products provided to this specification shall meet Federal/National codes and other applicable regulatory and safety requirements.

10. PRODUCT SUPPORT

Products provided to this specification shall be supported on an ongoing basis by the following means:

10.1 Documentation

Documentation shall be available in technical specification and HAWAIIAN TELCOM practices format to ensure support of the product throughout its useful life. Documentation is required for application, engineering, installation and maintenance of the product as well as technical product specific information.

10.2 Technical Support

Support of the product shall be provided for the areas of planning, engineering, procurement, general liaison and technical communication. On site assistance shall be provided when required.

10.3 Quality Control/Quality Assurance Program

The manufacturer shall maintain, and be able to demonstrate to HAWAIIAN TELCOM, an effective quality control/quality assurance program. The program should include records, facilities, material controls, tests and inspections throughout the manufacturing process sufficient to assure that the product will conform to all the specified requirements.

10.4 Product Enhancement

The manufacturer will undertake a continuing program to enhance the product and manufacturing process in order to produce economic, feature and technology improvements. However, product changes shall not be instituted without prior approval of HAWAIIAN TELCOM.

11. WARRANTY

The manufacturer/vendor shall specify their terms and conditions on product warranty and the method of investigating and resolving disagreements.

12. RELIABILITY

The manufacturer shall specify their product reliability in terms of expected number of failures, units and time frames. The method used for reliability prediction and the method that will be undertaken to document, track and analyze the failures is required to ensure satisfactory performance over the product's useful life. The established reliability program and its results shall be made available to HAWAIIAN TELCOM.

13. TECHNICAL COMPLIANCE

13.1 Product Performance Evaluation

The technical evaluation of products provided to this specification is under the direction of HAWAIIAN TELCOM OSP Engineering Department. The manufacturer/vendor shall be required to provide samples, test data and/or results of laboratory tests of products to be evaluated to this specification. The evaluation is to assure that the product meets the technical requirements detailed in this specification.

13.2 Manufacturer/Vendor Technical Qualification

The technical qualification of the manufacturer/vendor is under the direction of HAWAIIAN TELCOM. The qualification is required to assess the technical capability of the supplier as well as the acceptability of the product to the requirements of this specification. The assessment

determines the supplier's capability to consistently manufacture a quality product, using a controlled process, to meet the specification requirements.

13.3 Quality Assurance Audit

Manufacturer/vendors chosen by HAWAIIAN TELCOM to provide products to this specification will be required to submit to periodic audits of their quality assurance and quality control programs and processes. These audits are required to assure product quality and consistency and are under the direction of HAWAIIAN TELCOM. These audits will verify the manufacturer's efforts in the following areas:

- Raw material Incoming Inspection
- In Process Quality Control Testing
- End Product Quality Assurance Testing
- Requirements Verification
- Nonconformance Rejection
- Equipment Calibration

14. COMMERCIAL REQUIREMENTS

Commercial requirements for products approved for HAWAIIAN TELCOM Standardization by this specification will be arranged by the Central Procurement Department of HAWAIIAN TELCOM. These requirements will include price, delivery, distribution and other commercial arrangements as deemed necessary by Central Procurement and agreed to by the Manager-OSP Engineering. Since these products are often purchased and installed by parties on contract to HAWAIIAN TELCOM, it is expected that the manufacturer will honor HAWAIIAN TELCOM's commercial arrangements with the company contracting to HAWAIIAN TELCOM.

FIGURE 1

TYPE "DB" STRAIGHT CONDUIT WITH INTEGRAL BELL

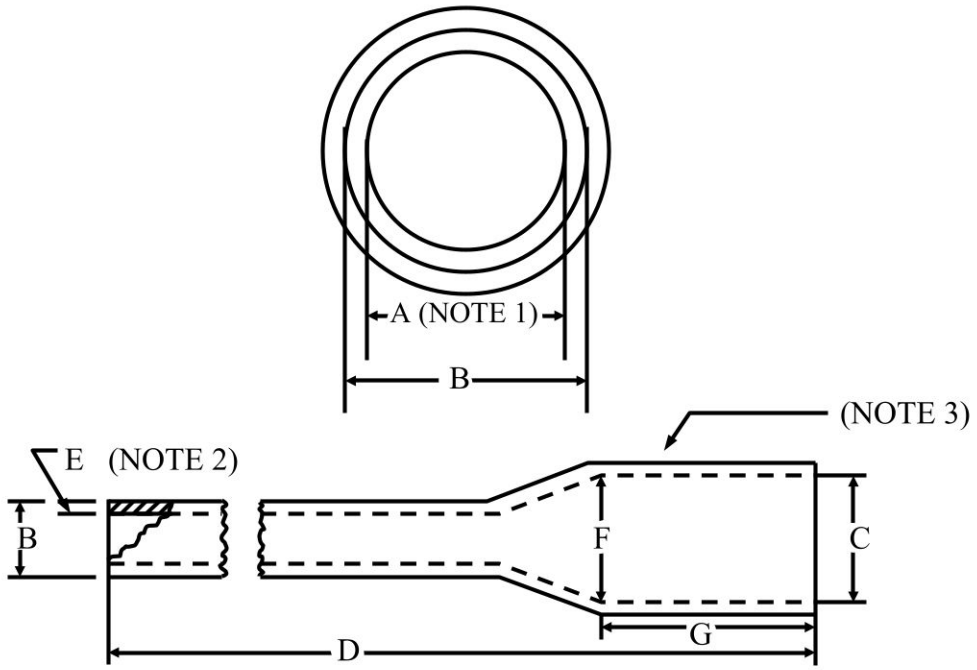

CONDUIT SIZES - DIMENSIONS (BELL END INTERFERENCE FIT)

	2"	4"
A (Minimum)	2.125"	4.091"
B (Average)	2.375" (± .006")	4.500" (± .009")
C (Average)	2.387" (± .006")	4.518" (± .009")
D (Minimum)	20' (+ Min. Bell Depth + 1.0", -0")	20' (+ Min. Bell Depth + 1.0", -0")
E (Minimum)	0.077" (+ .030", -0")	0.145" (+ .030", -0")
F (Average)	2.369" (± .006")	4.491" (± .009")
G (Maximum)	2.500" (+ 0", -.250")	4.125" (± 0", -.250")

NOTES:

1. No section of conduit including belled end shall be out-of-round by more than .060 inches for 2" and .100 inches for 4". Defined as maximum diameter minus minimum diameter.
2. The minimum wall thickness at any point shall be in accordance with the table. The actual wall thickness shall not vary by more than +.030 inches, -0".
3. The bell shall be symmetrical with, and its end perpendicular to, the conduit axis.

FIGURE 2

TYPE "DB" CONDUIT COUPLINGS

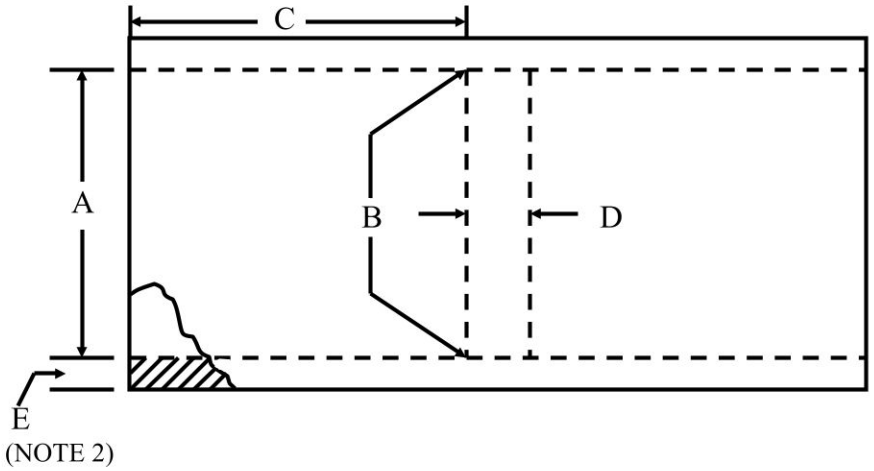

CONDUIT SIZES - DIMENSIONS

	2"	4"
A (Average)	2.393" (± .006")	4.515" (± .009")
B (Average)	2.369" (± .006")	4.491" (± .009")
C (Minimum)	1.125"	1.750"
D (Minimum)	3/32"	7/64"
E (Minimum)	0.077"	0.145"

NOTES:

1. Shall not be out-of-round by more than .012 inches for 2" and .015 inches for 4". Defined as maximum diameter minus minimum diameter.
2. The actual wall thickness for "DB" couplings shall be that required for "DB" straight conduit.

FIGURE 3

"DB" CONDUIT BENDS

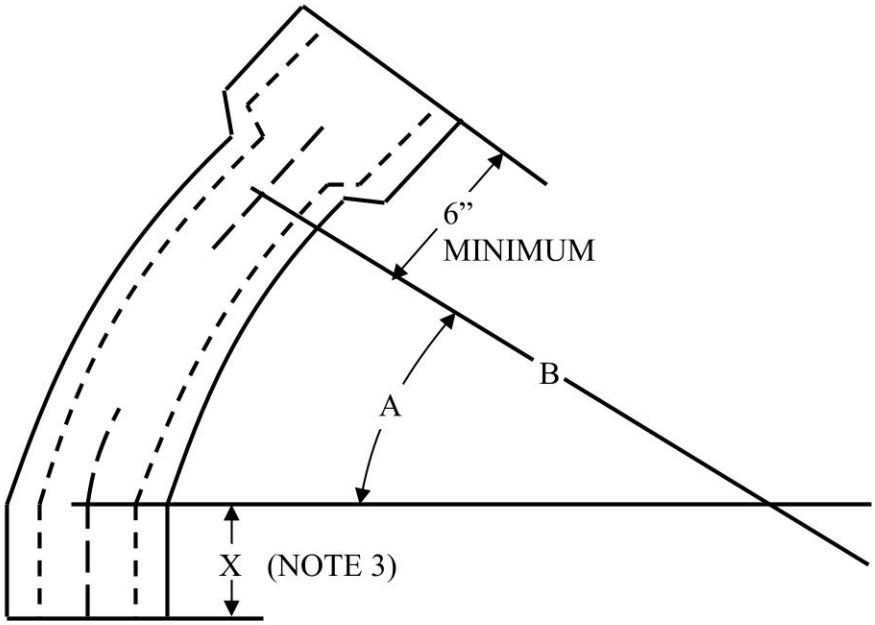

2" (A) ANGLE	2" (B) RADIUS (INCHES)	4" (A) ANGLE	4" (B) RADIUS (INCHES)
11.25	24, 36, 48, 150	11.25	24, 36, 48, 150
22.5	24, 36, 48, 150	22.5	24, 36, 48, 150
30.0	24, 36, 48, 150	30.0	24, 36, 48, 150
45.0	24, 36, 48, 150	45.0	24, 36, 48, 150
90.0	24, 36, 48, 150	90.0	36, 48, 150

NOTES:

1. Conduit bend shall have one bell end (same dimensions as Figure 1).
2. Except for angle and radius, all bends shall have same dimensions as corresponding straight conduit.
3. Straight portion shall be 2.5 inches for the 2" diameter conduit and 4.125 inches for the 4" diameter conduit to allow proper depth fit for a bell end.

SECTION 12:

STANDARD DUCT FORMATIONS AND WINDOW DETAIL
WITH END BELLS

Drawing #34028

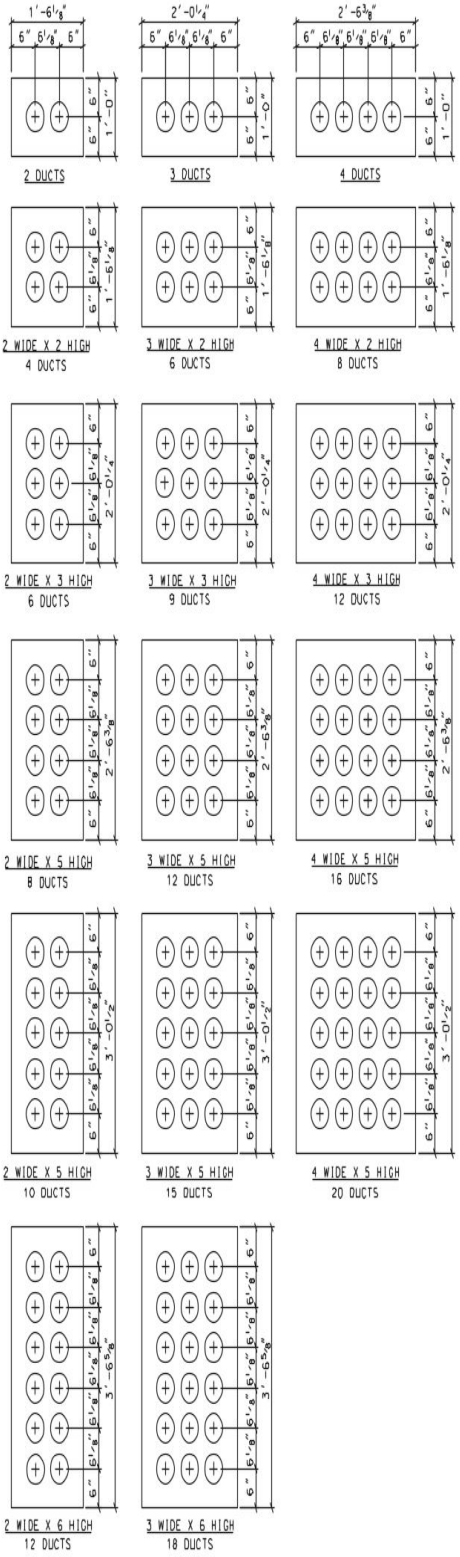

STANDARD DUCT FORMATIONS
SCALE: 1" = 1'-0"

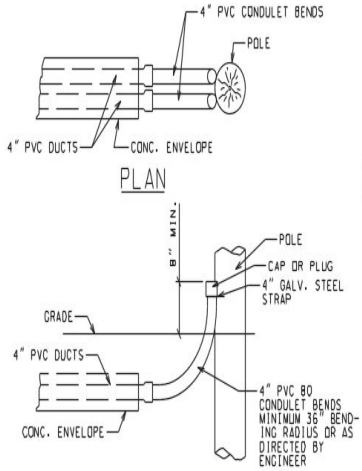

TYPICAL PVC CONDULET BEND INSTALLATION DETAILS
NOT TO SCALE

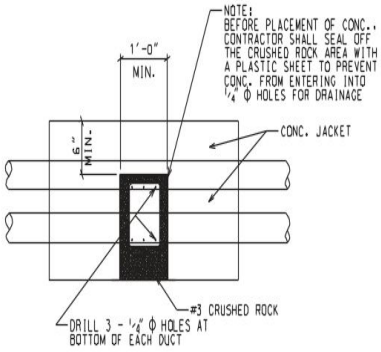

ELEVATION VIEW OF DUCT DRAIN VIEW
SCALE: 1" = 1'-0"

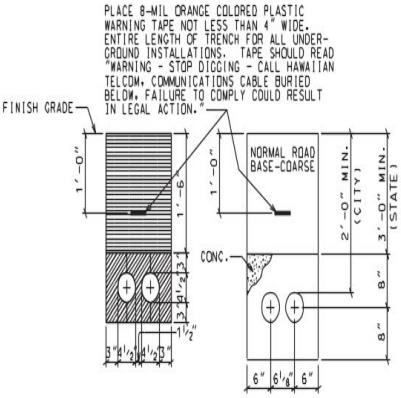

TYPICAL CROSS SECTION
SCALE: 1" = 1'-0"

NOTE:

TYPE "A" DIRT - SHALL BE BLACK OR BEACH SAND, OR EARTH AND GRAVEL. IF EARTH AND GRAVEL ARE USED, MAXIMUM ROCK SIZE SHALL BE 1" AND THE MIXTURE SHALL CONTAIN NOT MORE THAN 50% BY VOLUME OF ROCK PARTICLES.

TYPE "B" DIRT - SAME AS "A" EXCEPT THAT IF EARTH AND GRAVEL ARE USED, THE MIXTURE MUST PASS A 1/2" MESH SCREEN AND CONTAIN NOT MORE THAN 20% BY VOLUME OF ROCK PARTICLES.

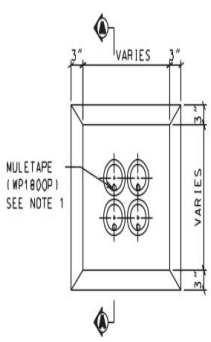

TYPICAL MANOHLE DUCT WINDOW
SCALE: 1" = 1'-0"

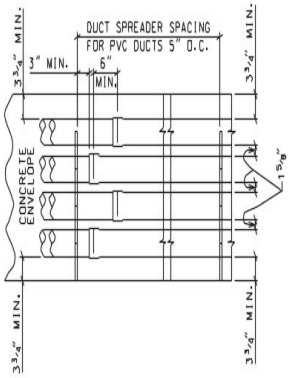

TYPICAL DUCT ENVELOPE ELEVATION ARRANGEMENT OF PLASTIC SPACERS
SCALE: 1" = 1'-0"

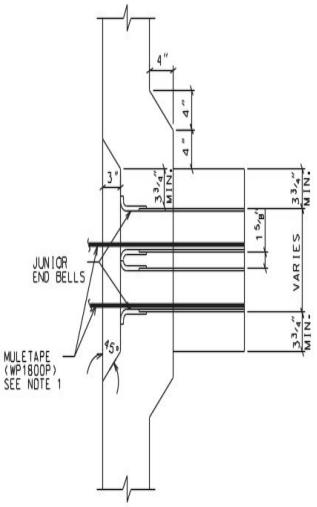

SECTION A-A TYPICAL WINDOW DETAIL & JUNIOR END BELL
SCALE: 1 1/2" = 1'-0"

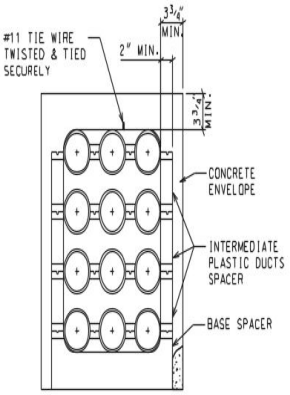

SECTION SHOWING INTERLOCKING SPACERS
SCALE: 1 1/2" = 1'-0"

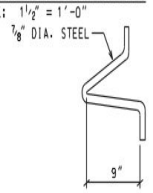

PULLING-IN IRON
NOT TO SCALE

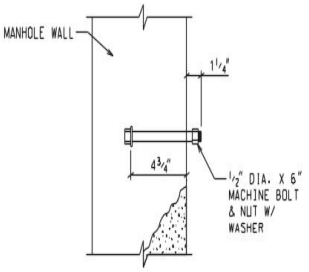

CABLE RACK STUD BOLT DETAIL
SCALE: 3" = 1'-0"

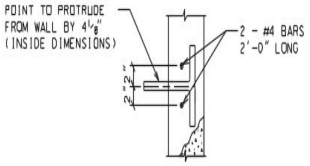

SECTION VIEW OF PULLING-IN IRON
SCALE: 1 1/2" = 1'-0"

NOTES:

1. THE CONTRACTOR SHALL PLACE MULETAPE (WP1800P) IN EACH DUCT. THROUGHOUT IT'S ENTIRE LENGTH WITH PROTRUSIONS OF 2 FEET IN MANHOLES & HANDHOLES AT EACH END AND 1 FOOT IN PULLBOXES. MULETAPE IS RATED FOR 1800# PULL AND HAS FOOTAGE MARKINGS FOR MEASURING DUCT LENGTHS.

WORK BAD/LT HIGH VOLTAGE	DESCRIPTION	JOB PREFILLED BY:	DATE PREFILLED:
POWER CO.	ENGINEER	PROPRIETARY INFORMATION FOR USE BY AUTHORIZED HT EMPLOYEES ONLY	
PHASE	MOMENTARY	CODES:	
CONNECTED	PLANNING	PIPELINE NO.	ENGINEER C. CHOY TEL 840-5822
CRUSHED		CP's AFFECTED YES NO	DRAWN BY C. TOM DATE 04/09/02
CONNECTS		SALES AFFECTED	APPROVED SHT 1 OF 1
			HAWAIIAN TELCOM, INC.

PROGRAM CODES: C.O.

PLANNING AREAS

SHT(S)

STANDARD DUCT FORMATIONS
MANHOLE DETAILS

34028

DRAWN BY: LC

CHECKED BY:

APPROVED BY: CALVIN CHOY

SCALE: NTS

DATE: 8-23-94

TITLE:

3-BOLT CLAMP ADAPTER DETAIL

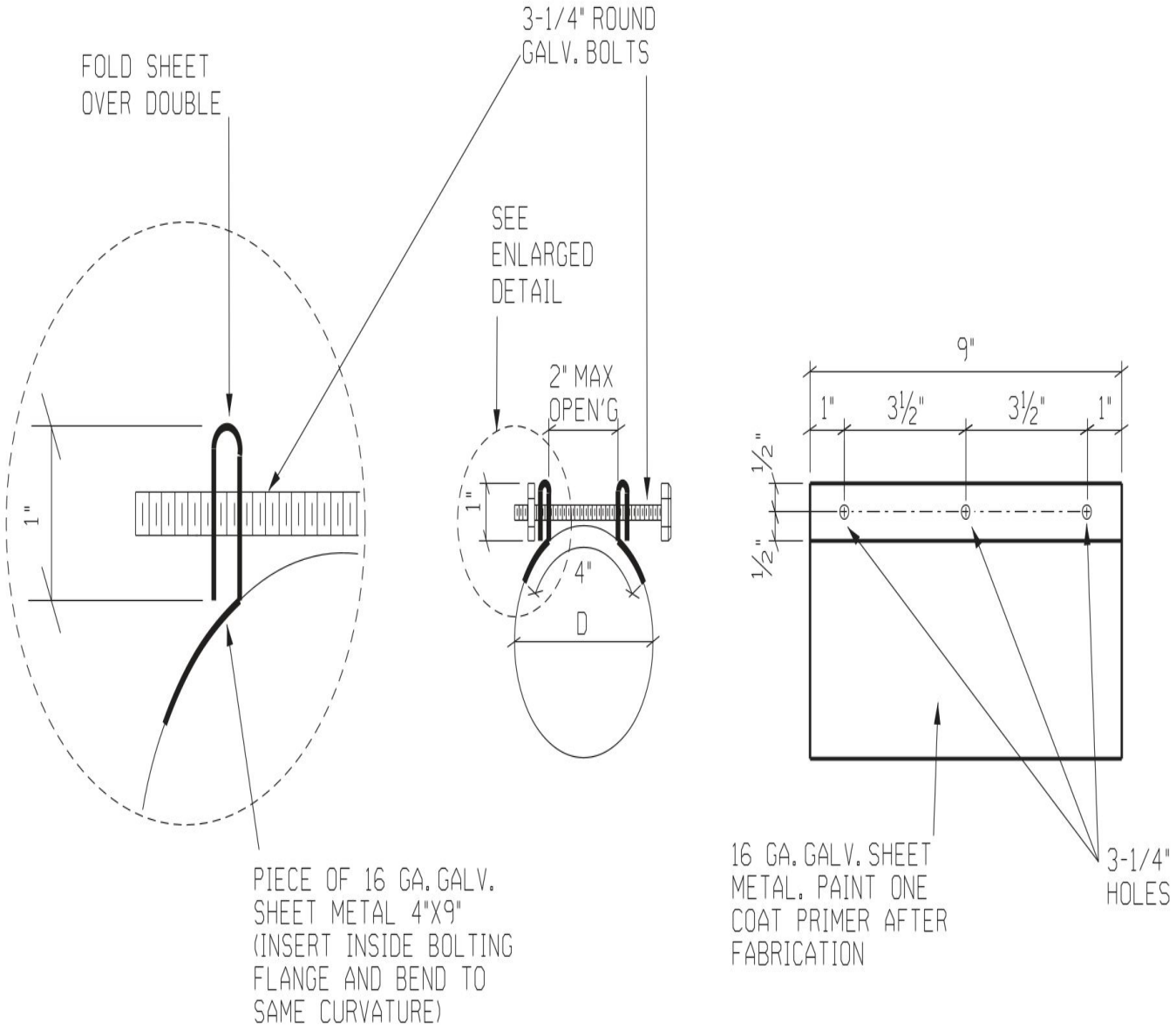

ELEVATION

DETAIL
(ENLARGED)
NTS

SECTION
3-BOLT CLAMP ADAPTER DETAIL
NTS

REV. NO.	BY	DATE
1		
2		
3		
4		
5		

DGN NO. 34028

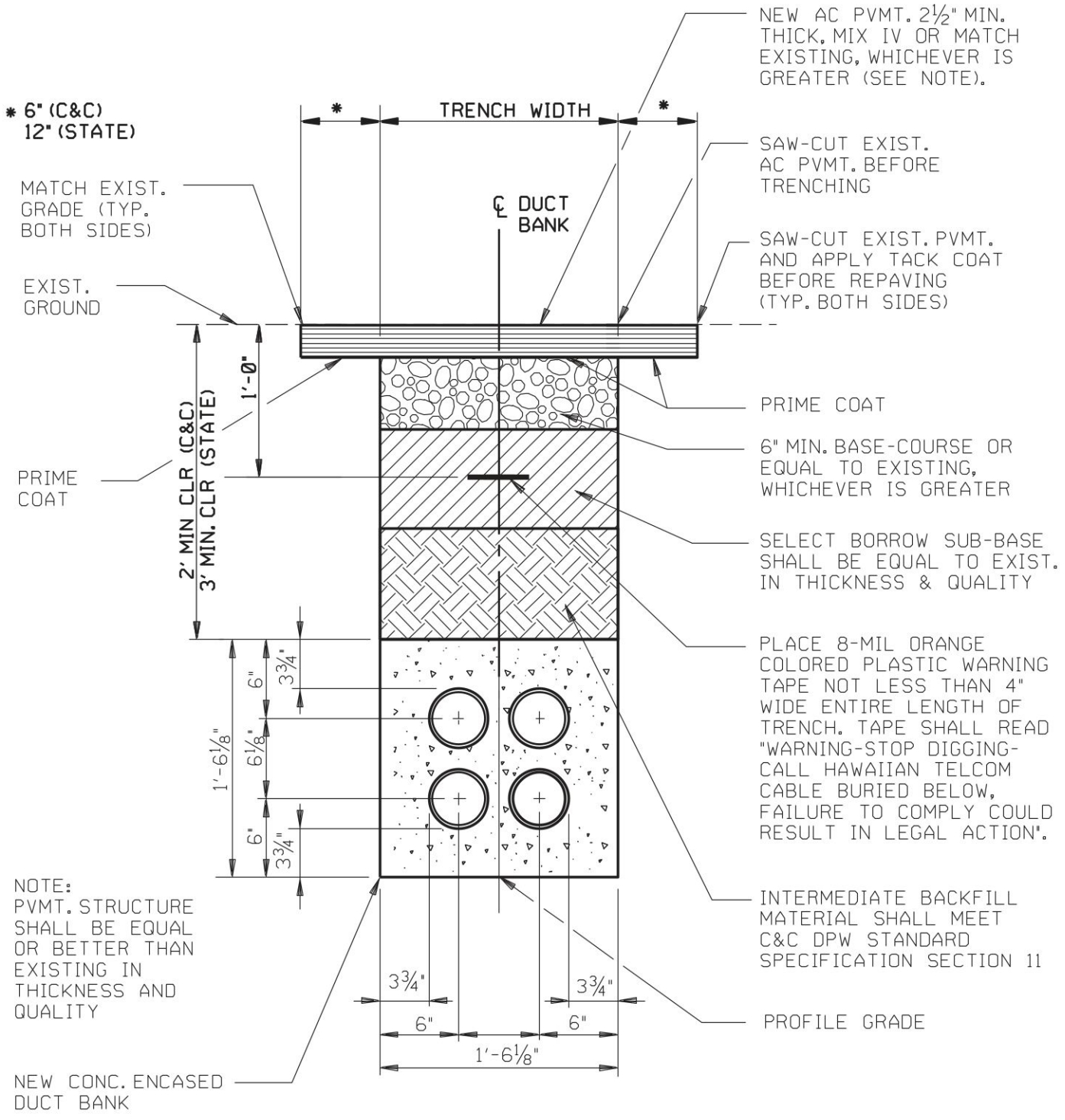

TYPICAL TRENCH DETAIL

SCALE: 1" = 1'-Ø"

DRAWN BY: ALMA	TITLE:	REV. NO. BY DATE
CHECKED BY:	TYPICAL TRENCH APPLICATION	1
APPROVED BY: CALVIN CHOY		2
SCALE: 1" = 1'-Ø"		3
DATE: 8-23-94		4
		5
		DGN NO. 34028

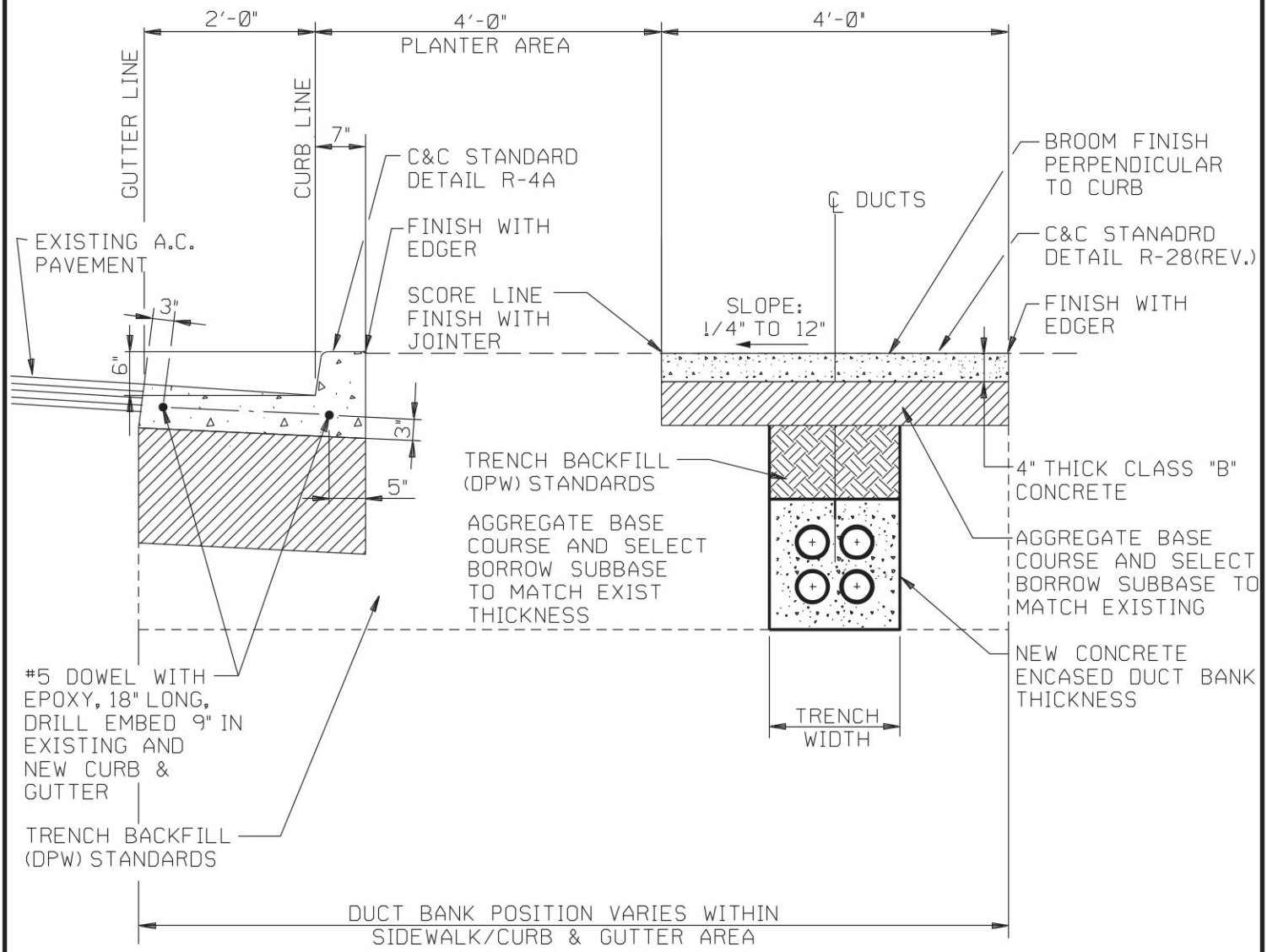

NOTE:

1. FOR SIDEWALK - SAWCUT AT JOINTS MIN. 6" BEYOND TRENCH WIDTH OR BOTH SIDES OF TRENCH.

2. FOR CURB/GUTTER - SAWCUT MIN. 6" BEYOND TRENCH WIDTH OR BOTH SIDES OF TRENCH PROVIDED SAWCUT MUST BE AT LEAST 4" FROM ANY SAWCUT OR JOINT.

SIDEWALK/CURB GUTTER RESTORATION DETAIL

SCALE: ½" = 1'-Ø"

DRAWN BY: ALMA	TITLE: SIDEWALK/CURB GUTTER RESTORATION DETAIL	REV. NO. / BY / DATE
CHECKED BY:		1
APPROVED BY: CALVIN CHOY		2
SCALE: ½" = 1'-Ø"		3
DATE: Ø8-23-94		4
		5
		DGN NO. 34028

SECTION 13:

STANDARD POLE ANCHORING REQUIREMENTS

DRAWING #34021

a. Standard Concrete Slug Anchoring Detail
b. Guy Anchor 18" Deadman
c. Guy Anchor 24" Deadman

TERMI-MESH DETAIL

POLE SETTING REQUIREMENTS

ANCHORING NOTES:

1. CONCRETE REQUIREMENT FOR DEADMAN IS 3000 PSI AT 28 DAYS READY-MIX.
2. USE NEW ROUND DEFORMED BARS ASTM A-305 FOR DEADMAN REINFORCEMENT AND TIE AT EACH INTERSECTION
3. THE 18" DEADMAN IS TO BE USED WITH THE '3/4" x 8'-0" ANCHOR ROD.
4. THE 24" DEADMAN IS TO BE USED WITH THE 1"-8'-0" AND 1 1/4" x 10'-0" ANCHOR RODS.
5. THE WORKING TENSION ULTIMATE (LBS) OF THE ANCHOR ROD-DEADMAN COMBINATION ARE AS FOLLOWS;

3/4" x 8'-0" STEEL	11,500#
3/4" x 8'-0" COPPERWELD	12,800#
1" x 8'-0" STEEL	18,000#
1" x 8'-0" COPPERWELD	22,500#
1 1/4" x 10'-0" STEEL	28,000#

6. SIZE OF THE ANCHOR ROD IS TO BE SPECIFIED BY THE ENGINEER ON THE JOB PLAN.
7. USE ANCHORING DATA TO STAKE OUT ANCHOR HOLES.

CAUTION : CITY AND COUNTY RESTRICTIONS REQUIRE THE ANCHOR EYE TO BE LOCATED AT A MINIMUM OF 3" FROM THE PROPERTY LINE.

FOR 35', 40', 45', 50', 55', 60', 65', & 70' POLES						
ANCHOR ROD AT GROUND LINE TO CL OF POLE "A"	ANCHOR ROD AT GRND LINE TO CL OF HOLE "B"		VERTICAL DEPTH "C"		TOTAL DISTANCE POLE TO HOLE "D" (A+B)	
	8' AR	10' AR	8' AR	10' AR	8' AR	10' AR
5' - 0"	1' - 0"	1' - 7"	7' - 4"	9' - 4"	6' - 0"	6' - 7"
10' - 0"	1' - 11"	3' - 0"	7' - 3"	9' - 0"	11' - 11"	13' - 0"
15' - 0"	2' - 8"	4' - 2"	7' - 1"	8' - 6"	17' - 8"	19' - 2"
20' - 0"	3' - 3"	5' - 3"	6' - 10"	7' - 11"	23' - 3"	25' - 3"
25' - 0"	3' - 10"	6' - 2"	6' - 7"	7' - 3"	28' - 10"	31' - 2"
30' - 0"	4' - 8"	7' - 0"	6' - 5"	6' - 9"	34' - 8"	37' - 0"
FOR 25' & 30' POLES						
5' - 0"	1' - 6"		7' - 1"	7' - 4"	6' - 8"	
10' - 0"	3' - 0"		6' - 7"	7' - 0"	13' - 0"	
15' - 0"	4' - 0"		6' - 1"	6' - 6"	19' - 0"	
20' - 0"	4' - 8"		5' - 6"	5' - 10"	24' - 8"	
25' - 0"	5' - 2"		4' - 11"	5' - 4"	30' - 2"	

DRAWN BY:	TITLE:	REV. NO. BY DATE
CHECKED BY:	STANDARD CONCRETE SLUG ANCHORING DETAIL	1 JC 07/28/97
APPROVED BY: CALVIN CHOY		2
SCALE:		3
DATE: 8-23-94		4
		5
		DGN NO. 34021

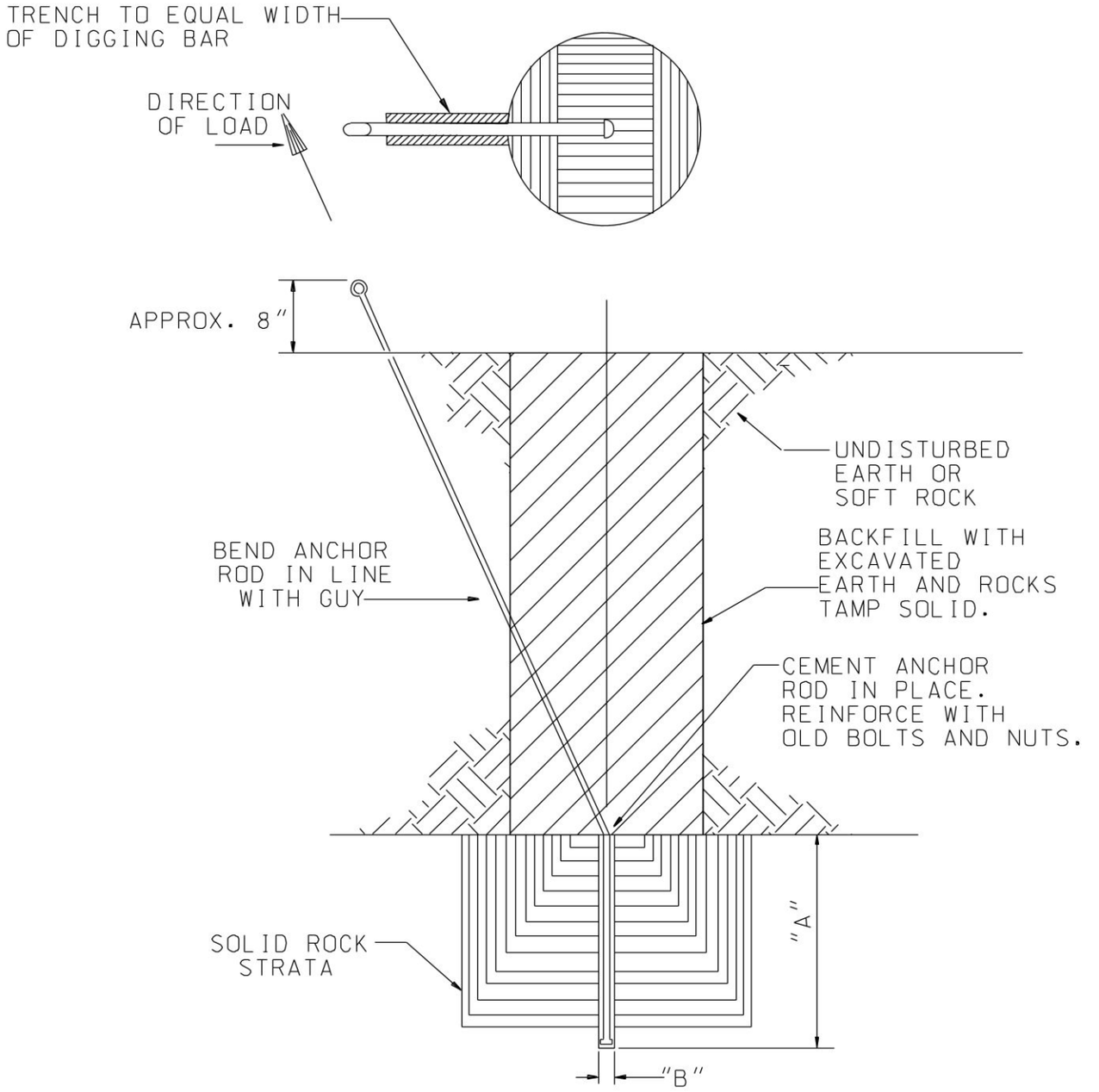

NOTES:

1. DIMENSION "A" SHOULD NOT BE LESS THAN 24", COMPLETE HOLE AND INSTALL AS PER ANCHOR DETAIL FOR 18" OR 24" DEADMAN.
2. DIMENSION 'B': DRILL 2" DIA. HOLE FOR $\frac{5}{8}$" AND $\frac{3}{4}$" ANCHOR RODS. DRILL $2\frac{1}{2}$" DIA. HOLE FOR 1" ANCHOR ROD AND 3" DIA. HOLE FOR $1\frac{1}{4}$" ANCHOR ROD.
3. FOR OPTIONAL ANCHOR ROD INSTALLATION IN SOLID ROCK, REFER TO GENERAL SYSTEM PRACTICE (21-810-704). EXPANDING ANCHOR DESCRIBED IN THE PRACTICE ARE LISTED IN HAWAIIAN TELCOM COMPANY'S CATALOG OF SUPPLIES AS STANDARD NON-STOCK ITEMS.

DRAWN BY:	TITLE:	REV. NO. / BY / DATE
CHECKED BY:	STANDARD CONCRETE SLUG ANCHORING DETAIL	1 / JC / 07/28/97
APPROVED BY: CALVIN CHOY		2
SCALE:		3
DATE: 8-23-94		4
		5
		DGN NO. 34021

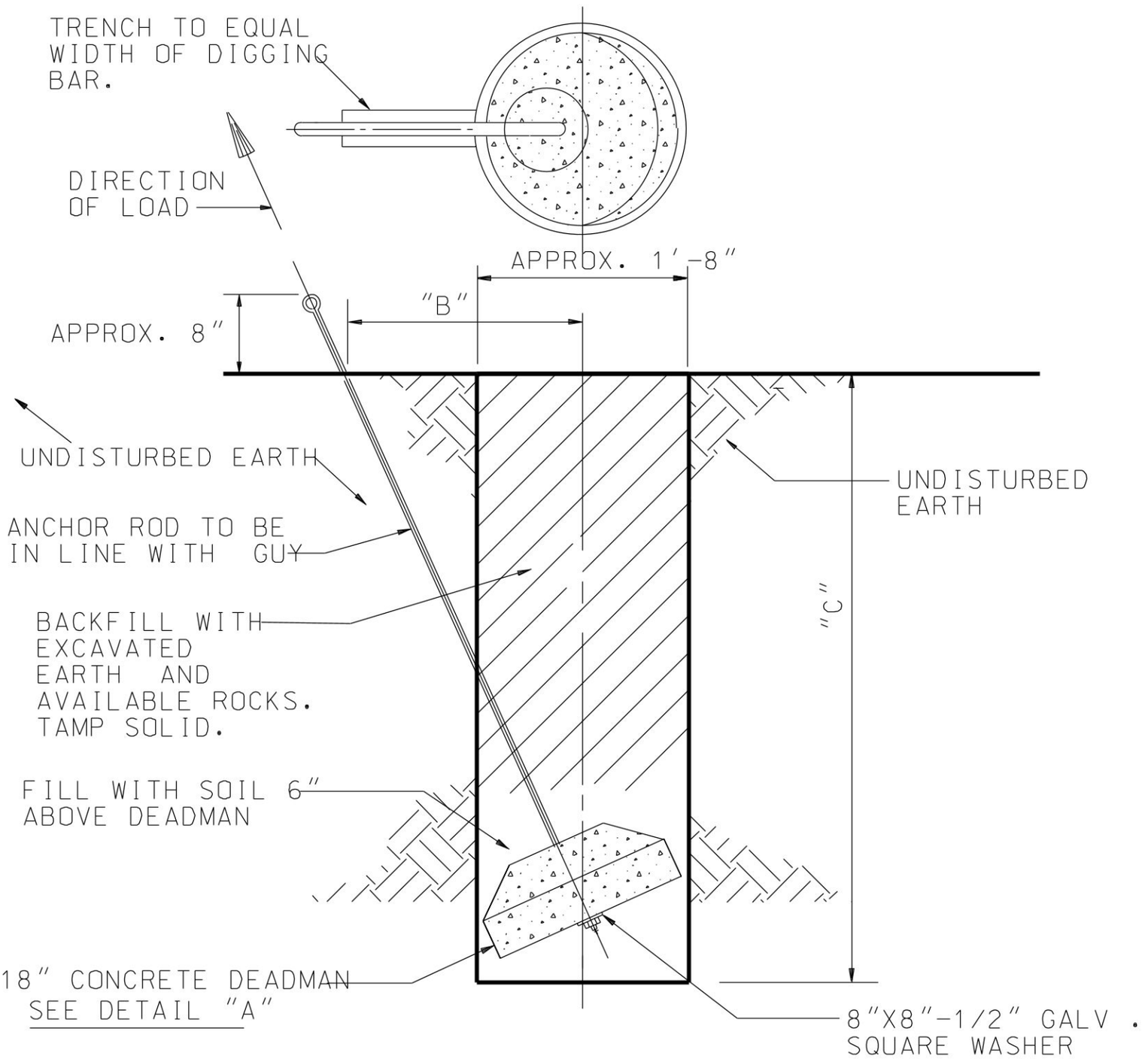

GUY ANCHOR 18" DEADMAN

DRAWN BY:	TITLE:	REV. NO. BY DATE
CHECKED BY:	STANDARD CONCRETE SLUG ANCHORING DETAIL	1
APPROVED BY: CALVIN CHOY		2
SCALE:		3
DATE: 8-23-94		4
		5
		DGN NO. SEC13-1

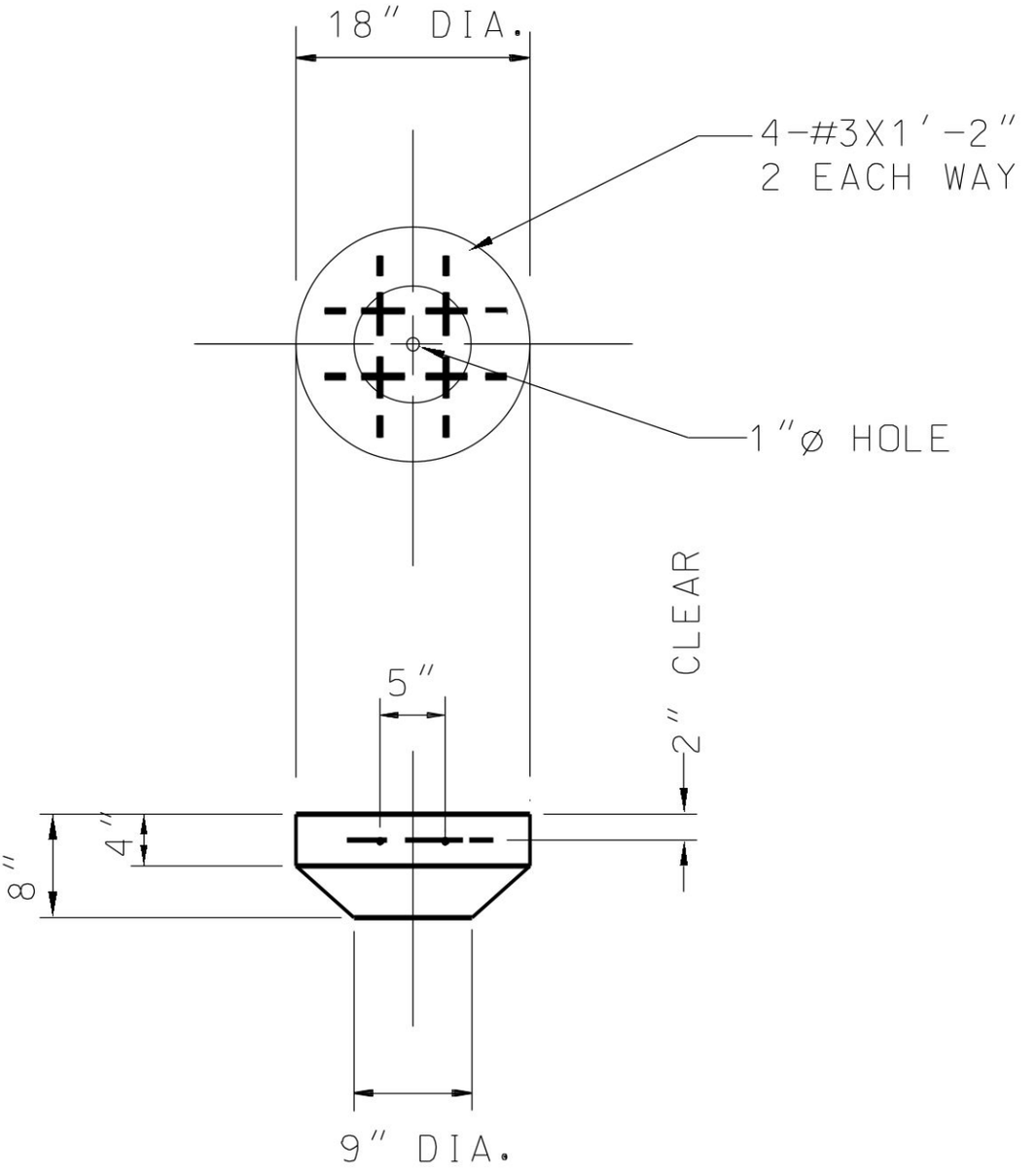

DETAIL "A"

DRAWN BY:	TITLE:	REV. NO. BY DATE
CHECKED BY:		1
APPROVED BY:	STANDARD CONCRETE SLUG ANCHORING DETAIL	2
SCALE: CALVIN CHOY		3
DATE: 8-23-94		4
		5
		DGN NO. SEC13-2

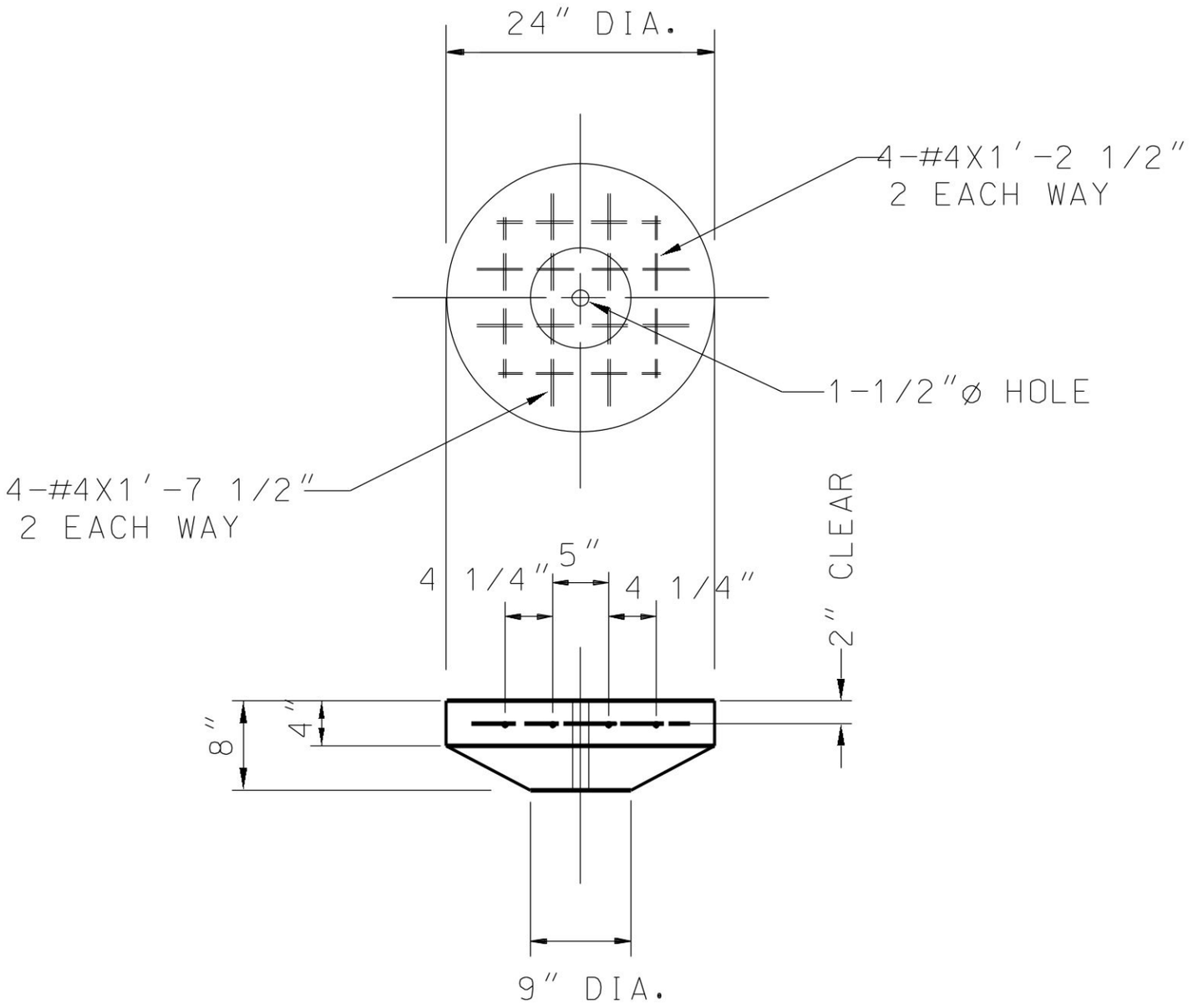

DETAIL "B"

DRAWN BY:	TITLE:	REV. NO. BY DATE
CHECKED BY:	STANDARD CONCRETE SLUG ANCHORING DETAIL	1
APPROVED BY: CALVIN CHOY		2
SCALE:		3
DATE: 8-23-94		4
		5
		DGN NO. SEC13-3

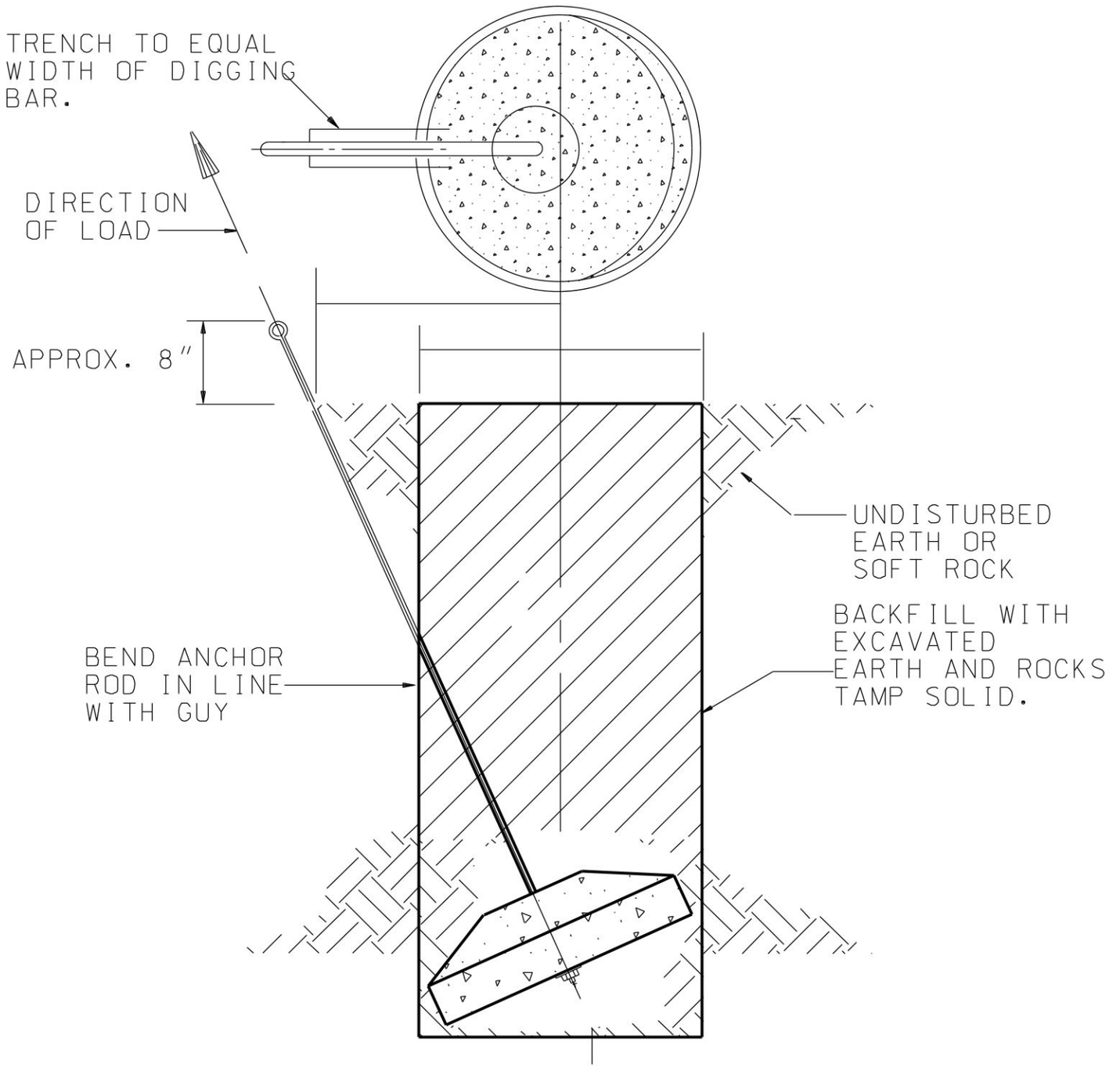

GUY ANCHOR 24″ DEADMAN

DRAWN BY:	TITLE:	REV. NO. BY DATE
CHECKED BY:		1
APPROVED BY: CALVIN CHOY	STANDARD CONCRETE SLUG ANCHORING DETAIL	2
SCALE:		3
DATE: 8-23-94		4
		5
		DGN NO. SEC13-4

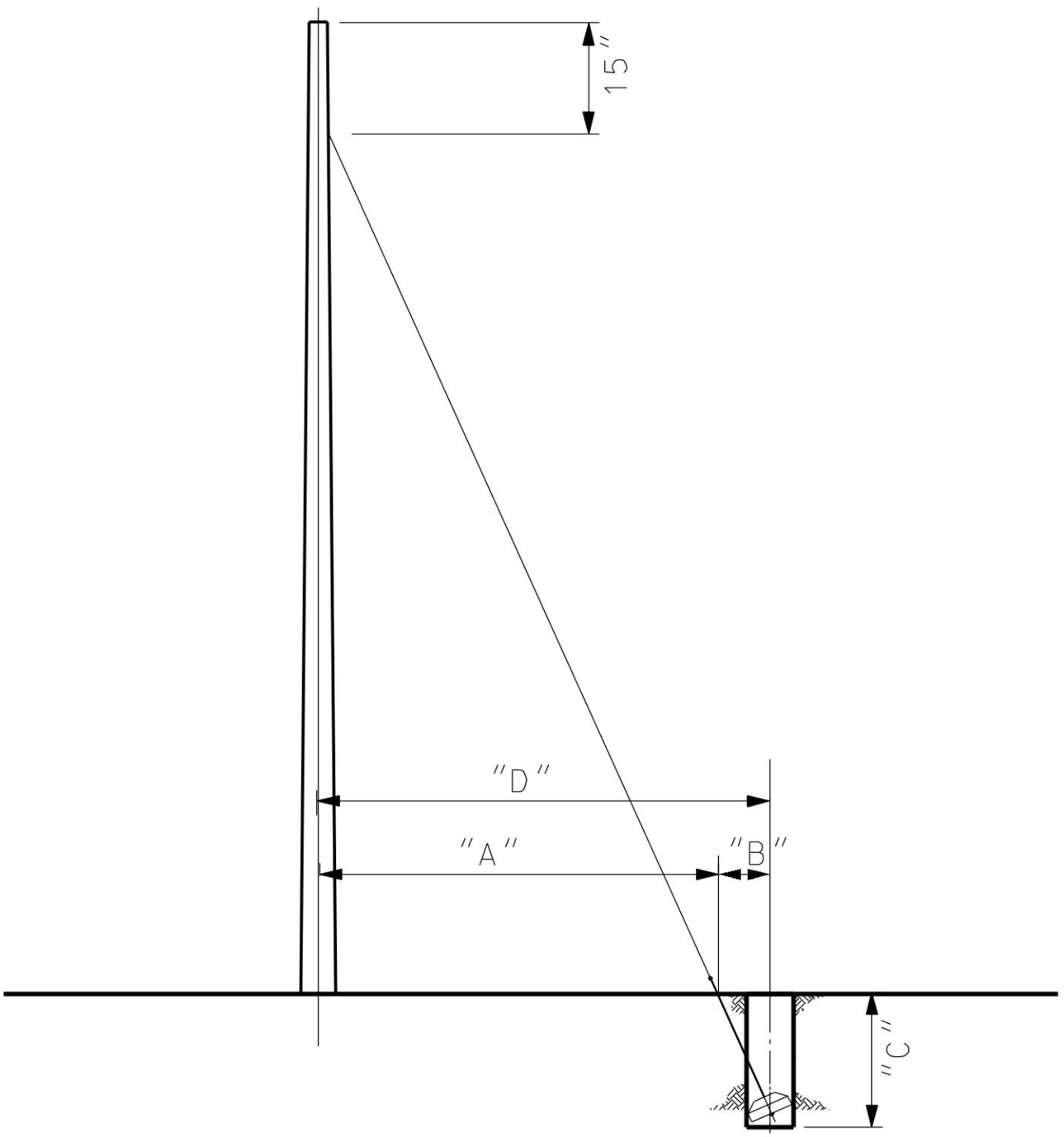

NOT TO SCALE

DRAWN BY:	TITLE:	REV. NO. BY DATE
CHECKED BY:		1
APPROVED BY: CALVIN CHOY	STANDARD CONCRETE SLUG ANCHORING DETAIL	2
SCALE:		3
DATE: 8-23-94		4
		5
		DGN NO. SEC13-5

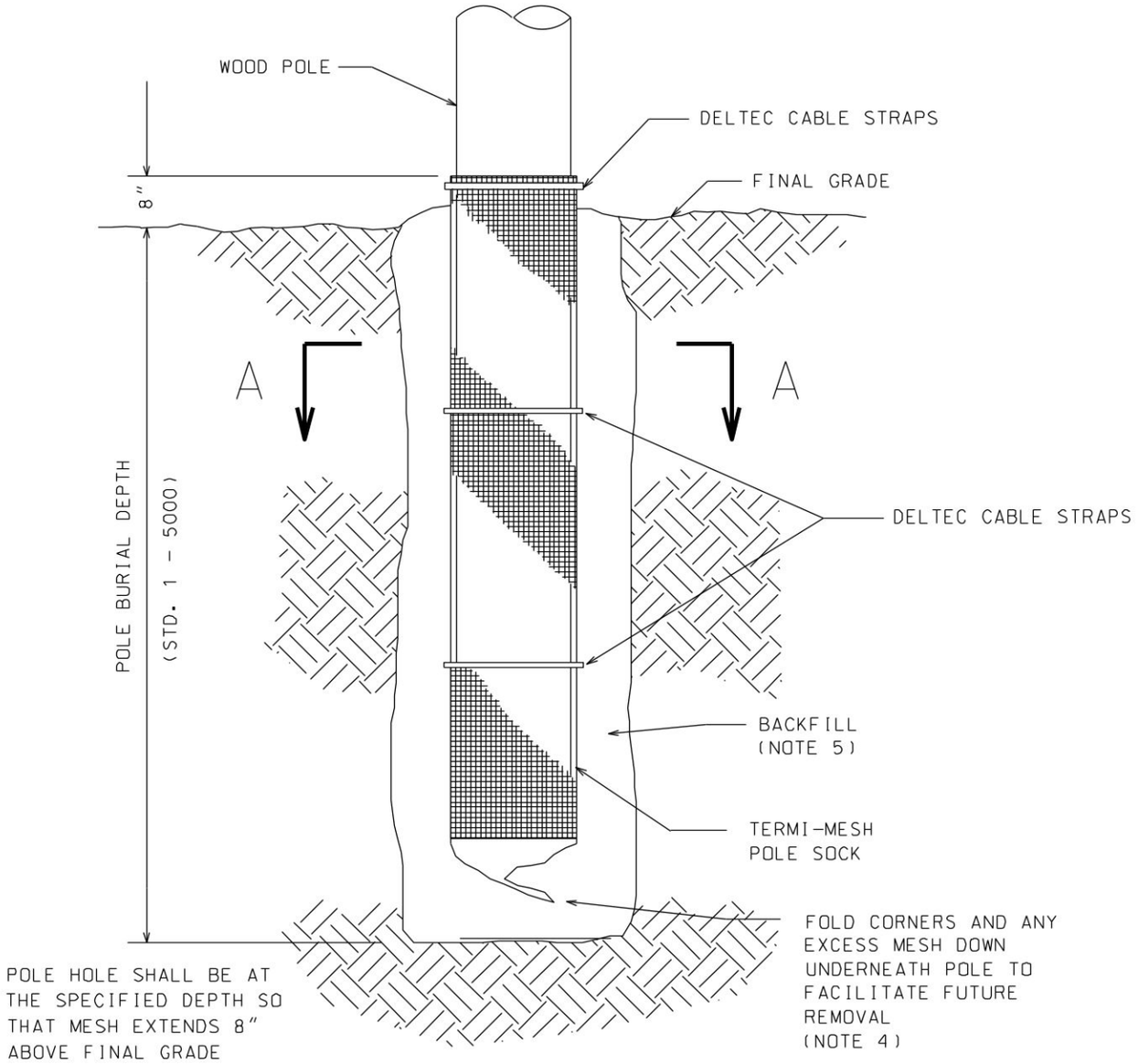

TYPICAL BARRIER INSTALLATION

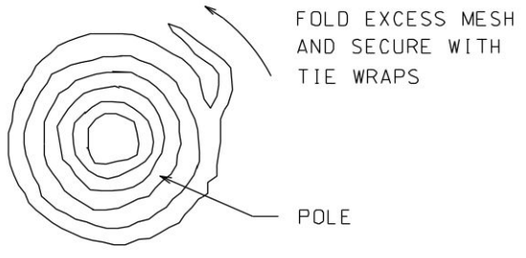

SECTION A-A

DRAWN BY: JC	TERMI-MESH TERMITE BARRIER FOR WOOD POLES		REV. NO. BY DATE
CHECKED BY:			1
APPROVED BY: CALVIN CHOY			2
SCALE: NOT TO SCALE			3
DATE: 06/24/97	HAWAIIAN TELCOM	DGN NO.SEC13-6	4

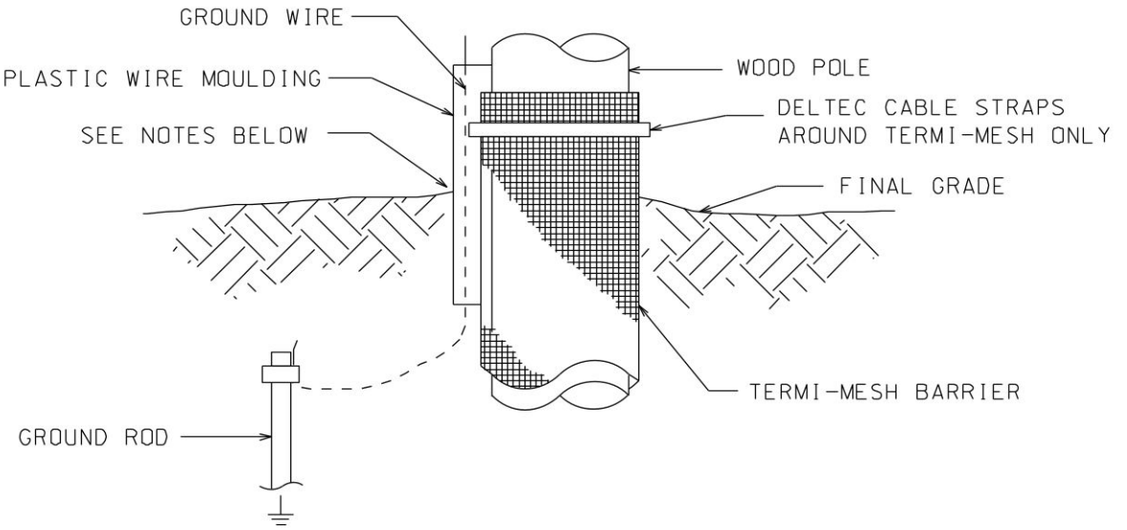

GROUND WIRE DETAIL

NOTES:

1. GROUND WIRE AND PLASTIC MOULDING SHALL BE PLACED ON THE OUTSIDE OF THE TERMI-MESH BARRIER. THERE SHALL BE NO PENETRATIONS IN THE MESH.
2. USE EXTREME CAUTION WHEN INSTALLING GROUND RODS NEAR THE TERMI-MESH BARRIER SO THAT THE MESH IS NOT PENETRATED OR DAMAGED.
3. DO NOT USE WOOD WIRE MOULDING.

INSTALLATION NOTES:

1. THE TERMI-MESH SYSTEM FORMS A PHYSICAL BARRIER THAT SHEILDS OUT TERMITES. CORRECT INSTALLATION IS ESSENTIAL TO ACHIEVE AN EFFECTIVE BARRIER. IF THERE IS ANY DAMAGE TO THE SYSTEM, IMMEDIATELY CONTACT TERMI-MESH HAWAII.
2. POLES WHICH WILL BE PLACED IN THE GROUND CAN BE PROTECTED FROM SUBTERRANEAN TERMITES WITH A SOCK OF MESH. IT IS NECESSARY TO HAVE THE SOCK TIGHTLY FITTED TO THE POLE. THIS INSTALLATION RESTRICTS THE TERMITES FROM DIRECTLY ATTACKING THE POLE OR FROM ENTERING THE POLE VIA CHECKS IN THE WOOD.
3. TERMITE RESISTANT MESH IS FORMED INTO A CONTINUOUS SOCK WHICH IS PULLED OVER THE END OF THE POLE WHICH IS TO BE SET INTO THE GROUND. THE EDGES OF THE MESH ARE JOINED AT THE SIDE AND AT THE BOTTOM OF THE SOCK BY A TRIPLE FOLD JOINT. THE MESH SHOULD EXTEND ABOVE THE FINAL GRADE TO A LEVEL OF AT LEAST 8 INCHES.
4. THE SOCK SHOULD BE FOLDED AND BANDED AS SHOWN ON THE DRAWING WITH THE EXCESS LENGTH STORED AT THE BOTTOM OF POLE. THIS WILL FACILITATE EASY REMOVAL OF THE POLE IN THE FUTURE. PLASTIC BANDS OR TIE WRAPS WILL BE UTILIZED BELOW GRADE AND DELTEC CABLE STRAPS WILL BE USED ABOVE GRADE TO SECURE THE SOCK TO THE POLE.
5. THERE SHOULD BE NO ROCKS OR OTHER OBJECTS IN THE BACKFILL THAT MAY DAMAGE THE MESH. CAUTION SHALL BE TAKEN SO THAT THE MESH IS NOT DAMAGED WHEN INSTALLING RISER CONDUITS AND GROUND RODS.

DRAWN BY: JC	TERMI-MESH TERMITE BARRIER FOR WOOD POLES		REV. NO. BY DATE
CHECKED BY:			1
APPROVED BY: CALVIN CHOY			2
SCALE: NOT TO SCALE			3
DATE: 06/24/97	HAWAIIAN TELCOM	DGN NO.SEC13-7	4

POLE SETTING REQUIREMENTS

Hole Digging

1. Holes should be of such size to permit free entrance of the pole with sufficient margin to permit tamping throughout the entire depth. Make the holes of uniform diameter from top to bottom.

2. On level ground the pole holes should be dug to the depths given in Table 1, except that the holes for unguyed stubs and corner poles should be set 6 inches deeper.

3. Where solid rock is encountered at various depths below the ground level, set poles to the minimum depths shown in Table 2.

4. When soil conditions are such that ground bracing or ground footings are necessary to properly support the poles, the holes must be sufficiently large to easily install the fixtures.

Table 1, Pole Hole Depths, Level Ground

Length of Pole in Feet	Depth of Hole in Earth (feet)	Depth of Hole in Rock (feet)
20	4	3
25	5	3
30	5	3
35	5 1/2	3 1/2
40	6	4
45	6 1/2	4 1/2
50	7	4 1/2
55	7 1/2	5
60	8	5
65	8 1/2	6
70	9	6
75	9 1/2	6
80	10	7

Table 2, Pole Hole Depths, Subsurface Rock.

Depth Below Ground At Which Rock is Encountered	Minimum Total Depth of Setting							
	25' Pole	30' Pole	35' Pole	40' Pole	45' Pole	50' Pole	55' Pole	60' Pole
0'-0"	3'-0"	3'-0"	3'-6"	4'-0"	4'-6"	4'-6"	5'-0"	5'-0"
0'-6"	3'-6"	3'-6"	3'-11"	4'-3"	4'-8"	4'-10"	5'-2"	5'-4"
1'-0"	3'-10"	3'-10"	4'-2"	4'-6"	4'-10"	5'-1"	5'-5"	5'-8"
1'-6"	4'-2"	4'-2"	4'-5"	4'-9"	5'-1"	5'-4"	5'-8"	5'-11"
2'-0"	4'-5"	4'-6"	4'-8"	5'-1"	5'-5"	5'-9"	6'-0"	6'-4"
2'-6"	4'-8"	4'-10"	5'-0"	5'-4"	5'-8"	6'-0"	6'-4"	6'-8"
3'-0"	4'-10"	5'-0"	5'-2"	5'-7"	5'-11"	6'-4"	6'-8"	7'-0"
3'-6"	4'-11"	5'-2"	5'-4"	5'-9"	6'-1"	6'-7"	6'-11"	7'-3"
4'-0"	5'-0"	5'-4"	5'-5"	5'-11"	6'-4"	6'-9"	7'-1"	7'-6"
4'-6"	5'-0"	5'-6"	5'-6"	6'-0"	6'-5"	6'-10"	7'-3"	7'-8"
5'-0"	5'-0"	5'-6"	5'-6"	6'-0"	6'-6"	7'-0"	7'-5"	7'-10"
5'-6"				6'-0"	6'-6"	7'-0"	7'-6"	7'-11"
6'-0"				6'-0"	6'-6"	7'-0"	7'-6"	8'-0"
6'-6"					6'-6"	7'-0"	7'-6"	8'-0"
7'-0"						7'-0"	7'-6'	8'-0"
7'-6"							7'-6"	8'-0"
8'-0"								8'-0"

SECTION 14:

STANDARD ELECTRICAL GROUNDING DETAILS

Cable Bonding and Grounding
Underground Cable in Maintenance Holes

CONTENTS

SUBJECT		PAGE
1. General		**2**
1.1	Purpose	2
1.2	Filing Instructions	2
1.3	Reason for Reissuing	2
1.4	Supercedures	2
1.5	Copyright and Responsibility	2
1.6	Disclaimer	2
2. Overview		**3**
2.1	Related Practices	3
2.2	Acronyms/Terms and Definitions	3
3. Underground Cable Facilities Bonding and Grounding Policy		**4**
3.1	Fiber Optic Cable with Metallic Shield	4
3.2	Metallic Cable (Copper)	5
3.3	Maintenance Holes, Handholes and Pull Boxes	5
3.4	Missing Grounds	5
3.5	Precast Maintenance Holes	5
3.6	Site-Poured Maintenance Holes	5
3.7	Bonding	6
3.8	Metallic Conduit	6
3.9	Measured Ground Requirements	7
4. Installing Ground Rods In Maintenance Holes		**8**
4.1	Precast Maintenance Holes	8
4.2	Ground Rods	9
5. Installing Bonding Ribbon/Wire Clamps in Maintenance Holes		**11**
5.1	Installing Ribbon/Wire Clamps	11
5.2	Attaching Bonding Ribbon/Wire to Iron Work	13
5.3	Attaching Bonding Ribbon/Wire to Ground Rod	13
5.4	Connecting Bonding Ribbon/Wires	14
6. Attaching Bond to Cable		**14**
6.1	Lead Sheath Cable	14
6.2	Stalpeth Cable	15
6.3	Alpeth and FPA Cable	15
6.4	Fiber Optic Cable with a Closure	16
6.5	Metallic Splice Closure	16
7. Bonding to a Main Lead Sleeve or an Auxiliary Sleeve		**17**
7.1	Bonding Procedure	17

1. General

1.1 Purpose

This practice provides information and procedures for:

- Bonding and grounding requirements in the underground cable network.
- Placing bonds in maintenance holes.
- Bonding either lead or polyethylene cable sheath to maintenance hole bonds.
- Placing ground rods within the maintenance hole.

1.2 Filing Instruction

Discard all previous issues and associated addends of this practice and file this issue numerically in your **HAWAIIAN TELCOM** Operations practices set.

1.3 Reason for Reissuing

This practice has been reissued to incorporate multiple changes in the content. Read this entire practice to ensure your familiarity with the new information.

1.4 Supersedure

This practice supersedes:

- All local practices, procedures, general instructions, letters, and memoranda which address this subject.
- Any document which provides information contrary to the information contained in this practice.
- 605-100-202, Issue 5; Cable Bonding and Grounding – Installing Lead and Polyethylene Sheath Cable in Access Points.
- 605-100-202NI, Cable Bonding and Grounding – Underground Cable in Maintenance Holes.

1.5 Copyright and Responsibility

This practice was published by the **HAWAIIAN TELCOM** Administrative Services Department. For more information about this practice contact the Headquarters Outside Plant Construction Support Staff.

No part of this work may be reproduced or copied in any form or by any means – graphic, electronic, or mechanical, including photocopying, recording, taping, or information storage and retrieval systems – without the written permission of the Administrative Services Department, **HAWAIIAN TELCOM** Telephone Operations Headquarters, Irving, Texas.

1.6 Disclaimer

This practice was prepared solely for the use of **HAWAIIAN TELCOM** Telephone Operations. It must be used only by its employees, contractors, customers and end users, when installing, operating, maintaining, and repairing **HAWAIIAN TELCOM** Telephone Operations' equipment, facilities and services. Any other use of this practice is forbidden. The information contained in this practice may not be applicable in all circumstances and is subject to change without notice. By using this practice the user agrees that **HAWAIIAN TELCOM** Telephone Operations will have no liability (to the extent permitted by applicable law) for any consequential, incidental, special, or punitive damages that may result.

2. Overview

2.1 Related Practices

Refer to the following chart to find additional information related to this subject.

For Information about…	Consult Practice…
Protection – Bonding and Grounding Cable	903-101-070
Protection – General Considerations	903-020-070
Bonding and Grounding - Cable Entering Central Office	605-100-201
Bonding and Grounding - Aerial Cable Facilities	605-100-203
Bonding and Grounding - Buried Cable Facilities	605-100-204
Symbols and Definitions	018-000-001 *To* 018-000-008
Precast Maintenance Holes	622-501-200
Conduit and Maintenance Hole Construction	622 Series
Remote Electronic Serving Area Grounding Systems – Engineering Considerations	795-805-075

2.2 Acronyms/ Terms and Definitions

The following chart provides definitions for acronyms and terms used in this practice.

Acronym or Term	Definition
Ground Point	A point in the cable facilities that includes any type of earth ground. Ground attachments must be made according to the following prioritized list of preferred grounds: 1. Power company's MGN. 2. Permanent metallic structure. 3. Metallic water pipe. Note: The entire water system must be constructed of metallic pipe and buried in contact with soil for at least 20 feet. 4. Ground rods.

(continued)

2. Overview, continued

2.2 Acronyms/ Terms and Definitions, continued

Acronym or Term	Definition
Handhole	Type of underground box which allows access to underground cable facilities.
Iron Work	All metal hardware contained within the maintenance hole, such as: • Cable racks. • Supports.
Maintenance Hole	Type of underground structure which allows access to underground cable facilities. This Includes maintenance holes that are: • Poured. • Precast.
Measured Ground Or Meggered Ground	A ground point in the cable facilities which is designated by engineering to be measured for resistance between the cable facilities and earth.
MGS	Multi-Grounded System. A network which includes frequent grounding of cable strand/shield with ground electrodes. The objective of MGS is to place sufficient low impedance ground electrodes on the cable that, when measured, will give a system resistance to earth less than 12 ohms at each point.
MXU	Multiplexer Unit.
OGR	Objective Ground Reading
Pull Boxes	Type of underground box which allows access to underground cable facilities.

3. Underground Cable Facilities Bonding and Grounding Procedures

3.1 Fiber Optic Cable with Metallic Shield

The bonding and grounding policy for fiber optic cable with a metallic shield is to bond the shield to ground at each splice point.

3. Underground Cable Facilities Bonding and Grounding Procedures, continued

3.2 Metallic Cable (Copper)

The bonding and grounding policy for metallic cable (copper) is to:

- Bond the shield to ground at a maximum distance of 2000-foot intervals between ground points.
- Ensure that no point in a metallic cable is farther than 1000 feet from a ground point.

3.3 Maintenance Holes, Handholes, and Pull Boxes

All existing maintenance holes, handholes and pull boxes must:

- Have a source to ground, according to those guidelines listed below in 3.4, Missing Grounds.

  AND

- Be bonded using a No. 6AWG bonding ribbon or wire.

3.4 Missing Grounds

Provided that no point on the cable is more than 1000 feet from a ground point, missing grounds need not be added to existing maintenance holes, handholes or pull boxes until they are entered for:

- Repair.
- Changes.
- Additions.

That is, if the 1000-foot maximum exists, a work order specifically for placing grounds is not necessary. However, when the maintenance hole, handhole, or pull box, which does not meet this criterion, is entered for other reasons, a ground should be placed.

3.5 Precast Maintenance Holes

Precast maintenance holes require no additional grounding hardware (ground rods) placed when they have their:

- Reinforcing steel bonded together.

  AND

- Provide a bonding attachment (tinned bonding ribbon).

Note: Engineering must review the manufacturer's specifications of the precast maintenance hole to ensure that bonding of the reinforcement bars and tinned bonding ribbon are provided.

3.6 Site-Poured Maintenance Holes

Site-poured maintenance holes with bonded reinforcing steel provide an adequate ground system and does not require the addition of a company placed ground rod. Refer to the HAWAIIAN TELCOM Telephone Operations Practice 622-501-200 for additional information.

3. Underground Cable Facilities Bonding and Grounding Procedures, continued

3.7 Bonding

In every maintenance hole the following must be bonded together and bonded to the bonding ribbon/wire:

- Shields of underground lead/polyethylene-sheath cable.

EXCEPTION: Bonds may be omitted on polyethylene sheath cable and air pipe at intermediate maintenance holes where no opening is made in the polyethylene jacket provided the intermediate point is no more than 1000 feet from a bond/ground point.

- Iron work.
- Metal closures.
- Air pipe fittings.
- Apparatus cases.

The owners of foreign cables must give permission prior to their placement in HAWAIIAN TELCOM maintenance holes for them to be bonded to the communication cables.

The shield/armor of customer entrance facilities must be bonded to the :

- Main cable shield
- Ground bonding ribbon/wire.

3.8 Metallic Conduit

When placing new or replacing existing conduit, use of metallic conduit should be avoided if possible.

When…	Then…
Metallic conduit is placed under: • Railroad tracks • Federal highways, etc.	Attach insulated #6 tinned copper ground wire to: • Each end of the metallic conduit. • Both ends of the cable shield. **CAUTION: To reduce the possibility of corrosion that can occur because of galvanic action, insulated #6 tinned copper ground wire must be used between all metallic conduit and the:** • **Cable shield.** • **Splice case.** • **Lead Sleeve.** • **Aerial strand.**

(continued)

3. Underground Cable Facilities Bonding and Grounding Procedures, continued

3.8 Metallic Conduit, continued

When…	Then…
Polyethylene Cable is used	To avoid removing the polyethylene jacket for the sole purpose of obtaining a shield bond. The #6 Tinned copper wire can be run: • From each end of the metallic conduit to the nearest splice case/lead sleeve, if within 75 feet. OR • To the aerial strand on each side of the conduit. CAUTION:

3.9 Measured Ground Requirements

Measured grounds are required at all:

- Repeater housings.
- Locations where cable branches off the main cable are more than 1000 feet in length.
- Locations where a cable ends.
- Major distribution sites (MXU, pair gain, etc.). (Refer to HAWAIIAN TELCOM Telephone Operations Practice 795-805-075.)

Measured resistance readings taken at measured ground points are to meet the 10 ohms or less required for the Multi-Grounded System (MGS) or the Objective Ground Reading (OGR).

Resistance measurements taken at measured ground points must be taken with all bonds connected to ground. The resistance reading taken includes the:

- Cable shield network.
- Grounding at the measured ground location.

NOTE: For Fiber Optic Cable…
The measured ground requirements apply in those situations where shielded fiber optic cable is placed or in locations where MGN or power secondary neutral grounds are not available. This practice does <u>not</u> require that a sheath opening be created for the sole purpose of obtaining a measured ground in fiber optic cable. All measured ground locations must correspond with engineered grounding locations.

4. Installing Ground Rods in Maintenance Holes

4.1 Precast Maintenance Holes

Precast maintenance holes which have their reinforcing steel bonded together and bonded to the maintenance hole hardware, as illustrated below.

- Provide an adequate grounding system.
- Do not require the placement of an additional ground rod for grounding

All precast maintenance holes having bonding ribbon in each section must have both the top and bottom halves of the structure bonded together.

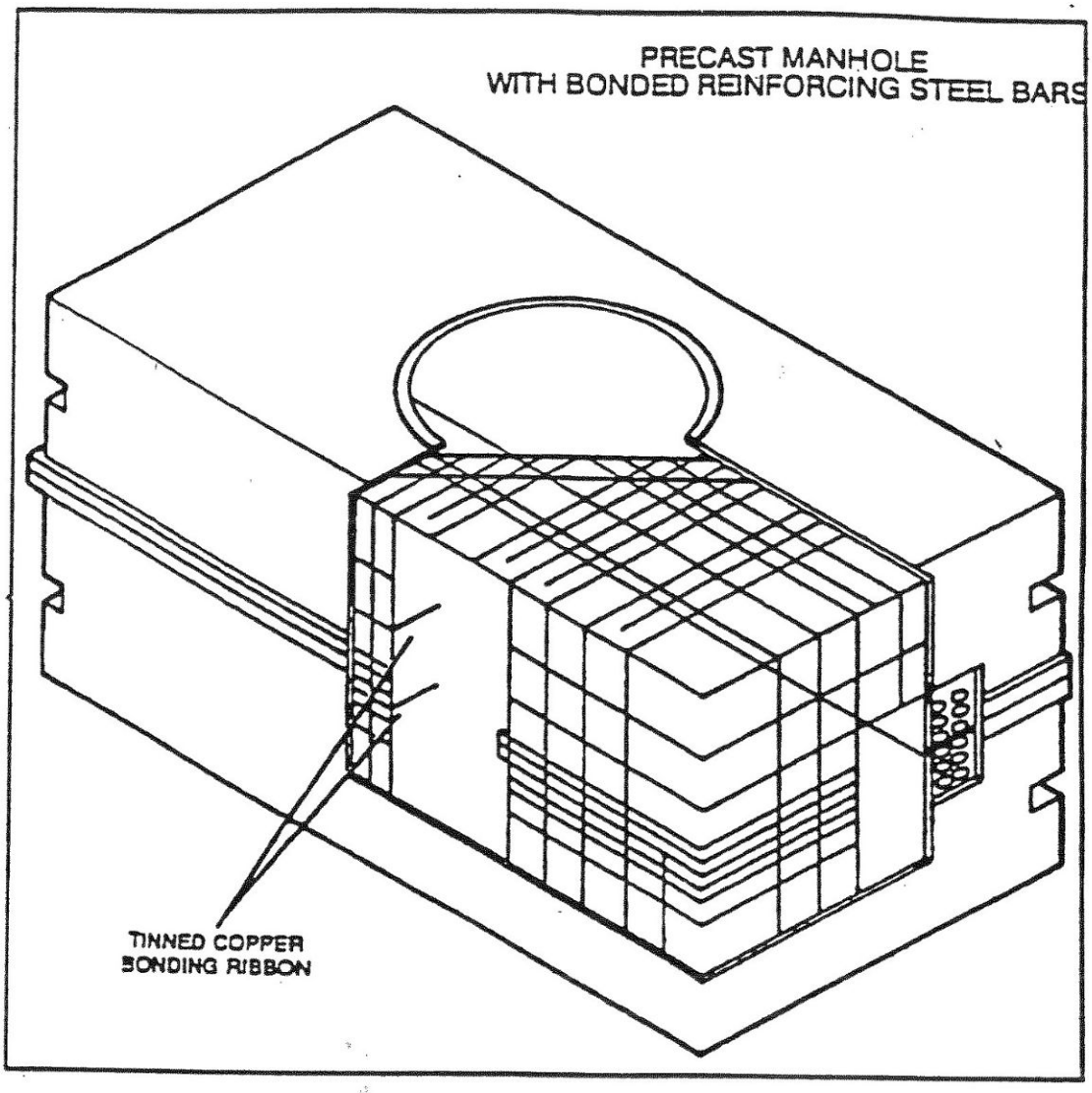

4. Installing Ground Rods in Maintenance Holes, continued

4.2 Ground Rods

The design and placement of a ground rod within a maintenance hole requires that the ground rod must be placed as close to the outer wall as feasible.

Caution: Placement of the ground rod to the outer wall is very important for safety reasons. This allows personnel to work within the confines of the maintenance hole without stepping on or tripping over the exposed part of the ground rod or grounding connectors.

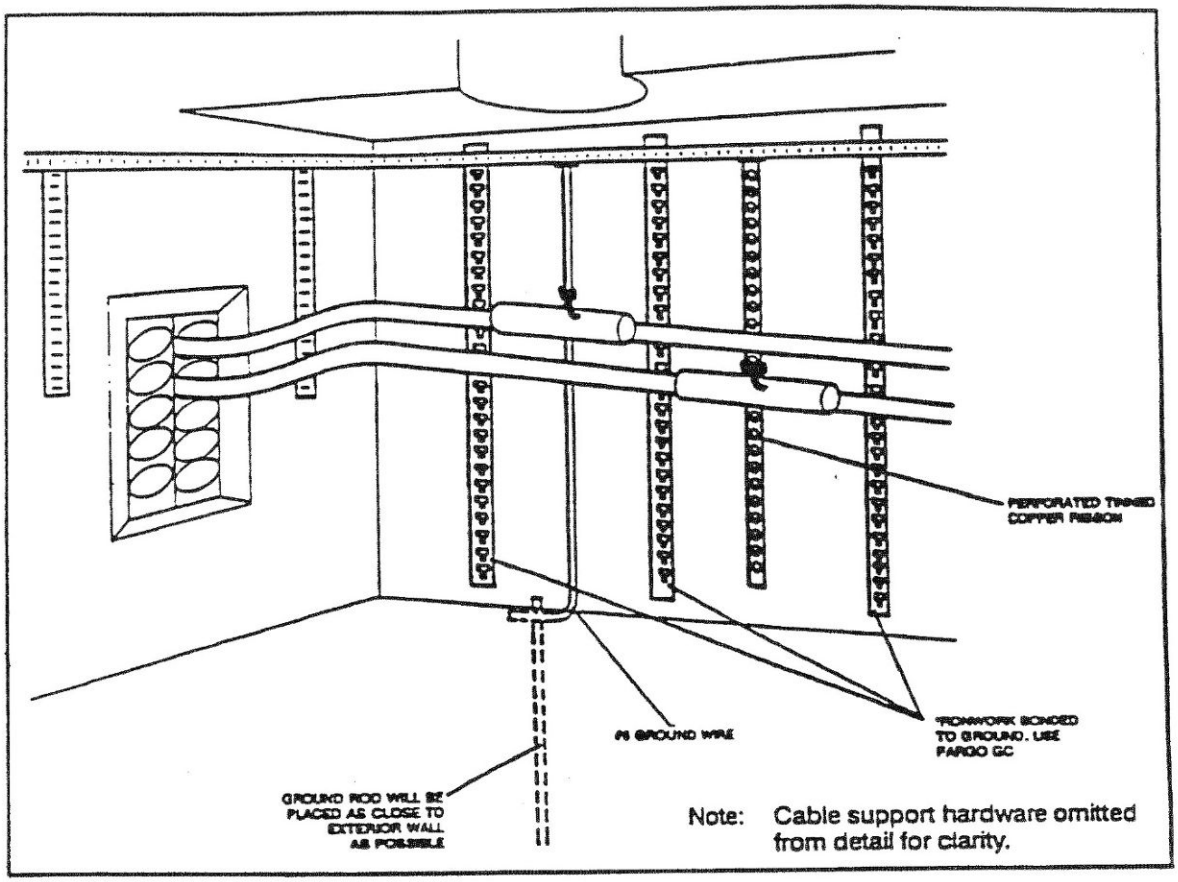

4. Installing Ground Rods in Maintenance Holes, continued

4.2 Ground Rods, continued

The ground rod placed must be at least eight feet long. Although the rod will have to protrude through the maintenance hole ring when placing starts, it should be driven as vertical as possible.

Caution: Check to ensure no power cables are below the maintenance hole before driving ground rods.

The following must be bonded together and bonded to the ground bonding ribbon / wire in every maintenance hole, as illustrated below.

- Iron work.
- Metal closures.
- Metal air pipe fittings.

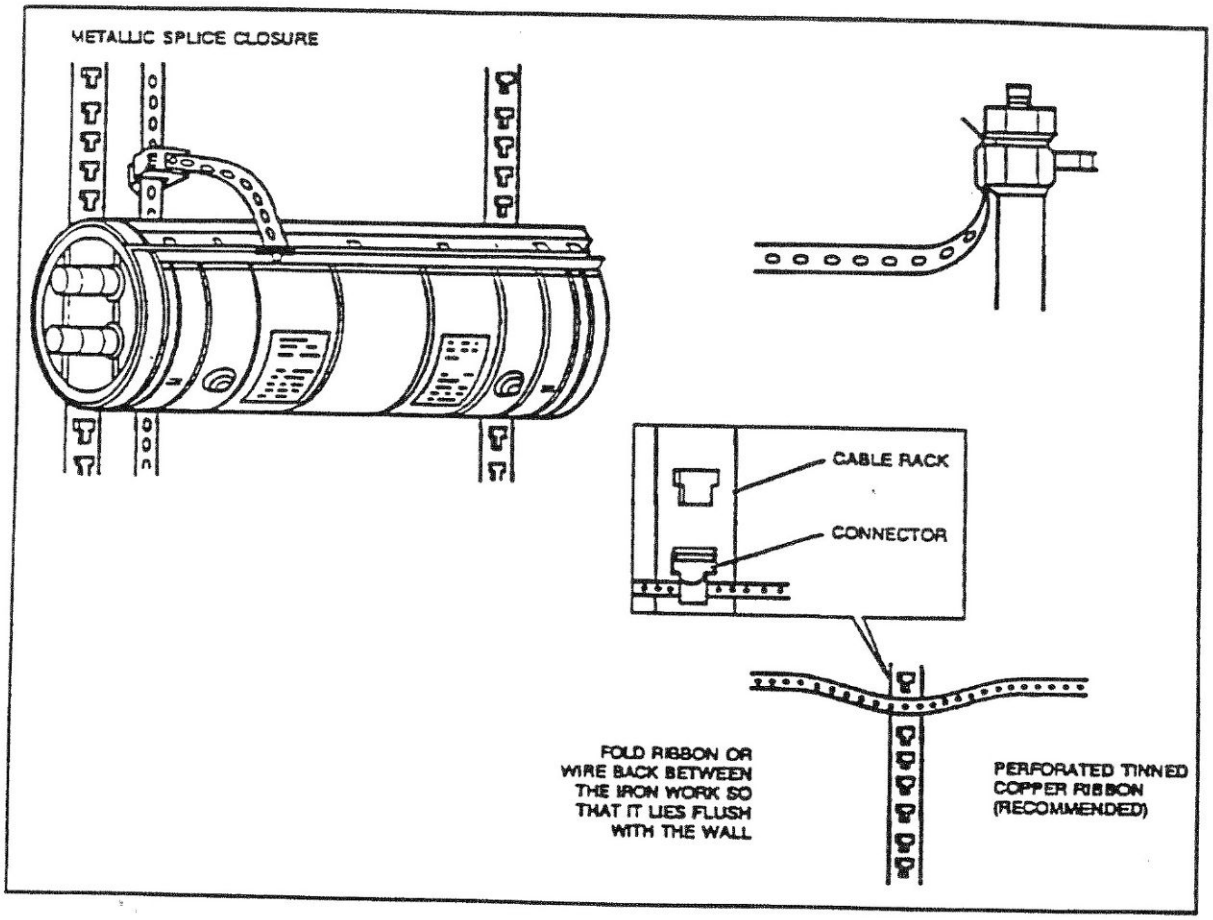

5. Installing Bonding Ribbon/Wire Clamps in Maintenance Holes

5.1 Installing Ribbon / Wire Clamps

Step	Installing Ribbon/Wire Bonds and Clamps
1	Attach the bonding ribbon/wire clamps, approximately 18 inches apart, to the maintenance hole walls. **NOTE: Place sufficient bonding ribbon/wire clamps to bond all future cables racked on both sides of the maintenance hole.**

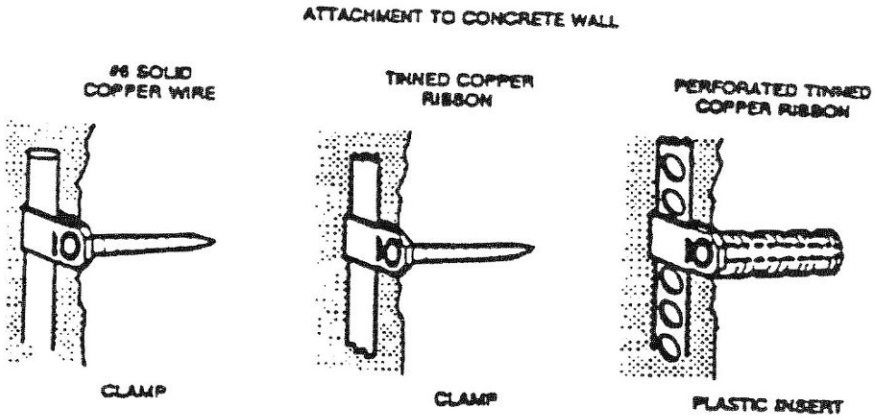

2	Extend the bonding ribbon/wire: A. Horizontally across the side walls at a level which is at the same height a the top of the iron work (cable racks). B. Around the end wall near the maintenance hole roof. C. Down both side walls. **NOTE: The vertical bonding ribbon/wire in a:** • **Precast maintenance hole is used to bond the top and bottom halves of the maintenance hole which includes the ground system.** • **Site-poured maintenance hole requiring a company driven grou rod is extended down to the ground rod and attached.**

(continued)

5. Installing Bonding Ribbon/Wire Clamps in Maintenance Holes, continued

5.1 Installing Ribbon / Wire Clamps, continued

Step	Installing Ribbon/Wire Bonds and Clamps
3	Placing of bend or corners in the bonding ribbon/wire is to be 6-inch radius or greater. There must be no sharp bends or folding of the bonding ribbon.

ACCEPTABLE NOT ACCEPTABLE

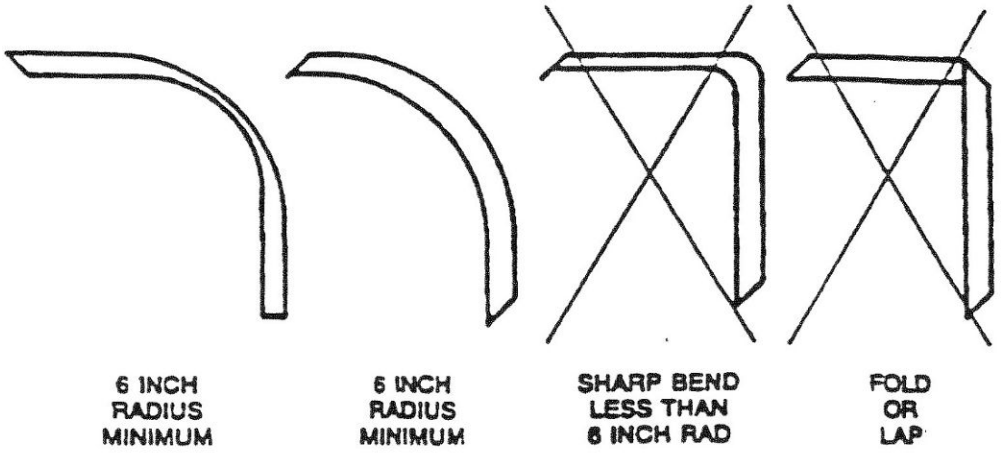

5. Installing Bonding Ribbon/Wire Clamps in Maintenance Holes, continued

5.2 Attaching Bonding Ribbon / Wire to Iron Work

Bond all iron work together ant to ground. All connections must be metal-to-metal contacts.

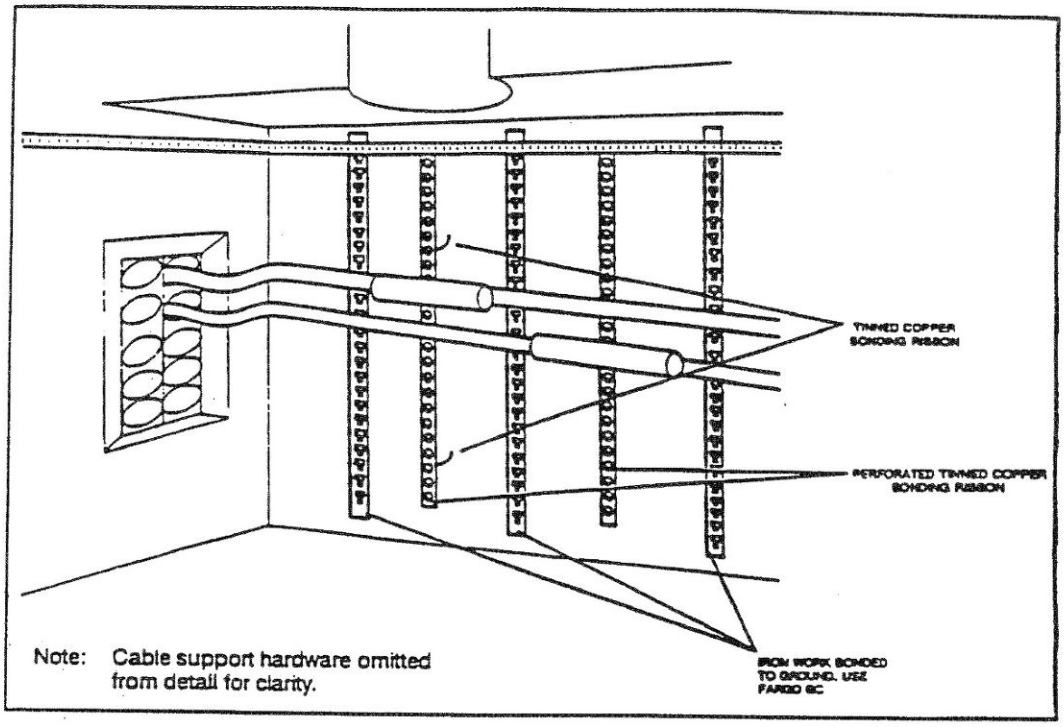

5.3 Attaching Bonding Ribbon / Wire to Ground Rod

Bonding connections to the ground rod must be made using the HAWAIIAN TELCOM standard 5/8-inch rod clamp.

5. Installing Bonding Ribbon/Wire Clamps in Maintenance Holes, continued

5.4 Connecting Bonding Ribbons / Wires

Refer to illustration below for connecting bonding ribbon/wires:

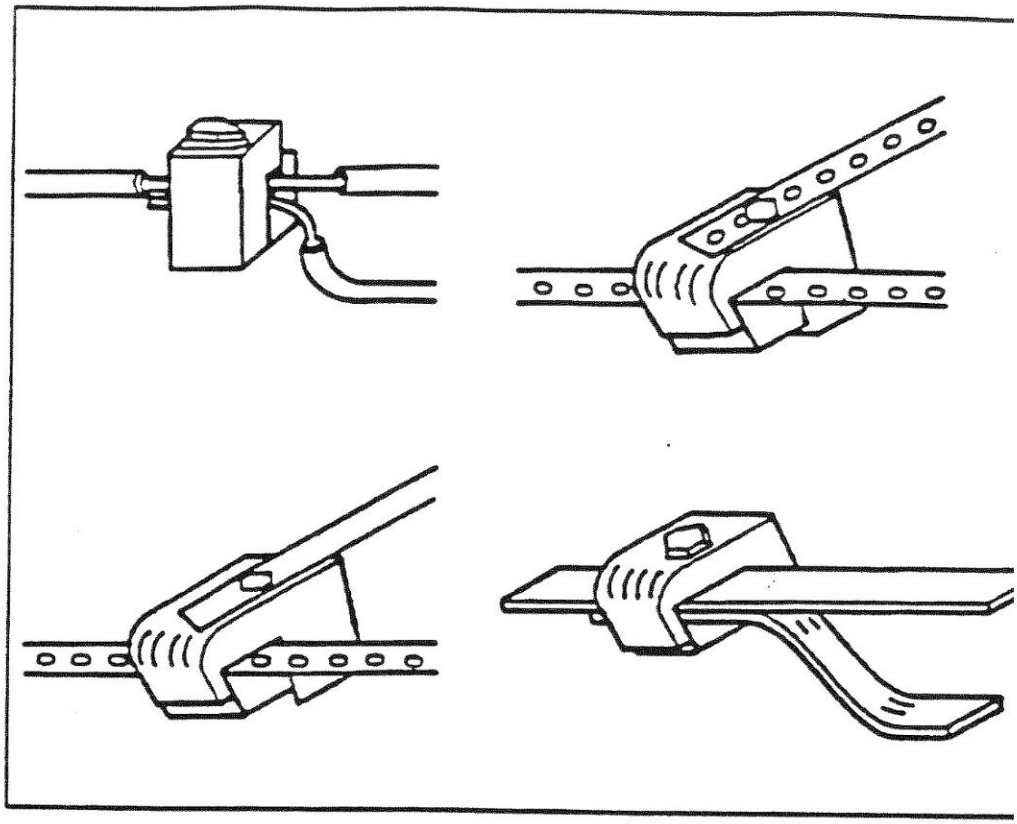

6. Installing Bond to Cable

6.1 Lead Sheath Cable

To bond all lead sheath cables and lead sleeve splices to the underground grounding system:

- Use a bonding ribbon connector GC-164PWR (SMC 528513) to attach the conductor to the perforated tinned ribbon.
- Solder a shield bond clamp to the cable sleeve. For bonding arrangements Refer to 5.4 Connecting Bonding Ribbons/Wires above.

6. Attaching Bond to Cable, continued

6.2 Stalpeth Cable

For information on bonding Stalpeth, refer to the following chart.

If…	Then…
Detail construction plans specify shield-bonding on cables(s)	Open the sheath and place the bonding conductor as described in Practice 605-100-201.
Main sleeves are present	1. Connect a piece of bonding conductor or strap to the underground grounding system. 2. Solder this to the sleeve.
Splice closures are used	Attach the bonding conductor strap to the: • Splice closures. AND • Grounding system.

6.3 Alpeth and FPA Cable

For information on bonding Alpeth and Fused Polyethylene Aluminum cable, refer to the following chart.

If…	Then…
An auxiliary sleeve is used	Bond the: 1. Auxiliary sleeve to the main sleeve by beating down the main sleeve and wiping. 2. Main sleeve.
Splice closures are used	Attach the bonding conductor or strap to the: • Splice closure. AND • Grounding system.

6. Attaching Bond to Cable, continued

6.4 Fiber Optic Ca with a Closure

All fiber cable containing a metallic shield must have all splice points bonded to the grounding system. Bond the nonmetallic cable's shield to the grounding system as illustrated below.

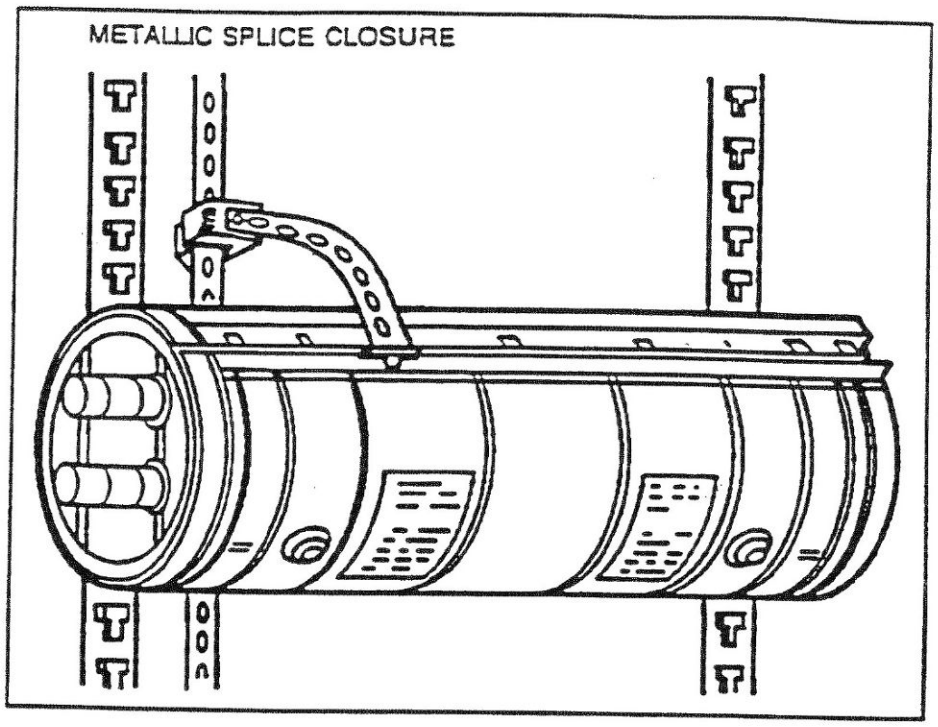

NOTE: Place the bond from shield to shield on the outside of the closure. This allows removal of the bond in the future when isolating sections of cable without requiring the removal of the closure.

6.5 Metal Splice Closure

All metallic splice closures must have the case bonded to the grounding system in all situations. This requirement is to help prevent corrosion.

7. Bonding to a Main Sleeve or an Auxiliary Sleeve

7.1 Bonding Procedure

Solder the lower plate of the bonding clamp to the lead sleeve. Attach the conductor as shown below.

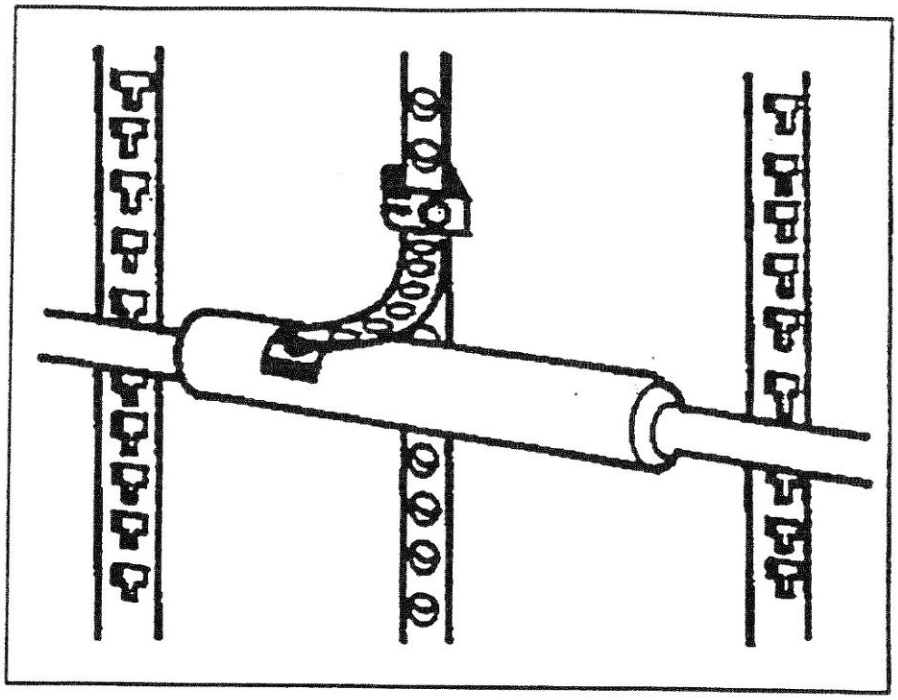

SECTION 15:

GENERAL CONSTRUCTION / DESIGN NOTES

GENERAL CONSTRUCTION NOTES WITHIN A BUILDING

UNDERGROUND CONSTRUCTION STANDARDS FOR RESIDENTIAL PROPERTY

GENERAL CONSTRUCTION / DESIGN NOTES

1. The Contractor shall procure and pay for all licenses and permits from the City or State, and shall give all notices necessary and incident to the due and lawful prosecution of the work.

2. The Contractor shall provide all telecom drawings to HT-PlanReviews@hawaiiantel.com for review & approval at least 3 months ahead of the start of construction.

3. The Contractor shall submit an excavation permit and toning request to Hawaiian Telcom's Excavation Permit team at HT-Excavations@hawaiiantel.com or at http://www.hawaiiantel.com/excavation.

4. Prior to the excavation of the duct line, the contractor shall request Hawaiian Telcom to locate existing duct line wherever required. Call One-Call at #811 for underground cable locating and marking, five (5) calendar days advance notice is required. The locations of existing utilities are approximate only.

5. Contractor shall exercise extreme caution and shall maintain proper clearances whenever construction crosses or is in close proximity of Hawaiian Telcom facilities. The Contractor shall verify their locations and shall be liable for any damages to Hawaiian Telcom facilities. Any damages shall be reported immediately to Hawaiian Telcom's repair section at 808-643-3456. As a result of their operations, adjustments to the new duct line alignment, if required, shall be made to provide the required clearances.

6. The Contractor shall take necessary precaution not to damage existing cables or ducts. A Hawaiian Telcom inspector or designated representative is required to be at any job site whenever there will be a breakage into or entry into any structure that contain Hawaiian Telcom facilities. Temporary cable and duct supports shall be provided wherever necessary.

7. The Contractor shall notify Hawaiian Telcom's inspector or designated representative a minimum of five (5) calendar days prior to excavation, bracing, or backfilling of Hawaiian Telcom's structures or facilities. Email HT-Inspectors@hawaiiantel.com to find an inspector in your area.

8. All applicable construction work shall be done in accordance with the HAWAIIAN TELCOM STANDARD SPECIFICATIONS FOR PLACING COMMUNICATIONS SYSTEMS. All subsequent amendments and additions, and all other pertinent standards for telecommunication construction. Contractor shall familiarize their personnel by obtaining applicable specifications.

9. When excavation is adjacent to or beneath Hawaiian Telcom's existing structures or facilities, the contractor shall:

    a. Sheet and/or brace the excavation to prevent slides, cave-ins, or settlements to ensure no movement to Hawaiian Telcom's structures or facilities.

    b. Protect existing structures and/or facilities with beams, struts, or underpinning while excavating beneath them to ensure no movement to Hawaiian Telcom's structures or facilities.

10. The Contractor shall brace all poles or light standards near the new duct line, maintenance hole, or handhole during their operations.

11. The Contractor shall saw-cut A.C. pavement and concrete gutter wherever new maintenance holes, handholes, or duct lines are to be placed and shall restore to existing condition or better.

12. The Contractor shall comply with the policy adopted by the Department of Public Works, City and County, concerning the replacement of concrete sidewalks after excavation work.

13. The underground pipes, cables, or duct lines known to exist by the engineer from their search of records are indicated on the plans. The Contractor shall verify the locations and depths of the facilities and exercise proper care in excavating in the area. Wherever connections of new utilities to existing utilities are shown on the plans, the Contractor shall expose the existing lines at the proposed connections to verify their locations and depths prior to excavation for the new lines.

14. Wherever connections to existing utilities are shown on the plans, the contractor shall expose the existing lines prior to excavation of the main trenches to verify their locations and depths.

15. Trench shall have a flat surface and shall be deep enough to obtain minimum cover (see trench detail drawing 34028 in Section 12).

    a. 12" backfill above concrete encased or direct buried conduits must be soft earth or sand and free of rocks. Fill must be able to pass through a 1/2" screen.

16. The Contractor, at their own expense, shall keep the project and surrounding area free from dust nuisance. The cost for supplementary measures, which will be required by the Federal, State, or County, shall be borne by the Contractor.

17. The Contractor shall pump all maintenance holes dry during final inspection.

18. The inspector is not required to accept the infrastructure until all construction work in the area is complete.

19. The Contractor shall notify Hawaiian Telcom inspector 5 calendar days prior to the pouring of concrete or backfilling.

20. When connecting to maintenance holes walls, all existing reinforcing bars shall be left intact. Ducts shall be adjusted in the field in order to clear reinforcing bars.

21. In joint trench applications, HT ducts should not be covered by other ducts in parallel. HT ducts cannot cross under power facilities.

22. The Contractor shall be responsible for laying out all required lines and grades and shall preserve all bench marks and working points necessary to lay out the work correctly. The new duct line shall be adjusted by the Contractor to suit the existing conditions and the details as described in the plans.

23. Minimum concrete strength (per BICSI OSPDRM6 C-3) shall be:

For duct line & concrete pads	3000 psi at 28 days
For maintenance hole	4000 - 4500 psi at 28 days or as specified in approved drawing

24. Bends in the duct alignment, shall have a minimum radius of 25 feet for a change of direction of more than 5 degrees, either horizontally or vertically, but the maximum vertical curve shall be 30 degrees. The maximum number of 30 degree bends should not add up to over 180 degrees.

    a. All 90 degree C-bends at a pole or at the building floor slab penetration, shall have a bend radius of ten times the diameter of the duct or greater. Manufactured 90 degree duct bends may be used only for service pole, equipment risers, or building entry, unless specifically indicated as acceptable.

    b. Limit runs to (2) 90 degree bends, and U-bends not allowed.

25. Conduit riser on service pole shall terminate at least 6" above grade with riser ends capped with weather head or plugged with duct seal.

a. When telephone and electric service conduits terminate on the same service pole, preferably, the two conduits should be placed opposite each other on the service pole. However, it is permissible to place conduits with less separation but not less than 1/4 of the circumference of the pole (climbing space must be maintained).

b. Riser conduit shall be properly strapped.

c. Muletape or approved equivalent shall be installed in all conduits.

26. Suggested maximum lengths between maintenance holes are 450', 350' between 3x5 or 4x6 handholes, 250' between 2x4 pullboxes, and 150' between meter boxes; subject to engineering approval.

27. Recommend 18" under sidewalk but not less than 12" on private property, and 36" minimum in the right of way or under paved areas.

28. Clearance from power or foreign conduit - 3" when encased in concrete; 4" when separated with brick or mason; or 12" of well tamped earth. 6" when crossing or 12" when parallel to foreign objects, i.e., power, water or sewer pipe, etc.

    a. 6" when concrete encased from local power company.

    b. Telecom should be above electrical when underground.

    c. BWS requires a 3' minimum clearance to water mains (or 5' minimum to water mains 16" and larger) on Oahu only.

    d. Check with local utilities for any changes to their spacing requirements as well.

29. Minimum Protection Requirements for facilities subjected to vehicular traffic:

Conduit Size	Type	Method of Construction
2" or 4"	PVC Schedule 40	Concrete Encased preferred OR required if less than 36" below grade or other applicable NESC requirements (whichever is smaller)

30. Strongly recommend that trees with aggressive root systems are not planted near conduit system.

31. After duct line has been completed, a mandrel with a square front not less than 12" long and having a diameter of 1/4" less than the inside diameter of the duct, shall be pulled through each duct after which a brush with stiff bristles shall be pulled through to make certain that no particles of earth, sand, or gravel have been left inside. Ducts shall be completely dry and clean.

32. All ducts and conduits shall have an 1800# polyester mule-tape (NEPTCO, WP1800P, Hawaiian Telcom Material Code No. 571154) installed throughout its entire length. All ducts shall be capped to prevent entry of foreign material during construction and at the completion of installation.

GENERAL CONSTRUCTION NOTES WITHIN A BUILDING

1. Metallic entrance conduits shall be grounded.

2. All conduits within a building shall:

    a. Be installed in the shortest and straightest possible run.

    b. Have no section longer than 100 feet nor contain more than two 90-degree bends. An approved sized junction box or gutter box shall be placed if this is exceeded.

    c. Have long sweep radius bends but the inside radius of the bend MUST never be less than ten times the diameter of the conduit.

3. Ducts and/or conduits installed for usage by Hawaiian Telcom may be inspected by Hawaiian Telcom.

4. All construction may be inspected and approved by Hawaiian Telcom prior to the installation of any of its facilities and the energizing of its systems.

5. Contractor and/or customer shall provide Hawaiian Telcom with sufficient installation time in their occupancy timetable.

6. Contractor shall provide all materials and furnish all labor and equipment necessary.

7. The Contractor shall provide a 5/8" x 8' galvanized ground rod below the telecom cabinet or backboard and a #6TW insulated green ground wire with a 3' coil. Telecom room/cabinets/closets shall be grounded and equipped with 3/4" pressure-treated (termite-treated) AC grade backboard, with 2 coatings of fire-retardant paint applied on all sides. Non-enclosed backboards will only be acceptable in situations complying with the current National Electrical Code (NEC).

8. Inside Wiring (IW) Conduit Size (multiple, if needed) – depends on customer's service needs:

    a. From HT Connection Point to Minimum Point of Entry (MPOE, MDF, demark) = 4" typical

    b. From telecom room/cabinet/closet to next telecom room/cabinet/closet = 4" typical

    c. From telecom room to individual business/residential rooms, 1 dedicated HT conduit per service drop = 3/4" minimum

    d. Conduit arrangement for service drops = Home run or star (no piggy backing multiple units on 1 conduit)

9. All pathways that penetrate fire rated barriers should be fire-stopped in accordance with applicable codes.

10. Minimum Size Telecom room spacing:

    Junction Boxes: 16X cable diameter but not less than 4" X 4".

    Telecom Cabinets must conform to NEMA3 specification with hinged door and locking latch:

    18" X 24" X 6"
    24" X 36" X 6"
    36" X 48" X 6"

Telecom backboards:

Minimum Point of Entry (MPOE, MDF, demark) = 4’ X 8’ X 3/4”
Telecom room/closet = 2’ X 4’ X 3/4”

Distance between electrical equipment to cross-connects = 1 meter or 3’ spacing (in all directions)

Distance between electrical to telecom backboards (corner to corner) = 12”

Distance between electrical in conduit or cable trays = 6” when crossing or 12” when parallel

11. All inside wiring (IW) shall be tagged (identified) at each serving terminal or NID (network interface device).

12. Galvanized eyebolts shall not be less than 5/8” in diameter.

UNDERGROUND CONSTRUCTION STANDARDS FOR RESIDENTIAL PROPERTY

1. SERVICE CONNECTION: 320' free allowance for aerial and 500' for U.G.

    a. For service drop only, 436T Water Meter Pullbox (20-1/4" x 12-3/8" x 12-0"), with metal cover or approved equal may be used if needed.

2. RESIDENTIAL UNDERGROUND CONDUIT REQUIREMENTS:

    a. Service entrance shall be located outside and must be accessible at all time. Entry location must conform to current NEC code requirements. Conduit at house or building shall rise no more than 5' and not less than 2' above grade.

    b. Conduit size – depends on customer's service needs: from HT Connection point into the home or building:

        1-1/2" - 1-4 Drops
        2" - Multi drop cable
        4" - Cable

    c. Customer retains ownership of conduit system on private property and is responsible for cost of maintenance and/or repairs.

    d. HTC retains ownership of drop up to terminating equipment and is responsible for the cost of maintenance and/or repairs.

    e. Customer to ensure conduit and pullboxes are free from obstruction prior to installation of service drop(s).

SECTION 16:

FIBER TIMELINE

Fioptics Timeline
New Construction Developments or Renovations

3rd party requests
HT responses in bold

1. Email HT-PlanReviews@hawaiiantel.com.

Developer can request the following: a Will Serve Letter, as-builds of the area, the nearest HT connection point.

Developer provides general details of the project (estimated sq ft, floors, # of units).

HT-Plan Review receives request and assigns HT Engineer.

HT Engineer replies with letter, 2-D birds-eye map, and possible/preferred HT connection point(s).

2. Designer begins drawings and shares revisions to HT-Plan Reviews & HT Engineer for review.

Developer to use HT's Engineering Specification Standards.

HT-Plan Review logs drawings and any correspondance.

HT Engineer reviews drawings, provides feedback, & answers questions.

HT MDU team may be added for in-unit specifications.

3. Final drawings are submitted to HT-Plan Reviews and HT Engineer for signature before going to electrical subcontractor.

HT Engineer signs final drawings.

HT-Plan Review logs final drawing set for HT inspectors.

4. Developer / Eletrical contractor submits proposed BOM (bill of materials) for new telecom infrastructure to HT-Plan Reviews & HT Engineer.

HT Engineer to approve or provide infrastructure drawings.

Schedule & Construction

5. If applicable, developer to schedule demolition with HT.

Developer and subcontractors ***may not*** cut out HT cables without HT permission.

HT Engineer and HT Construction to schedule cable cut-offs free of charge.

6. Contact HT Engineer / HT sales for ordering service and scheduling fiber installation at least 3 months in advance.

If there are elevator or model homes, please include this information 3 months in advance.

Provide address list and move in date when available.

HT can provide sales contacts, if needed, for scheduling individual tenant installations.

HT Engineer to design fiber and schedule construction.

7. Schedule HT Inspector prior to backfill or pouring concrete to review underground clearances. A seperate inspection may be made after backfill to mandrel test.

Update HT Engineer of any schedule changes.

HT Inspector will need an HT-signed drawing in order to complete final inspection. HT Inspector not required to accept infrastructure until construction is complete.

HT Engineer to update internal records and fiber design based on inspection results.

Move in

8. Property owner or building manager to schedule fiber installation.

Installation can occur before move-in so services are on before tenant move-in.

HT construction to begin after inspection and as much as 1 month before move-in.

PBR HAWAII
& ASSOCIATES, INC.

KIMI MIKAMI YUEN, LEED® AP BD+C
President / Chairperson

VINCENT SHIGEKUNI
Executive Vice-President / Principal

GRANT T. MURAKAMI, AICP, LEED® AP BD+C
Executive Vice-President / Principal

CATIE CULLISON, AICP
Senior Vice-President / Principal

TOM SCHNELL, AICP
Vice-President / Principal

MARC SHIMATSU, PLA, ASLA
Vice-President / Principal

RAYMOND T. HIGA, PLA, ASLA
Associate Principal

DACHENG DONG, LEED® AP
Associate Principal

NATHALIE RAZO
Associate Principal

ANN MIKIKO BOUSLOG, PhD
Director of Land Economics & Real Estate

RAMSAY R. M. TAUM
Cultural Sustainability Planner

ETSUYO KILA
Senior Associate

GREG NAKAI
Senior Associate

BRADLEY FURUYA, AICP
Associate

C.R. 'IMIPONO WICHMAN
Associate

THERESA DEAN
Associate

R. STAN DUNCAN, PLA, ASLA
Chairman Emeritus

RUSSELL Y. J. CHUNG, PLA, FASLA
Principal Emeritus

THOMAS S. WITTEN, FASLA
Principal Emeritus

W. FRANK BRANDT, FASLA
Founding Partner

January 15, 2026

Ms. Naomi Pacheco
OSP Engineer
Hawaiian Telcom
1177 Bishop Street
Honolulu, HI 96813

SUBJECT: PRE-ASSESSMENT CONSULTATION FOR A HRS CHAPTER 343 ENVIRONMENTAL ASSESSMENT – MILILANI HIGH SCHOOL TEACHER WORKFORCE HOUSING PROJECT, MILILANI, O'AHU, PORTIONS OF TAX MAP KEYS (TMKs) 9-5-001: 017 AND 054

Dear Ms. Pacheco,

Thank you for your email dated September 16, 2025, regarding the subject Project. As the planning consultant to Pacific Housing Assistance Corporation (PHAC), which is the developer working with the School Facilities Authority (SFA) on the Mililani High School Teacher Workforce Housing Project, we appreciate the information on the approximate location of Hawaiian Telcom underground infrastructure within the Mililani High School campus and in the vicinity of the proposed Project. We understand that as the proposed Project proceeds, the design team should provide more detailed plans to Hawaiian Telcom to review.

We value your participation in the environmental review process. Your email and our response will be reproduced in the forthcoming Draft Environmental Assessment (EA).

Sincerely,

PBR HAWAII

Greg Nakai
Senior Associate

cc: Lacey Shimabukuro, PHAC
Karen Arakawa, PHAC

1001 Bishop Street, Suite 650
Honolulu, Hawai'i 96813-3484
Tel: (808) 521-5631
Fax: (808) 523-1402
E-mail: sysadmin@pbrhawaii.com

printed on recycled paper

HAWAIʻIGAS
THE CLEAN ENERGY COMPANY

September 15, 2025

Mr. Greg Nakai
Senior Associate
PBR HAWAII & Associates, Inc.
1001 Bishop Street, Suite 650
Honolulu, Hawaii 96813-3484

Dear Mr. Nakai:

Subject: Pre-Assessment Consultation for a HRS Chapter 343
Environmental Assessment – Mililani High School
Teacher Workforce Housing Project, Mililani, O'ahu
Tax Map Key (TMK) 9-5-001:054 Portion Of
Plan Review and Comment

In response to your letter dated September 5, 2025, it has been determined that the area is currently clear of gas utility facilities.

Should there be any questions, or if additional information is desired, please feel free to call Christian Feria at (808) 596-1269.

Sincerely,

Hawaii Gas

Keith K. Yamamoto
Manager, Engineering

KKY:krs

PBR HAWAII
& ASSOCIATES, INC.

KIMI MIKAMI YUEN, LEED® AP BD+C
President / Chairperson

VINCENT SHIGEKUNI
Executive Vice-President / Principal

GRANT T. MURAKAMI, AICP, LEED® AP BD+C
Executive Vice-President / Principal

CATIE CULLISON, AICP
Senior Vice-President / Principal

TOM SCHNELL, AICP
Vice-President / Principal

MARC SHIMATSU, PLA, ASLA
Vice-President / Principal

RAYMOND T. HIGA, PLA, ASLA
Associate Principal

DACHENG DONG, LEED® AP
Associate Principal

NATHALIE RAZO
Associate Principal

ANN MIKIKO BOUSLOG, PhD
Director of Land Economics & Real Estate

RAMSAY R. M. TAUM
Cultural Sustainability Planner

ETSUYO KILA
Senior Associate

GREG NAKAI
Senior Associate

BRADLEY FURUYA, AICP
Associate

C.R. 'IMIPONO WICHMAN
Associate

THERESA DEAN
Associate

R. STAN DUNCAN, PLA, ASLA
Chairman Emeritus

RUSSELL Y. J. CHUNG, PLA, FASLA
Principal Emeritus

THOMAS S. WITTEN, FASLA
Principal Emeritus

W. FRANK BRANDT, FASLA
Founding Partner

January 15, 2026

Mr. Keith K. Yamamoto
Manager, Engineering
Hawai'i Gas
P.O. Box 3000
Honolulu, HI 96802-3000

SUBJECT: PRE-ASSESSMENT CONSULTATION FOR A HRS CHAPTER 343 ENVIRONMENTAL ASSESSMENT – MILILANI HIGH SCHOOL TEACHER WORKFORCE HOUSING PROJECT, MILILANI, O'AHU, PORTIONS OF TAX MAP KEYS (TMKs) 9-5-001: 017 AND 054

Dear Mr. Yamamoto,

Thank you for your letter dated September 15, 2025, regarding the subject Project. As the planning consultant to Pacific Housing Assistance Corporation (PHAC), which is the developer working with the School Facilities Authority (SFA) on the Mililani High School Teacher Workforce Housing Project, we appreciate the information that the area is currently clear of gas utility facilities.

We value your participation in the environmental review process. Your letter and our response will be reproduced in the forthcoming Draft Environmental Assessment (EA).

Sincerely,

PBR HAWAII

Greg Nakai
Senior Associate

cc: Lacey Shimabukuro, PHAC
Karen Arakawa, PHAC

1001 Bishop Street, Suite 650
Honolulu, Hawai'i 96813-3484
Tel: (808) 521-5631
Fax: (808) 523-1402
E-mail: sysadmin@pbrhawaii.com

printed on recycled paper

Appendix B

Mililani-Waipi‘o-Melemanu Neighborhood Board No. 25

(This page intentionally left blank.)

MILILANI/ WAIPIʻO/ MELEMANU NEIGHBORHOOD BOARD NO. 25

NEIGHBORHOOD COMMISSION • 925 DILLINGHAM BOULEVARD, SUITE 160 • HONOLULU, HAWAIʻI 96817
PHONE (808) 768-3710 • FAX (808) 768-3711 • WEBSITE http:///www.honolulu.gov/nco

REGULAR MEETING AGENDA
WEDNESDAY, OCTOBER 23, 2024 at 7:30 P.M.
MILILANI HIGH SCHOOL – H BUILDING
95-1200 MEHEULA PARKWAY, MILILANI, HI 96789
AND VIRTUAL VIA WEBEX

Meeting Link: https://cchnl.webex.com/cchnl/j.php?MTID=m369359c4e541c9a75488c5659a6601ad
Meeting Number / Access Code: 2482 424 7186
Passcode: NB25 (6225 when dialing from a phone or video system)
Dial by your location: 1-408-418-9388

Google Drive: https://drive.google.com/drive/folders/1kK0RlwlrULOHw3HFRCLnoiy8MZLoYk8D?usp=drive_link
Youtube Recordings:
https://www.youtube.com/@cityandcountyneighborhoodc2559/search?query=mililani%20waipio

Rules of Speaking: Anyone wishing to speak is asked to raise their hand, and when recognized by the Chair, to address comments to the Chair. All dialogue at the meeting will be conducted by use of the microphone. Those joining the meeting on WebEx are reminded to mute their speakers until they wish to be recognized by the Chair. Anyone not following these rules will be ruled out of order by the Chair. Those providing Presentations to the Board are encouraged to do so via a PowerPoint presentation, with a projector and provide handouts for the board and the community. The public concerns and comments are limited to three (3) minutes each. Please silence all electronic devices.

All written testimony must be received in the Neighborhood Commission Office 48 hours prior to the meeting. If within 48 hours, written and/or oral testimony may be submitted directly to the board at the meeting. If submitting written testimony, please note the board and agenda item(s) your testimony concerns. Send to: Neighborhood Commission Office, 925 Dillingham Boulevard, Suite 160 Honolulu, Hawaiʻi 96817. Fax: (808) 768-3711. Email: nbtestimony@honolulu.gov.

I. CALL TO ORDER – Chair Danielle M. M. Bass
   A. Pledge of Allegiance, Public Notice, Roll Call/Quorum

II. MONTHLY REPORTS (Limited to three (3) minutes each)
   A. Honolulu Fire Department
   B. Honolulu Police Department
   C. Military – Combat Aviation Brigade, 25th Infantry Division
   D. Board of Water Supply (BWS)

III. PRESENTATIONS (Limited to five (5) minutes each)
   A. 2024 Mililani Holiday Parade and Proposed Route Information – Marilyn Lee, Mililani Lions Club

   B. Presentation of the Proposed Teacher Workforce Housing Project to be Located on the Mililani High School Campus on the Corner of Meheula Parkway and Hoʻokelewaʻa St. – Cheri Nakamura, State of Hawaiʻi School Facilities Authority (“SFA”)

   C. Presentation related to the Hawaiʻi Country Club’s Luau in Kunia – City and County of Honolulu Department of Planning & Permitting (“DPP”)

IV. APPROVAL OF MEETING MINUTES: Wednesday, September 25, 2024 Regular Meeting Minutes

V. COMMUNITY CONCERNS (Limited to three (3) minutes each)
   A. Report Of Any Events or Concerns Within the Community
   Any community member can come forward and express any comment or concern within decorum. Please, limit your comments to three (3) minutes each per issue for items not on the agenda.

VI. ELECTED OFFICIALS REPORTS (Limited to three (3) minutes each)
   A. Office of Hawaiʻi’s 1st Congressional District, Congressman Ed Case – Nestor Garcia
   B. Office of Hawaiʻi State Governor Josh Green – Toni Schwartz, Governor’s Representative
   C. Office of the City & County of Honolulu Mayor Rick Blangiardi– Tracy Kubota, Mayor’s Representative
   D. Office of the City & County of Honolulu Council District 8, Councilmember Val Okimoto
   E. Office of the City & County of Honolulu Council District 2, Councilmember Matthew Weyer
   F. Office of State Senate District 18, Senator Michelle Kidani
   G. Office of State Senate District 17, Senator Donovan Dela Cruz
   H. Office of State House District 46, Representative Amy Perruso
   I. Office of State House District 38, Representative Lauren Matsumoto
   J. Office of State House District 37, Representative Trish La Chica

VII. REPORTS OF CHAIRS AND BOARD COMMITTEES (Limited to three (3) minutes each)

A. Chair's Report
B. Community Partnerships and Community Outreach – Alex Ozawa, Chair
C. Community Recognition and Service Awards – Josie Kaʻanehe, Chair
D. Community Maintenance and Walk Audit – Martina Segura, Chair
E. Planning, Zoning, Sustainable Development, and Climate Resilience – Trevor Nagamine, Chair
F. Transportation & OMPO – Skyler Ross, Chair
G. Military Affairs and Emergency Management – Dennis Kim, Chair
H. Health, Houselessness, and Human Services – Darsha Lee, Chair
I. Parks and Recreation & Patsy T. Mink Central Oahu Regional Park – Sabrina Gustafson, Chair
J. Education – Marilyn Lee, Chair

VIII. ANNOUNCEMENTS

A. Next Board Meeting: The next scheduled board meeting will be held on Wednesday, November 27, 2024, at 7:30 pm. Location: Mililani High School – H Building.
B. Broadcast: Videotaping of Board meetings are scheduled to be shown on ʻŌlelo Focus 49, Every Second Thursday at 9:00 a.m., and on ʻŌlelo Views 54, Every First and Third Saturday at 9:00 a.m.

IX. ADJOURNMENT

A mailing list is maintained for interested persons and agencies to receive this Board's agenda and minutes. Additions, corrections, and deletions to the mailing list may be directed to the Neighborhood Commission Office (NCO) at Kapālama Hale, 925 Dillingham Boulevard, Suite 160, Honolulu, Hawaiʻi 96817; Telephone (808) 768-3710 Fax (808) 768-3711; or Email nco@honolulu.gov. Agendas and minutes are also available on the internet at www.honolulu.gov/nco

If you need an auxiliary aid/service or other accommodation due to a disability or an interpreter for a language other than English, please call the Neighborhood Commission Office at (808) 768-3710 between 8:00 a.m. and 4:00 p.m. or send an email to nco@honolulu.gov at least three (3) business days before the scheduled meeting. It may not be possible to fulfill requests received after this date.

Meeting Location: The monthly meetings of the Mililani-Waipiʻo-Melemanu Neighborhood Board #25 are held in the "H Building" on the Mililani High School campus, as indicated on the map below. The H Building is circled on the map, and parking is available in the upper campus parking lot near the intersection of Meheula Parkway and Makaimoimo Street. For convenience, parking near the Mililani High School Cafeteria is recommended.

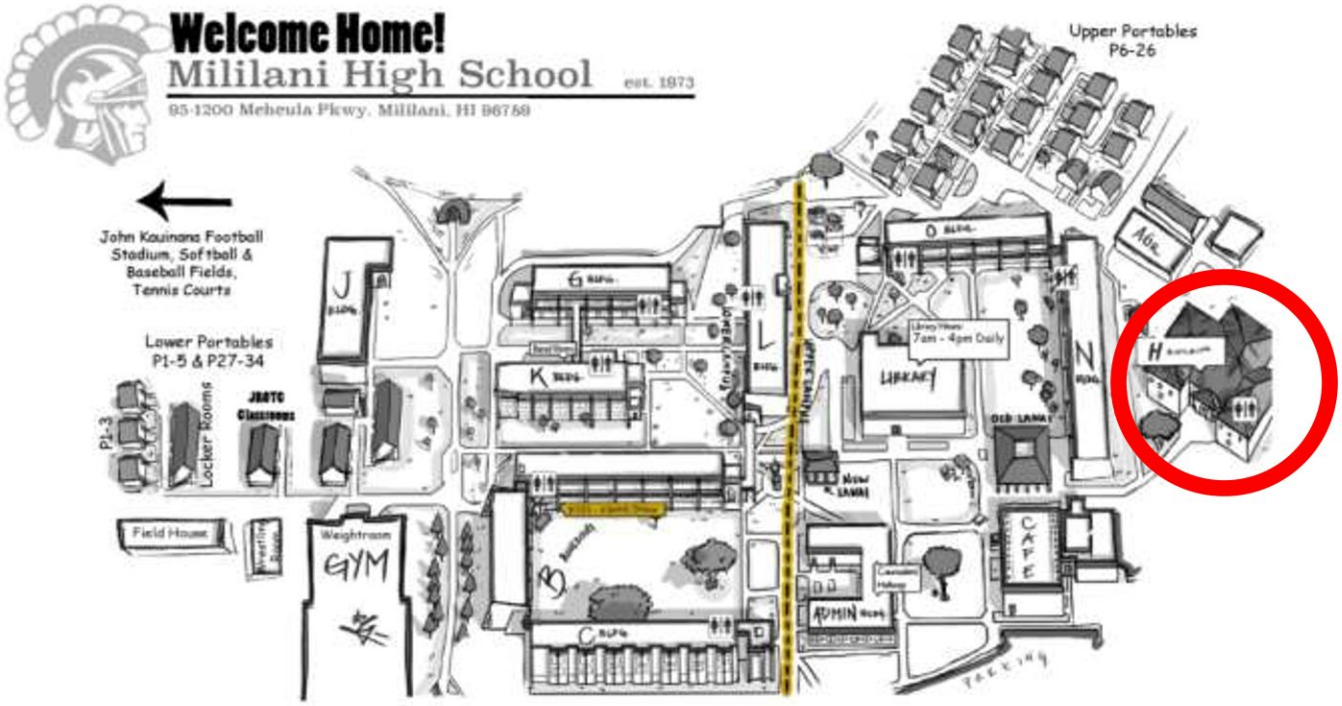

MILILANI - **WAIPIʻO** - MELEMANU NEIGHBORHOOD BOARD NO. 25

c/o NEIGHBORHOOD COMMISSION | 925 DILLINGHAM BOULEVARD SUITE 160 | HONOLULU, HAWAIʻI, 96817
PHONE (808) 768-3710 | FAX (808) 768-3711 | WEBSITE: http://www.honolulu.gov/nco

REGULAR MEETING WRITTEN SUMMARY FOR VIDEO RECORD
WEDNESDAY, OCTOBER 23, 2024 - 7:30 P.M.
MILILANI HIGH SCHOOL H-BUILDING – 95-1200 MEHEULA PKWY, MILILANI, HI 96789
AND VIA WEBEX

Video recording of this meeting can be found at: https://www.youtube.com/watch?v=7js9CunVaIM

Google Drive Link: https://drive.google.com/drive/folders/1kK0RlwlrULOHw3HFRCLnoiy8MZLoYk8D

I. CALL TO ORDER – [0:00:01]

Chair Danielle Bass called the meeting to order at 7:30 p.m. The Board recited the Pledge of Allegiance. Chair Bass indicated that she would like to conduct a quick poll to find out which agenda item the many community members are attending [0:01:24]. A poll was conducted [0:01:30]. Chair Bass provided the rules for the Neighborhood Board meeting [0:02:08]. Roll call was conducted [0:04:07] and quorum was established with 19 members present [0:05:36]. Note: This 23-member Board requires 12 members to establish a quorum and to take official Board action.

Board Members Present: Danielle Bass, Josie Kaʻanehe, Dennis Kim, Marilyn Lee, Mary Smart, Sharon Williams, Rodney Park, Sabrina Gustafson, Leslie Among, Trevor Nagamine, Michael Dau, Emil Svrcina, Alex Ozawa, Martina Segura, Skyler Ross, Kurumi Kaapana-aki, Darsha Lee, Ann Freed, Ed Flores (joined at 7:43 p.m.), and Katherine Kupukaʻa (joined at 8:30 p.m.).

Board Members Absent: Rudy Rana and Elise Carmody.

Guests: Captain Sean Tateishi (Honolulu Fire Department); Lieutenant Scott Vierra (Honolulu Police Department); Kathleen Pahinui (Board of Water Supply); Toni Schwartz (Governor Green); Nestor Garcia (Congressman Case); Kelly Anaya (Councilmember Weyer); Representative Amy Perruso; Representative Trish La Chica; Malachi Burrows (Senator Donovan Dela Cruz); Councilmember Val Okimoto; Cheri Nakamura (State of Hawai'i School Facilities Authority); Fred Murphy (Mililani High School); Director Dawn Apuna (Department of Planning & Permitting); Tony Velasco (Department of Information Technology); Jan, AGW, Alan T., Alexis Libarios, Apple Damarlane, Aurenep, Boonie Parker, C.E., Chasn Passmore, Elaine, Eric Robinson, Ethan Dabu, Eugene, Feni, Ian, Jaym Daoang, Jerry, Joji Kūpaʻa Matsumotot, Justin Salcedo, Kat, KB, KC, Keoni H., Kilisi, KV, LKS, Lottie, Matt, Mrs. Geneva, Nema, S.T., Savior Iaululalo, SB, Takamoto, Val Kupihea Tuiloma, Sarah Miranda, Mark Anthony Clemente, Marie Carbone, Marissa Carbone, Kara Borges, Mary A. Christopher A., Jeremiah Matastia, Matt Calica, Becky Gustafson, Janet Riehle, Danielle Castro, Logan Riehle, Avery Tanaka, Brynn Grace, Mari Takahata, Jenny Kurahara, Sherry Howser, Ben Satoski, Sile S., Ace Olomua, Carline Tanurasa, Tom Berg, Casey A. (Residents and Guests); Rachel Cristobal (Neighborhood Commission Office). Note: Name not included if not legible or stated for the record. There were approximately 117 total participants.

II. MONTHLY REPORTS - [0:06:09]

Honolulu Fire Department (HFD) - [0:06:09]: Captain Tateishi provided the monthly statistics for September 2024 and details on the safety tips regarding smoke alarms.

- Report: https://drive.google.com/file/d/1Hzhwm5Ta7rrJgWovs_cdtARF1yAN9qvE/view?usp=drive_link

Honolulu Police Department (HPD) - [0:08:21]: Lieutenant Vierra reported the following:

- Monthly statistics for October 2024
- Safety tip for the month was in regards to burglary and theft prevention.

Questions, comments, and concerns followed - [0:10:33]

- Of the seven burglaries three were in Holanialii Street is there any information regarding those in the last week?
- What is HPD doing about vehicles racing on the neighborhood streets?
- Is there any way we can put together a community awareness plan to target who is setting off fireworks in the neighborhood?
- Would video or surveillance evidence helpful in prosecution?

Member Flores joined at 7:43 p.m.; 20 members present.

Military – Combat Aviation Brigade, 25th Infantry Division - [0:15:07]: No representative present.

Board of Water Supply (BWS) - [0:15:30]: Kathleen Pahinui reported the following:

- No water main breaks
- Provided a response to a concern raised from the previous meeting regarding if a fire hydrant can be installed in front of the Hawai'i Country Club.

Questions, comments, and concerns followed - [0:16:25]

- Are there future plans to put in water supplies?
- If we wanted to request a water supply should we contact the City & County?

III. PRESENTATIONS - [0:17:25]

2024 Mililani Holiday Parade and Proposed Route Information - [0:18:01]: Marilyn Lee from the Mililani Lions Club reported the following:

- The parade is a joint effort of the Mililani Lion's Club, the Mililani Shopping Center, Mililani Town Center, Police Department, and the Hawai'i Foodbank.
- Will be held on Saturday, December 7, 2024, at 9:00 a.m. at Mililani High School (MHS)
- Provided the route and safety guidelines

Comments followed - [0:21:04]

Presentation of the Proposed Teacher Workforce Housing Project to be Located on the Mililani High School Campus on the Corner of Meheula Parkway and Hoʻokelewaʻa St. - [0:22:01]: Cheri Nakamura from the State of Hawai'i School Facilities Authority (SFA) announced that she was present to open a collaborative dialogue on the new project. She provided information relating to the following: who is the Hawai'i School Facilities Authority; why is the project happening and why Mililani High School; why wasn't the community consulted prior to the RFP being published; in its proposal, why was a site selected that was not identified in the request for propsal (RFP); and other frequently asked questions.

- HISFA FAQ: https://drive.google.com/file/d/16IeWgXYYgT92MGnvVzfDTNCtOe0ms3VE/view?usp=drive_link
- HISFA Presentation: https://drive.google.com/file/d/1-AMnR5IlD55z34mw7jgsF00ljC-Q-9nE/view?usp=drive_link

Questions, comments, and concerns followed - [0:28:44]

- Where are you getting the comps for the proposed rent figures?
- How can the rentals be affordable if they are requiring teachers have roommates?
- Who will occupy the units if DOE employees don't apply/qualify?
- Will the complex be open to the general public for occupancy?
- Are you going to offer two parking stalls per unit?
- Are there complaints from teachers and staff that are losing the agriculture department?
- Will the new agriculture department be relocated on campus or somewhere else?
- How will it be determined who will get to live in the housing?
- Are there going to be any restrictions on people living in the homes?
- When will an environment impact statement be done and publicized?
- Is the board of education policy going to be amended to reflect smoking and other items in the home?
- Did the SFA consider moving the project to an area where there is a shortage of teachers?
- Would this building be limited to the 25-foot requirement?
- Was there any bidding process before this developer was selected?
- What was the name of the developer who was awarded the contract?
- Would people that have medical marijuana cards or registered non-restrictive sex offenders be allowed to live in the project?
- Was Principal Murphy able to meet with the developer to discuss alternative sites?
- Was this site the original proposed site for the project?
- Who in the SFA is responsible for making the final decision on this project?
- Is the SFA planning on asking for other proposals?
- How many proposals did SFA receive?
- Will the SFA take a vote for the final decision?
- What entity are you speaking about?
- What was the criteria used to decide what qualified as affordable?
- Is there a specific calculation used?
- Can stakeholders have input to limit the number of units in the project?
- Can we limit the residents to the teachers that teach in Mililani?
- Will you need a variance for this project?
- Have you taken time to look at other locations besides Mililani?
- Can you state what section of law this is in response to?
- When these rents were picked were the teacher's salaries considered?
- What was the roll of the steering committee in the choosing of the site?
- Can you clarify the roll of the steering committee?
- Are the steering committee's meetings required to follow the sunshine law?
- What are the next steps?
- Has a contract with the developer and SFA been signed?
- A contact has not been awarded, correct?
- Can SFA cancel with the developer?
- Principal Murphy, are you aware of any contract between the developer and SFA?
- Principal Murphy, are you aware of whether the proposal included a partnership agreement or a specific site?
- What site does the proposal name?

- Did the HSTA agree that 80%-120% AMI is a reasonable affordable allowance?
- Can SFA commit to making the changes to the proposal to reflect the feedback from the community?
- Can you email the board explanation of what is happening during the gap in your timeline?
- Once the facility is built is the building going to be State Buildings?
- Will the building follow the State sustainability goals?
- Is the developer going to keep the buildings in line with the government environment goals?
- Will the buildings be state owned?
- Could you explain the AMI as it pertains to Mililani?
- What does AMI stand for?
- Why is it used in a formula?
- Is that a community specific thing?
- Lorayne Aguinaldoʻs Testimony: https://drive.google.com/file/d/1xXExX06xf8xa13MmfvKNRWgFwnZclDbB/view?usp=drive_link

Member **Kupukaʻa** joined at 8:30 p.m.; 21 members present.

Hawaiʻi Country Club's Luau in Kunia - [1:41:57]: Director Dawn Apuna from the City and County of Honolulu Department of Planning & Permitting (DPP) provided a brief presentation. She acknowledged that there were concerns at the property that started last year. There were approximately 12 violations that were issued, which a few have been corrected and while others were not including the luau. Some of the violations have been moved to notice of order, which now are fines that accumulate daily. DPP also issued a cease-and-desist letter in August 2024 and the most recent enforcement was a filing a complaint in court.

Questions, comments, and concerns followed - [1:44:12]

- The maximum amount of fines is $5,000, so are you limiting the fines to follow State Law?
- Can you please let the Warrior's Luau relocate in peace at the end of the year?
- Who is affected here?
- Is it the residents on the mountain?
- Are the residents in the agriculture lands legal?
- Is it that important to stop the Luau before it relocates in January?
- Are you referring to the court filing?

Chair Bass called for order in the meeting and gaveled three times. Chair Bass reminded everyone of the rules of the meeting. [2:02:33]

Questions, comments, and concerns resumed - [2:03:06]

- Will the Luau receive the same revenue if they relocate?
- If the Laua relocates will the place they relocate to have the same historical significance so their profit will be affected?
- Is there a requirement to disclose conflicts of interest?
- Has there been a filing regarding the parties' conflict of interests?
- Has Mr. Berg declared his conflict of interest in writing?
- During 2016 - 2018 were the raves at the golf course cited for violation?
- Does DPP know if a contract for a new location has been signed?
- Does the new location have all the necessary permits?
- Should the Neighborhood Board with the City Council be looking into allowing DPP more access to increase the fines like the State to help you enforce the laws?
- Was there any electrical code violations or fines on record that would show the underground conduit isn't installed properly?
- What is the chances of correcting the violations and getting a variance for the Luau to continue?
- Could they get a variance from the City to do it?
- Is there anything this board can do to help facility the Luau's relationship with DPP?
- Is there already a location the Luau is planning to move to?
- What are the preparations for the Luau's move?
- Once the Luau moves will you drop the violations?

IV. APPROVAL OF MEETING MINUTES - [2:22:21]:

Wednesday, September 25, 2024 Regular Meeting Minutes - [2:22:34]: MOVED by Member Ross and SECONDED by Member Segura to approve the Wednesday, September 25, 2024 regular meeting minutes as distributed [2:22:48]. Hearing no discussion; the motion was ADOPTED 21-0-0 (Aye: Bass, Kaʻanehe, Kim, Marilyn Lee, Smart, Williams, Park, Gustafson, Among, Nagamine, Dau, Svrcina, Ozawa, Segura, Ross, Kaapana-aki, Darsha Lee, Freed, Flores, Kupukaʻa; Nay: None; Abstain: None) [2:23:08].

V. COMMUNITY CONCERNS - [2:23:13]

Concerns Regarding Hawai'i Country Club - [2:23:38]: Tom Berg expressed his concerns regarding the Hawai'i Country Club having 50 bins that were not covered that are most likely to have asbestos and there is an illegal paintball operation on the property.

Hilton Strike - [2:27:15]: Sherry announced that she is an employee of Hilton Hawaiian Village and they are on strike. She provided information regarding the ownership of the property and emphasized that they are being overworked Hilton Strike Flyer: https://drive.google.com/file/d/1fw-ZV6kK7uhVIwNc6cO4SvwEj2O7p01E/view?usp=drive_link

Disaster Preparedness Event - [2:30:06]: TJ Cuaresma announced that there will be a disaster preparedness event at the Haleiwa Gym on Saturday, November 9, 2024.

VI. ELECTED OFFICIAL REPORTS - [2:31:49]

Office of Hawai'i's 1st Congressional District, Congressman Ed Case - [2:32:08]: Nestor Garcia introduced Nelson the Chief of Staff for Congressman Case. Nestor highlighted that on Monday, November 25, 2024, that Congressman Case will be introducing a legislation project to see if they can get a study designated for Kaena Point to make it a natural heritage site. Nelson announced that Congressman Case is working on funding issues and went on a trip to the Middle East.

- Report: https://drive.google.com/file/d/1oFA9-HFgkHrjyrGGeHtbstMrDWxSKVSQ/view?usp=drive_link

Questions, comments, and concerns followed - [2:34:40]

- Is the Federal Funding for University of Hawaii applicable to just the Manoa campus or apply to all campuses?
- Is the Federal Government looking to do something to assist the states with the cost of replacing the protective barriers on the roadways?
- Is there any update regarding the Jones Act and its unconstitutionality?
- Why is the island of Lanai being considered a National Historical Site?
- Will you consider the island of Ka'ula as a National Historical Site?
- Do you have any reports or findings regarding the Senator's Port Task force for fireworks investigation?

Office of Hawai'i State Governor Josh Green - [2:42:27]: Toni Schwartz responded to questions that were raised from the previous meeting regarding the following: When would the Department of Transportation be opening the H1/H2 off ramp in Pearl City by the towers; update on the ethics commission vacancies; and $30 million loan prepayment for health care workers.

- Newsletter: https://drive.google.com/file/d/1Q33UKx2LUemwWvwSXpQ1sUM-xixZwWTy/view?usp=drive_link
- H1/H2 Off Ramp: https://drive.google.com/file/d/1yCU3sd3C90dPI3thTnyKA5PJszDqdJUx/view?usp=drive_link
- Governor Josh Green, M.D., appointed Roderick Becker to fill a vacancy created by Commissioner Harry J. McCarthy's untimely passing: https://ethics.hawaii.gov/wp-content/uploads/NR2024-8.pdf
- Healthcare Education Loan Repayment Program: https://ahec.hawaii.edu/ahecsite-forhealthcareprofessionals/loan-repayment-help.html

Office of the City & County of Honolulu Mayor Rick Blangiardi - [2:45:51]: Tracy Kobuta announced that Environmental Services plans to increase its sewer service charges and Board Chairs are asked to reach out to schedule a presentation. She also provided responses to the following questions raised from the previous meeting: 311 app; 311 cases follow up; and fire hydrant and pole light installation request near the Hawai'i Country Club.

- Newsletter: https://drive.google.com/file/d/1GEMe2teqSVimqCov8XTRebXYLRsQcvp6/view?usp=drive_link
- Neighborhood Commission: https://docs.google.com/presentation/d/1suYyQ3OwOTWEVTNxSFl7P_ubNNyS-VrH/edit?usp=drive_link&ouid=101205618811575423434&rtpof=true&sd=true

Questions, comments, and concerns followed - [2:48:07]

- Has the council approved the fireworks bill?
- Has the fireworks bill been vetoed?

Office of the City & County of Honolulu Council District 8, Councilmember Val Okimoto - [2:49:10]: Councilmember Okimoto provided a response to a question raised at the last meeting regarding if a police station can be in Mililani. She also announced that they're currently in community hearings that week and provided a few updates on resolutions. The next full council meeting is on Thursday, November 7, 2024, at 10:00 a.m. Councilmember Okimoto attended the Mililani Skatepark blessing.

- Newsletter: https://drive.google.com/file/d/1eqZLJcjtrJL7CEnZ_0kH3dykQ46Xz3VT/view?usp=drive_link

Comments, and concerns followed - [2:52:00]

Chair Bass announced that there were 3 Certificates of Recognition that were given - [2:52:03]
Member Kaʻanehe announced that the certificates were provided to Ashley Ohia, Brixton Ramones, and Coty Tenorio - [2:52:40]

Office of the City & County of Honolulu Council District 2, Councilmember Matthew Weyer - [2:54:52]: Kelly Anaya reported the following: legislative updates regarding Bill 40 which relates to the self-certification for solar permits and Bill 22 which legalizes certain fireworks that they both passed 3rd reading; Resolution 24213 provides recycling receptacles at city parks and recreational facilities has been adopted; Bill 52 which regulates e-bikes which passed 2nd reading at full council; and details on 2 other Bills.

- E-Bike Laws: https://drive.google.com/file/d/1e92xuTiAPUJFnlV6YgCRZvaXl878ZHhQ/view?usp=drive_link

Office of State Senate District 18, Senator Michelle Kidani - [2:56:48]: Trevor Nagamine withheld the report and was available for questions.

Questions, comments, and concerns followed - [2:57:08]

- Would the Senator be interested in hosting a Town Hall with the SFA and the Community?
- Should the board take any action regarding the MHS Workforce Housing Project?

Office of State Senate District 17, Senator Donovan Dela Cruz - [2:58:21]: Malachi Burrows provided a response to a question raised at the previous meeting regarding Senator Dela Cruzʻs approach to the SFA Teacher Housing Project.

Office of State House District 46, Representative Amy Perruso - [2:59:42]: Item deferred to the next meeting due to lack of time.

Office of State House District 38, Representative Lauren Matsumoto - [2:59:42]: Item deferred to the next meeting due to lack of time.

Office of State House District 37, Representative Trish La Chica - [2:59:42]: Item deferred to the next meeting due to lack of time.

VII. REPORTS OF CHAIRS AND BOARD COMMITTEES - [2:59:42]: Items were deferred to the next meeting due to the lack of time.

- Chair's Report
- Community Partnerships and Community Outreach - Alex Ozawa
- Community Recognition and Service Awards - Josie Kaʻanehe
- Community Maintenance and Walk Audit - Martina Segura
- Planning, Zoning, Sustainable Development, and Climate Resilience - Trevor Nagamine
- Transportation & OMPO - Skyler Ross
- Military Affairs and Emergency Management - Dennis Kim
- Health, Houselessness, and Human Services - Darsha Lee
- Parks and Recreation & Patsy T. Mink Central Oahu Regional Field - Sabrina Gustafson
- Education - Marilyn Lee
    - Kipapa Elementary: https://drive.google.com/file/d/12KP4O9sDkAdDDDzeV1YX7Pc2MgCF5JMc/view?usp=drive_link
    - Mililani High School: https://drive.google.com/file/d/1CHu0eJrgXdKhGV9d-X67OzU-9jltEyAq/view?usp=drive_link
    - Mililani Uka: https://drive.google.com/file/d/1oZokyfFLjZ3bi8egql24m-2GlAn1UspS/view?usp=drive_link

VIII. ANNOUNCEMENTS - [2:59:42]: Items were deferred to the next meeting due to the lack of time.

Next Board Meeting: The next scheduled board meeting will be held on Wednesday, November 27, 2024, at 7:30 pm. Location: Mililani High School – H Building.

Broadcast: Videotaping of Board meetings are scheduled to be shown on ʻŌlelo Focus 49, Every Second Thursday at 9:00 a.m., and on ʻŌlelo Views 54, Every First and Third Saturday at 9:00 a.m.

IX. ADJOURNMENT - [3:00:06]: The meeting adjourned at 10:30 p.m.

Submitted by: Rachel Cristobal, Neighborhood Assistant, NCO
Reviewed by: Dylan Whitsell, Deputy, NCO
Finalized by: Sabrina Gustafson, Secretary

MILILANI/ WAIPIʻO/ MELEMANU NEIGHBORHOOD BOARD NO. 25

NEIGHBORHOOD COMMISSION • 925 DILLINGHAM BOULEVARD, SUITE 160 • HONOLULU, HAWAIʻI 96817
PHONE (808) 768-3710 • FAX (808) 768-3711 • WEBSITE http:///www.honolulu.gov/nco

REGULAR MEETING AGENDA

WEDNESDAY, NOVEMBER 27, 2024 at 7:30 P.M.
MILILANI HIGH SCHOOL – H BUILDING
95-1200 MEHEULA PARKWAY, MILILANI, HI 96789
AND VIRTUAL VIA WEBEX

Meeting Link: https://cchnl.webex.com/cchnl/j.php?MTID=m369359c4e541c9a75488c5659a6601ad
Meeting Number / Access Code: 2482 424 7186
Passcode: NB25 (6225 when dialing from a phone or video system)
Dial by your location: 1-408-418-9388

Google Drive: https://drive.google.com/drive/folders/1kK0RlwlrULOHw3HFRCLnoiy8MZLoYk8D?usp=drive_link
Youtube Recordings:
https://www.youtube.com/@NeighborhoodCommissionOffice/search?query=No%2025%20Mililani%20Waipio

Rules of Speaking: Anyone wishing to speak is asked to raise their hand, and when recognized by the Chair, to address comments to the Chair. All dialogue at the meeting will be conducted by use of the microphone. Those joining the meeting on WebEx are reminded to mute their speakers until they wish to be recognized by the Chair. Anyone not following these rules will be ruled out of order by the Chair. Those providing Presentations to the Board are encouraged to do so via a PowerPoint presentation and provide handouts for the board and the community. The public concerns and comments are limited to three (3) minutes each. Please silence all electronic devices.

Written Testimony: All written testimony must be received in the Neighborhood Commission Office 48 hours prior to the meeting. If within 48 hours, written and/or oral testimony may be submitted directly to the board at the meeting. If submitting written testimony, please note the board and agenda item(s) your testimony concerns. Send to: Neighborhood Commission Office, 530 South King Street, Room 406, Honolulu, HI 96813. Fax: (808) 768-3711. Email: nbtestimony@honolulu.gov

I. CALL TO ORDER – Chair Danielle M. M. Bass
   A. Pledge of Allegiance, Public Notice, Roll Call/Quorum

II. MONTHLY REPORTS (Limited to three (3) minutes each)
   A. Honolulu Fire Department
      (Monthly report; fire and emergency incident statistics for *this community's jurisdiction for* October-November 2024, HFD safety tips reminders, and upcoming events)
   B. Honolulu Police Department
      (Monthly report; crime and incident statistics for *this community's jurisdiction for* October-November 2024, HPD safety tips, reminders, and upcoming events)
   C. U.S. Army – Combat Aviation Brigade, 25th Infantry Division
      (Monthly report; updates on previous and current questions / concerns, safety tips, reminders, and upcoming events)
   D. Board of Water Supply (BWS)
      (Monthly report; water main break incidents and statistics for *this community's jurisdiction for* October-November 2024; BWS tips, reminders, and upcoming events)

III. PRESENTATIONS (Limited to five (5) minutes each)

   A. Update on the Mahi Solar Photovoltaic Project in Kunia – Wren Wescoatt, Longroad Energy
      (*Questions specifically related to this project's presentation to follow*.)
   B. **Avian Bird Flu in Central Oʻahu Presentation** – Department of Health, Disease Outbreak Control Division (Questions specifically related to this presentation to follow.)

IV. APPROVAL OF MEETING MINUTES: Wednesday, October 23, 2024 Regular Meeting Minutes

V. COMMUNITY CONCERNS (Limited to three (3) minutes each)
   Report Of Any Events or Concerns Within the Community
   Any community member, can come forward and express any comment or concern within decorum.
   Please, limit your comments to three (3) minutes each per issue for items not on the agenda.

VI. BOARD BUSINESS:
   A. Consideration on Mililani Workforce Housing Resolution – Supporting the Hawaiʻi School Facilities Authority's intent to develop teacher workforce housing on the Mililani High School (MHS) campus. Recommending the relocation of the proposed site to the MHS-preferred location on the lower campus, near the Meheula Parkway/Anania Drive intersection and the MHS Stadium. This preferred site is suggested as an alternative to the currently proposed location on the corner of Meheula Parkway/Hoʻokelewaʻa Street.

(Materials related to this project was provided at the October 2024 meeting and is available online at: https://drive.google.com/drive/folders/1Vxr4opNnf_vAZqUcLHOnGpDdeuWTnoaX?usp=sharing, along with written testimony received. Motion and discussion to follow.)

VII. ELECTED OFFICIALS REPORTS (Limited to three (3) minutes each)
(Monthly reports given by the following elected officials or their designee; updates on previous or current questions / concerns)

A. Office of Hawai'i's 1st Congressional District, Congressman Ed Case – Nestor Garcia
B. Office of Hawai'i State Governor Josh Green – Toni Schwartz, Governor's Representative
C. Office of the City & County of Honolulu Mayor Rick Blangiardi– Tracy Kubota, Mayor's Representative
D. Office of the City & County of Honolulu Council District 8, Councilmember Val Okimoto
E. Office of the City & County of Honolulu Council District 2, Councilmember Matthew Weyer
F. Office of State Senate District 18, Senator Michelle Kidani
G. Office of State Senate District 17, Senator Donovan Dela Cruz
H. Office of State House District 46, Representative Amy Perruso
I. Office of State House District 38, Representative Lauren Matsumoto
J. Office of State House District 37, Representative Trish La Chica

VIII. REPORTS OF CHAIRS AND BOARD COMMITTEES (Limited to three (3) minutes each)

A. Chair's Report
B. Community Partnerships and Community Outreach – Alex Ozawa, Chair
C. Community Recognition and Service Awards – Josie Kaʻanehe, Chair
D. Community Maintenance and Walk Audit – Martina Segura, Chair
E. Planning, Zoning, Sustainable Development, and Climate Resilience – Trevor Nagamine, Chair
F. Transportation & OMPO – Skyler Ross, Chair
G. Military Affairs and Emergency Management – Dennis Kim, Chair
H. Health, Houselessness, and Human Services – Darsha Lee, Chair
I. Parks and Recreation & Patsy T. Mink Central Oahu Regional Park – Sabrina Gustafson, Chair
J. Education – Marilyn Lee, Chair

IX. ANNOUNCEMENTS

A. Mililani Holiday Parade: Saturday, December 7, 2024, 9:00 am
B. Upcoming Hawai'i School Facilities Authority Meetings, contact: cheri.nakamura@hisfa.org:
   i. Tuesday, December 17, 2024, 6:30 pm - 8:30 pm, Mililani High School
   ii. Wednesday, December 18, 2024, 6:30 pm - 8:30 pm, Mililani High School
C. Run for the Neighborhood Board! Candidate and Voter Registration for the 2025 Neighborhood Elections begins on December 20, 2024, for more information visit: https://web5.hnl.info/nbe, or contact the Neighborhood Commission Office at (808) 768-3710 or at NCO@honolulu.gov.
D. Next Board Meeting: This Board will RECESS their December 2024 regular meeting. The next scheduled board meeting will be held on Wednesday, January 22, 2025, at 7:30 pm. Location: Mililani High School – H Building.
E. Broadcast: Videotaping of Board meetings are scheduled to be shown on ʻŌlelo Focus 49, Every Second Thursday at 9:00 am, and on ʻŌlelo Views 54, Every First and Third Saturday at 9:00 am.

X. ADJOURNMENT

A mailing list is maintained for interested persons and agencies to receive this Board's agenda and minutes. Additions, corrections, and deletions to the mailing list may be directed to the Neighborhood Commission Office (NCO) at Kapālama Hale, 925 Dillingham Boulevard, Suite 160, Honolulu, Hawai'i 96817; Telephone (808) 768-3710 Fax (808) 768-3711; or Email nco@honolulu.gov. Agendas and minutes are also available on the internet at www.honolulu.gov/nco

If you need an auxiliary aid/service or other accommodation due to a disability or an interpreter for a language other than English, please call the Neighborhood Commission Office at (808) 768-3710 between 8:00 a.m. and 4:00 p.m. or send an email to nco@honolulu.gov at least three (3) business days before the scheduled meeting. It may not be possible to fulfill requests received after this date.

Meeting Location: The monthly meetings of the Mililani-Waipiʻo-Melemanu Neighborhood Board #25 are held in the "H Building" on the Mililani High School campus, as indicated on the map below. The H Building is circled on the map, and parking is available in the upper campus parking lot near the intersection of Meheula Parkway and Makaimoimo Street. For convenience, parking near the Mililani High School Cafeteria is recommended.

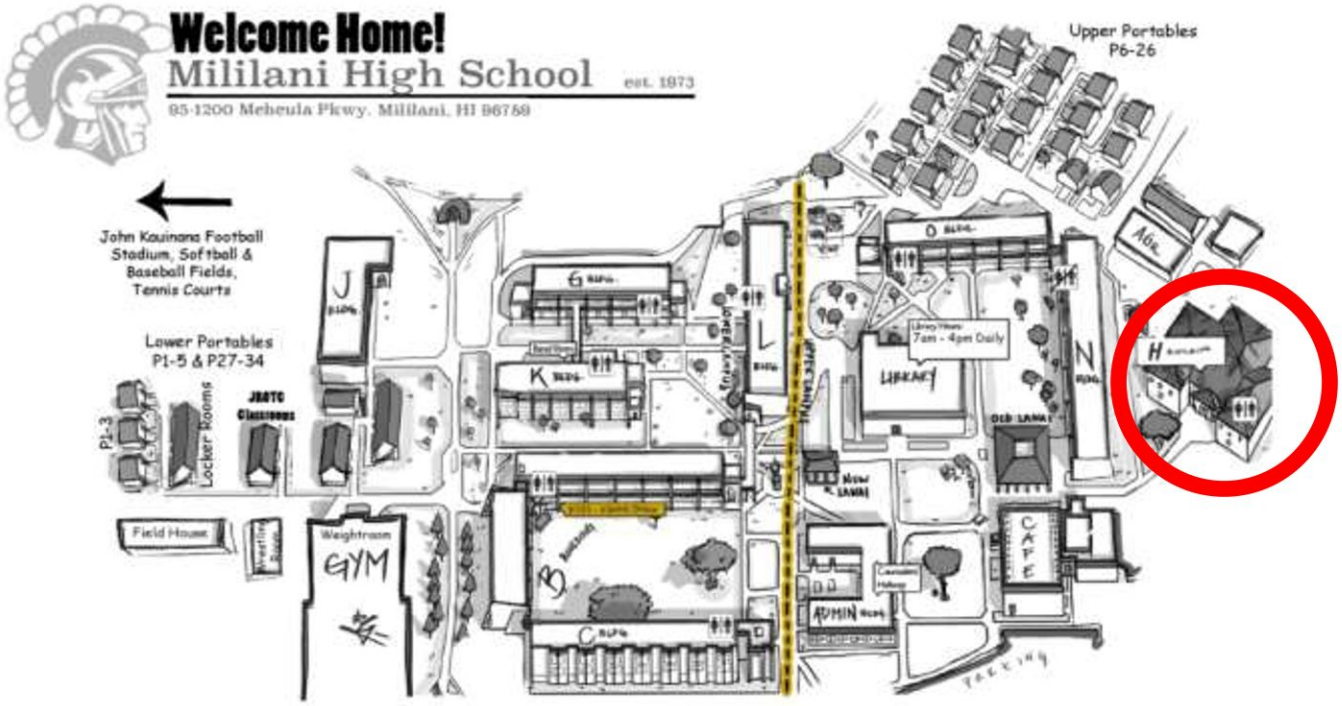
Welcome Home!
Mililani High School
est. 1973
95-1200 Meheula Pkwy, Mililani, HI 96789
John Kauinana Football Stadium, Softball & Baseball Fields, Tennis Courts
Lower Portables P1-5 & P27-34
Upper Portables P6-26
Locker Rooms
JROTC Classrooms
Field House
Weightroom
GYM
LIBRARY
7am - 4pm Daily
CAFE
ADMIN

MILILANI - **WAIPIʻO** - MELEMANU NEIGHBORHOOD BOARD NO. 25

c/o NEIGHBORHOOD COMMISSION | 925 DILLINGHAM BOULEVARD SUITE 160 | HONOLULU, HAWAIʻI, 96817
PHONE (808) 768-3710 | FAX (808) 768-3711 | WEBSITE: http://www.honolulu.gov/nco

REGULAR MEETING WRITTEN SUMMARY FOR VIDEO RECORD
WEDNESDAY, NOVEMBER 27, 2024 - 7:30 P.M.
MILILANI HIGH SCHOOL H-BUILDING – 95-1200 MEHEULA PKWY, MILILANI, HI 96789
AND VIA WEBEX

Video recording of this meeting can be found at: https://www.youtube.com/watch?v=6ovUkuBBjWA

Google Drive Link: https://drive.google.com/drive/folders/1kK0RlwlrULOHw3HFRCLnoiy8MZLoYk8D

I. CALL TO ORDER – [0:00:01]

Chair Danielle Bass called the meeting to order at 7:30 p.m. The Board recited the Pledge of Allegiance. Chair Bass provided the rules for the Neighborhood Board meeting - [0:00:51]. Roll call was conducted – [0:01:26] and quorum was established with 15 members present [0:03:26]. Note: This 23-member Board requires 12 members to establish a quorum and to take official Board action.

Board Members Present: Danielle Bass, Josie Kaʻanehe, Dennis Kim, Marilyn Lee, Mary Smart, Rodney Park, Sabrina Gustafson, Leslie Among, Trevor Nagamine, Michael Dau, Emil Svrcina, Martina Segura, Skyler Ross, Ann Freed, Ed Flores, Alex Ozawa (joined at 7:58 p.m.), Katherine Kupukaʻa (joined at 7:58 p.m.), Darsha Lee (joined at 8:10 p.m.), and Sharon Williams (joined at 8:11 p.m.).

Board Members Absent: Rudy Rana, Ashley Trotter, Kurumi Kaapana-aki, and Elise Carmody.

Guests: Captain Jordan Taniyama (Honolulu Fire Department); Lieutenant Baysa (Honolulu Police Department); Lieutenant Block (U.S. Army); Kathleen Pahinui (Board of Water Supply); Wren Wescoatt (Longroad Energy); Dr. Kevin Clarke, Michelle Vien (Department of Health); Kelly Anaya (Councilmember Weyer); Yvonne Yoro (Representative Amy Perruso); Representative Lauren Matsumoto; Malachi Burrows (Senator Donovan Dela Cruz); Aaron W. (Councilmember Val Okimoto); Representative Trish La Chica; Cheri Nakamura (State of Hawaiʻi School Facilities Authority); Chris Aguinaldo (Mililani High School); Kaila, Leilani, Logan Riehle, Maya, Nathan L., Brandon Kinard, and Treytin C. (Residents and Guests); Rachel Cristobal (Neighborhood Commission Office). Note: Name not included if not legible or stated for the record. There were approximately 48 total participants.

II. MONTHLY REPORTS - [0:03:34]

Honolulu Fire Department (HFD) - [0:03:41]: Captain Taniyama reported the monthly statistics for the month of October 2024 and the fire safety tip regarding kitchen and cooking safety.
- More information: https://fire.honolulu.gov/
- Report: https://drive.google.com/file/d/1AeOaxnHlvOXOrho6LtxO1jXjVoxEXgcx/view?usp=drive_link

Honolulu Police Department (HPD) - [0:05:42]: Lieutenant Baysa reported the following:
- Monthly statistics for the month of November 2024
- Safety tips regarding holiday shopping

Military – Combat Aviation Brigade, 25th Infantry Division - [0:07:29]: Lieutenant Block reported the following:
- Last job fair happened in November 2024 and there will be none in December 2024.
  - Website: https:himwr.com
- Waikiki Parade is on Friday, November 29, 2024
- The 83rd anniversary of the National Pearl Harbor Remembrance Day commemoration will be held on Saturday, December 7, 2024.
- Training advisory for the month of December 2024
- Responses to Member Ross's questions that were emailed regarding rubbish dumping.
  - Illegal dumping on City and County property can be reported to the City and County of Honolulu at (808) 768-3203 or by email: illegaldumping@honolulu.gov

Questions, comments, and concerns followed - [13:14]
- If there are concerns about the dumping in the area and the Army is contacted will the Army forward the concurs to the City & County to be addressed?
- And the line is where the iron maiden is?

Board of Water Supply (BWS) - [0:14:58]: Kathleen Pahinui reported the following:
- No water main breaks
- The Board of Water Supply is hiring
- Report: https://drive.google.com/file/d/1cSpDEP5aJsrbouLDy7WdX-YqMRqfebNM/view?usp=drive_link

III. PRESENTATIONS - [0:15:51]

Update on the Mahi Solar Photovoltaic Project in Kunia - [0:15:54]: Wren Wescoatt from Longroad Energy introduced himself and mentioned that he develops renewable energy projects. He also provided a slide presentation regarding an update on the Mahi Solar Photovoltaic Project in Kunia. The presentation included the following information: why is renewable energy needed; 500 acres; combination of agriculture and solar; battery information; timeline of the project; and partnership with local farmers.

Questions, comments, and concerns followed - [0:25:15]

- Do you plan on having more of the property as agriculture land?
- Is it possible that you could open up more land for agriculture?
- Why haven't HECO consumers seen the benefit of solar farms on their monthly bills?
- Is it going to be 500 acres?
- What is the percentage that is going to be used as farms?
- So it will be offered to the public for $1 per acre per year?
- Do you think as a community service you might put in some fire hydrants?
- Across the street on Kunia road is another solar farm are they on agriculture land?
- What is the land being used for now?
- Is it currently agriculture land?
- What type of batteries are being used?
- What's the efficacy of the batteries?
- How often are we going to replace these batteries?
- What's the full charge of these batteries?
- When you are partnering with people to build this farm are you hiring locals?
- If you are unable to bring in framers what is the backup plan for the land?
- Have you talked to anyone about the DOE centralized kitchen program currently in development?
- How long are the contracts for the farmers?
- What's the percentage of the 500 acres that will be used for agriculture, but you will only let the farmers plant between the farmers so isn't that less than 500 acres?
- So the surface of the panels is less than 500 acres?

Members Ozawa and Kupukaʻa joined at 7:58 p.m; 17 members present.
Member Darsha Lee joined at 8:10 p.m.; 18 members present.
Member Williams joined at 8:11 p.m; 19 members present.

Avian Bird Flu in Central Oʻahu Presentation - [0:44:54]: Michelle Vien and Dr. Kevin Clarke from The Department of Health - Disease Outbreak Control provided a slide presentation regarding the Avian Influenza. Included in the presentation were the following: what is Bird Flu; bird flu is also known as H5N1, which can infect humans, birds, land and marine mammals; history of bird flu; symptoms; and there has been 1 confirmed H5N1 in Hawaiʻi.

Questions, comments, and concerns followed - [0:53:03]

- What happens if a cat eats and infected bird?
- Are you concerned that the flu might jump to feral chickens or pigeons?
- Is the virus that is here today the same mutation that originated in 1996?
- And since 1996 no vaccines for these animals has been developed?
- You found the virus in the sewer can you track it back to where it originated in the State?
- Do you know which part of Oahu?
- Have you heard any follow up of Mililani Residents experience illness from attending the MTA pet expo?
- So, no detection?
- Is the upper respiratory infection going around Mililani different than H5N1?

IV. APPROVAL OF MEETING MINUTES - [1:04:22]

Wednesday, October 23, 2024 Regular Meeting Minutes - [1:04:22]: Member Gustafson asked the Board if anyone had any questions or any amendments that they would like to make regarding to the listed questions on the October 2024 minutes. Hearing none; MOVED by Member Gustasfon and SECONDED by Member Smart to approve the minutes as distributed [1:04:40]. Still hearing no amendments; The motion was ADOPTED 19-0-0 (Aye: Bass, Kaʻanehe, Kim, Marilyn Lee, Smart, Park, Gustafson, Among, Nagamine, Dau, Svrcina, Segura, Ross, Freed, Flores, Ozawa, Kupukaʻa, Darsha Lee, and Williams; Nay: None.; Abstain: None) [1:05:14].

V. COMMUNITY CONCERNS - [1:05:20]: Hearing none.

VI. BOARD BUSINESS - [1:05:47]

Consideration on Mililani Workforce Housing Resolution - [1:05:51]: Member Nagamine informed the Board that the resolution should have been received by email and for those that are in person has a hardcopy [1:06:23]. He also provided a brief description and read

parts of the resolution. MOVED by Member Nagamine and SECONDED by Member Gustafson that the resolution title is Supporting the Affordable Workforce Housing Project for Teachers on Mililani High School and Recommending the Project to be Relocated **to the "Preferred Site"** at the Intersection of Meheula Parkway and Anania Drive to be adopted by the Mililani Waipio Neighborhood Board [1:08:57]. Member Gustafson requested for friendly amendment to the title to be, "Supporting the Affordable Teacher Workforce Housing Project on Mililani High School and Recommending the Project to be Relocated to the "Preferred Site" at the Intersection of Meheula Parkway and Anania Drive." The amendment was approved.
Member Smart MOVED and Member Among SECONDED for an amendment to strike out "supports development of affordable workforce ho**using for teachers, and appreciates the Pacific Housing Assistance Corporation's elegant renderings and design" and insert "strongly urges that the project align with the community's aesthetic" [1:10:38].** There was a discussion; a roll call vote was conducted [1:22:16]. The motion was NOT ADOPTED 12-3-4 (Aye: Kaʻanehe, Kim, Marilyn Lee, Smart, Park, Among, Dau, Svrcina, Flores, Ozawa, Darsha Lee, and Williams; Nay: Bass, Nagamine, and Gustafson; Abstain: Freed, Kupukaʻa, Ross, and Segura) [1:24:07]. There was a brief discussion on affordability for the teachers and it was announced that there will be a meeting hosted by The Hawaiʻi School Facilities Authority (HIFSA) on Tuesday, December 17, 2024 for the community to ask questions/provide thoughts. Chair Bass assured the Board that the concerns that were mentioned at the previous meeting were noted. A roll call vote was conducted [1:35:13]. The Mililani Workforce Housing Resolution was ADOPTED 15-0-4 (Aye: Bass, Kaʻanehe, Kim, Marilyn Lee, Park, Gustafson, Nagamine, Dau, Segura, Ross, Freed, Ozawa, Kupukaʻa, Darsha Lee, and Williams; Nay: None.; Abstain: Among, Flores, Smart, and Svrcina) [1:37:14].

- HISFA Flyer: https://drive.google.com/file/d/1TCGWMJbMZz96jzRbpRexVH-AgaledzCx/view?usp=drive_link

VII. ELECTED OFFICIAL REPORTS - [1:37:43]

Office of Hawaiʻi's 1st Congressional District, Congressman Ed Case - [1:37:46]: No representative present.

Office of Hawaiʻi State Governor Josh Green - [1:37:56]: No representative present.

- Newsletter: https://drive.google.com/file/d/1VHthLLIMY7A_sBjxD3NGM-sFweHuQHVE/view?usp=drive_link

Office of the City & County of Honolulu Mayor Rick Blangiardi - [1:38:11]: No representative present. Chair Bass informed that if there were any questions that they can relay them to the Neighborhood Assistant Rachel Cristobal.

- Newsletter: https://drive.google.com/file/d/14u1jXFmu-vfYkdLQf4kD7vVfZnwoH6KN/view?usp=drive_link

Office of the City & County of Honolulu Council District 8, Councilmember Val Okimoto - [1:38:40]: Aaron W. reported the following:

- Resolution 24-242 - Urging the Hawaiʻi State legislature to enact legislation addressing the drastic increase in property insurance premiums had passed.
- Bill 51 - The adaptive reuse of the existing commercial buildings to create more affordable housing and Bill 62 - Relating to the fire safety code to extend the deadline for the installation of fire sprinkler systems are coming up for 3rd reading.
- Response for a question raised from the previous meeting regarding the October 2024 wildfire.
- Town Hall in December 2024
- Newsletter: https://drive.google.com/file/d/15aoI34wrjycufZShHDnPpVutuoyCTLly/view?usp=drive_link

Questions, comments, and concerns followed - [1:41:06]

- How did Councilmember Okimoto vote on the empty home tax?

Office of the City & County of Honolulu Council District 2, Councilmember Matthew Weyer - [1:42:44]: Kelly Anaya reported the following:

- Councilmember Weyer wanted to express gratitude to the police department for hosting the 2024 Senior Safety Conference.
- Provided legislative updates on Bill 22 - Legalized certain fireworks despite council member Weyerʻs vote against the measure. Bill 64 - Reviews and updates the City land use ordinance will be on an agenda in December. Bill 59 - Co-introduced with Chair Waters, would reduce the single use of plastic containers at City facilities and events.

Comments followed - [1:44:42]

Office of State Senate District 18, Senator Michelle Kidani - [1:45:50]: Trevor Nagamine reported the following:

- Attended the blessing for the indoor pickleball courts at the Hawaiʻi Convention Center
- Attended the Hawaiʻi Agricultural Foundation Eat, Think, and Drink Regional Kitchenʻs meeting
- Brief information on planning to open a new kitchen facility towards Helemano Plantation.
- Newsletter: https://drive.google.com/file/d/1W8EOH9vv799nITP8Ex-0jVDexWntpcD4/view?usp=drive_link

Comments followed - [1:47:22]

Office of State Senate District 17, Senator Donovan Dela Cruz - [1:48:53]: Malachi Burrows reported the following:

- Responses for follow ups from September 2024 relating to Hawaiian Electric Company, what the Senator is doing to combat invasive species, and the teacher housing project.

Questions, comments, and concerns followed - [1:52:26]

- There was $1.2 million dollars advocated to combat the CRB did this money go to the people with affected trees?

Office of State House District 46, Representative Amy Perruso - [1:54:06]: Yvonne Yoro reported the following:
- Peoples Budget Event at Mililani High Schoolʻs Library
- Hosting a Keiki Caucus High School Internship Program

Office of State House District 38, Representative Lauren Matsumoto - [1:56:11]: Representative Matsumoto reported the following:
- Didn't have the chance to mention at the last meeting, but they were able to honor the life of Representative Mark Nakashima.
- Trunk or Treat events
- Mililani Public Library had their 40th year anniversary
- Completed her 2 years as the National Chair of Women in Government at their leadership summit.
- Update on the Mililani Satellite City Hall
- Survey on how to shape our legislation for the next session
- Newsletter: https://drive.google.com/file/d/1F5s3VRCfTmEkaQ0O_NsmV4Sr4VyCQgE2/view?usp=drive_link
- Survey: https://drive.google.com/file/d/1MLem_bzABLToLJdcAab1LJDfmly46ZF_/view?usp=drive_link

Questions, comments, and concerns followed - [1:59:54]

Office of State House District 37, Representative Trish La Chica - [2:01:23]: Representative La Chica reported the following:
- 9 or 10 young trees were vandalized back in 2022, now new trees installed.
- Pilot program for meatless meals at Mililani High School
- Community Talk Story - Condo Insurance

Questions, comments, and concerns followed - [2:05:08]
- What is your correct number to reach your office?

VIII. REPORTS OF CHAIRS AND BOARD COMMITTEES - [2:06:56]
- Chair's Report - [2:06:56]: Chair Bass announced that she attended all the SFA meetings and an all-Neighborhood Chairs meeting. She informed the members that they may have received correspondence from the Neighborhood Commission Office (NCO) regarding an OIPʻs guidance that was provided to the NCO. She explained that if items were not listed on the agenda, Board Members were not allowed to ask questions. Due to this, she informed the Board that there were a few changes onto the agenda. Also, only community members are allowed to speak during Community Concerns. She mentioned that she would like to request from the NCO to provide a presentation.

Questions, comments, and concerns followed - [2:13:12]
- How can we as members of the community who attend as representatives lose our voice?
- If Somone starts to have a comment instead of a question, are we going to say, "point of order"?
- On the site is there a booklet that will list these issues and how we are supposed to present?
- Will OIP provide any rational regarding these decisions?
- What is the alternative to standing up to the mic to ask the questions?
- Can we email the questions to the Chair to be addressed at the meeting?
- When would you be planning to email the question out?

- Community Partnerships and Community Outreach - Alex Ozawa - [2:18:01]: Member Ozawa provided a brief report.
- Community Recognition and Service Awards - Josie Kaʻanehe - [2:18:25]: No report.
- Community Maintenance and Walk Audit - Martina Segura - [2:18:31]: Member Segura informed that she had updated the google form to include a text box or an option to submit photos of complaints.

Questions, comments, and concerns followed - [2:18:53]
- Where do we send our concerns?

- Planning, Zoning, Sustainable Development, and Climate Resilience - Trevor Nagamine - [2:19:41]: No report, but expressed gratitude for those that worked on the Mililani Workforce Housing Resolution.
- Transportation & OMPO - Skyler Ross - [2:20:53]: No report
- Military Affairs and Emergency Management - Dennis Kim - [2:21:05]: Member Kim provided a brief report.
- Health, Houselessness, and Human Services - Darsha Lee - [2:22:34]: Member Darsha Lee provided a brief report.
- Parks and Recreation & Patsy T. Mink Central Oahu Regional Field - Sabrina Gustafson - [2:24:06]: Member Gustafson provided a brief report.
- Education - Marilyn Lee - [2:25:23]: Member Marilyn Lee provided a brief report.

IX. ANNOUNCEMENTS - [2:28:25]

Mililani Holiday Parade: Saturday, December 7, 2024, 9:00 am

Upcoming Hawaiʻi School Facilities Authority Meetings, contact: cheri.nakamura@hisfa.org:
Tuesday, December 17, 2024, 6:30 pm - 8:30 pm, Mililani High School
Wednesday, December 18, 2024, 6:30 pm - 8:30 pm, Mililani High School

Run for the Neighborhood Board! Candidate and Voter Registration for the 2025 Neighborhood Elections begins on December 20, 2024, for more information visit: https://web5.hnl.info/nbe, or contact the Neighborhood Commission Office at (808) 768-3710 or at NCO@honolulu.gov.

Next Board Meeting: This Board will RECESS their December 2024 regular meeting. The next scheduled board meeting will be held on Wednesday, January 22, 2025, at 7:30 pm. Location: Mililani High School – H Building
Broadcast: Videotaping of Board meetings are scheduled to be shown on ʻŌlelo Focus 49, Every Second Thursday at 9:00 am, and on ʻŌlelo Views 54, Every First and Third Saturday at 9:00 am.

X. ADJOURNMENT - [2:29:36]: The meeting adjourned at 9:59 p.m.

Submitted by: Rachel Cristobal, Neighborhood Assistant, NCO
Reviewed by: Dylan Whitsell, Deputy, NCO
Finalized by: Sabrina Gustafson, Secretary

MILILANI/ WAIPIʻO/ MELEMANU NEIGHBORHOOD BOARD NO. 25

NEIGHBORHOOD COMMISSION • 925 DILLINGHAM BOULEVARD, SUITE 160 • HONOLULU, HAWAIʻI 96817
PHONE (808) 768-3710 • FAX (808) 768-3711 • WEBSITE http:///www.honolulu.gov/nco

REGULAR MEETING AGENDA
WEDNESDAY, JANUARY 22, 2025 at 7:30 P.M.
MILILANI HIGH SCHOOL – H BUILDING
95-1200 MEHEULA PARKWAY, MILILANI, HI 96789
AND VIRTUAL VIA WEBEX

Meeting Link: https://cchnl.webex.com/cchnl/j.php?MTID=m369359c4e541c9a75488c5659a6601ad
Meeting Number: 2482 424 7186
Passcode: NB25 (6225 when dialing from a phone or video system)
Join by Phone: 1-408-418-9388
Access Code: 2482 424 7186

Meeting Materials: https://drive.google.com/drive/folders/1kK0RlwlrULOHw3HFRCLnoiy8MZLoYk8D
Recordings of Board meetings can be found at:
https://www.youtube.com/@NeighborhoodCommissionOffice/search?query=mililani%20waipio

Rules of Speaking: Anyone wishing to speak is asked to raise their hand, and when recognized by the Chair, to address comments to the Chair. All dialogue at the meeting will be conducted by use of the microphone. Those joining the meeting on WebEx are reminded to mute their speakers until they wish to be recognized by the Chair. Anyone not following these rules will be ruled out of order by the Chair. Those providing Presentations to the Board are encouraged to do so via a PowerPoint presentation and provide handouts for the board and the community. The public concerns and comments are limited to three (3) minutes each. Please silence all electronic devices.

Written Testimony: All written testimony must be received in the Neighborhood Commission Office 48 hours prior to the meeting. If within 48 hours, written and/or oral testimony may be submitted directly to the board at the meeting. If submitting written testimony, please note the board and agenda item(s) your testimony concerns. Send to: Neighborhood Commission Office, 530 South King Street, Room 406, Honolulu, HI 96813. Fax: (808) 768-3711. Email: nbtestimony@honolulu.gov

I. CALL TO ORDER – Chair Danielle M. M. Bass
   A. Pledge of Allegiance, Public Notice, Roll Call/Quorum

II. MONTHLY REPORTS (Limited to three (3) minutes each)
   A. Honolulu Fire Department
      (Monthly report; fire and emergency incident statistics for *this community's jurisdiction for* October-November 2024, HFD safety tips reminders, and upcoming events)
   B. Honolulu Police Department
      (Monthly report; crime and incident statistics for *this community's jurisdiction for* October-November 2024, HPD safety tips, reminders, and upcoming events)
   C. U.S. Army – Combat Aviation Brigade, 25th Infantry Division
      (Monthly report; updates on previous and current questions / concerns, safety tips, reminders, and upcoming events)
   D. Board of Water Supply (BWS)
      (Monthly report; water main break incidents and statistics for *this community's jurisdiction for* October-November 2024; BWS tips, reminders, and upcoming events)
   E. State of Hawaiʻi School Facilities Authority (HiSFA)
      (Monthly report and status update of Mililani High School Workforce Housing project; updates on previous and current questions / concerns, reminders, and upcoming events)

III. FILLING OF VACANCY
   A. Sub-District One (1): One (1) Vacancy

IV. PRESENTATIONS (Limited to five (5) minutes each)
(Questions specifically related to these presentations to follow, after each presentation.)
   A. **Hawaiʻi Kickstart Soccer League Request for Parking Along Lanikuhana Avenue at Kealohi** Neighborhood Park – Justin Fajota, Hawaiʻi Kickstart Soccer League

   B. City & County of Honolulu Sewer Service Fee Increases for Residential and Commercial Customers – Dr. Roger Babock, City & County of Honolulu Department of Environmental Services

V. COMMUNITY CONCERNS (Limited to three (3) minutes each)
Report Of Any Events or Concerns Within the Community
Any community member, can come forward and express any comment or concern within decorum.
Please, limit your comments to three (3) minutes each per issue for items not on the agenda.

VI. BOARD BUSINESS:

A. Approval of Meeting Minutes: Wednesday, November 27, 2024 Regular Meeting Minutes

B. Resolution – Supporting the Hawaiʻi Kickstart Soccer League's request to park along Lanikuhana Ave from 3-7 pm on weekdays.
(Motion and discussion to follow.)

VII. ELECTED OFFICIALS REPORTS (Limited to three (3) minutes each)

(Monthly reports given by the following elected officials or their designee; updates on previous or current questions / concerns)

A. Office of Hawaiʻi's 1st Congressional District, Congressman Ed Case – Nestor Garcia
B. Office of Hawaiʻi State Governor Josh Green – Toni Schwartz, Governor's Representative
C. Office of the City & County of Honolulu Mayor Rick Blangiardi – Tracy Kubota, Mayor's Representative
D. Office of the City & County of Honolulu Council District 8, Councilmember Val Okimoto
E. Office of the City & County of Honolulu Council District 2, Councilmember Matthew Weyer
F. Office of State Senate District 18, Senator Michelle Kidani
G. Office of State Senate District 17, Senator Donovan Dela Cruz
H. Office of State House District 38, Representative Lauren Matsumoto
I. Office of State House District 37, Representative Trish La Chica
J. Office of State House District 46, Representative Amy Perruso

VIII. REPORTS OF CHAIRS AND BOARD COMMITTEES (Limited to three (3) minutes each)

A. Chair's Report
B. Community Partnerships and Community Outreach – Alex Ozawa, Chair
C. Community Recognition and Service Awards – Josie Kaʻanehe, Chair
D. Community Maintenance and Walk Audit – Martina Segura, Chair
    i. Neighborhood Board Walk Form: https://forms.gle/3YeivtfDyT6VaAi1A
E. Planning, Zoning, Sustainable Development, and Climate Resilience – Trevor Nagamine, Chair
F. Transportation & OMPO – Skyler Ross, Chair
G. Military Affairs and Emergency Management – Dennis Kim, Chair
H. Health, Houselessness, and Human Services – Darsha Lee, Chair
I. Parks and Recreation & Patsy T. Mink Central Oahu Regional Park – Sabrina Gustafson, Chair
J. Education – Marilyn Lee, Chair

IX. ANNOUNCEMENTS

A. Run for the Neighborhood Board! Candidate Registration is open, and will close on Friday, February 21, 2025, for more information visit: https://web5.hnl.info/nbe, or contact the Neighborhood Commission Office at (808) 768-3710 or at NCO@honolulu.gov.
B. Next Board Meeting: The next scheduled board meeting will be held on Wednesday, February 26, 2025, at 7:30 pm. Location: Mililani High School – H Building.
C. Broadcast: Videotaping of Board meetings are scheduled to be shown on ʻŌlelo Focus 49, Every Second Thursday at 9:00 am, and on ʻŌlelo Views 54, Every First and Third Saturday at 9:00 am.

X. ADJOURNMENT

A mailing list is maintained for interested persons and agencies to receive this Board's agenda and minutes. Additions, corrections, and deletions to the mailing list may be directed to the Neighborhood Commission Office (NCO) at Kapālama Hale, 925 Dillingham Boulevard, Suite 160, Honolulu, Hawaiʻi 96817; Telephone (808) 768-3710 Fax (808) 768-3711; or Email nco@honolulu.gov. Agendas and minutes are also available on the internet at www.honolulu.gov/nco

If you need an auxiliary aid/service or other accommodation due to a disability or an interpreter for a language other than English, please call the Neighborhood Commission Office at (808) 768-3710 between 8:00 a.m. and 4:00 p.m. or send an email to nco@honolulu.gov at least three (3) business days before the scheduled meeting. It may not be possible to fulfill requests received after this date.

Meeting Location: The monthly meetings of the Mililani-Waipiʻo-Melemanu Neighborhood Board #25 are held in the "H Building" on the Mililani High School campus, as indicated on the map below. The H Building is circled on the map, and parking is available in the upper campus parking lot near the intersection

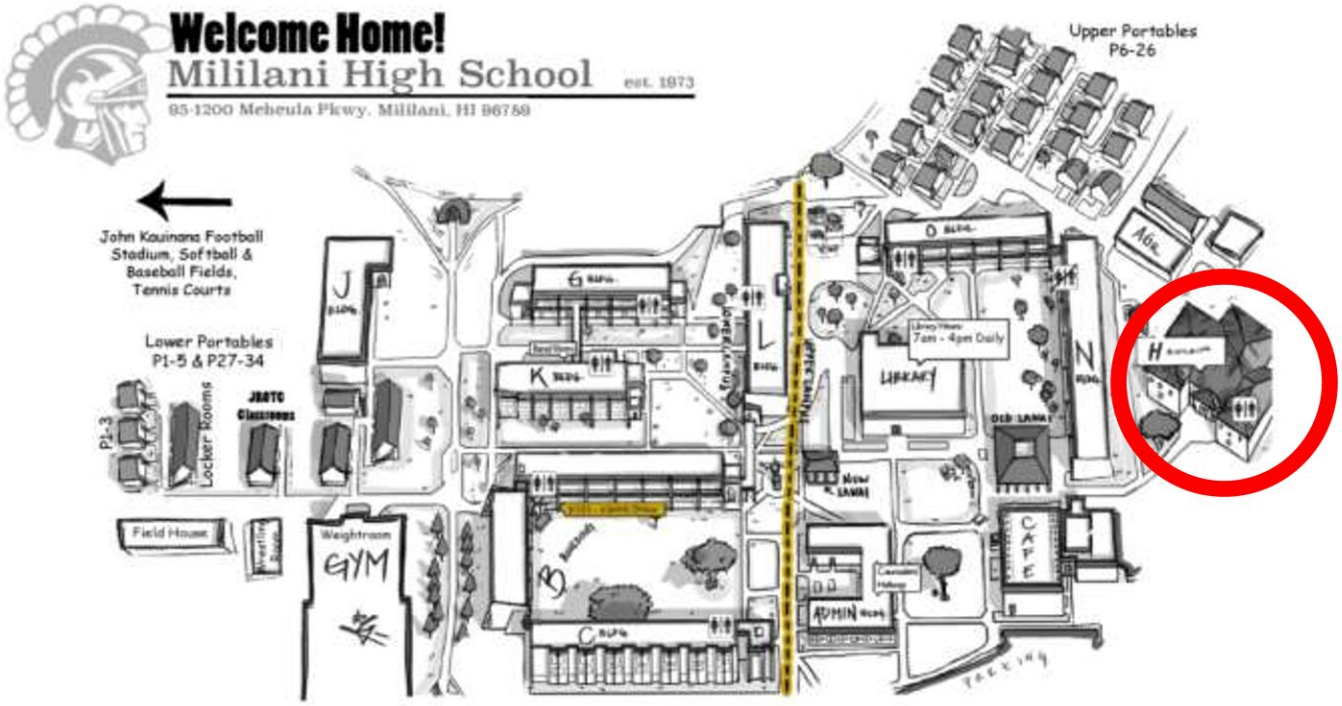
Welcome Home!
Mililani High School
est. 1973
95-1200 Meheula Pkwy, Mililani, HI 96789
John Kauinana Football Stadium, Softball & Baseball Fields, Tennis Courts
Lower Portables P1-5 & P27-34
Upper Portables P6-26
Locker Rooms
JROTC Classrooms
Field House
Weightroom
GYM
LIBRARY
7am - 4pm Daily
CAFE
ADMIN

MILILANI - **WAIPIʻO** - MELEMANU NEIGHBORHOOD BOARD NO. 25

c/o NEIGHBORHOOD COMMISSION | 925 DILLINGHAM BOULEVARD SUITE 160 | HONOLULU, HAWAIʻI, 96817
PHONE (808) 768-3710 | FAX (808) 768-3711 | WEBSITE: http://www.honolulu.gov/nco

REGULAR MEETING WRITTEN SUMMARY FOR VIDEO RECORD
WEDNESDAY, JANUARY 22, 2025 - 7:30 P.M.
MILILANI HIGH SCHOOL H-BUILDING – 95-1200 MEHEULA PKWY, MILILANI, HI 96789
AND VIA WEBEX

Video recording of this meeting can be found at: https://www.youtube.com/watch?v=HiO18LsqLd8

Google Drive Link: https://drive.google.com/drive/folders/1kK0RlwlrULOHw3HFRCLnoiy8MZLoYk8D

I. CALL TO ORDER – [0:00:01]

Chair Danielle Bass called the meeting to order at 7:30 p.m. The Board recited the Pledge of Allegiance. Chair Bass provided the rules for the Neighborhood Board meeting - [0:00:50]. Roll call was conducted – [0:01:56] and quorum was established with 16 members present [0:03:22]. Note: This 23-member Board requires 12 members to establish a quorum and to take official Board action.

Board Members Present: Danielle Bass, Josie Kaʻanehe, Dennis Kim, Marilyn Lee, Mary Smart, Rudy Rana, Sabrina Gustafson, Leslie Among, Trevor Nagamine, Michael Dau, Elise Carmody, Emil Svrcina, Darsha Lee, Sharon Williams, Skyler Ross, Ed Flores, Rodney Park (joined at 7:38 p.m.), Ann Freed (joined at 7:45 p.m.), and Katherine Kupukaʻa (joined at 7:45 p.m.).

Board Members Absent: Kurumi Kaapana-aki, Alex Ozawa, and Martina Segura.

Guests: Captain Wray (Honolulu Fire Department); Lieutenant Scott Vierra (Honolulu Police Department); Captain Block (U.S. Army); Kathleen Pahinui (Board of Water Supply); Nestor Garcia (Congressman Ed Case); Toni Schwartz (Governor Josh Green); Tracy Kubota (Mayor Rick Blangiardi); Councilmember Matt Weyer, Kelly Anaya (Councilmember Matt Weyer); Representative Amy Perruso; Representative Lauren Matsumoto; Malachi Burrows (Senator Donovan Dela Cruz); Aaron Wilson, Pualani Smith-Kauuane (Councilmember Val Okimoto); Representative Trish La Chica; Cheri Nakamura (State of Hawaiʻi School Facilities Authority); Kayla Fajota, Justin Fajota (Hawaiʻi Kickstart Soccer League); Ken Inouye, Brandon Kinard, Keone H., Marlene, Nathan Hokama, Val Kupihea Yuiloma, Kate Ozawa (Residents and Guests); Rachel Cristobal (Neighborhood Commission Office). Note: Name not included if not legible or stated for the record. There were approximately 46 total participants.

Chair Bass announced that she would like to share a moment of silence for the Fujioka and Chun families as they are a large family in the Mililani area and their children were missing - [0:03:35].

II. MONTHLY REPORTS - [0:04:26]

Honolulu Fire Department (HFD) - [0:04:30]: Captain Wray reported the monthly statistics for the month of January 2025 and the fire safety tip regarding electrical fire.

- More information: https://fire.honolulu.gov/
- Report: https://drive.google.com/file/d/1LRkUsBFci9jIIXdf7336q8lCI9CGGSTv/view?usp=drive_link

Questions, comments, and concerns followed - [0:06:16]

- What was the stats on the fireworks causing fires?
- In our district did you have problems with illegal fireworks?

Member Park joined at 7:38 p.m.; 17 members present.

Honolulu Police Department (HPD) - [0:08:17]: Lieutenant Vierra reported the monthly statistics for the month of December 2024 and provided tips on pedestrian safety.

Questions, comments, and concerns followed - [0:10:43]

- Can you speak more specifically which neighborhoods are affected by the break into cars?
- Do you have locations of where the cars were hit?
- Do you have any ideas of what can be done?
- What subdistrict have you been hearing fireworks in Mililani?

Members Freed and Kupukaʻa joined at 7:45 p.m.; 19 members present.

Military – Combat Aviation Brigade, 25th Infantry Division - [0:16:44]: Captain Block reported the following:

- February 2025 Job Fair
- Training Advisory for the month of January 2025
- Community Concern Line with US Army Garrison: (808) 787-1528

Questions, comments, and concerns followed - [0:20:14]

- Can you link up with Board Member Lee to help address the homeless setting up camp in Military property South of Kam Highway?

Board of Water Supply (BWS) - [0:21:54]: Kathleen Pahinui reported the following:
- No water main breaks
- Questions regarding landfill site
  - More information can be found at the Board of Water Supply and Departmental Environmental Services websites.

Questions, comments, and concerns followed - [0:23:24]
- Has someone reached out to Ernie Lau to challenge his position on the landfill?
- Is there a point of clarity you would like to make?

State of Hawaiʻi School Facilities Authority (HiSFA) - [0:26:43]: Chair Bass announced that HiSFA has been added onto the agenda and will be attending on a monthly basis. Cheri Nakamura provided a brief recap on the history of the Teacher Workforce Housing and updated that there is a new proposed location on the Mililani High Schoolʻs lower campus. The community is open to share comments and questions.
- Teacher Workforce Housing Update: https://drive.google.com/file/d/1rQsUM_sAfNWRcsVMaaW1pedFOm47KS4-/view?usp=drive_link

III. FILLING OF VACANCY - [0:30:11]

Sub-District One (1): One (1) Vacancy - [0:30:31]: Neighborhood Assistant Rachel Cristobal shared that there was a vacancy due to Board Member Ashley Trotter submitting her resignation. She announced that if anyone in the public is interested in becoming a Board Member that she would like to verify the individualʻs address to ensure that they live within the Sub-District before taking any nominations from any Board Members. Kate Ozawa and Brandon Kinard both showed interest in filling Sub-District 1. Chair Bass announced that the Board will proceed onto presentations and will go back to the filling of vacancy while Rachel verifies that both individuals live within the Sub-District 1.

IV. PRESENTATIONS - [0:32:08]

Hawaiʻi Kickstart Soccer League Request for Parking Along Lanikuhana Avenue at Kealohi Neighborhood Park - [0:32:10]: Justin Fajota from Hawaiʻi Kickstart Soccer League provided a slide presentation which covered the following:
- Information on Hawai'i Kickstart Soccer League
- Current parking location
- Provided a request to have Lanikuhana Avenue at Kealohi Neighborhood Park available for parking during practice hours from 3:00 p.m. to 7:00 p.m. during the weekdays as it is currently available only on the weekends and holidays only.
- Announced that the Department of Parks and Recreation and Department of Transportation are willing to support the request if the Neighborhood Board supports the request.
- Presentation: https://docs.google.com/presentation/d/13gohMfR2v7bMwSZr4-Prp-FNlJlcKZpe/edit?usp=drive_link&ouid=101205618811575423434&rtpof=true&sd=true

Questions, comments, and concerns followed - [0:36:30]
- How many cars are we talking about parking around the area?
- Has the DOT done any studies of the traffic in the area?
- What is your season that you would need access to the parking?
- Are you the only ones practicing over at the park?
- Is AYSO still there?
- Are other teams practicing there?
- How many cars do you estimate can fit in the area?
- Do you check with other leagues to see if more parking is needed?
- Would the signs that go up have limited times?

City & County of Honolulu Sewer Service Fee Increases for Residential and Commercial Customers - [0:47:46]: Director Roger Babcock from the Department of Environmental Services (ENV) provided a presentation. Included in his presentation were the following: What does ENV do; why sewer fees are going up; changes in the fee structure; new low-income assistance program; and how the additional money will be used.
- Sewer Rate Increases Flyer: https://drive.google.com/file/d/1qyMlCGI8fXOVjtEXxcFiosnCn2iig5em/view?usp=drive_link
- Comparing Sewer Bills: https://drive.google.com/file/d/1ThLGmlPUsifiJrcaN2eNmVcYbp43mcZd/view?usp=drive_link

Questions, comments, and concerns followed - [0:58:40]
- How much money are you planning on generating with this increase?
- Would private septic/sewer be something the city would consider allowing?
- How much money are you missing with your budget?
- Do you work with the Stormwater organization as well?

- How are they different?
- Is there a chance that if inflation goes down that your prices will go down?
- Could you share with us the other possibilities of things that would bring down the cost?
- Could you share some other alternatives of how you could save money instead of increasing the costs?
- Why is July 2029 a big deal and why are you increasing it so much then?
- Why are you going from $3.71 to $14.92 per 1,000 gallons used in 2034?
- Are you using this increase for other things?
- What is environmental services doing to stay ahead of the curve and go above the national standard?
- Can you explain that better?
- Can you take about how the decree came about?
- What happens to the people that can't afford the cost of inflation?
- What can we do to ease the burden on people that can't afford the cost of living?
- Is there recommendations ENV can make to reduce Volume?

III. FILLING OF VACANCY (CONTINUED) - [1:31:10]

Sub-District One (1): One (1) Vacancy (Continued) - [1:31:10]: NA Rachel Cristobal confirmed that both Kate Ozawa and Brandon Kinard were both within Sub-District 1. They both shared some details about themselves and expressed why they were interested in joining the Neighborhood Board [1:31:44].

Chair Bass opened the floor for Board Members to ask Brandon Kinard and Kate Ozawa questions [1:34:51].

- Have either of you applied to be on the neighborhood board for the upcoming session?
- Do you think Oahu can be self-sufficient?
- Do we have enough food?
- Do we have enough land?

Member Nagamine NOMINATED Kate Ozawa [1:39:40]. Member Smart NOMINATED Brandon Kinard [1:39:53]. A roll call vote was conducted [1:40:05]. Closer to the end of the vote, Kate Ozawa volunteered to withdraw from the filling of vacancy for Sub-District 1 due to the voting result being currently a tie and pending Chair Bass's vote [1:42:34]. NA Rachel Cristobal conducted another roll call vote; Brandon Kinard was voted into the Sub-District 1 vacancy 17-0-2 (Kinard: Rana, Among, Carmody, Dau, Flores, Freed, Gustafson, Kaanehe, Kim, Kupukaa, Marilyn Lee, Nagamine, Park, Ross, Smart, Svrcina, Williams, and Bass. Nay: None. Abstain: Freed and Darsha Lee) [1:43:18].

V. COMMUNITY CONCERNS - [1:45:17]: Hearing none.

VI. BOARD BUSINESS - [1:45:44]

Approval of Meeting Minutes: Wednesday, November 27, 2024 Regular Meeting Minutes - [1:45:48]: MOVED by Member Gustafson and SECONDED by Member Smart to approve the meeting minutes that were sent as written. Hearing no amendments; the motion was ADOPTED 19-0-0 (Aye: Rana, Among, Carmody, Dau, Flores, Freed, Gustafson, Kaanehe, Kim, Kupukaa, Marilyn Lee, Nagamine, Park, Ross, Smart, Svrcina, Williams, Darsha Lee, and Bass. Nay: None. Abstain: None.) [1:46:23].

Resolution – Supporting the Hawai'i Kickstart Soccer League's request to park along Lanikuhana Ave from 3-7 pm on weekdays - [1:46:30]: Member Ross shared that the resolution created would be to ask the City and County to allow the Hawai'i Kickstart Soccer League to park along Lanikuhana Avenue from 3:00 p.m. to 7:00 p.m on the weekdays [1:46:48]. MOVED by Member Ross and **SECONDED by Member Smart to support the resolution regarding Hawai'i Kickstart Soccer League's request to park along** Lanikuhana Ave from 3:00 p.m. - 7:00 p.m. on the weekdays [1:47:25]. There was a brief discussion regarding other individuals possibly parking along Lanikuhana Avenue. After hearing no further discussion, Neighborhood Assistant Rachel Cristobal conducted a roll call vote. The motion was ADOPTED by the Board with the vote of 19-0-0 (Aye: Rana, Among, Carmody, Dau, Flores, Freed, Gustafson, Kaanehe, Kim, Kupukaa, Marilyn Lee, Nagamine, Park, Ross, Smart, Svrcina, Williams, Freed, Darsha Lee, and Bass. Nay: None. Abstain: None.) [1:15:06].

Brandon Kinard was sworn in; 20 members present.

VII. ELECTED OFFICIAL REPORTS - [1:52:22]

Office of Hawai'i's 1st Congressional District, Congressman Ed Case - [1:52:23]: Nestor Garcia reported the following:

- Talk Stories/Town Halls - Congressman Ed Case would be appearing in person on Wednesday, January 29, 2025 at Mililani High School starting from 6:30 p.m.
- Winners of Ed Case's Congressional App Challenge
- Affordable Shipping for All Act: https://case.house.gov/news/documentsingle.aspx?DocumentID=3502
- Newsletter: https://drive.google.com/file/d/1VlO5YznFpwjVPbeSaHuKz7YN4jbWpqZv/view?usp=drive_link

Questions, comments, and concerns followed - [1:56:06]
- Can you elaborate a little more on the increase in postage rates?
- If I wanted to sue someone for the unconstitutionality of the Jone's Act who would I sue?
- Who would be the defendant?

Office of Hawaiʻi State Governor Josh Green - [1:58:33]: Toni Schwartz reported the following:
- State of the State Address:
  - 2,451 affordable units to be completed by the end of 2024
  - 7,796 displaces Maui residents housed
  - 554 total people assisted with their loans from the Hawaiʻi Education Loan Repayment Program (HELP)
  - 79 of the 554 people were able to pay off their loans completely
  - 17 kauhale completed to date
  - The largest income tax cut in Hawaiʻi's history was signed into law, reducing income tax payments by 71% by 2031.
- Newsletter: https://drive.google.com/file/d/1Mm5Pqsf2lz5_GYvH0H_do_HzMkM18nhs/view?usp=drive_link

Questions, comments, and concerns followed - [1:59:54]
- On the north bound lane of the Kippa Bridge (Roosevelt Bridge) there is a joint that has cracks in the cement which could be structural can you have someone look at it?
- Does the Governor have anything in mind to address the illegal fireworks?
- What policies are you thinking of opposing?
- Can you get the bridge sign replaced?

Office of the City & County of Honolulu Mayor Rick Blangiardi - [2:05:01]: Tracy Kubota reported the following:
- Provided a follow-up response regarding the request for speed humps on Lanikuhana Avenue between Kamaio Street and Luapalai Place.
- Newsletter: https://drive.google.com/file/d/1Z_jbnHhEdpSvDDhKVINDVJ8aFqLUJLSm/view?usp=drive_link

Questions, comments, and concerns followed - [2:05:56]
- Is HART really a viable project?
- Have any of the Rail rider number increased?
- How much more are we paying for the rail?
- How long are we going to have to sustain the rail?
- Are we ever going to shut it down or are we stuck with it?

Office of the City & County of Honolulu Council District 8, Councilmember Val Okimoto - [2:07:50]: Aaron reported the following:
- Announced that Pualani Smith-Kauuane is a new member of their team
- Updates on bills and resolutions that the council considered
- Provided updates on concerns that were received in January and the previous month
- Real Property Tax: https://realproperty.honolulu.gov/
- December 2024 Newsletter: https://drive.google.com/file/d/1n3G2Lj3jly-0PZv4Q4GrRXlEw_ftE3yb/view?usp=drive_link
- January 2025 Newsletter: https://drive.google.com/file/d/1J0UvRPvdINezeyR54wZzPzOk_MWf8zlx/view?usp=drive_link

Comments, and concerns followed - [2:12:07]

Office of the City & County of Honolulu Council District 2, Councilmember Matthew Weyer - [2:13:47]: Councilmember Matt Weyer reported the following:
- Will attend meetings that has issues that causes dramatic impacts
- Is open to meet, text, and call Board Members
- If any issues arise that Board Members would like him to attend, Councilmember Weyer has requested an update and will make an effort to be there as often as possible.
- Brief discussion on the landfill site and announced that there are resolutions relating to the landfill
- Provided a couple updates on bills
- Newsletter: https://drive.google.com/file/d/16yLFeaFfEiS850gqcVpn_QV_LHy7TEZz/view?usp=drive_link

Questions, comments, and concerns followed - [2:20:47]
- What can the council do to hold HPD accountable for enforcement?
- What is going to happen here with the CRB which is out of control?
- What did you mean by doing something different with the green waste?

Office of State Senate District 18, Senator Michelle Kidani - [2:30:48]: Trevor Nagamine reported the following:
- Open day was on Wednesday, January 15, 2025
- Provided Senator Kidani's 2025 priorities

Office of State Senate District 17, Senator Donovan Dela Cruz - [2:32:17]: Malachi Burrows reported the following:
- Summarized 3 Bills that Senator Dela Cruz introduced to oppose the placement of the landfill.

- Provided details on a Biosecurity Bill
- The Ways and Means Committee is wrapping budget informational briefings

Questions, comments, and concerns followed - [2:38:18]
- Can we get a comprehensive update regarding the fireworks bills out there and their progress through the legislature?

Office of State House District 38, Representative Lauren Matsumoto - [2:40:49]: Representative Matsumoto reported the following:
- Bill Filing Deadline: Thursday, January 23, 2025
- Details from Opening Day
- Performed the violin with the Mililani Band Orchestra students
- The Government is releasing $6 Million for the covered play court for Mililani High School
- Newsletter: https://drive.google.com/file/d/1BjaEa5L-x5TMffKKr74XrxR6y7i4oR9n/view?usp=drive_link
- Stay Connected: https://drive.google.com/file/d/1w7pBt8OOIowBm5kVHK--KzLGBdrS_R3j/view?usp=drive_link
- 2025 Key Session Dates: https://drive.google.com/file/d/1-euOoGIkTvfUXelolmN_VR8mlYOETbyQ/view?usp=drive_link

Questions, comments, and concerns followed - [2:43:55]
- What was your thought process behind your reductions of income tax and general excise tax measures?

Office of State House District 37, Representative Trish La Chica - [2:46:44]:
- Details from Opening Day
- Expressed gratitude to the Neighborhood Board for passing the resolution for the Hawaiʻi Kickstart Soccer League
- Serving a part of House Leadership as the Assistant Majority Floor Leader
- She's the Vice Chair of Education and joined 2 new committees on Housing and Transportation
- Updates on Outreach Services that her office is working with
- Newsletter: https://drive.google.com/file/d/1bbtPoK0mDLAjwZlTvngRlT0dtYhaAjZ1/view?usp=drive_link

Questions, comments, and concerns followed - [2:50:45]
- Why is it a good idea to introduce House Bill 329 which exempts the SFA from the sunshine law?
- Did the SFA request to be removed from the sunshine law requirement?
- What is your thoughts behind House Bill 321?

Office of State House District 46, Representative Amy Perruso - [2:55:52]: Representative Amy Perruso reported the following:
- In the House there is an Environmental Caucus Bill addressing the landfill concern.
- For updates and digital newsletters, please subscribe at representativeamyperruso.com
- Track House Bill (HB) 969 to follow and support our landfill bill: https://www.capitol.hawaii.gov/session/measure_indiv.aspx?billtype=HB&billnumber=969&year=2025

Questions, comments, and concerns followed - [2:57:07]
- How do we get a consolidated report regarding the fireworks?

VIII. REPORTS OF CHAIRS AND BOARD COMMITTEES - [2:58:08]: Items were deferred to the next meeting due to the lack of time.
- Chair's Report
- Community Partnerships and Community Outreach - Alex Ozawa
- Community Recognition and Service Awards - Josie Kaʻanehe
- Community Maintenance and Walk Audit - Martina Segura
- Planning, Zoning, Sustainable Development, and Climate Resilience - Trevor Nagamine
- Transportation & OMPO - Skyler Ross
- Military Affairs and Emergency Management - Dennis Kim
- Health, Houselessness, and Human Services - Darsha Lee
- Parks and Recreation & Patsy T. Mink Central Oahu Regional Field - Sabrina Gustafson
- Education - Marilyn Lee:
  - Report: https://drive.google.com/file/d/1zNPnGFn48oemKEByWAi1cbUfkx9ydasM/view?usp=drive_link

IX. ANNOUNCEMENTS - [2:58:13]:

Run for the Neighborhood Board! Candidate Registration is open, and will close on Friday, February 21, 2025, for more information visit: https://web5.hnl.info/nbe, or contact the Neighborhood Commission Office at (808) 768-3710 or at NCO@honolulu.gov.

Next Board Meeting: The next scheduled board meeting will be held on Wednesday, February 26, 2025, at 7:30 pm. Location: Mililani High School – H Building.

Broadcast: Videotaping of Board meetings are scheduled to be shown on ʻŌlelo Focus 49, Every Second Thursday at 9:00 am, and on ʻŌlelo Views 54, Every First and Third Saturday at 9:00 am

X. ADJOURNMENT - [2:58:38]: The meeting adjourned at 10:28 p.m.

Submitted by: Rachel Cristobal, Neighborhood Assistant, NCO
Reviewed by: Dylan Whitsell, Deputy, NCO
Finalized by: Sabrina Gustafson, Secretary, NB25

MILILANI/ WAIPIʻO/ MELEMANU NEIGHBORHOOD BOARD NO. 25

NEIGHBORHOOD COMMISSION • 925 DILLINGHAM BOULEVARD, SUITE 160 • HONOLULU, HAWAIʻI 96817
PHONE (808) 768-3710 • FAX (808) 768-3711 • WEBSITE http:///www.honolulu.gov/nco

REGULAR MEETING AGENDA

WEDNESDAY, FEBRUARY 26, 2025 at 7:30 P.M.
MILILANI HIGH SCHOOL – H BUILDING
95-1200 MEHEULA PARKWAY, MILILANI, HI 96789
AND VIRTUAL VIA WEBEX

Meeting Link: https://cchnl.webex.com/cchnl/j.php?MTID=m369359c4e541c9a75488c5659a6601ad
Meeting Number: 2482 424 7186
Passcode: NB25 (6225 when dialing from a phone or video system)
Join by Phone: 1-408-418-9388
Access Code: 2482 424 7186

Meeting Materials: https://drive.google.com/drive/folders/1kK0RlwlrULOHw3HFRCLnoiy8MZLoYk8D
Recordings of Board meetings can be found at:
https://www.youtube.com/@NeighborhoodCommissionOffice/search?query=mililani%20waipio

Rules of Speaking: Anyone wishing to speak is asked to raise their hand, and when recognized by the Chair, to address comments to the Chair. All dialogue at the meeting will be conducted by use of the microphone. Those joining the meeting on WebEx are reminded to mute their speakers until they wish to be recognized by the Chair. Anyone not following these rules will be ruled out of order by the Chair. Those providing Presentations to the Board are encouraged to do so via a PowerPoint presentation and provide handouts for the board and the community. The public concerns and comments are limited to three (3) minutes each. Please silence all electronic devices.

Written Testimony: All written testimony must be received in the Neighborhood Commission Office 48 hours prior to the meeting. If within 48 hours, written and/or oral testimony may be submitted directly to the board at the meeting. If submitting written testimony, please note the board and agenda item(s) your testimony concerns. Send to: Neighborhood Commission Office, 530 South King Street, Room 406, Honolulu, HI 96813. Fax: (808) 768-3711. Email: nbtestimony@honolulu.gov

I. **CALL TO ORDER** – Chair Danielle M. M. Bass
   - **A.** Pledge of Allegiance, Public Notice, Roll Call/Quorum

II. **MONTHLY REPORTS** **(Limited to two (2) minutes each)**
   - **A. Honolulu Fire Department**
     (*Monthly report; fire and emergency incident statistics for this community's jurisdiction for January – February 2025, HFD safety tips reminders, and upcoming events*)
   - **B. Honolulu Police Department**
     (*Monthly report; crime and incident statistics for this community's jurisdiction for January – February 2025, HPD safety tips, reminders, and upcoming events*)
   - **C. U.S. Army – Combat Aviation Brigade, 25th Infantry Division**
     (*Monthly report; updates on previous and current questions / concerns, safety tips, reminders, and upcoming events*)
   - **D. Board of Water Supply (BWS)**
     (*Monthly report; water main break incidents and statistics for this community's jurisdiction for January – February 2025; BWS tips, reminders, and upcoming events*)
   - **E. State of Hawai'i School Facilities Authority (HiSFA)**
     (*Monthly report and status update of Mililani High School Workforce Housing project; updates on previous and current questions / concerns, reminders, and upcoming events*)

III. **PRESENTATIONS** **(Limited to five (5) minutes each)**
(*Questions specifically related to these presentations to follow, after each presentation.)*
   - **A. Mililani YMCA 5K Fun Run** – Maisha Abbott, Mililani YMCA
   - **B. Ke Ala Hou West Oʻahu Presentation on current homelessness initiatives in the Mililani & Melemanu area**

IV. **COMMUNITY CONCERNS** **(Limited to two (2) minutes each)**
Report Of Any Events or Concerns Within the Community
Any community member, can come forward and express any comment or concern within decorum.
Please, limit your comments to three (3) minutes each per issue for items not on the agenda.

V. BOARD BUSINESS:

A. Approval of Meeting Minutes: Wednesday, January 22, 2025 Regular Meeting Minutes

VI. REPORTS OF CHAIRS AND BOARD COMMITTEES **(Limited to two (2) minutes each)**

A. Chair's Report
B. Community Partnerships and Community Outreach – Alex Ozawa, Chair
C. Community Recognition and Service Awards – Josie Kaʻanehe, Chair
D. Community Maintenance and Walk Audit – Martina Segura, Chair
  i. Neighborhood Board Walk Form: https://forms.gle/3YeivtfDyT6VaAi1A
E. Planning, Zoning, Sustainable Development, and Climate Resilience – Trevor Nagamine, Chair
F. Transportation & OMPO – Skyler Ross, Chair
G. Military Affairs and Emergency Management – Dennis Kim, Chair
H. Health, Houselessness, and Human Services – Darsha Lee, Chair
I. Parks and Recreation & Patsy T. Mink Central Oahu Regional Park – Sabrina Gustafson, Chair
J. Education – Marilyn Lee, Chair

VII. ELECTED OFFICIALS REPORTS **(Limited to two (2) minutes each)**

(*Monthly reports given by the following elected officials or their designee; updates on previous or current questions / concerns)*

A. Office of Hawaiʻi's 1st Congressional District, Congressman Ed Case – Nestor Garcia
B. Office of Hawaiʻi State Governor Josh Green – Toni Schwartz, Governor's Representative
C. Office of the City & County of Honolulu Mayor Rick Blangiardi – Tracy Kubota, Mayor's Representative
D. Office of the City & County of Honolulu Council District 8, Councilmember Val Okimoto
E. Office of the City & County of Honolulu Council District 2, Councilmember Matthew Weyer
F. Office of State Senate District 18, Senator Michelle Kidani
G. Office of State Senate District 17, Senator Donovan Dela Cruz
H. Office of State House District 38, Representative Lauren Matsumoto
I. Office of State House District 37, Representative Trish La Chica
J. Office of State House District 46, Representative Amy Perruso

VIII. ANNOUNCEMENTS

A. Next Board Meeting: The next scheduled board meeting will be held on **Wednesday, March 26, 2025**, at 7:30 pm. Location: Mililani High School – H Building.
B. Broadcast: Videotaping of Board meetings are scheduled to be shown on ʻŌlelo Focus 49, Every Second Thursday at 9:00 am, and on ʻŌlelo Views 54, Every First and Third Saturday at 9:00 am.

IX. ADJOURNMENT

A mailing list is maintained for interested persons and agencies to receive this Board's agenda and minutes. Additions, corrections, and deletions to the mailing list may be directed to the Neighborhood Commission Office (NCO) at Kapālama Hale, 925 Dillingham Boulevard, Suite 160, Honolulu, Hawaiʻi 96817; Telephone (808) 768-3710 Fax (808) 768-3711; or Email nco@honolulu.gov. Agendas and minutes are also available on the internet at www.honolulu.gov/nco

If you need an auxiliary aid/service or other accommodation due to a disability or an interpreter for a language other than English, please call the Neighborhood Commission Office at (808) 768-3710 between 8:00 a.m. and 4:00 p.m. or send an email to nco@honolulu.gov at least three (3) business days before the scheduled meeting. It may not be possible to fulfill requests received after this date.

Meeting Location: The monthly meetings of the Mililani-Waipiʻo-Melemanu Neighborhood Board #25 are held in the "H Building" on the Mililani High School campus, as indicated on the map below. The H Building is circled on the map, and parking is available in the upper campus parking lot near the intersection

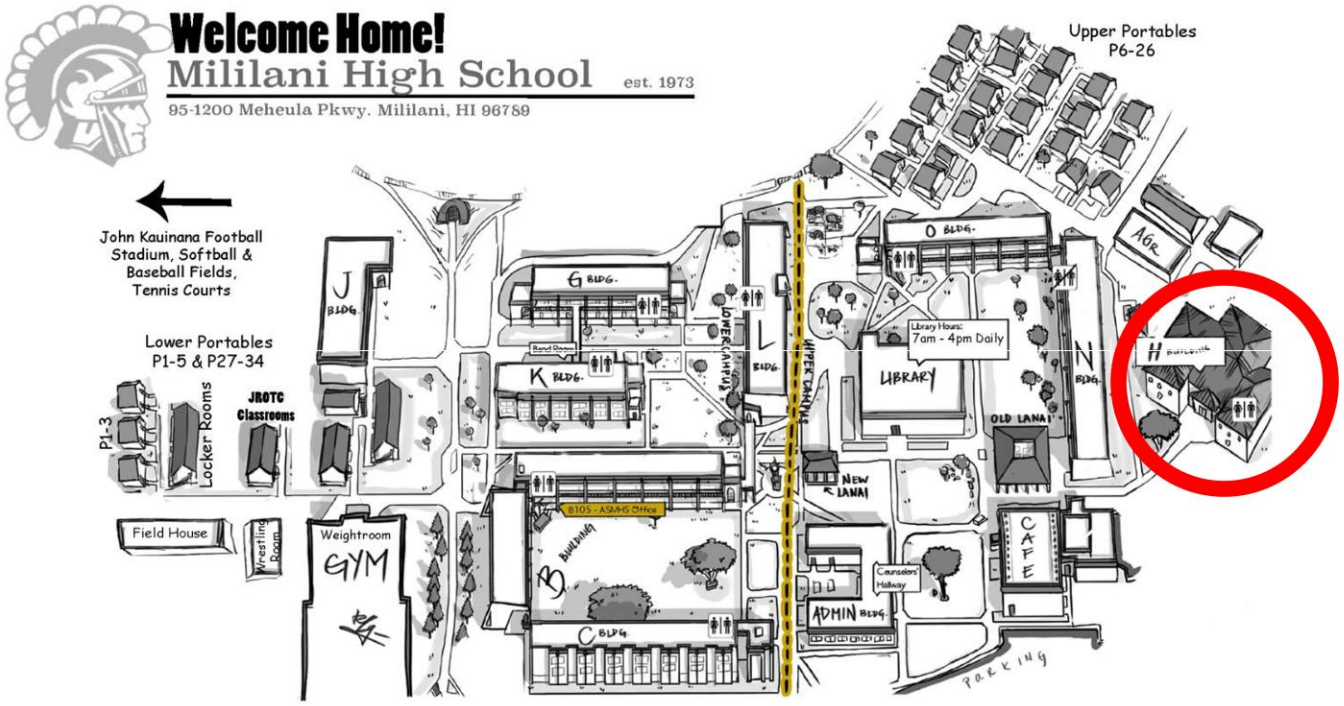
Welcome Home!
Mililani High School
est. 1973
95-1200 Meheula Pkwy. Mililani, HI 96789
John Kauinana Football Stadium, Softball & Baseball Fields, Tennis Courts
Lower Portables P1-5 & P27-34
P1-3
Locker Rooms
JROTC Classrooms
Field House
Wrestling Room
Weightroom
GYM
J BLDG.
G BLDG.
K BLDG.
Band Room
LOWER CAMPUS
L BLDG.
UPPER CAMPUS
Upper Portables P6-26
O BLDG.
AGR.
Library Hours: 7am - 4pm Daily
LIBRARY
N BLDG.
H BUILDING
OLD LANAI
NEW LANAI
B BUILDING
B105 - ASMHS Office
C BLDG.
Counselors Hallway
ADMIN BLDG.
CAFE
PARKING

MILILANI - **WAIPIʻO** - MELEMANU NEIGHBORHOOD BOARD NO. 25

c/o NEIGHBORHOOD COMMISSION | 925 DILLINGHAM BOULEVARD SUITE 160 | HONOLULU, HAWAIʻI, 96817
PHONE (808) 768-3710 | FAX (808) 768-3711 | WEBSITE: http://www.honolulu.gov/nco

REGULAR MEETING WRITTEN SUMMARY FOR VIDEO RECORD
WEDNESDAY, FEBRUARY 26, 2025 - 7:30 P.M.
MILILANI HIGH SCHOOL H-BUILDING – 95-1200 MEHEULA PKWY, MILILANI, HI 96789
AND VIA WEBEX

Video recording of this meeting can be found at: https://www.youtube.com/watch?v=IbnhabOMA3U

Google Drive Link: https://drive.google.com/drive/folders/1kK0RlwlrULOHw3HFRCLnoiy8MZLoYk8D

I. CALL TO ORDER – [0:00:07]

Chair Danielle Bass called the meeting to order at 7:31 p.m. The Board recited the Pledge of Allegiance. Chair Bass provided the rules for the Neighborhood Board meeting - [0:00:55]. Roll call was conducted – [0:01:25] and quorum was established with 18 members present [0:02:37]. Note: This 23-member Board requires 12 members to establish a quorum and to take official Board action.

Board Members Present: Danielle Bass, Josie Kaʻanehe, Dennis Kim, Marilyn Lee, Rudy Rana, Sabrina Gustafson, Leslie Among, Trevor Nagamine, Michael Dau, Elise Carmody, Kurumi Kaapana-aki, Emil Svrcina, Darsha Lee, Brandon Kinard, Sharon Williams, Skyler Ross, Martina Segura, Ed Flores, Mary Smart (joined at 7:34 p.m.), Ann Freed (joined at 7:36 p.m.), Katherine Kupukaʻa (joined at 8:05 p.m.), and Rodney Park (joined at 8:09 p.m.).

Board Members Absent: Alex Ozawa.

Guests: Captain Sean Tateishi (Honolulu Fire Department); Officer Jeremy Franks (Honolulu Police Department); Captain Block (U.S. Army); Kathleen Pahinui (Board of Water Supply); Val Kupihea Tuiloma (Ke Ala Hou West Oʻahu); Tracy Kubota (Mayor Rick Blangiardi); Kelly Anaya (Councilmember Matt Weyer); Representative Amy Perruso; Representative Lauren Matsumoto; Charles Miller (Senator Donovan Dela Cruz); Representative Trish La Chica; Cheri Nakamura (State of Hawaiʻi School Facilities Authority); Maisha Abbott (Mililani YMCA); Jovanna T., Ken Inouye, Nathan Hokama, Walton Auyong, Robin Nelson, and Jocelyn Roberts (Residents and Guests); Rachel Cristobal (Neighborhood Commission Office). Note: Name not included if not legible or stated for the record. There were approximately 42 total participants.

II. MONTHLY REPORTS - [0:03:34]

Honolulu Fire Department (HFD) - [0:03:34]: Captain Tateishi reported the monthly statistics for the month of January 2025 and the fire safety tip regarding power outage preparedness.

- More information: https://fire.honolulu.gov/
- Report: https://drive.google.com/file/d/1-bsUYp02Hw6dNaPKXrzt_bK2u9Ux0ex4/view?usp=drive_link

Member Smart joined at 7:34 p.m.; 19 members present.
Member Freed joined at 7:36 p.m.; 20 members present.

Honolulu Police Department (HPD) - [0:05:51]: Officer Franks reported the monthly statistics from Saturday, January 25, 2025 through Tuesday, February 25, 2025. He also provided the safety tip for the month regarding mail theft prevention.

Military – Combat Aviation Brigade, 25th Infantry Division - [0:07:35]: Captain Block reported the following:

- Next Hiring Job Fair: Tuesday, April 22, 2025 at the Aliamanu Military Reservation Gym from 8:30 a.m. - 2:00 p.m.
- Vietnam National Veterans Parade: Saturday, March 29, 2025 at 4:30 p.m.

Questions, comments, and concerns followed - [0:09:45]

- Would individuals that are being medically separated from the military be able to qualify for these job fair jobs?

Board of Water Supply (BWS) - [0:12:01]: Kathleen Pahinui reported the following:

- No water main breaks
- Water Waste Hotline: If the community sees that water is being wasted such as a broken pipe, they are asked to report it.
    - Call: (808) 748-5041
    - Email: contactus@hwbs.org

Questions, comments, and concerns followed - [0:12:55]

- Do you handle water from the source and water from the other side of the island?
- And the Waiahole ditch?
- You don't do that at all?
- Is it possible to have autopay for the water bills?
- So it is linked to the credit card?
- Do you charge extra charges?
- How true is it that fluoride is being used to shock the wells?

State of Hawai'i School Facilities Authority (HiSFA) - [0:15:00]: Cheri Nakamura discussed that the Teacher Workforce Housing Project at Mililani High School was originally planned for the upper campus but has been moved to the lower campus due to community feedback. The project aimed to support teacher recruitment and retention. After several meetings, concerns about the initial site's impact on school programs led to the new location adjacent to the athletic facilities, which avoided disrupting academic areas. Proposed upgrades included additional parking and walkways. Cheri acknowledged that further assessments and meetings are needed before construction.

Questions, comments, and concerns followed - [0:17:56]

- Have any meetings with the community been scheduled in the future?
- Is the affordability for the teachers being addressed and looked at?
- Have you looked at the parking situation of the community and warned the community about the increased traffic?
- There is still an environmental assessment that needs to be done so are there any financial discrepancies?
- Where are you in the process of the $5 Million assessment process previously spoken about?

III. PRESENTATIONS - [0:26:28]

Mililani YMCA 5K Fun Run - Maisha Abbott, Mililani YMCA - [0:26:31]: Maisha Abbott announced that the YMCA will be having their 5K run in Mililani on Saturday, April 26, 2025.

- Flyer: https://drive.google.com/file/d/1RoIobw8j7iWyTk0GeibZhuYmrMzSyBAh/view?usp=drive_link

Ke Ala Hou West Oʻahu Presentation on Current Homelessness Initiatives in the Mililani & Melemanu Area - [0:27:27]: Val Kupihea Tuiloma provided a presentation to explain what Ke Ala Hou West Oahu was. They are responsible for 60% of the island for outreach. They provide hygiene kits, pamphlets and anything to connect with the homeless. She expressed that the number one barrier is the lack of resources such as beds and shelters. It was mentioned that affordable housing is no longer considered affordable. Val stated that people should not call outreach if the homeless are considered dangerous. They are asked to call the Honolulu Police Department (HPD).

- Website: https://www.kealahouwestoahu.com

Questions, comments, and concerns followed - [0:33:39]

- How are you funded?
- Are you a non-profit organization?
- Do you receive state and federal funds for your program?

Member Kupukaʻa joined at 8:05 p.m.; 21 members present.

IV. COMMUNITY CONCERNS - [0:34:55]: None.

V. BOARD BUSINESS - [0:35:26]

Wednesday, January 22, 2025 Regular Meeting Minutes - [0:35:34]: Member Gustafson MOVED and Member Ross SECONDED to approve the Wednesday, January 22, 2025 regular meeting minutes as they were sent [0:35:39]. Hearing no discussion/amendments; the motion was ADOPTED 21-0-0 (Aye: Rana, Among, Carmody, Dau, Flores, Freed, Gustafson, Kaʻanehe, Kaapana-Aki, Kim, Dasha Lee, Marilyn Lee, Ross, Nagamine, Segura, Smart, Svrcina, Kinard, Williams and Bass. Nay: None. Abstain: None) [0:36:02].

VI. REPORTS OF CHAIRS AND BOARD COMMITTEES - [0:36:16]:

- Chair's Report - [0:36:21]: Chair Bass reported that there were concerns regarding the length of the meetings, so she will try to have the meetings end before 10:00 p.m. She also provided a response upon receiving legislative bills to be agendize. Lastly, the Department of Parks and Recreation had put up new signs near where the hockey rink is.

Member Park joined at 8:09 p.m.; 22 members present.

- Chair's Report (Continued) - [0:39:05]: Neighborhood Assistant Rachel Cristobal announced that the March Neighborhood Board meeting has been scheduled on Prince Kuhio Day which is a holiday. She informed the Board that they would need to take a vote. 2 options were announced which was to switch April 2025 recess to March 2025 or recess both months. There was a brief discussion. MOVED by Member Gustafson and SECONDED by Member Nagamine to change the recess from Wednesday, April 23, 2025 to Wednesday, March 26, 2025 [0:42:09]. Hearing no discussion; a voice vote was conducted. The motion was ADOPTED 21-0-1 (Aye: Rana, Among, Carmody, Dau, Flores, Freed, Gustafson, Kaneohe, Kaapana-Aki, Kim, Dasha Lee, Marilyn Lee, Nagamine, Park, Segura, Smart, Svrcina, Kinard, Williams, Bass. Nay: None. Abstain: Ross) [0:43:17].
- Community Partnerships and Community Outreach - Alex Ozawa - [0:43:37]: No representative present.
- Community Recognition and Service Awards - Josie Kaʻanehe - [0:43:45]: No report, but Member Kaʻanehe shared that if the Board Members would like to recognize anyone that they should contact her or Chair Bass.
- Community Maintenance and Walk Audit - Martina Segura - [0:44:08]: No report, but Member Segura provided a reminder that the walk form link was listed on the agenda.
    - Neighborhood Board Walk Form: https://forms.gle/3YeivtfDyT6VaAi1A

Questions, comments, and concerns followed - [0:44:22]

- Planning, Zoning, Sustainable Development, and Climate Resilience - Trevor Nagamine - [0:45:12]: No report.
- Transportation & OMPO - Skyler Ross - [0:45:27]: Member Ross reported that he had uploaded documents into the Neighborhood Board's Google Drive: https://drive.google.com/drive/folders/1kK0RlwlrULOHw3HFRCLnoiy8MZLoYk8D
- Military Affairs and Emergency Management - Dennis Kim - [0:45:57]: No report.
- Health, Houselessness, and Human Services - Darsha Lee - [0:46:12]: No report.
- Parks and Recreation & Patsy T. Mink Central Oahu Regional Field - Sabrina Gustafson - [0:46:29]: No report.
- Education - Marilyn Lee - [0:46:37]: Member Marilyn Lee provided a brief report regarding the following: A new crosswalk near Mililani ʻIke School; activities that the elementary schools has been doing; and Mililani High School has been announced as the top 10 swim teams, but with no pool at their school.

VII. ELECTED OFFICIAL REPORTS - [0:48:17]

Office of Hawaiʻi's 1st Congressional District, Congressman Ed Case - [0:48:21]: No representative; Chair Bass announced that Congressman Case was in the district and conducted a Town Hall.

Office of Hawaiʻi State Governor Josh Green - [0:48:47]: No representative present.

- Newsletter: https://drive.google.com/file/d/1XXMyUcWe9sHKYk8zJsPTrW-t02kJQHqc/view?usp=drive_link

Office of the City & County of Honolulu Mayor Rick Blangiardi - [0:48:57]: Tracy Kubota reported the following:

- Responses to questions relating to how long taxpayers will be responsible for the rail.
- Newsletter: https://drive.google.com/file/d/1XA-hsDa5VImIzg94Y0Gm03GXutNJ3kv3/view?usp=drive_link

Questions, comments, and concerns followed - [0:51:25]

- Do you think Rail in Honolulu can be attacked by the Department of Efficiency?
- What's the status of the missing street sing at Puaheahe Street & Wekiu Street?
- Can you replace another in the area at Puaheahe Street & Haalohi Street?
- Do you foresee any tax fees being added to the rail as the other sections are built?

Office of the City & County of Honolulu Council District 8, Councilmember Val Okimoto - [0:54:07]: Aaron reported the following:

- Community and Legislative Updates
- Real Property Tax: https://realproperty.honolulu.gov/
- Important Dates:
  - Thursday, February 20, 2025 – Second-half-year payments due
  - Monday, June 30, 2025 – End of tax year
- Honolulu City Council Meetings: https://www.honolulucitycouncil.org/meetings
- Submit Testimony for Bills/Resolutions: https://hnldoc.ehawaii.gov/hnldoc/testimony
- Complete Streets – Sign up for quarterly reports: https://www8.honolulu.gov/completestreets/
- Feral Chickens: https://www8.honolulu.gov/csd/feral-chickens/
- Newsletter: https://drive.google.com/file/d/1wKpJgkKyHS9V3xoSSQW7gYwVL-d2VR4x/view?usp=drive_link

Questions, comments, and concerns followed - [0:56:31]

- Is there any movement on the fireworks bills?
- Is the Councilmember aware of the animal cruelty issues in the city and the fact that video evidence cannot be used to prosecute offenders?
- Does the Councilmember have any bills in the works regarding animal cruelty?
- Is there an update to the Mililani Police Station Resolution?
- Can you pass on to the Councilmember that we would like to be updated on issue and when testimony is due on the issue?

Office of the City & County of Honolulu Council District 2, Councilmember Matthew Weyer - [0:59:10]: Kelly Anaya reported the following:

- Honored Captain Clifford Kanekawaiola Chillingworth for a lifetime of dedication to ocean safety.
- Closely monitoring the federal funding
- Appropriate funds towards Melemanu Neighborhood Park
- Legislative Updates
- Newsletter: https://drive.google.com/file/d/1uPcOJ9lnsSum60W7MVdsK3n23ohBtb_W/view?usp=drive_link

Questions, comments, and concerns followed - [1:01:59]

- Is that anything that has two wheels and a motor?
- Or does it have to be a something without peddles?
- So if it is an electric bike with two pedals would it be covered or not?
- What is the update on the landfill issue?

Office of State Senate District 18, Senator Michelle Kidani - [1:03:51]: Trevor Nagamine reported the following:

- Highlighted bills that were moving through the session

- Explained that Senate BIll 1931 SD1 is a continuing funding for the Department of Education's donors choose app. The app allows the public to donate school supplies to teachers and the bill is pending its third reading.
- Newsletter: https://drive.google.com/file/d/10gbqa-vKSFcXqIADbkuOuQUJyUrUHri1/view?usp=drive_link

Questions, comments, and concerns followed - [1:05:17]
- What is moving on crossing over regarding fireworks in the senate?
- There was a CIP passed regarding sidewalks along Lanikuhana and Meheula Parkway what's the status?
- Do they have a date yet?
- When are they going to get started?
- When is DOT going to begin work?
- SB227 & SB221 What are the rules of evidence?

Office of State Senate District 17, Senator Donovan Dela Cruz - [1:07:53]: Charles Miller provided updates on bills relating to fireworks and e-bikes.

Questions, comments, and concerns followed - [1:09:56]
- Is there anything in the Fireworks bills that has people addressing the shipping at the docks or flying them in?
- Is there money being appropriated for inspectors at the ports as part of this bill?
- What are the specifics in the changes to the law and what is the required rules of evidence?
- Are you referring to a State task force run by Mike Lambert?

Office of State House District 38, Representative Lauren Matsumoto - [1:14:17]: Representative Matsumoto reported the following:
- Update on the Mauka Emergency Access Road
- Bill package mailer which states the bills that were introduced in the year.
- State Capitol Talking Tour: Thursday, March 20, 2025
- Legislative Update Town Hall: Thursday, April 10, 2025 at Mililani Mauka Elementary at 6:00 p.m.
- Survey Results
- Newsletter: https://drive.google.com/file/d/1hNS1wS58s2_UpIH2tJpHqZ90qeXe_Pt2/view?usp=drive_link

Questions, comments, and concerns followed - [1:18:04]
- What are they going to do to ensure that the new path has a French drain or a water mitigation system?
- Is there a way to move up the paving of the road so it isn't going to be ruined by rains?

Office of State House District 37, Representative Trish La Chica - [1:20:34]: Representative La Chica reported the following:
- Had a community site visit to do outreach with the U.S. Army Garrison, Honolulu Police Department, Ke Ala Hou West Oʻahu, and the State Department of Transportation at the Okinawan Center.
- Attended the Mililani Character Counts Fair
- Almost at the halfway point for legislative session
- Legislative Package
- Survey Results
- Newsletter: https://drive.google.com/file/d/1Xhr3CowGNEshhJuKOLbP6DIarOCkvOx1/view?usp=drive_link

Questions, comments, and concerns followed - [1:26:38]
- What can the government do to regulate the insurance business?
- Do you have any more to say about the fireworks problem?
- What can we do to protect the agencies that deal with vulnerable populations?
- What are we doing to make sure the non-profits that get federal funds can still operate?
- What bills on the floor have tax breaks for the residents?
- Will something meaningful pass from the House this session related to Fireworks?
- Is the second round for GIA?
- But that is based on completion of the budget?
- Will non-profits be notified?
- Are there any bills that will address the cost of living?
- So there might be something coming out after the crossover?
- Are we doing the same thing like teacher housing doing private/public partnerships for pre-K?
- What are you planning on doing with your data in the mailer?
- Did you mail them out to your constituents?
- How many constituents are in your district?

Office of State House District 46, Representative Amy Perruso - [1:46:02]: Representative Amy Perruso reported the following:
- Shared that she does singular polling questions for her community survey
- Bill updates relating to fireworks and landfills
- Moving towards crossover for the legislative session
- Newsletter: https://drive.google.com/file/d/1F5xIATuFdy4O5ezjhqiOp1QxWNbhpazr/view?usp=drive_link

Questions, comments, and concerns followed - [1:53:30]

- Could you add any enlighten on those programs that address vulnerable women?
- Was the budget surplus mythical?

VIII. ANNOUNCEMENTS - [1:57:24]:

Next Board Meeting: The March 26, 2025 meeting is recessed and will meet in April 23, 2025 at 7:30 pm. Location: Mililani High School – H Building.

Broadcast: Videotaping of Board meetings are scheduled to be shown on ʻŌlelo Focus 49, Every Second Thursday at 9:00 am, and on ʻŌlelo Views 54, Every First and Third Saturday at 9:00 am.

IX. ADJOURNMENT - [1:57:59]: The meeting adjourned at 9:29 p.m.

Submitted by: Rachel Cristobal, Neighborhood Assistant, NCO
Reviewed by: Dylan Buck, Community Relationship Specialist, NCO
Finalized by: Sabrina Gustafson, Secretary

MILILANI/ WAIPIʻO/ MELEMANU NEIGHBORHOOD BOARD NO. 25

NEIGHBORHOOD COMMISSION • 925 DILLINGHAM BOULEVARD, SUITE 160 • HONOLULU, HAWAIʻI 96817
PHONE (808) 768-3710 • FAX (808) 768-3711 • WEBSITE http:///www.honolulu.gov/nco

REGULAR MEETING AGENDA
WEDNESDAY, APRIL 23, 2025 at 7:30 P.M.
MILILANI HIGH SCHOOL – H BUILDING
95-1200 MEHEULA PARKWAY, MILILANI, HI 96789
AND VIRTUAL VIA WEBEX

Meeting Link: https://cchnl.webex.com/cchnl/j.php?MTID=m369359c4e541c9a75488c5659a6601ad
Meeting Number: 2482 424 7186
Passcode: NB25 (6225 when dialing from a phone or video system)
Join by Phone: 1-408-418-9388
Access Code: 2482 424 7186

Meeting Materials: https://drive.google.com/drive/folders/1kK0RlwlrULOHw3HFRCLnoiy8MZLoYk8D
Recordings of Board meetings can be found at:
https://www.youtube.com/@NeighborhoodCommissionOffice/search?query=mililani%20waipio

Rules of Speaking: Anyone wishing to speak is asked to raise their hand, and when recognized by the Chair, to address comments to the Chair. All dialogue at the meeting will be conducted by use of the microphone. Those joining the meeting on WebEx are reminded to mute their speakers until they wish to be recognized by the Chair. Anyone not following these rules will be ruled out of order by the Chair. Those providing Presentations to the Board are encouraged to do so via a PowerPoint presentation and provide handouts for the board and the community. The public concerns and comments are limited to three (3) minutes each. Please silence all electronic devices.

Written Testimony: All written testimony must be received in the Neighborhood Commission Office 48 hours prior to the meeting. If within 48 hours, written and/or oral testimony may be submitted directly to the board at the meeting. If submitting written testimony, please note the board and agenda item(s) your testimony concerns. Send to: Neighborhood Commission Office, 530 South King Street, Room 406, Honolulu, HI 96813. Fax: (808) 768-3711. Email: nbtestimony@honolulu.gov

I. CALL TO ORDER – Chair Danielle M. M. Bass
   A. Pledge of Allegiance, Public Notice, Roll Call/Quorum

II. MONTHLY REPORTS (Limited to two (2) minutes each)
   A. Honolulu Fire Department
      (Monthly report; fire and emergency incident statistics for *this community's jurisdiction for* February – April 2025, HFD safety tips reminders, and upcoming events)
   B. Honolulu Police Department
      (Monthly report; crime and incident statistics for *this community's jurisdiction for* February – April 2025, HPD safety tips, reminders, and upcoming events)
   C. U.S. Army – Combat Aviation Brigade, 25th Infantry Division
      (Monthly report; updates on previous and current questions / concerns, safety tips, reminders, and upcoming events)
   D. Board of Water Supply (BWS)
      (Monthly report; water main break incidents and statistics for *this community's jurisdiction for* February – April 2025; BWS tips, reminders, and upcoming events)
   E. State of Hawaiʻi School Facilities Authority (HiSFA)
      (Monthly report and status update of Mililani High School Workforce Housing project; updates on previous and current questions / concerns, reminders, and upcoming events)

III. PRESENTATIONS (Limited to five (5) minutes each)
(Questions specifically related to these presentations to follow, after each presentation.)
   A. Update on New Mililani Straub Clinic Facility Located at Mililani Town Center – Hawaiʻi Pacific Health: Dr Sandra Noone, HPH Chief, Primary Care & Preston Kim, Director Mililani Clinic
   B. City & County of Honolulu Climate Action Plan – City & County of Honolulu Office of Climate Change, Sustainability, and Resiliency

IV. COMMUNITY CONCERNS (Limited to two (2) minutes each)
Report Of Any Events or Concerns Within the Community
Any community member, can come forward and express any comment or concern within decorum.
Please, limit your comments to two (2) minutes each per issue for items not on the agenda.

V. BOARD BUSINESS:
- A. Approval of Meeting Minutes: Wednesday, February 26, 2025 Regular Meeting Minutes

VI. REPORTS OF CHAIRS AND BOARD COMMITTEES (Limited to two (2) minutes each)
- A. Chair's Report
- B. Community Partnerships and Community Outreach – Alex Ozawa, Chair
- C. Community Recognition and Service Awards – Josie Kaʻanehe, Chair
- D. Community Maintenance and Walk Audit – Martina Segura, Chair
  - i. Neighborhood Board Walk Form: https://forms.gle/3YeivtfDyT6VaAi1A
- E. Planning, Zoning, Sustainable Development, and Climate Resilience – Trevor Nagamine, Chair
- F. Transportation & OMPO – Skyler Ross, Chair
- G. Military Affairs and Emergency Management – Dennis Kim, Chair
- H. Health, Houselessness, and Human Services – Darsha Lee, Chair
- I. Parks and Recreation & Patsy T. Mink Central Oahu Regional Park – Sabrina Gustafson, Chair
- J. Education – Marilyn Lee, Chair

VII. ELECTED OFFICIALS REPORTS (Limited to two (2) minutes each)
(Monthly reports given by the following elected officials or their designee; updates on previous or current questions / concerns)
- A. Office of Hawaiʻi's 1st Congressional District, Congressman Ed Case – Nestor Garcia
- B. Office of Hawaiʻi State Governor Josh Green – Toni Schwartz, Governor's Representative
- C. Office of the City & County of Honolulu Mayor Rick Blangiardi – Tracy Kubota, Mayor's Representative
- D. Office of the City & County of Honolulu Council District 8, Councilmember Val Okimoto
- E. Office of the City & County of Honolulu Council District 2, Councilmember Matthew Weyer
- F. Office of State Senate District 18, Senator Michelle Kidani
- G. Office of State Senate District 17, Senator Donovan Dela Cruz
- H. Office of State House District 38, Representative Lauren Matsumoto
- I. Office of State House District 37, Representative Trish La Chica
- J. Office of State House District 46, Representative Amy Perruso

VIII. ANNOUNCEMENTS
- A. Neighborhood Board Elections: The 2025 Neighborhood Board Election voting will start on Friday, April 25, 2025 at 7:45 a.m. HST and runs to Friday, May 16, 2025 at 11:59 p.m. HST.
- B. **City and County of Honolulu and Hawaiʻi Foodbank are Partnering to Fight Against Hunger:** Neighborhood Assistant Rachel Cristobal will be collecting donated canned goods at tonight's meeting.
- C. Next Board Meeting: The next scheduled board meeting will be held on Wednesday, May 28, 2025, at 7:30 pm. Location: Mililani High School – H Building.
- D. Broadcast: Videotaping of Board meetings are scheduled to be shown on ʻŌlelo Focus 49, Every Second Thursday at 9:00 am, and on ʻŌlelo Views 54, Every First and Third Saturday at 9:00 am.

IX. ADJOURNMENT

A mailing list is maintained for interested persons and agencies to receive this Board's agenda and minutes. Additions, corrections, and deletions to the mailing list may be directed to the Neighborhood Commission Office (NCO) at Kapālama Hale, 925 Dillingham Boulevard, Suite 160, Honolulu, Hawaiʻi 96817; Telephone (808) 768-3710 Fax (808) 768-3711; or Email nco@honolulu.gov. Agendas and minutes are also available on the internet at www.honolulu.gov/nco

If you need an auxiliary aid/service or other accommodation due to a disability or an interpreter for a language other than English, please call the Neighborhood Commission Office at (808) 768-3710 between 8:00 a.m. and 4:00 p.m. or send an email to nco@honolulu.gov at least three (3) business days before the scheduled meeting. It may not be possible to fulfill requests received after this date.

Meeting Location: The monthly meetings of the Mililani-Waipiʻo-Melemanu Neighborhood Board #25 are held in the "H Building" on the Mililani High School campus, as indicated on the map below. The H Building is circled on the map, and parking is available in the upper campus parking lot near the intersection of Meheula Parkway and Makaimoimo Street. For convenience, parking near the Mililani High School Cafeteria is recommended.

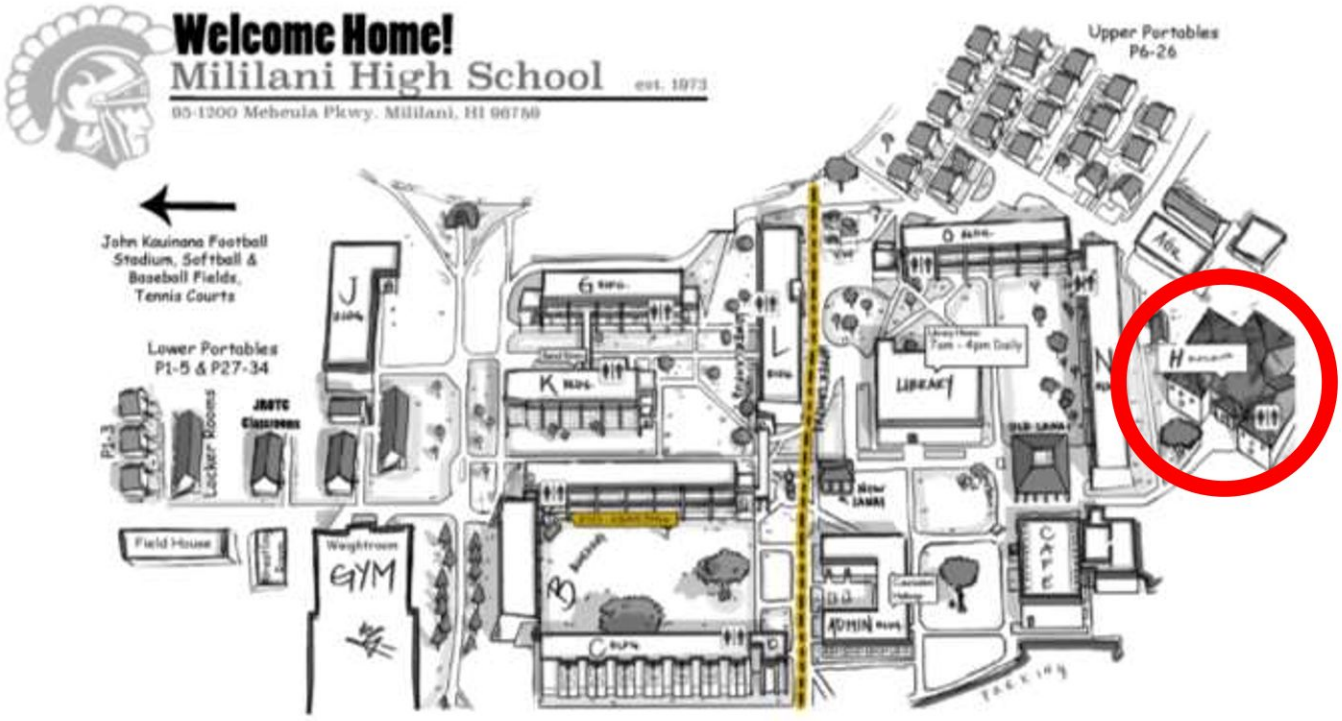
Welcome Home!
Mililani High School
est. 1973
95-1200 Meheula Pkwy. Mililani, HI 96789
John Kauinana Football Stadium, Softball & Baseball Fields, Tennis Courts
Lower Portables P1-5 & P27-34
JROTC Classrooms
Locker Rooms
Field House
Weightroom
GYM
Upper Portables P6-26
LIBRARY
CAFE
ADMIN

MILILANI - **WAIPIʻO** - MELEMANU NEIGHBORHOOD BOARD NO. 25

c/o NEIGHBORHOOD COMMISSION | 925 DILLINGHAM BOULEVARD SUITE 160 | HONOLULU, HAWAIʻI, 96817
PHONE (808) 768-3710 | FAX (808) 768-3711 | WEBSITE: http://www.honolulu.gov/nco

REGULAR MEETING WRITTEN SUMMARY FOR VIDEO RECORD
WEDNESDAY, APRIL 23, 2025 - 7:30 P.M.
MILILANI HIGH SCHOOL H-BUILDING – 95-1200 MEHEULA PKWY, MILILANI, HI 96789
AND VIA WEBEX

Video recording of this meeting can be found at: https://www.youtube.com/watch?v=hcYo-FrtgGc

Google Drive Link: https://drive.google.com/drive/folders/1kK0RlwlrULOHw3HFRCLnoiy8MZLoYk8D

I. CALL TO ORDER – [0:00:17]

Chair Danielle Bass called the meeting to order at 7:30 p.m. The Board recited the Pledge of Allegiance. Chair Bass provided the rules for the Neighborhood Board meeting - [0:01:09]. Roll call was conducted – [0:01:54] and quorum was established with 18 members present [0:03:27]. Note: This 23-member Board requires 12 members to establish a quorum and to take official Board action.

Board Members Present: Danielle Bass, Josie Kaʻanehe, Dennis Kim, Marilyn Lee, Sabrina Gustafson, Leslie Among, Michael Dau, Elise Carmody, Emil Svrcina, Darsha Lee, Brandon Kinard, Sharon Williams, Skyler Ross, Martina Segura, Ed Flores, Alex Ozawa, Mary Smart, Ann Freed, Katherine Kupukaʻa (joined at 8:04 p.m.), and Rodney Park (joined at 8:12 p.m.).

Board Members Absent: Rudy Rana, Trevor Nagamine, and Kurumi Kaapana-aki.

Guests: Captain Tateishi (Honolulu Fire Department); Lieutenant Scott Vierra (Honolulu Police Department); Captain Block (U.S. Army); Kathleen Pahinui (Board of Water Supply); Toni Schwartz (Governor Josh Green); Tracy Kubota (Mayor Rick Blangiardi); Dr. Kealoha Fox (Office of Climate Change, Sustainability and Resiliency); Chelsea Gonzales (Councilmember Matt Weyer); Representative Amy Perruso; Representative Lauren Matsumoto; Charles Miller (Senator Donovan Dela Cruz); Representative Trish La Chica; Cheri Nakamura (State of Hawaiʻi School Facilities Authority); Dr. Sandra Noone, Preston Kim (Hawaiʻi Pacific Health); Ken Inouye, Keoni, Sierra Martin, Tony Velasco, Robin Nelson, Walton A. (Residents and Guests); Rachel Cristobal (Neighborhood Commission Office). Note: Name not included if not legible or stated for the record. There were approximately 44 total participants.

II. MONTHLY REPORTS - [0:03:37]

Honolulu Fire Department (HFD) - [0:03:37]: Captain Tateishi provided the monthly statistics for the month of March 2025 along with the April 2025 fire safety tip regarding evacuations.

- More information: https://fire.honolulu.gov/
- Report: https://drive.google.com/file/d/1fGpXbhDNd7Ceea9c7-yGQY2racRSPZPn/view?usp=drive_link

Questions, comments, and concerns followed - [0:05:40]

- How many of those are critical where the patient needs to be taken to the ER?
- So you don't know which are critical calls and which are nuisance?
- Of the wildfires were any of those due to fireworks?
- Can you find out?

Honolulu Police Department (HPD) - [0:07:05]: Lieutenant Vierra provided the monthly statistics from March 2025 to April 2025. The safety tips for the month were regarding how to make our vehicles safer.

Questions, comments, and concerns followed - [0:09:08]

- Do you have to have your registration, safety inspection ect in the vehicle?
- Is that a County or State law that requires you to do that?

Military – Combat Aviation Brigade, 25th Infantry Division - [0:11:30]: Captain Block reported the following:

- Hiring fair on Tuesday, June 24, 2025 at Kapolei High School and listed the various departments that are hiring.
- Final Environmental Impact Statement
- Details on the comment period and how to submit comments by phone/email

Questions, comments, and concerns followed - [0:16:28]

- That EIS is for Pohakuloa on the Big Island correct?
- Does the army have any land clean up plans for leased lands?
- What type of clean up plans does the leadership have for lands after their training exercises?
- Are there any renewal cycles on the lease?
- How many years will it be renewed for?
- In the past how many years was the lease renewed for?
- Does the EIS include the deactivation of unexploded ordinances on that land?
- When is the deadline for comments?

- Do you have any further updates regarding the servicemember that was found in their car on Wheeler in the parking lot?
- How do you submit comments?
- Is there a separate way to submit comments?
- Could you restate the email for the record?

Board of Water Supply (BWS) - [0:21:24]: Kathleen Pahinui reported the following:
- No main breaks
- Detect a Leak Week: The Board of Water Supply is offering free dye for toilets.

State of Hawaiʻi School Facilities Authority (HiSFA) - [0:22:33]: Cheri Nakamura reported the following:
- Pending on the legislation session to finish so that there can be clarity on what resources are available.

Questions, comments, and concerns followed - [0:23:29]
- Has there been any follow up information on the cost to move the location?

III. PRESENTATIONS - [0:24:11]

Update on New Mililani Straub Clinic Facility Located at Mililani Town Center – Hawaiʻi Pacific Health - [0:24:11]: Dr. Sandra Noone and Director Preston Kim provided a presentation on the new Mililani Straub clinic facility located at Mililani Town. The presentation provided the following: building floor plans; services that will be provided; and hiring opportunities.
- Presentation: https://docs.google.com/presentation/d/1pMYIxY45OmcZpAwyBsQpPc2vxcRFgjcI/edit?usp=drive_link&ouid=101205618811575423434&rtpof=true&sd=true
- Flyers: https://drive.google.com/file/d/1JtA8IXBeURRm238IUyNVciMcfmv0cUKY/view?usp=drive_link

Member Ross left at 7:59 p.m.; 17 members present.

Questions, comments, and concerns followed - [0:32:07]
- Are we looking in the future that we would be treated by AI?
- Will there be more or less human interaction?
- Which is the location of the front entry way, facing the theater or road?
- Are the people who get accepted in Mililani or the whole system?
- Will you be having emergency room care at this facility?
- How many dermatologists do you have?
- Is your parking private?
- Can anyone else park in your lot?
- When does the AHI program begin?
- Is there any inpatient mental health care at this facility?
- Did you build this facility on leased land or do you own the land?
- Will the current clinic be closed down or will it continue to be used?
- What will be the general hours of the clinic?

Member Kupukaʻa joined at 8:04 p.m.; 18 members present.
Member Segura left at 8:06 p.m.; 17 members present.
Member Park joined at 8:12 p.m.; 18 members present.

City & County of Honolulu Climate Action Plan - [0:42:20]: Dr. Kealoha Fox announced that The City is updating its Climate Action Plan (CAP), originally adopted in 2021, with new goals to boost renewable energy and cut greenhouse gas emissions by 2030. The revised plan, expected to go to the City Council by early next year, is being shaped through community input and focuses on five areas: transportation, energy, waste, sustainable communities, and food systems. A draft is planned for July, and public workshops are being held across Oʻahu, including Tuesday, May 13, 2025 at Pearl City Public Library and Monday, June 9, 2025 at Waialua Elementary.
- Climate Action Plan Community Workshops: https://drive.google.com/file/d/1OQuDJQapBegeoNI0pEL-TYQnREI6Owu9/view?usp=drive_link

Questions, comments, and concerns followed - [0:46:58]
- With DODGE going on do you get any information if those departments like yours will be cut?
- What are the dates and locations for the events at the end of your presentation?
- Will there be a portion that talks about affordability?

IV. COMMUNITY CONCERNS - [0:51:24]: None.

V. BOARD BUSINESS - [0:51:55]

Wednesday, February 26, 2025 Regular Meeting Minutes - [0:52:00]: Member Gustafson asked the Board if there were any corrections or any revisions that they would like to make. Hearing no amendments. The Wednesday, February 26, 2025 regular meeting minutes were ADOPTED as written [0:52:22].

VI. REPORTS OF CHAIRS AND BOARD COMMITTEES - [0:52:29]:

- Chair's Report - [0:52:34]: No report.
- Community Partnerships and Community Outreach - Alex Ozawa - [0:52:58]: Shared a brief report about Instagram and Facebook posts and asked to be notified if there are things such as outreaches to be posted.
- Community Recognition and Service Awards - Josie Kaʻanehe - [0:53:34]: No report.
- Community Maintenance and Walk Audit - Martina Segura - [0:53:45]: No representative present, but Chair Bass reminded the community to continue to submit if there are signs missing and etc. through the walk form.
    - Neighborhood Board Walk Form: https://forms.gle/3YeivtfDyT6VaAi1A
- Planning, Zoning, Sustainable Development, and Climate Resilience - Trevor Nagamine - [0:54:15]: No representative present.
- Transportation & OMPO - Skyler Ross - [0:54:22]: No representative present.
- Military Affairs and Emergency Management - Dennis Kim - [0:54:30]: No report.
- Health, Houselessness, and Human Services - Darsha Lee - [0:54:54]: Provided a brief report on the Koa Vista application.

Member Ozawa left at 8:25 p.m.; 17 members present.

- Parks and Recreation & Patsy T. Mink Central Oahu Regional Field - Sabrina Gustafson - [0:55:34]: Informed that The Department of Parks and Recreation had sent a letter informing that a study will be conducted on City parks to be dog friendly. Member Gustafson and Chair Bass are planning to request for a presentation.

Questions, comments, and concerns followed - [0:56:24]

- There is construction going on at CORP what is that about?

- Education - Marilyn Lee - [0:57:32]: Member Marilyn Lee reported the following: Mililani Uka Elementary's 50th anniversary; Lion King Jr. performance; Golden Scholars Night; and graduation.
    - Mililani Public Library Newsletter: https://drive.google.com/file/d/1Q5KUrHY9BgTeYfWqp0buQBj2Obr4Se72/view?usp=drive_link
    - Summer Reading Challenge: https://drive.google.com/file/d/1JImchQUk27jp_vJVSDjuW2nD7JIwjggp/view?usp=drive_link

VII. ELECTED OFFICIAL REPORTS - [1:00:40]

Office of Hawaiʻi's 1st Congressional District, Congressman Ed Case - [1:00:43]: No representative present.

Office of Hawaiʻi State Governor Josh Green - [1:00:55]: Toni Schwartz reported the following:

- Responses to follow ups regarding the Kipapa Bridge's cracks and the missing historic sign
- Newsletter: https://drive.google.com/file/d/1xXAUQwl4D6DQ3syYnMinI14M3_0-mLNX/view?usp=drive_link

Questions, comments, and concerns followed - [1:03:10]

- Can you have someone do a traffic study regarding the traffic/lines on Kam Highway after Kuahelani Avenue near the Mililani Auto Repair Business?
- Can we put together a list of places that conduct safety inspections to publicize?
- When will the State begin the CIP of a sidewalk along Kamehameha Highway from Kuahelani Avenue to Lanikuhana Avenue including the construction of a sidewalk from Meheula Pakway to Lanikuhana Avenue?

Office of the City & County of Honolulu Mayor Rick Blangiardi - [1:08:02]: Tracy Kubota reported the following: Town Hall happening tomorrow night; follow up responses regarding taxpayer funding, future of rail system, speed humps request on Lanikuhana Avenue between Kamari Street and Luaoalai Place, and the request for missing street signs.

Questions, comments, and concerns followed - [1:12:13]

- Who can initiate an audit of HART?
- Can the bathroom at District Park be spruced up?
- Are they any plans to renovate the playground at District Park?
- When will the City be opening the bus only dedicated lane in front of Pearl Highlands?

Office of the City & County of Honolulu Council District 8, Councilmember Val Okimoto - [1:14:57]:

- Full council meetings occurred in March and April 2025. Next meeting will be on Wednesday, May 14, 2025.
- Legislative updates on Bill 61 (prohibiting wheelies) and Bill 60 (sewer fees).
- Special CD2 budget meeting in May 2025
- Mililani Uka Elementary's 50th Anniversary

- Responded to follow ups from the previous meeting regarding fireworks, new police substation in Mililani, and bills relating to animal cruelty.
- Newsletter: https://static1.squarespace.com/static/6098c5bb75e480679bd2fab3/t/67f6c0a25d7b256aaf5bfa82/1744224442701/April+NL%28Website%29.pdf

Questions, comments, and concerns followed - [1:22:09]
- Is the new Fire Department helicopter online yet?
- How much longer will it take?
- If you remove feral cats and chickens from the property, is it considered animal cruelty?
- So, I should ask the Humane Society?
- Is there a significance to the 25lbs for Bill 7?
- Regarding the fireworks bill you mentioned are they still taking testimony?

Member Carmody left at 8:56 p.m.; 16 members present.

Office of the City & County of Honolulu Council District 2, Councilmember Matthew Weyer - [1:26:02]: Chelsea Gonzales reported the following:
- Bill 18 CD 1: Restricting the sale of single use plastic bottles and vending machines has passed 3rd reading.
- Monitoring the Landfill House Bill 969 that's going to conference

Office of State Senate District 18, Senator Michelle Kidani - [1:28:38]: No representative present.
- Newsletter: https://drive.google.com/file/d/1WZVJRja90QnOpjlllXhzVu7swEADzxQI/view?usp=drive_link

Office of State Senate District 17, Senator Donovan Dela Cruz - [1:28:55]: Charles Miller reported the following:
- Session 2025: Currently in conference committees
- Provided legislative updates relating to biosecurity, fireworks, e-bikes, and the landfill.

Questions, comments, and concerns followed - [1:31:13]
- Are there any bills in the Senate that will help with the stop gap people in Hawaii?
- Are there any current bills still alive regarding hotlines and mental health awareness?

Office of State House District 38, Representative Lauren Matsumoto - [1:35:13]: Representative Matsumoto reported the following:
- Midsession survey
- Update on Mililani Emergency Access Road
- Legislative updates on House Bill 26 relating using pre-tax dollars to save for a down payment.
- Updates on Resolution 131 and 137 both relating to Kipapa Elementary
- Talk and Tour
- Legislative Town Hall
- Newsletter: https://drive.google.com/file/d/1EL5GSO3Bchp1vzxSPVrkoAtHffGAtGXl/view?usp=drive_link

Questions, comments, and concerns followed - [1:39:32]
- Are there any Bills in the House that would help with the stop gap?
- Which crosswalks at Kipapa are you talking about?
- Why would the State be involved?

Office of State House District 37, Representative Trish La Chica - [1:45:26]: Representative La Chica reported the following:
- Session convenes at 6:30 p.m.
- Legislative updates regarding school bus prices and expanding the red-light camera program.
- Talk Story: On Thursday, May 1, 2025 starts at 6:00 p.m. relating to Transportation. Provided who and which departments would be there. Wahiawā Community Health Center will do a vaccine presentation.
- Community updates relating to Town Hall and Queens Medical Center.
- Measles update
- Percentage rate on those that did not get a vaccine due to their religion.
- Provided information on HB 1300 relating to free breakfast and lunch.
- Newsletter: https://drive.google.com/file/d/1qbeVs33o2LViVtOlqyS_sWN4RzKVxCap/view?usp=drive_link

Questions, comments, and concerns followed - [1:52:59]
- What can be done to increase the non-compliance of reporting of vaccinated people?
- Did they send out the information on the availability of the shots in Wahiawa?

Office of State House District 46, Representative Amy Perruso - [1:55:48]: Representative Amy Perruso reported the following:
- HB 969 and SB 438 relating to landfill.
- Planning a community forum at Mililani High School to address concerns which also will include concerns that Member Darsha Lee brought up.

- Didn't pass any progressive tax revenue generation.
- Newsletter: https://drive.google.com/file/d/10Rgr7-k_ifHsrKmmKdHJhr8S8wbB1chq/view?usp=drive_link

Questions, comments, and concerns followed - [1:59:00]

- Why did you vote NO on HB 698?
- If the bill passes, will it go into effect in July 2050?
- If July 2025 is correct, why is it so long for it to take effect?
- California Avenue where it crosses Cypress Avenue we can't see the crosswalk can it be restriped?
- Chelsea can you make note of that as well?

VIII. ANNOUNCEMENTS - [2:03:19]:

Neighborhood Board Elections: The 2025 Neighborhood Board Election voting will start on Friday, April 25, 2025 at 7:45 a.m. HST and runs to Friday, May 16, 2025 at 11:59 p.m. HST.

City and County of Honolulu and Hawaiʻi Foodbank are Partnering to Fight Against Hunger: Neighborhood Assistant Rachel Cristobal will be collecting donated canned goods at tonight's meeting.

Next Board Meeting: The next scheduled board meeting will be held on Wednesday, May 28, 2025, at 7:30 pm. Location: Mililani High School – H Building.

Broadcast: Videotaping of Board meetings are scheduled to be shown on ʻŌlelo Focus 49, Every Second Thursday at 9:00 am, and on ʻŌlelo Views 54, Every First and Third Saturday at 9:00 am.

IX. ADJOURNMENT - [2:04:40]: The meeting adjourned at 9:34 p.m.

Submitted by: Rachel Cristobal, Neighborhood Assistant, NCO
Reviewed by: Dylan Whitsell, Deputy, NCO
Finalized by: Sabrina Gustafson, Secretary

MILILANI/ WAIPIʻO/ MELEMANU NEIGHBORHOOD BOARD NO. 25

NEIGHBORHOOD COMMISSION • 925 DILLINGHAM BOULEVARD, SUITE 160 • HONOLULU, HAWAIʻI 96817
PHONE (808) 768-3710 • FAX (808) 768-3711 • WEBSITE http:///www.honolulu.gov/nco

REGULAR MEETING AGENDA
WEDNESDAY, MAY 28, 2025 at 7:30 P.M.
MILILANI HIGH SCHOOL – H BUILDING
95-1200 MEHEULA PARKWAY, MILILANI, HI 96789
AND VIRTUAL VIA WEBEX

Meeting Link: https://cchnl.webex.com/cchnl/j.php?MTID=m369359c4e541c9a75488c5659a6601ad
Meeting Number: 2482 424 7186
Passcode: NB25 (6225 when dialing from a phone or video system)
Join By Phone: 1-408-418-9388
Access Code: 2482 424 7186

Meeting Materials: https://drive.google.com/drive/folders/1kK0RlwlrULOHw3HFRCLnoiy8MZLoYk8D
Recordings of Board meetings can be found at: https://www.youtube.com/@NeighborhoodCommissionOffice

Rules of Speaking: Anyone wishing to speak is asked to raise their hand, and when recognized by the Chair, to address comments to the Chair. All dialogue at the meeting will be conducted by use of the microphone. Those joining the meeting on WebEx are reminded to mute their speakers until they wish to be recognized by the Chair. Anyone not following these rules will be ruled out of order by the Chair. Those providing Presentations to the Board are encouraged to do so via a PowerPoint presentation and provide handouts for the board and the community. The public concerns and comments are limited to three (3) minutes each. Please silence all electronic devices.

Written Testimony: All written testimony must be received in the Neighborhood Commission Office 48 hours prior to the meeting. If within 48 hours, written and/or oral testimony may be submitted directly to the board at the meeting. If submitting written testimony, please note the board and agenda item(s) your testimony concerns. Send to: Neighborhood Commission Office, 530 South King Street, Room 406, Honolulu, HI 96813. Fax: (808) 768-3711. Email: nbtestimony@honolulu.gov

I. CALL TO ORDER – Chair Danielle M. M. Bass
   A. Pledge of Allegiance, Public Notice, Roll Call/Quorum

II. MONTHLY REPORTS (Limited to two (2) minutes each)
   A. Honolulu Fire Department
      (Monthly report; fire and emergency incident statistics for *this community's jurisdiction for* April – May 2025, HFD safety tips reminders, and upcoming events)
   B. Honolulu Police Department
      (Monthly report; crime and incident statistics for *this community's jurisdiction for* April – May 2025, HPD safety tips, reminders, and upcoming events)
   C. U.S. Army – Combat Aviation Brigade, 25th Infantry Division
      (Monthly report; updates on previous and current questions / concerns, safety tips, reminders, and upcoming events)
   D. Board of Water Supply (BWS)
      (Monthly report; water main break incidents and statistics for *this community's jurisdiction for* April – May 2025; BWS tips, reminders, and upcoming events)
   E. State of Hawaiʻi School Facilities Authority (HiSFA)
      (Monthly report and status update of Mililani High School Workforce Housing project; updates on previous and current questions / concerns, reminders, and upcoming events)

III. PRESENTATIONS (Limited to five (5) minutes each)
(Questions specifically related to these presentations to follow, after each presentation.)
   A. **Queen's Wahiawā Update** – The Queen's Health Systems

   B. Dog Friendly City Parks Proposal – Nathan Serota, City & County of Honolulu Department of Parks & Recreation

IV. COMMUNITY CONCERNS (Limited to two (2) minutes each)
Report Of Any Events or Concerns Within the Community
Any community member, can come forward and express any comment or concern within decorum.
Please, limit your comments to two (2) minutes each per issue for items not on the agenda.

V. BOARD BUSINESS:
- A. Board Member Kurumi Kaapana-Aki – 3 Meeting Absence
- B. Board Member Rudy Rana – 3 Meeting Absence
- C. Approval of Meeting Minutes: Wednesday, April 23, 2025 Regular Meeting Minutes

VI. REPORTS OF CHAIRS AND BOARD COMMITTEES (Limited to two (2) minutes each)
- A. Chair's Report
- B. Community Partnerships and Community Outreach – Alex Ozawa, Chair
- C. Community Recognition and Service Awards – Josie Kaʻanehe, Chair
- D. Community Maintenance and Walk Audit – Martina Segura, Chair
  - i. Neighborhood Board Walk Form: https://forms.gle/3YeivtfDyT6VaAi1A
- E. Planning, Zoning, Sustainable Development, and Climate Resilience – Trevor Nagamine, Chair
- F. Transportation & OMPO – Skyler Ross, Chair
- G. Military Affairs and Emergency Management – Dennis Kim, Chair
- H. Health, Houselessness, and Human Services – Darsha Lee, Chair
- I. Parks and Recreation & Patsy T. Mink Central Oahu Regional Park – Sabrina Gustafson, Chair
- J. Education – Marilyn Lee, Chair

VII. ELECTED OFFICIALS REPORTS (Limited to two (2) minutes each)
(Monthly reports given by the following elected officials or their designee; updates on previous or current questions / concerns)
- A. Office of Hawaiʻi's 1st Congressional District, Congressman Ed Case – Nestor Garcia
- B. Office of Hawaiʻi State Governor Josh Green – Toni Schwartz, Governor's Representative
- C. Office of the City & County of Honolulu Mayor Rick Blangiardi – Tracy Kubota, Mayor's Representative
- D. Office of the City & County of Honolulu Council District 8, Councilmember Val Okimoto
- E. Office of the City & County of Honolulu Council District 2, Councilmember Matthew Weyer
- F. Office of State Senate District 18, Senator Michelle Kidani
- G. Office of State Senate District 17, Senator Donovan Dela Cruz
- H. Office of State House District 38, Representative Lauren Matsumoto
- I. Office of State House District 37, Representative Trish La Chica
- J. Office of State House District 46, Representative Amy Perruso

VIII. ANNOUNCEMENTS
- A. Next Board Meeting: The next scheduled board meeting will be held on Wednesday, June 25, 2025, at 7:30 pm. Location: Mililani High School – H Building.
- B. Broadcast: Videotaping of Board meetings are scheduled to be shown on ʻŌlelo Focus 49, Every Second Thursday at 9:00 am, and on ʻŌlelo Views 54, Every First and Third Saturday at 9:00 am.

IX. ADJOURNMENT

A mailing list is maintained for interested persons and agencies to receive this board's agenda and minutes. Additions, corrections, and deletions to the mailing list may be directed to the Neighborhood Commission Office (NCO) at Kapālama Hale, 925 Dillingham Boulevard, Suite 160, Honolulu, HI 96817, by telephone on (808) 768-3710, fax (808) 768-3711, or e-mailing nco@honolulu.gov. Agenda documents and minutes are also available online at http://www.honolulu.gov/nco/boards.html

If you need an auxiliary aid/service or other accommodation due to a disability or an interpreter for a language other than English, please call the Neighborhood Commission Office at (808) 768-3710 between 8:00 a.m. and 4:00 p.m. or send an email to nco@honolulu.gov at least three (3) business days before the scheduled meeting. It may not be possible to fulfill requests received after this date.

Meeting Location: The monthly meetings of the Mililani-Waipiʻo-Melemanu Neighborhood Board #25 are held in the "H Building" on the Mililani High School campus, as indicated on the map below. The H Building is circled on the map, and parking is available in the upper campus parking lot near the intersection of Meheula Parkway and Makaimoimo Street. For convenience, parking near the Mililani High School Cafeteria is recommended.

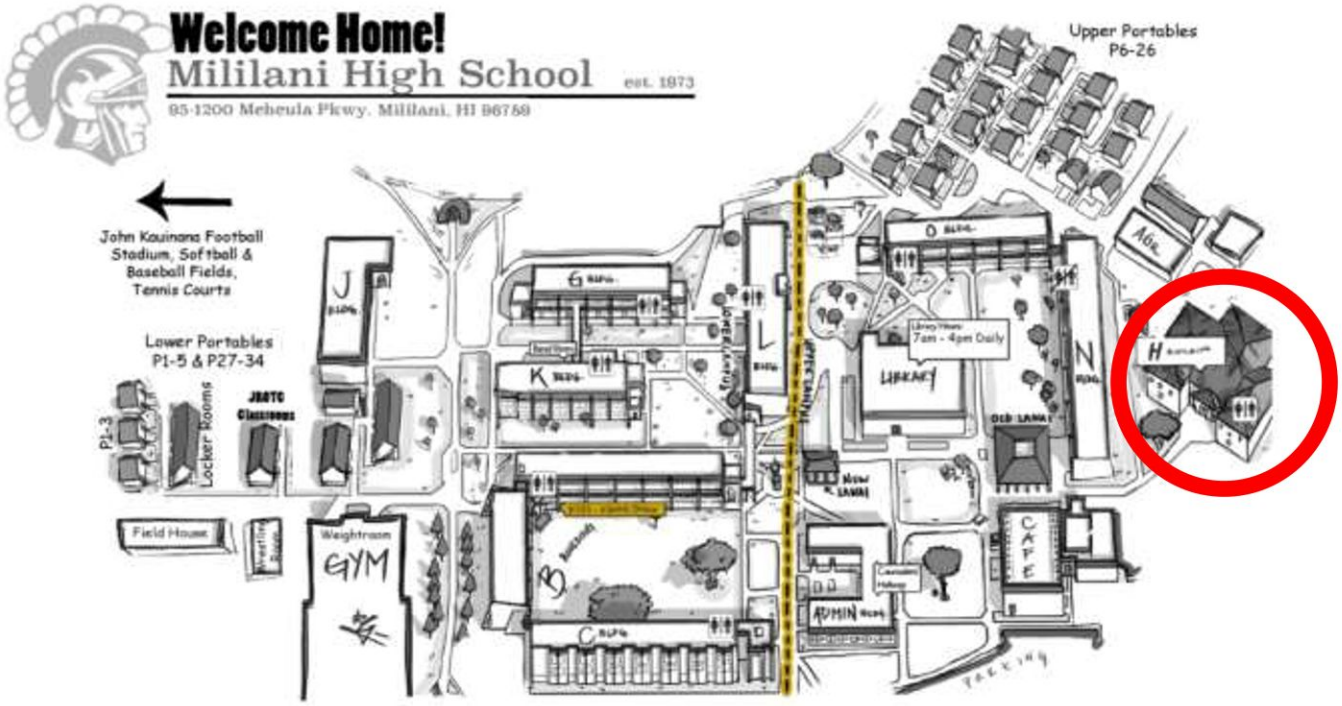
Welcome Home!
Mililani High School
est. 1973
95-1200 Meheula Pkwy. Mililani, HI 96789
Upper Portables
P6-26
John Kauinana Football
Stadium, Softball &
Baseball Fields,
Tennis Courts
Lower Portables
P1-5 & P27-34
P1-3
Locker Rooms
JROTC
Classrooms
Field House
Weightroom
GYM
LIBRARY
7am - 4pm Daily
OLD LANAI
NEW LANAI
CAFE
ADMIN
PARKING

MILILANI - **WAIPIʻO** - MELEMANU NEIGHBORHOOD BOARD NO. 25

c/o NEIGHBORHOOD COMMISSION | 925 DILLINGHAM BOULEVARD SUITE 160 | HONOLULU, HAWAIʻI, 96817
PHONE (808) 768-3710 | FAX (808) 768-3711 | WEBSITE: http://www.honolulu.gov/nco

REGULAR MEETING WRITTEN SUMMARY FOR VIDEO RECORD
WEDNESDAY, MAY 28, 2025 - 7:30 P.M.
MILILANI HIGH SCHOOL H-BUILDING – 95-1200 MEHEULA PKWY, MILILANI, HI 96789
AND VIA WEBEX

Video recording of this meeting can be found at: https://www.youtube.com/watch?v=8YlF9g_TjzA

Google Drive Link: https://drive.google.com/drive/folders/1kK0RlwlrULOHw3HFRCLnoiy8MZLoYk8D

I. CALL TO ORDER – [0:00:01]

Chair Danielle Bass called the meeting to order at 7:30 p.m. The Board recited the Pledge of Allegiance. Chair Bass provided the rules for the Neighborhood Board meeting - [0:01:10]. Roll call was conducted – [0:01:51] and quorum was established with 15 members present [0:03:23]. Note: This 23-member Board requires 12 members to establish a quorum and to take official Board action.

Board Members Present: Danielle Bass, Josie Kaʻanehe, Dennis Kim, Rudy Rana, Trevor Nagamine, Marilyn Lee, Sabrina Gustafson, Leslie Among, Michael Dau, Elise Carmody, Brandon Kinard, Skyler Ross, Ed Flores, Mary Smart, Ann Freed, Kurumi Kaapana-aki (joined at 7:43 p.m.), Katherine Kupukaʻa (joined at 8:05 p.m.), Rodney Park (joined at 8:12 p.m.), Darsha Lee (joined at 8:14 p.m.), and Sharon Williams (joined at 8:22 p.m.).

Board Members Absent: Alex Ozawa, Emil Svrcina, and Martina Segura.

Guests: Captain Shaun Wray (Honolulu Fire Department); Lieutenant Baysa (Honolulu Police Department); Specialist Charles Clark (U.S. Army); Kathleen Pahinui (Board of Water Supply); Toni Schwartz (Governor Josh Green); Tracy Kubota (Mayor Rick Blangiardi); Aaron Wilson (Councilmember Val Okimoto); Kelly Anaya (Councilmember Matt Weyer); Yvonne Yoro (Representative Amy Perruso); Charles Miller (Senator Donovan Dela Cruz); Representative Trish La Chica; Cheri Nakamura (State of Hawaiʻi School Facilities Authority); Nate Serota (Department of Parks and Recreation); Nestor Garcia (Congressman Ed Case); Robin Kalohelani (Queen's Medical Center West & Wahiawā); Bev Harbin, JG, Keith, Ken Inouye, Mike Buck, Kate Ozawa, Jocelyn Roberts, Robin Nelson (Residents and Guests); Rachel Cristobal (Neighborhood Commission Office). Note: Name not included if not legible or stated for the record. There were approximately 46 total participants.

II. MONTHLY REPORTS - [0:03:33]

Honolulu Fire Department (HFD) - [0:03:41]: Captain Wray provided the following:

- The monthly statistics for the month of May 2025
- Fire safety tip regarding home fire sprinklers
- Provided responses for concerns that were raised from the previous meeting regarding how many patients out of the 81 medical calls were sent to the Emergency Room and how many of the brushfires were started by fireworks.
- More information: https://fire.honolulu.gov/
- Report: https://drive.google.com/file/d/12bDXzClD0-LB00xAY0wT2Qwm2EmOGLJF/view?usp=drive_link

Honolulu Police Department (HPD) - [0:06:39]: Lieutenant Baysa provided the following:

- Introduction to Sergeant Fia
- The monthly statistics for the month of May 2025
- Safety tip reminder that everyone should be aware of their surroundings since it is graduation season.
- Responded to a question that was asked at the previous meeting regarding if it was a County or State law to have the vehicle registration in the car.

Questions, comments, and concerns followed - [0:08:39]

- Can you provide additional details about the dead body found in the Mililani Mauka park?

Military – Combat Aviation Brigade, 25th Infantry Division - [0:09:32]: Specialist Charles Clark reported the following:

- Hiring fair on Tuesday, June 24, 2025 at Kapolei High School.
- Mentioned the various departments that were hiring.
- May 2025's training advisory was published and provided the link.
- Celebrating the Armyʻs 250th birthday on Thursday, June 12, 2025.

Member Kaapana-aki joined at 7:43 p.m.; 16 members present.

Questions, comments, and concerns followed - [0:15:08]

- With the EIS and UXO lying around how often is EOD sent out to look for the UXO?
- Can you get us answers on cleaning up ordinances?

Board of Water Supply (BWS) - [0:16:50]: Kathleen Pahinui reported the following:

- No main breaks
- Water conservation tips
- Report: https://drive.google.com/file/d/1sL74-w2Ap38Li3OD7lRHSWA63baySbcp/view?usp=drive_link

Questions, comments, and concerns followed - [0:17:50]
- When we report a water break what information is needed to track it down?
- Does it matter the time of day the break occurs?
- Does a cross street work for identification purposes?
- Where do I send the photos?

State of Hawaiʻi School Facilities Authority (HiSFA) - [0:19:06]: Cheri Nakamura reported the following:
- Legislature approved 2 million appropriations for the teacher workforce housing project.
- Expressed gratitude to the legislators that showed their support on passing House Bill 329 HD2 SD2 CD1 relating to the school facilities authority.
- Also expressed gratitude to Chair Bass and the Neighborhood Board for their continued support.

Questions, comments, and concerns followed - [0:20:24]
- Is the final location where they are putting it on the campus decided yet?
- The one where the agriculture site is done?
- When will the new rendering of the plans be available to the community?

III. PRESENTATIONS - [0:21:37]

Queen's Wahiawā Update - [0:21:42]: Robin Kalohelani provided a presentation on updates on the Wahiawā Queens Medical Center such as the decrease of workers pressing the emergency button when patients are aggressive. Other statistics included the decrease in items that had to be removed from the hospital such as drugs and sharp items. Construction updates and future construction plans were also discussed.
- Presentation: https://docs.google.com/presentation/d/1MXCvJRLvV7attAeCTmCJ8cyM39aLGErq/edit?usp=drive_link&ouid=101205618811575423434&rtpof=true&sd=true

Questions, comments, and concerns followed - [0:31:25]
- What happened to the many patients that were there?
- Did they find other care homes or long term facilities?
- When are you expecting to fully complete the construction of the full hospital?
- What does the mental health care of Queens look like?
- Do you see many involuntary holds for SI or HI?

Member Kupukaʻa joined at 8:05 p.m; 17 members present.

Dog Friendly City Parks Proposal - [0:35:36]: Nate Serota from the Department of Parks and Recreation announced that a letter has been sent out to the Neighborhood Board Chair to provide the list of parks that are in the neighborhood and noted whether those parks have on leash or off leash privileges.

Chair Bass called a recess at 8:11 p.m. due to technical difficulties.
Member Park joined at 8:12 p.m.; 18 members present.
Darsha Lee joined at 8:14 p.m.; 19 members present.
Chair Bass called the meeting back to order at 8:18 p.m.

Dog Friendly City Parks Proposal (Continued) - [0:48:11]: Nate Serota provided the reasoning for the proposal on why they're trying to expand the number of parks to have on leash privileges. He shared that they are presenting at each of the Neighborhood Boards hoping to get a resolution or documentation showing some consensus amongst the community whether they would or would not like to see on leash privileges. He is hoping to get the information by September 2025, but is open to providing more time if needed.

Questions, comments, and concerns followed - [0:51:04]
- Can the Michael Nakamura Park in Subdistrict 4 next to the YMCA not be considered as a park that allows dogs?
- Can you clarify if a dog is NOT allowed in the park what is the consequence?
- To the best of your knowledge how many people in the last year have been cited for dogs in non-friendly dog parks?
- By expanding the number of parks where leashed dogs can go the only thing, we are allowing to have happen is to allow dog events?
- Is there an email or survey that is going to go out to contribute input?
- Can we do something to have someone on site authorized to issue citations?
- What can we do to have something like that in dog friendly parks?
- Is there a way members of the community can reach out to you to give you their opinions?

- Are you aware that what you are asking is problematic for the neighborhood boards due to sunshine law and the fact we have been prohibited from giving our opinions?
- When do you need this feedback ideally?
- Can you share who initiated this proposal?
- When you have an unleashed dog park is there fencing around the park to protect the public?
- Would the city consider doing a press release for people to submit feedback?

Sharon Williams joined at 8:22 p.m.; 20 members present.

IV. COMMUNITY CONCERNS - [1:13:54]: None.

V. BOARD BUSINESS - [1:14:40]

Board Member Kurumi Kaapana-Aki – 3 Meeting Absence - [1:14:52]: Neighborhood Assistant (NA) Rachel Cristobal explained the process of the 3 absences and that a motion would be required for any action which is to vacate the seat. If no motion is made, the member will remain on the Board. Chair Bass asked If Member Kaapana-Aki has tried to contact the Neighborhood Commission Office regarding whether she would like to continue to serve on the Board. The NA acknowledged that a letter was received and Member Kaapana-Aki did wish to continue to serve on the Board. Chair Bass also included that Member Kaapana-Aki has also been reelected to serve on the next term. Hearing no motion. Member Kaapana-Aki will continue to serve on the Board.

Questions, comments, and concerns followed - [1:16:52]
- Has the member contacted the NCO office regarding remaining on the board?
- Does that apply to the new board if the new person was reelected?

Board Member Rudy Rana – 3 Meeting Absence - [1:17:29]: Neighborhood Assistant Rachel Cristobal announced that a 3-absence letter was sent to Member Rana. She also shared that Member Rana spoke with her prior to the meeting that he would like to continue to serve on the Board. Chair Bass announced that Member Rana has also been reelected to serve on the Board's next term. Hearing no motion to vacate the seat. Member Rana will continue to serve the Board.

Wednesday, April 23, 2025 Regular Meeting Minutes - [1:18:23]: Member Gustafson announced that she received one question regarding the question that was asked under the Honolulu Police Department's section. She explained that "ect" that was written in the minutes meant to be etc. She announced that would like to approve the minutes. Hearing no discussion and amendments. The Wednesday, April 23, 2025 regular meeting minutes were ADOPTED as written 20-0-0 (Aye: Bass, Kaʻanehe, Kim, Rana, Nagamine, Marilyn Lee, Gustafson, Among, Dau, Carmody, Kinard, Ross, Flores, Smart, Freed, Kaapana-aki, Kupukaʻa, Park, Darsha Lee, and Williams Nay: None. Abstain: None.) [1:19:10].

VI. REPORTS OF CHAIRS AND BOARD COMMITTEES - [1:19:19]:

- Chair's Report - [1:19:21]: Chair Bass shared that the first Board Chair of Mililani - Waipiʻo - Melemanu Chuck Prentiss passed away. She also included the history of how this was the first Neighborhood Board created in the entire island of Oʻahu. Chair Bass expressed that she was grateful to Member Kaʻanehe and Neighborhood Assistant Rachel Cristobal for preparing the certificate and Member Marilyn Lee for attending Chuck Prentissʻs funeral. She included that she and Member Marilyn Lee had chipped in on providing floral arrangements on the behalf of the Board.
- Community Partnerships and Community Outreach - Alex Ozawa - [1:21:37]: No representative present.
- Community Recognition and Service Awards - Josie Kaʻanehe - [1:21:46]: Member Kaʻanehe reminded that if there is anyone should be recognized to contact her or Chair Bass. No report.
- Community Maintenance and Walk Audit - Martina Segura - [1:22:17]: No representative present.
  - Neighborhood Board Walk Form: https://forms.gle/3YeivtfDyT6VaAi1A
- Planning, Zoning, Sustainable Development, and Climate Resilience - Trevor Nagamine - [1:22:21]: No report.
- Transportation & OMPO - Skyler Ross - [1:22:33]: No report.
- Military Affairs and Emergency Management - Dennis Kim - [1:22:47]: Member Kim provided a brief update on the Aviation Brigade that they had fully moved in at the area up on Kamameha Highway toward Wahiawā and on the left side of the barracks. He also shared if anyone is interested in attending a tour to let him know and he can try to arrange something.

  Comments followed - [1:23:39]

- Health, Houselessness, and Human Services - Darsha Lee - [1:24:07]: No report.
- Parks and Recreation & Patsy T. Mink Central Oahu Regional Field - Sabrina Gustafson - [1:24:23]: No report.
- Education - Marilyn Lee - [1:24:33]: Member Marilyn Lee reported a brief report regarding the following: 400 students graduated from Mililani High School; Golden Scholars event; recognition rewards for middle school students; and updates on the elementary schools.

VII. ELECTED OFFICIAL REPORTS - [1:26:19]

Office of Hawaiʻi's 1st Congressional District, Congressman Ed Case - [1:26:19]: Nestor Garcia reported the following:
- Congressman Case walked through a couple of neighborhoods in his congressional district.
- Ongoing work relating what is happening with Trump administration
- Report: https://case.house.gov/uploadedfiles/neighborhood_board_newsletter_-_quarter_2_-_2025.pdf

Questions, comments, and concerns followed - [1:30:23]
- Is the Congressman's Office aware of the Undersecretary of Defense's memo that came out on May 15th which calls for tans-servicemembers officers that wish to continue their service being rooted out having their medical records ransacked and possibly being separated under JDK that separation code is a national security threat if trans-servicemembers don't voluntarily get out, that's the stick end of the carrot and stick?
- Does your office have any input on that?
- Is there any follow up to reach out to the teachers who were erroneously removed?
- Are there any steps being taken to make sure these events don't happen again?

Office of Hawaiʻi State Governor Josh Green - [1:34:07]: Toni Schwartz reported the following:
- Responses to concerns that were mentioned at the previous meeting:
  - Kamameha Highway Improvements: https://drive.google.com/file/d/1RlP3kOQXyp745zTHccBFdTTnKv3_HLja/view?usp=drive_link
  - Project Lifecycle: https://drive.google.com/file/d/1DgmulSwxoZupOgTD_ByZ9u-tdHm_Bckn/view?usp=drive_link
  - List of Car/Light Truck Safety Inspection Stations: https://hidot.hawaii.gov/highways/files/2022/08/Station-List-All-Counties-Cars-Trucks-2022-08-02.pdf
- Newsletter: https://drive.google.com/file/d/1B9IZBY37AlRM_jqGgxg8H8Kp7_AcNJ9Y/view?usp=drive_link

Questions, comments, and concerns followed - [1:38:21]
- Is there anyway the timeline can be moved up?
- Can they every created a four (4) lane highway through Kipapa Gulch?

Office of the City & County of Honolulu Mayor Rick Blangiardi - [1:40:55]: Tracy Kubota reported the following:
- Information on Summer Fun
  - The 2025 Summer Fun sites, and which ones offer Summer Plus, are indicated on the interactive Summer Fun map: https://bit.ly/SummerFunMap
  - Summer Fun Job: https://bit.ly/summerfunjob
  - Interactive Map to Find the Nearest District Park for a Program: https://bit.ly/OahuParkMap
- Provided responses to concerns that were raised from the previous meeting regarding the Mililani District Park.
- She will be retiring in June 2025 and expressed her gratitude to the Neighborhood Commission Office and the other departments for her job seamlessly in providing the answers to all the Neighborhood Boards' questions.
- Newsletter: https://drive.google.com/file/d/1QqzCIVJf-Il55dGCsuPqpJDIVVuwpwmd/view?usp=drive_link

Office of the City & County of Honolulu Council District 8, Councilmember Val Okimoto - [1:46:16]: Aaron Wilson reported the following:
- Highlights on the Fiscal Year 2026 budget
- Responded to a concern from the previous meeting regarding when the Honolulu Fire Department's helicopter will be operational.
- Councilmember Okimoto believes that some areas were evaluated correctly to determine an area is a flood zone.
- Newsletter: https://drive.google.com/file/d/1xoeiYhcWtIhTI6iTc3sCn9ajGm2au1IW/view?usp=drive_link

Questions, comments, and concerns followed - [1:48:06]
- Can someone look into getting the elevator for the Mililani Transit Center fixed?
- Can accommodations be made to allow access in the meantime?
- Does DTS not have a maintenance budget?

Office of the City & County of Honolulu Council District 2, Councilmember Matthew Weyer - [1:51:24]: Kelly Anaya reported the following:
- Attendance at Police Week
- The City recently celebrated the largest one-time vehicle deployment in the City's history with the blessing of 17 new emergency response vehicles.
- Legislative Updates: Bill 18 - Allow the City to reduce single use plastic bottles in vending machines located on City's facilities; Bill 15 - Financial relief for local families in regards to the State's cesspool conversion; Bill 36 - Allow the Mayor to access the reserve stability funds during economic downturn; Bill 29 - Extend the real property tax exemption for qualifying affordable rental units.
- Responded to a concern raised at the last meeting regarding crosswalks in Wahiawā that needs repainting.

Office of State Senate District 18, Senator Michelle Kidani - [1:55:07]: Trevor Nagamine reported the following:
- Senate Bill 1300 is now awaiting Governor's approval which relates to the expansion of the Stat's free lunch program.

- Few details on the budget bill for this year

Office of State Senate District 17, Senator Donovan Dela Cruz - [1:56:39]: Charles Miller reported the following:
- Information on the following Bills: House Bill 300 relating to the State's budget; Senate Bill 1044 relating to stabilization of property's insurance; and Senate Bill 1442 regarding child and adolescent's mental health in the Department of Health.

Questions, comments, and concerns followed - [1:59:05]
- Can you restate the bill number on the Pearl Highlands transit center?
- Can you elaborate on what that bill does?
- Can your office elaborate on SB 934 and how it will be beneficial to our community at the next meeting that would be helpful?

Office of State House District 38, Representative Lauren Matsumoto - [2:01:15]: No representative present.
- Newsletter: https://drive.google.com/file/d/1KHJ8CcvY_6BWAjLfVt32g1GOTPZZ4qCq/view?usp=drive_link

Office of State House District 37, Representative Trish La Chica - [2:01:36]: Representative La Chica reported the following:
- Working with the Department of Transportation for barriers and signage near Kipapa Gulch to enhance safety and prevent unauthorized encampments.
- Legislative Updates: House Bill 329 - enables School Facility Authority to develop more preschool classrooms; House Bill 1231 - Fund for the safe routes to school program; Senate Bill 1300 - Enable the Department of Education to expand options for those that currently have CDL license.
- Community Safety Talk Story
- Worked with the Honolulu Police Department (HPD)'s Traffic Division to conduct targeted operations on Meheula Parkway and Kamehameha Highway in response to serious concerns about speeding, reckless driving, and illegal racing.
- Newsletter: https://drive.google.com/file/d/10OiWdclD3OctZdEPPIFJ6RtoozeH9sek/view?usp=drive_link

Questions, comments, and concerns followed - [2:09:23]
- Any chance of moving up the timeline for the repaving?
- Is there any follow up with outreach or identifying barriers to vaccinations in our schools?

Office of State House District 46, Representative Amy Perruso - [2:12:06]: Yvonne Yoro reported the following:
- The session ended
- Legislative update on House Bill 969 - Prohibit a landfill over aquifer.
- Community forum updates which included a community forum being held at Mililani High School.
- Newsletter: https://drive.google.com/file/d/1ZrcXqu42e07VB7VRT9NPdHN5HA5gyLcz/view?usp=drive_link

VIII. ANNOUNCEMENTS - [2:14:50]:

Member Marilyn Lee announced that she would like to make a correction in her education report regarding the number of students that had graduated from Mililani High School. The correct number was 630 graduates.

Next Board Meeting: The next scheduled board meeting will be held on Wednesday, June 25, 2025, at 7:30 pm. Location: Mililani High School – H Building.

Broadcast: Videotaping of Board meetings are scheduled to be shown on ʻŌlelo Focus 49, Every Second Thursday at 9:00 am, and on ʻŌlelo Views 54, Every First and Third Saturday at 9:00 am.

IX. ADJOURNMENT - [2:15:51]: The meeting adjourned at 9:45 p.m.

Submitted by: Rachel Cristobal, Neighborhood Assistant, NCO
Reviewed by: Dylan Buck, Community Relation Specialist, NCO
Finalized by: Sabrina Gustafson, Secretary

MILILANI/ WAIPIʻO/ MELEMANU NEIGHBORHOOD BOARD NO. 25

NEIGHBORHOOD COMMISSION • 925 DILLINGHAM BOULEVARD, SUITE 160 • HONOLULU, HAWAIʻI 96817
PHONE (808) 768-3710 • FAX (808) 768-3711 • WEBSITE http:///www.honolulu.gov/nco

REGULAR MEETING AGENDA

WEDNESDAY, JUNE 25, 2025 at 7:30 P.M.
MILILANI HIGH SCHOOL – H BUILDING
95-1200 MEHEULA PARKWAY, MILILANI, HI 96789
AND VIRTUAL VIA WEBEX

Meeting Link: https://cchnl.webex.com/cchnl/j.php?MTID=m369359c4e541c9a75488c5659a6601ad
Meeting Number: 2482 424 7186
Passcode: NB25 (6225 when dialing from a phone or video system)
Join By Phone: 1-408-418-9388
Access Code: 2482 424 7186

Meeting Materials: https://drive.google.com/drive/folders/1kK0RlwlrULOHw3HFRCLnoiy8MZLoYk8D
Recordings of Board meetings can be found at: https://www.youtube.com/@NeighborhoodCommissionOffice

Rules of Speaking: Anyone wishing to speak is asked to raise their hand, and when recognized by the Chair, to address comments to the Chair. All dialogue at the meeting will be conducted by use of the microphone. Those joining the meeting on WebEx are reminded to mute their speakers until they wish to be recognized by the Chair. Anyone not following these rules will be ruled out of order by the Chair. Those providing Presentations to the Board are encouraged to do so via a PowerPoint presentation and provide handouts for the board and the community. The public concerns and comments are limited to three (3) minutes each. Please silence all electronic devices.

Written Testimony: All written testimony must be received in the Neighborhood Commission Office 48 hours prior to the meeting. If within 48 hours, written and/or oral testimony may be submitted directly to the board at the meeting. If submitting written testimony, please note the board and agenda item(s) your testimony concerns. Send to: Neighborhood Commission Office, 530 South King Street, Room 406, Honolulu, HI 96813. Fax: (808) 768-3711. Email: nbtestimony@honolulu.gov

I. CALL TO ORDER – Chair Danielle M. M. Bass
   A. Pledge of Allegiance, Public Notice, Roll Call/Quorum

II. MONTHLY REPORTS (Limited to two (2) minutes each)
   A. Honolulu Fire Department
      (Monthly report; fire and emergency incident statistics for *this community's jurisdiction for* April – May 2025, HFD safety tips reminders, and upcoming events)
   B. Honolulu Police Department
      (Monthly report; crime and incident statistics for *this community's jurisdiction for* April – May 2025, HPD safety tips, reminders, and upcoming events)
   C. U.S. Army – Combat Aviation Brigade, 25th Infantry Division
      (Monthly report; updates on previous and current questions / concerns, safety tips, reminders, and upcoming events)
   D. Board of Water Supply (BWS)
      (Monthly report; water main break incidents and statistics for *this community's jurisdiction for* April – May 2025; BWS tips, reminders, and upcoming events)
   E. State of Hawai'i School Facilities Authority (HiSFA)
      (Monthly report and status update of Mililani High School Workforce Housing project; updates on previous and current questions / concerns, reminders, and upcoming events)

III. COMMUNITY CONCERNS (Limited to two (2) minutes each)
   Report Of Any Events or Concerns Within the Community
   Any community member, can come forward and express any comment or concern within decorum.
   Please, limit your comments to two (2) minutes each per issue for items not on the agenda.

IV. BOARD BUSINESS:
   A. Approval of Meeting Minutes: Wednesday, May 28, 2025 Regular Meeting Minutes
   B. Presentation of Certificates of Board Service: Board Members Michael Dau & Leslie Among

V. REPORTS OF CHAIRS AND BOARD COMMITTEES (Limited to two (2) minutes each)
   A. Chair's Report
   B. Community Partnerships and Community Outreach – Alex Ozawa, Chair
   C. Community Recognition and Service Awards – Josie Kaʻanehe, Chair
   D. Community Maintenance and Walk Audit – Martina Segura, Chair
      i. Neighborhood Board Walk Form: https://forms.gle/3YeivtfDyT6VaAi1A
   E. Planning, Zoning, Sustainable Development, and Climate Resilience – Trevor Nagamine, Chair
   F. Transportation & OMPO – Skyler Ross, Chair
   G. Military Affairs and Emergency Management – Dennis Kim, Chair

H. Health, Houselessness, and Human Services – Darsha Lee, Chair
I. Parks and Recreation & Patsy T. Mink Central Oahu Regional Park – Sabrina Gustafson, Chair
J. Education – Marilyn Lee, Chair

VI. ELECTED OFFICIALS REPORTS (Limited to two (2) minutes each)
(Monthly reports given by the following elected officials or their designee; updates on previous or current questions / concerns)

A. Office of Hawaiʻi's 1st Congressional District, Congressman Ed Case – Nestor Garcia
B. Office of Hawaiʻi State Governor Josh Green – Toni Schwartz, Governor's Representative
C. Office of the City & County of Honolulu Mayor Rick Blangiardi – Tracy Kubota, Mayor's Representative
D. Office of the City & County of Honolulu Council District 8, Councilmember Val Okimoto
E. Office of the City & County of Honolulu Council District 2, Councilmember Matthew Weyer
F. Office of State Senate District 18, Senator Michelle Kidani
G. Office of State Senate District 17, Senator Donovan Dela Cruz
H. Office of State House District 38, Representative Lauren Matsumoto
I. Office of State House District 37, Representative Trish La Chica
J. Office of State House District 46, Representative Amy Perruso

VII. ANNOUNCEMENTS

A. Next Board Meeting: The next scheduled board meeting will be held on Wednesday, July 23, 2025, at 7:30 pm. Location: Mililani High School – H Building.
B. Broadcast: Videotaping of Board meetings are scheduled to be shown on ʻŌlelo Focus 49, Every Second Thursday at 9:00 am, and on ʻŌlelo Views 54, Every First and Third Saturday at 9:00 am.

VIII. ADJOURNMENT

A mailing list is maintained for interested persons and agencies to receive this board's agenda and minutes. Additions, corrections, and deletions to the mailing list may be directed to the Neighborhood Commission Office (NCO) at Kapālama Hale, 925 Dillingham Boulevard, Suite 160, Honolulu, HI 96817, by telephone on (808) 768-3710, fax (808) 768-3711, or e-mailing nco@honolulu.gov. Agenda documents and minutes are also available online at http://www.honolulu.gov/nco/boards.html

If you need an auxiliary aid/service or other accommodation due to a disability or an interpreter for a language other than English, please call the Neighborhood Commission Office at (808) 768-3710 between 8:00 a.m. and 4:00 p.m. or send an email to nco@honolulu.gov at least three (3) business days before the scheduled meeting. It may not be possible to fulfill requests received after this date.

Meeting Location: The monthly meetings of the Mililani-Waipiʻo-Melemanu Neighborhood Board #25 are held in the "H Building" on the Mililani High School campus, as indicated on the map below. The H Building is circled on the map, and parking is available in the upper campus parking lot near the intersection of Meheula Parkway and Makaimoimo Street. For convenience, parking near the Mililani High School Cafeteria is recommended.

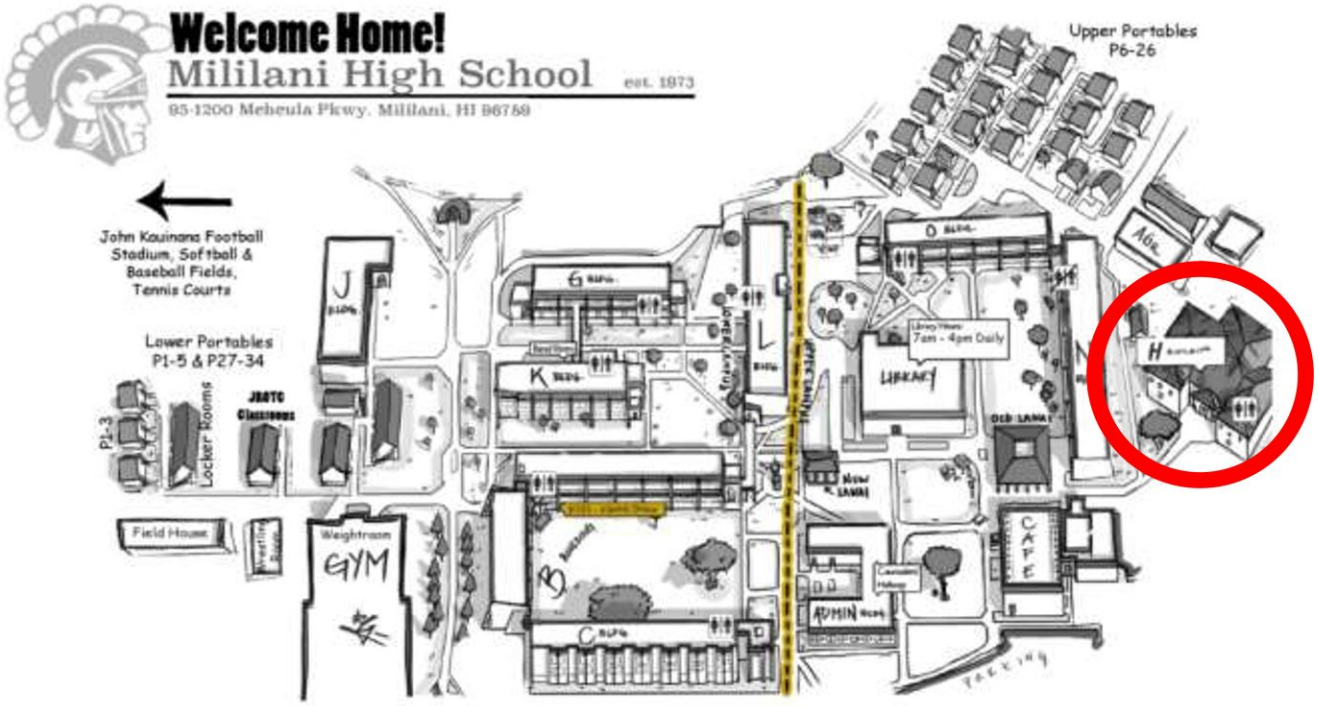
Welcome Home!
Mililani High School
est. 1973
95-1200 Meheula Pkwy, Mililani, HI 96789
John Kauinana Football Stadium, Softball & Baseball Fields, Tennis Courts
Lower Portables P1-5 & P27-34
Upper Portables P6-26
Locker Rooms
JROTC Classrooms
Field House
Weightroom
GYM
LIBRARY
7am - 4pm Daily
CAFE
ADMIN
H

MILILANI - **WAIPIʻO** - MELEMANU NEIGHBORHOOD BOARD NO. 25

c/o NEIGHBORHOOD COMMISSION | 925 DILLINGHAM BOULEVARD SUITE 160 | HONOLULU, HAWAIʻI, 96817
PHONE (808) 768-3710 | FAX (808) 768-3711 | WEBSITE: http://www.honolulu.gov/nco

REGULAR MEETING WRITTEN SUMMARY FOR VIDEO RECORD
WEDNESDAY, JUNE 25, 2025 - 7:30 P.M.
MILILANI HIGH SCHOOL H-BUILDING – 95-1200 MEHEULA PKWY, MILILANI, HI 96789
AND VIA WEBEX

Video recording of this meeting can be found at: https://www.youtube.com/watch?v=pSMnCA5Mg0U

Google Drive Link: https://drive.google.com/drive/folders/1kK0RlwlrULOHw3HFRCLnoiy8MZLoYk8D

I. CALL TO ORDER – [0:00:04]

Chair Danielle Bass called the meeting to order at 7:30 p.m. Chair Bass noted this was the final meeting of the 2023-2025 term, with the next meeting in July welcoming new board members for the 2025-2027 term. Chair Bass mentioned there was no air conditioning in the facility and requested concise reports and questions to keep the meeting brief. The Board recited the Pledge of Allegiance [0:01:29].

Member Segura joined at 7:31 p.m.; 17 members present.
Member Segura left at 7:31 p.m.; 16 members present.

Roll call was conducted [0:02:27] and quorum was established with 16 members present [0:03:50]. Note: This 23-member Board requires 12 members to establish a quorum and to take official Board action.

Board Members Present: Danielle Bass, Josie Kaʻanehe (online), Dennis Kim, Rudy Rana, Trevor Nagamine, Marilyn Lee, Sabrina Gustafson, Leslie Among, Michael Dau, Elise Carmody (online), Brandon Kinard (online), Ed Flores, Mary Smart, Emil Svrcina, Ann Freed (online), Rodney Park (online), Martina Segura (joined at 7:31 p.m.), and Kurumi Kaapana-aki (joined at 8:03 p.m.).

Board Members Absent: Alex Ozawa, Sharon Williams, Darsha Lee, Skyler Ross, and Katherine Kupukaa.

Guests: Captain Tateishi (Honolulu Fire Department); Lieutenant Baysa, Sergeant John (Honolulu Police Department); Specialist Charles Clark (U.S. Army); Kathleen Pahinui (Board of Water Supply); Toni Schwartz (Governor Josh Green); Aaron Wilson (Councilmember Val Okimoto); Kelly Anaya (Councilmember Matt Weyer); Representative Amy Perruso; Representative Lauren Matsumoto; Charles Miller (Senator Donovan Dela Cruz); Tosa Lobendahn (Representative Trish La Chica); Cheri Nakamura (State of Hawaiʻi School Facilities Authority); Nathan Hokama, Ken Inouye, Kate Ozawa, Daniel Gabriel (Residents and Guests); Rachel Cristobal (Neighborhood Commission Office). Note: Name not included if not legible or stated for the record. There were approximately 29 total participants.

II. MONTHLY REPORTS - [0:04:02]

Honolulu Fire Department (HFD) - [0:04:02]: Captain Tateishi provided the following:
- The monthly statistics for the month of June 2025
- Provided details on the 2 new launched tools: Incident Trend Dashboard and Fire Response Search Tool
- More information: https://fire.honolulu.gov/
- Report: https://drive.google.com/file/d/1KrwQ8284y_PdPODWvVGaBluBdZaKKltb/view?usp=drive_link

Honolulu Police Department (HPD) - [0:06:39]: Lieutenant Baysa provided the following:
- Introduced Sergeant John.
- The monthly statistics for the month of June 2025.
- Safety tip regarding teaching children when to call 911.
- Island-wide Gun Buyback Program on Saturday, July 12, 2025.

Questions, comments, and concerns followed - [0:09:18]
- Do you also educate the public on how to register the guns under their own name instead of giving them back?
- How often do you patrol the area?
- How many parking tickets have been given?
- Is that a lot of tickets?

Military – Combat Aviation Brigade, 25th Infantry Division - [0:12:13]: Specialist Charles Clark reported that a hiring fair will be in July 2025.

Board of Water Supply (BWS) - [0:12:55]: Kathleen Pahinui reported the following:
- No main breaks.
- The annual water quality report will be mailed separately from bills starting next month.

State of Hawaiʻi School Facilities Authority (HiSFA) - [0:13:51]: Cheri Nakamura reported the following:
- Lieutenant Governor Luke signed HB329 (now Act 204), which clarifies the school facilities authority's responsibilities.

- The bill includes a $2 million appropriation for the Mililani teacher housing project.
- Expressed gratitude to area legislators Representative La Chica, Representative Matsumoto, Senator Kidani, and Senator Dela Cruz for their support.

Questions, comments, and concerns followed - [0:14:40]

- Is the $2 Million new money allocated to the project or replacement money for the previously allocated workforce housing funds?

III. COMMUNITY CONCERNS - [0:15:56]: None.

IV. BOARD BUSINESS - [0:16:03]

Wednesday, May 28, 2025 Regular Meeting Minutes - [0:16:03]: Member Gustafson reported that no questions, comments, or concerns had been received regarding the minutes, so she would like to approve the Wednesday, May 28, 2025 regular meeting minutes. Neighborhood Assistant Rachel Cristobal asked the Board if there were any amendments that any one would like to make. Hearing no discussion and amendments. The Wednesday, May 28, 2025 regular meeting minutes were ADOPTED as written 16-0-0 (Aye: Bass, Kaʻanehe, Kim, Rana, Nagamine, Marilyn Lee, Gustafson, Among, Dau, Carmody, Kinard, Flores, Smart, Freed, Park, and Svrcina. Nay: None. Abstain: None.) [0:16:47].

Presentation of Certificates of Board Service: Board Members Michael Dau & Leslie Among - [0:16:55]: Chair Bass and Vice Chair Nagamine presented certificates of appreciation to Members Michael Dau (13 years of service) and Leslie Among (6 years of service). Chair Bass thanked them for their service and welcomed them to continue participating in the community.

V. REPORTS OF CHAIRS AND BOARD COMMITTEES - [0:18:52]:

- Chair's Report - [0:19:00]: Chair Bass announced that she had Received a request from the North Shore Neighborhood Board Chair Kathleen Pahinui for a joint special meeting of four neighborhood boards (Wahiawā, North Shore, Mililani Mauka, and Mililani- Waipiʻo - Melemanu). The joint meeting will be held on July 30, 2025 at Leilehua High School. The meeting will focus on the proposed agribusiness development on a ranch in North Shore, proposed gondolas, and zip lines connecting to Mount Ka'ala. The developer and the Department of Planning and Permitting have been invited to present. This will be a special meeting and won't impact board members' attendance records. The regular July 2025 meeting will still be held on Wednesday, July 23, 2025 for installation of officers and committee chairs.

  Questions, comments, and concerns followed - [0:23:09]
  - Is there a reason why Chair Pahinui wanted only the Wahiawa, Mililani and Mauka neighborhood boards to participate?
  - What is the date of the meeting?
  - Will this impact traffic from tourism?
  - What about the Wai`anae Side?
  - Were they asked to participate?

- Community Partnerships and Community Outreach - Alex Ozawa - [0:26:52]: No representative present.
- Community Recognition and Service Awards - Josie Kaʻanehe - [0:27:00]: Member Kaʻanehe thanked Michael Dau and Leslie Among for their service to the board.
- Community Maintenance and Walk Audit - Martina Segura - [0:27:23]: No representative present, but Chair Bass reminded the community to continue using the Google Form for walk audit or community maintenance issues.
  - Neighborhood Board Walk Form: https://forms.gle/3YeivtfDyT6VaAi1A
- Planning, Zoning, Sustainable Development, and Climate Resilience - Trevor Nagamine - [0:27:34]: Member Nagamine reported:
  - The City Department of Transportation Services has published planned changes to TheBus in conjunction with the Skyline extension opening on Wednesday, October 1, 2025.
  - Two major bus route changes impacting Mililani:
    - Route 51
    - Route E
- Transportation & OMPO - Skyler Ross - [0:28:42]: This was not discussed, but there was no representative present.
- Military Affairs and Emergency Management - Dennis Kim - [0:28:42]: Member Kim reported that the military is celebrating its 250th anniversary.
- Health, Houselessness, and Human Services - Darsha Lee - [0:29:13]: No representative present.
- Parks and Recreation & Patsy T. Mink Central Oahu Regional Field - Sabrina Gustafson - [0:29:18]: Member Gustafson reported she is working on a survey to poll the community regarding last month's presentation (dog park) and hopes to have it available next month.
- Education - Marilyn Lee - [0:29:37]: Member Marilyn Lee reported the following:
  - Schools are on vacation and the summer reading program at Mililani Public Library is in progress.
  - The preschool subsidy program bill was signed on Tuesday, June 24, 2025 by Acting Governor Sylvia Luke.

Member Kaapana-aki joined at 8:03 p.m.; 17 members present.

VI. ELECTED OFFICIAL REPORTS - [0:30:57]

Office of Hawaiʻi's 1st Congressional District, Congressman Ed Case - [0:30:57]: No representative present.

Office of Hawai'i State Governor Josh Green - [0:31:05]: Toni Schwartz reported the following recently signed bills:

- Senate Bill (SB) 1300 (School Meals): Expands access to free school meals for students who qualify for reduced-price meals under the National School Lunch Program; provides free meals to students whose family income is below 300% of the federal poverty level; appropriates $3.3 million over two years.
- Governor Green signed 16 bills to enhance protection and care of Hawaii's keiki and kupuna, including: House Bill (HB) 2400 (Teacher Misconduct); SB2475 (Harm to Students Registry); HB2430 (Summer EBT Program); SB2305 (Silver Alert Program).
- Newsletter: https://drive.google.com/file/d/1hlggY0OjoTjDr5n7PksOmnC4ep8TprOE/view?usp=drive_link

Questions, comments, and concerns followed - [0:36:09]

- Have the fireworks bills been signed yet?
- Why is Sylvia Luke signing the bills now?

Office of the City & County of Honolulu Mayor Rick Blangiardi - [0:37:03]: No representative present; Chair Bass noted that the Mayor's report had been uploaded to the neighborhood board Google Drive.

- Memo: https://drive.google.com/file/d/1KLofCksDUGp14dr9N1Zu5M3StcqWGuM4/view?usp=drive_link
- Newsletter: https://drive.google.com/file/d/1oYwoqjIArN1nP_pCsiV8w6aWsXDfrnkQ/view?usp=drive_link

Office of the City & County of Honolulu Council District 8, Councilmember Val Okimoto - [0:37:40]: Aaron Wilson reported the following:

- Budget season concluded with $5 million secured in CIP projects.
- Complete Streets is working to lower school area speed limits from 25 to 20 mph.
- The Department of Transportation completed an investigation and found a trend of southbound motorists colliding with fixed objects while negotiating turns; work orders issued for shoulder and parking lane lines with raised pavement markings.
- Announced that Councilmember Okimoto is now chair of the Budget Committee.

Questions, comments, and concerns followed - [0:39:21]

- Can your office look into the situation at the Mililani Transit Center's elevator?
- Can we add her to the people who look at the Coconut Rhinoceros Beetle situation?
- Could you share with us Councilmember Okimoto's new position with the City Council?

Office of the City & County of Honolulu Council District 2, Councilmember Matthew Weyer - [0:42:31]: Kelly Anaya reported the following:

- Bill 15 (financial relief for local families regarding the state's cesspool conversion regulation) was signed by the Mayor.
- Bill 29 (extending real property tax exemption period for qualifying affordable home rentals) was also signed on May 28th.
- Councilmember Weyer participated in Mid Pacific Institute's year-end celebration of learning.
- Councilmember Weyer is now Chair of the Energy, Environment, and Sustainability Committee.

Questions, comments, and concerns followed - [0:44:10]

- Could you share with us Councilmember Weyer's new position with the City Council?

Office of State Senate District 18, Senator Michelle Kidani - [0:44:58]: Trevor Nagamine reported the following:

- Grateful that SB1300 was signed into law.
- Thanked Governor Green, Acting Governor Luke, and legislative counterparts including Representative Justin Woodson and Representative Trish La Chica.

Office of State Senate District 17, Senator Donovan Dela Cruz - [0:45:40]: Charles Miller reported the following:

- H2 metal plate issue: The original contractor abandoned the project; a new contract has been issued and construction should start in early July 2025 once supplies arrive from the mainland.
- SB934 (State Budget/Pearl Highlands Station): The legislature found Pearl Highlands Station is a critical expansion point for the Honolulu Transit Rail Project; funding is for plans, design, and construction of an access ramp from H2 Freeway to the bus transit center.
- A meeting with HART is scheduled for mid-July 2025 to discuss the project.

Office of State House District 38, Representative Lauren Matsumoto - [0:47:49]: No representative present.

- Distributed her newsletter highlighting May events including awards assemblies, graduations, and Mililani High School's 37 OIA championships.
- Provided an update on the Mililani Emergency Exit Road: it's now open; DTS and DOT will maintain the gravel road; Phase 2 (bus lane and full paving) timeline is uncertain.
- Thanked the neighborhood board, DOT, and DTS for completing the project quickly.
- Shared information about passed legislation and mid-session survey results.

- Two resolutions passed: House of Representatives (HR) 131 (Kipapa Elementary crosswalk safety) and HR130 (reflective gear for bicyclists).
- Women's Court bill will be signed.
- Newsletter: https://drive.google.com/file/d/1Uo9c2brC5M8icIG71jho9ehRghpXj1iz/view?usp=drive_link
- 2025 End of Session Update: https://drive.google.com/file/d/1bqiy7kmuCKSSMQiac6HuZDp5qgSp6qpU/view?usp=drive_link

Questions, comments, and concerns followed - [0:51:21]

- In regards to the emergency road, who has the key to open the gate to use the road if there is an emergency?

Office of State House District 37, Representative Trish La Chica - [0:52:36]: Tosa Lobendahn reported the following:

- Highlighted SB1300 (school meals) and HB862 (the bus bill).
- The Governor's intent to veto list includes 19 of 320 bills passed.
- Representative La Chica supports e-bike violations regulation and encourages residents to contact the Governor's office to keep it off the veto list.
- Representative attended May Day celebrations and graduation ceremonies.
- Encouraged public testimony on Skyline Phase 2 bus routes by Tuesday, July 15, 2025.
- Newsletter: https://drive.google.com/file/d/1wVFtEezU-CJOMw2gxLl6-f7T4vmO8NhZ/view?usp=drive_link

Office of State House District 46, Representative Amy Perruso - [0:56:12]: Representative Perruso reported:

- Elaborated on the July 30th joint meeting:
  - The project affects the whole community through traffic and safety concerns.
  - The developer expects about 1,500 visitors per day along Farrington Highway.
  - North Shore Neighborhood Board is also in conversation with the Waiʻanae and Hawaiʻi Kai Neighborhood Boards.
- Federal changes to Medicaid requirements will impact many residents.
- Newsletter: https://drive.google.com/file/d/1gdtSzXtGS8wGEeVy8WYY75mJhWSvooFc/view?usp=drive_link

Questions, comments, and concerns followed - [1:00:03]

- Is the Kuli'ou'ou-Kalani Iki neighborhood board following what is going on at North Shore?

VII. ANNOUNCEMENTS - [1:00:56]:

Next Board Meeting: The next scheduled board meeting will be held on Wednesday, July 23, 2025, at 7:30 pm. Location: Mililani High School – H Building.

Special Joint Meeting: A special meeting with the North Shore, Wahiawā, and Mililani Mauka Neighborhood Boards will be held on Wednesday, July 30, 2025, at 6:30 p.m. at Leilehua High School regarding the Kaukonahua Ranch and Kamananui gondola project.

Broadcast: Videotaping of Board meetings are scheduled to be shown on ʻŌlelo Focus 49, Every Second Thursday at 9:00 am, and on ʻŌlelo Views 54, Every First and Third Saturday at 9:00 a.m.

VIII. ADJOURNMENT - [1:02:16]: The meeting adjourned at 8:32 p.m.

Submitted by: Rachel Cristobal, Neighborhood Assistant, NCO
Reviewed by: Lindon Valenciano, Public Relations Assistant, NCO
Finalized by: Sabrina Gustafson, Secretary

MILILANI/ WAIPIʻO/ MELEMANU NEIGHBORHOOD BOARD NO. 25

NEIGHBORHOOD COMMISSION • 925 DILLINGHAM BOULEVARD, SUITE 160 • HONOLULU, HAWAIʻI 96817
PHONE (808) 768-3710 • FAX (808) 768-3711 • WEBSITE http:///www.honolulu.gov/nco

INITIAL CONVENING MEETING AGENDA

WEDNESDAY, JULY 23, 2025 at 7:30 P.M.
MILILANI HIGH SCHOOL – H BUILDING
95-1200 MEHEULA PARKWAY, MILILANI, HI 96789
AND VIRTUAL VIA WEBEX

This meeting location is open to public participation.
Other available options include participating by computer, phone or by video system.
WebEx and phone-in instructions are as follows:

Meeting Link: https://cchnl.webex.com/cchnl/j.php?MTID=m369359c4e541c9a75488c5659a6601ad
Meeting Number / Access Code: 2482 424 7186
Password: NB25 (6225 from phones and video systems)
Join by phone: +1(408) 418-9388 [United States toll]

Meeting Materials: Find an archive of handouts and referenced materials concerning to Mililani-Waipiʻo-Melemanu Neighborhood Board No.25 at: https://drive.google.com/drive/folders/1kK0RlwlrULOHw3HFRCLnoiy8MZLoYk8D

Recordings of Board meetings: https://www.youtube.com/@NeighborhoodCommissionOffice

Rules for Virtual Participation and Speaking: Anyone wishing to speak is asked to raise their hand, and when recognized by the Chair, to address comments to the Chair. Speakers are encouraged to keep their comments under two (2) minutes, and those giving reports are urged to keep their reports to less than two (2) minutes. Please silence all electronic devices.

Written Testimony: All written testimony must be received in the Neighborhood Commission Office 48 hours prior to the meeting. If within 48 hours, written and/or oral testimony may be submitted directly to the board at the meeting. If submitting written testimony, please note the board and agenda item(s) your testimony concerns. Send to: Neighborhood Commission Office, 925 Dillingham Blvd Suite 160, Honolulu, HI 96817. Fax: (808) 768-3711. Email: nbtestimony@honolulu.gov

I. CALL TO ORDER – Chair Pro Tem, Danielle M. M. Bass
   A. Pledge of Allegiance, Public Notice, Roll Call/Quorum

II. ELECTION OF OFFICERS – To serve the term year (July 1, 2025 – June 30, 2026).
   A. Chair
   B. Vice Chair
   C. Secretary
   D. Treasurer

III. MONTHLY REPORTS (Limited to two (2) minutes each)
   A. Honolulu Fire Department
      (Monthly report; fire and emergency incident *statistics for this community's jurisdiction for June* – July 2025, HFD safety tips reminders, and upcoming events)
   B. Honolulu Police Department
      (*Monthly report; crime and incident statistics for this community's jurisdiction for June* – July 2025, HPD safety tips, reminders, and upcoming events)
   C. U.S. Army – Combat Aviation Brigade, 25th Infantry Division
      (Monthly report; updates on previous and current questions / concerns, safety tips, reminders, and upcoming events)
   D. Board of Water Supply (BWS)
      (*Monthly report; water main break incidents and statistics for this community's jurisdiction for June* – July 2025; BWS tips, reminders, and upcoming events)
   E. State of Hawaiʻi School Facilities Authority (HiSFA)
      (Monthly report and status update of Mililani High School Workforce Housing project; updates on previous and current questions / concerns, reminders, and upcoming events)

IV. INITIAL CONVENING / BOARD BUSINESS
   A. Meeting Date, Time, Location, and Format (Virtual Component): The Mililani-Waipiʻo-Melemanu Neighborhood Board No. 25 presently meets on the 4th Wednesday of the month, 7:30 p.m., Mililani High School, with virtual component.

   B. Board Recess Schedule: The Board is alloted three (3) recesses with the term year (July 1, 2025 – June 30, 2026).

C. Adoption of Oral Testimony Rules: Public comments are presently limited to 2 minutes, presentations time allotment will be made by mutual agreement between the presenter and the Chair.

D. Creation of Board Committees and Chairs: The Chair may establish committees and appoint members from the term year (July 1, 2025 – June 30, 2026).

CREATION/APPOINTMENT OF BOARD COMMITTEES AND CHAIRS
i. Community Partnerships and Community Outreach
ii. Community Recognition and Service Awards
iii. Community Maintenance and Walk Audit
iv. Planning, Zoning, Sustainable Development, and Climate Resilience
v. Transportation and OMPO
vi. Military Affairs and Emergency Management
vii. Health, Houselessness, and Human Services
viii. Parks and Recreation & Patsy T. Mink Central Oahu Regional Park
ix. Education

V. APPROVAL OF MEETING MINUTES: Wednesday, June 25, 2025 Regular Meeting Minutes

VI. COMMUNITY CONCERNS (Limited to two (2) minutes each)
A. Report Of Any Events or Concerns Within the Community

VII. ELECTED OFFICIALS REPORTS (Limited to two (2) minutes each)
A. Office of Hawaiʻi's 1st Congressional District, Congressman Ed Case – Nestor Garcia
B. Office of Hawaiʻi State Governor Josh Green – Toni Schwartz, Governor's Representative
C. Office of the City & County of Honolulu Mayor Rick Blangiardi – Mayor's Representative
D. Office of the City & County of Honolulu Council District 8, Councilmember Val Okimoto
E. Office of the City & County of Honolulu Council District 2, Councilmember Matthew Weyer
F. Office of State Senate District 18, Senator Michelle Kidani
G. Office of State Senate District 17, Senator Donovan Dela Cruz
H. Office of State House District 38, Representative Lauren Matsumoto
I. Office of State House District 37, Representative Trish La Chica
J. Office of State House District 46, Representative Amy Perruso

VIII. ANNOUNCEMENTS
A. Next Board Meeting: The next scheduled regular board meeting will be tentatively held on Wednesday, August 27, 2025 at 7:30 pm. at Mililani High School – H Building.
B. Broadcast: Videotaping of Board meetings are scheduled to be shown on ʻŌlelo Focus 49, Every Second Thursday at 9:00 a.m., and on ʻŌlelo Views 54, Every First and Third Saturday at 9:00 a.m.

IX. ADJOURNMENT

A mailing list is maintained for interested persons and agencies to receive this board's agenda and minutes. Additions, corrections, and deletions to the mailing list may be directed to the Neighborhood Commission Office (NCO) at Kapālama Hale, 925 Dillingham Boulevard, Suite 160, Honolulu, HI 96817, by telephone on (808) 768-3710, fax (808) 768-3711, or e-mailing nco@honolulu.gov. Agenda documents and minutes are also available online at http://www.honolulu.gov/nco/boards.html

If you need an auxiliary aid/service or other accommodation due to a disability or an interpreter for a language other than English, please call the Neighborhood Commission Office at (808) 768-3710 between 8:00 a.m. and 4:00 p.m. or send an email to nco@honolulu.gov at least three (3) business days before the scheduled meeting. It may not be possible to fulfill requests received after this date.

MILILANI - **WAIPIʻO** - MELEMANU NEIGHBORHOOD BOARD NO. 25

NEIGHBORHOOD COMMISSION | 925 DILLINGHAM BOULEVARD SUITE 160 | HONOLULU, HAWAIʻI, 96817
PHONE (808) 768-3710 | FAX (808) 768-3711 | WEBSITE: http://www.honolulu.gov/nco

INITIAL CONVENING MEETING WRITTEN SUMMARY FOR VIDEO RECORD
WEDNESDAY, JULY 23, 2025 - 7:30 P.M.
MILILANI HIGH SCHOOL CAFETERIA – 95-1200 MEHEULA PKWY, MILILANI, HI 96789 AND VIA WEBEX

Video recording of this meeting can be found at: https://www.youtube.com/watch?v=_M9y22uGCRQ

Google Drive Link: https://drive.google.com/drive/folders/1kK0RlwlrULOHw3HFRCLnoiy8MZLoYk8D

I. CALL TO ORDER – [0:00:10]

Chair Pro Tem Danielle Bass called the meeting to order at 7:30 p.m. Chair Pro Tem Bass explained that this was the initial convening of the board for the 2025-2027 term. She noted the change of venue from H Building to the Mililani High School cafeteria due to air conditioning issues. The next meeting will return to H Building. The Board recited the Pledge of Allegiance [0:01:45].

Roll call was conducted [0:02:53] and quorum WAS established with 22 members present [0:04:15]. Note: This 23-member Board requires 12 members to establish a quorum and to take official Board action.

Board Members Present: Danielle Bass, Elise Carmody, Ed Flores, Ann Freed, Sabrina Gustafson, Ken Inouye, Josie Kaʻanehe (online), Kurumi Kaapana-aki, Dennis Kim, Brandon Kinard, Darsha Lee (online), Marilyn Lee, Trevor Nagamine, Alex Ozawa, Katherine Ozawa, Rodney Park (online), Rudy Rana, Skyler Ross, Martina Segura, Mary Smart, Emil Svrcina (online), Sharon Williams, and Katherine Kupukaa (joined at 7:45 p.m.).

Board Members Absent: None.

Guests: Captain Morero (Honolulu Fire Department); Lieutenant Scott Vierra (Honolulu Police Department); Sergeant Olivia Cowart (U.S. Army); Kathleen Pahinui (Board of Water Supply); Cheri Nakamura (State of Hawaiʻi School Facilities Authority); Toni Schwartz (Governor Josh Green); Aaron Wilson (Councilmember Val Okimoto); Kelly Anaya (Councilmember Matt Weyer); Charles Miller (Senator Donovan Dela Cruz); Representative Trish La Chica; Stella A. (Representative La Chica's Office); Representative Amy Perruso; Keoni, Robin Nelson, Val Tuiloma, Daniel Gabriel, Jocelyn Roberts (Residents/Guests); Rachel Cristobal (Neighborhood Commission Office). Note: Name not included if not legible or stated for the record. There were approximately 44 total participants.

II. ELECTION OF OFFICERS - [0:05:04]

Chair - [0:05:04]: Danielle Bass was nominated by Trevor Nagamine. No other nominations were made. Danielle Bass was elected as Chair; 22-0-0 (Bass: Bass, Carmody, Flores, Freed, Gustafson, Inouye, Kaʻanehe, Kaapana-aki, Kim, Kinard, Darsha Lee, Marilyn Lee, Nagamine, Alex Ozawa, Katherine Ozawa, Park, Rana, Ross, Segura, Smart, Svrcina, Williams. Nay: None. Abstain: None.) [0:08:39].

Vice Chair - [0:08:55]: Trevor Nagamine was nominated by Danielle Bass. Trevor Nagamine accepted the nomination. No other nominations were made. Trevor Nagamine was elected as Vice Chair; 22-0-0 (Nagamine: Bass, Carmody, Flores, Freed, Gustafson, Inouye, Kaʻanehe, Kaapana-aki, Kim, Kinard, Darsha Lee, Marilyn Lee, Nagamine, Alex Ozawa, Katherine Ozawa, Park, Rana, Ross, Segura, Smart, Svrcina, Williams. Nay: None. Abstain: None.) [0:10:41].

Secretary - [0:10:51]: Sabrina Gustafson was nominated by Ed Flores. No other nominations were made. Sabrina Gustafson was elected as Secretary; 21-0-1 (Gustafson: Bass, Carmody, Flores, Freed, Inouye, Kaʻanehe, Kaapana-aki, Kim, Kinard, Darsha Lee, Marilyn Lee, Nagamine, Alex Ozawa, Katherine Ozawa, Park, Rana, Ross, Segura, Smart, Svrcina, Williams. Nay: None. Abstain: Gustafson.) [0:15:23].

Member Kupukaa joined at 7:45 p.m.; 23 members present.

Treasurer - [0:13:04]: **Josie Kaʻanehe was nominated by Sabrina Gustafson**. No other nominations were made. **Josie Kaʻanehe was** elected as Treasurer; 23-0-0 (**Kaʻanehe**: Bass, Carmody, Flores, Freed, Inouye, Kaʻanehe, Kaapana-aki, Kim, Kinard, Darsha Lee, Marilyn Lee, Nagamine, Gustafson, Alex Ozawa, Katherine Ozawa, Park, Rana, Ross, Segura, Smart, Svrcina, Williams, Kupukaa. Nay: None. Abstain: None.) [0:15:37].

III. MONTHLY REPORTS - [0:15:40]

Honolulu Fire Department (HFD) - [0:15:40]: Captain Morero from the Mililani Fire Station reported:

- Emergency statistics for June 2025: 1 structure fire, 3 brush fires, 4 nuisance alarm fires, 1 cooking fire, 3 activated alarms (not fires), 78 medical calls, 1 motor vehicle collision with pedestrian, 7 motor vehicle crashes, and 1 hazardous materials incident.
- Safety Tip: Fire safety tips focused on wildland fire awareness, prevention, and preparedness. Recommendations included maintaining yards, cleaning gutters, clearing vegetation around campfires and barbecues, and ensuring machinery has operating spark arresters.
- Report: https://drive.google.com/file/d/1dijBhsjM1MFsWNy9gHU984PzphLqMkFc/view?usp=drive_link

Questions, comments, and concerns followed - [0:17:28]

1. Member Freed: Commended the city regarding the fireworks law that seemed effective this year.
2. Member Freed: Asked how it was for the fire department to handle the fireworks changes in law over the 4th of July, noting it was quieter in her district than it had been in years.
   Captain Morero: Responded that he couldn't speak for the whole department, but their station had no alarms pertaining to fireworks, suggesting the changes were effective.
3. Member Kaʻanehe: Observed that there were still four homes in some areas shooting off fireworks

Honolulu Police Department (HPD) - [0:18:44]: Lieutenant Scott Vierra from the Wahiawā Police Station reported:

- Crime statistics for July 2025: 4 assaults, 0 robberies, 7 burglaries (5 occurred in B250 area), 6 unlawful entries into motor vehicles, and 737 total calls for service.
- Safety Tips: Tips were in regards to outdoor activities and theft prevention.
- Gun Buy Back Program: Announcement of a gun buyback program at Wahiawā Police Station, primarily targeting kupuna with unwanted firearms.

Questions, comments, and concerns followed - [0:21:19]

1. Member Kupukaa: Asked about a theft incident involving a service sticker removed from a windshield that she had encountered.
   Lieutenant Vierra: Responded that he didn't know why someone would take a service sticker.
2. Member Kupukaa: Expressed concern about red light violations at the Mililani's Ruby Tuesday intersection.
   Lieutenant Vierra: Stated he would mention the issue to officers to monitor the area and suggested calling 911 with license plate information when violations are observed.
3. Member Katherine Ozawa: Requested a "turn coming" sign on Kipapa Drive due to multiple accidents when the road is wet.
   Lieutenant Vierra: Explained that changes to road design or signage come from the Department of Planning and Permitting or roadways division, which typically conduct studies based on accident patterns.
4. Member Freed: Asked about drone deployment for fireworks enforcement on July 4th.
   Lieutenant Vierra: Responded that he was not aware of drone deployment in their district, noting that drones haven't been assigned to the districts yet.
5. Member Kaapana-Aki: Asked about what happens when someone inherits a firearm from their kupuna.
   Lieutenant Vierra: Clarified that the program is for people who don't want firearms in their homes, not to take firearms from those who want to keep inherited weapons.
6. Member Kaapana-Aki: Asked about the possibility of HPD assuming the Ruby Tuesday location for a substation.
   Lieutenant Vierra: Stated he hadn't heard anything about that location, but mentioned they would eventually move to a new building across from the Wahiawā shopping center.
7. Member Lee: Reported fireworks in some areas and expressed appreciation for HPD response to calls.
   Lieutenant Vierra: Thanked the member for calling and acknowledged the challenges of fireworks enforcement.
8. Member Ross: Asked about the gun buyback program schedule and whether it includes ammunition.
   Lieutenant Vierra: Explained the program is ongoing and that ammunition can be turned in separately from the gun buyback program.
9. Member Ross: Asked about the fireworks buyback program and whether it would be available at individual HPD stations.
   Lieutenant Vierra: Clarified that the fireworks buyback is at the stadium parking lot, but residents can call 911 to have officers recover fireworks found in homes.

Military – Combat Aviation Brigade, 25th Infantry Division - [0:31:12]: Sergeant Olivia Cowart reported:

- Upcoming Job Fair: Tuesday, August 19th, 2025 at Helemano Military Reservation Training Room from 8:30 a.m. to 2:00 p.m.
- Training Advisory for Oʻahu: includes small arms blank fire, aviation training, artillery, mortar, and demolitions training.
- Information About a Recent Wildland Fire: Located on Schofield Barracks that burned approximately 600 acres.
- Joint Pacific Multinational Readiness Center (JPMRC) Training Exercise Announcement: Will be between October and November 2025. There will be an increase in traffic and noise.
- Community concern line: 808-787-1528.

Questions, comments, and concerns followed - [0:35:08]

1. Member Freed: Expressed appreciation for the presentation and mentioned that military advisories are shared on the Next Door app.
   Sergeant Cowart: Acknowledged and said she would pass that information on.
2. Member Rana: Asked about traffic issues near the post and potential resolutions.
   Sergeant Cowart: Agreed that traffic is backed up but was not aware of any resolution plans, offering to look into it further.
3. Member Kinard: Asked about the date range and location of the fire.
   Sergeant Cowart: Responded that the fire was on Schofield Barracks, but not sure where. She believes that it was more centered towards on the north side of the training range, starting approximately around June 11.
4. Member Kinard: Asked about civilian access to Waikakalaua Stream for cleanup efforts.
   Sergeant Cowart: Stated she was unfamiliar with the exact location but believed pedestrian access would not be considered trespassing if the area was accessible on foot.
5. Member Kim: Asked about increased security at bases.
   Sergeant Cowart: Explained that sometimes bases increase security for various reasons, suggesting it was more related to protests around the US rather than international events.

6. Member Ross: Requested information about how the Army communicates fire incidents to the public.
   Sergeant Cowart: Mentioned that information is typically shared through social media, news articles, and fire apps that report all fires on the island.

Board of Water Supply (BWS) - [0:44:18]: Kathleen Pahinui reported:

- Report: No main breaks for the month of July 2025.
- Annual Unthirsty Plant Sale at Hālawa Xeriscape Garden: Saturday, August 2, 2025 from 9:00 a.m. to 1:00 p.m. The event will include booths on invasive species and little fire ants.

State of Hawaiʻi School Facilities Authority (HiSFA) - [0:45:16]: Cheri Nakamura provided the following presentation:

- Hawaiʻi State Department of Education Employee Housing Survey Results: HiSFA has been meeting with Mililani High School Principal Fred Murphy and Department of Education (DOE) leadership to coordinate next steps for the teacher housing project at site B. She shared results from a DOE employee housing survey showing strong teacher demand for rental housing. The survey highlights: 35% of employees are cost-burdened (paying over 30% of income for housing), 41% identified as retention risks, and over 70% of non-homeowners at retention risk would consider signing a lease for rental housing. Mililani was identified as the most desirable location for teacher housing among educators on Oahu.
- Hawaiʻi State Department of Education Employee Housing Survey Flyer: https://drive.google.com/file/d/1Ur01tKRXt72RjdIff8fHQuwGX_4lFcDj/view?usp=drive_link
- Hawaiʻi State Department of Education - Employee Housing Survey: Retention Risks and Opportunities for Workforce Housing: https://drive.google.com/file/d/1OTfR5-9DFAWaoZWQrGq-ZqX0ou__r4u5/view?usp=drive_link

Questions, comments, and concerns followed - [0:50:06]

1. Member Kaapana-Aki: Asked whether preference would be given to non-tenured teachers versus tenured teachers and emergency hires.
   Ms. Nakamura: Responded that those details of priority have not been decided yet, but would note the question.
2. Member Ross: Requested more transparency on the project timeline and progress.
   Ms. Nakamura: Explained that it's a complicated project with many moving parts, noting that the site change has saved some time by eliminating the need to relocate the agricultural program first.
3. Member Ross: Asked about the additional DOE project planned near the teacher housing site.
   Ms. Nakamura: Mentioned that there will be an "arenasium" and described it as an outdoor athletic facility with a covering, similar to a covered play court, being developed at the tennis court area. This is mainly managed by the DOE and not the HiSFA.
4. Member Ozawa: Asked what an "arenasium" is.
   Ms. Nakamura: Explained it's an outdoor athletic event facility that could range from a simple tent to an elaborate structure with a roof.
5. Member Kaapana-Aki: Asked whether the project had gone out to bid.
   Ms. Nakamura: Clarified that as a public-private partnership, the project has already been awarded to Pacific Housing Assistance Corporation, a local nonprofit with 30-40 years of experience in affordable housing.
6. Mr. Gabriel (Public): Expressed concern about safeguards to protect students from potential inappropriate interactions with faculty living on campus.
   Ms. Nakamura: Acknowledged the safety concern was heard during community meetings and explained the housing would be in a separate area from the school, noting that the housing would serve teachers from across Oahu, not just Mililani High School.
7. Member Freed: Asked whether affordability concerns raised at previous meetings had been addressed.
   Ms. Nakamura: Stated they understand affordability is one of the most important issues and are working to make the housing as affordable as possible for educators.

IV. BOARD BUSINESS - [1:03:50]

Meeting Date, Time, Location, and Format - [1:03:55]: Chair Bass MOVED that the Mililani-Waipio-Melemanu Neighborhood Board No. 25 continue to meet on the fourth Wednesday of the month at 7:30 p.m. at Mililani High School with a virtual component. Member Smart seconded [1:04:30]. Member Gustafson proposed an amendment to change the meeting time to 7:00 p.m. [1:04:34]. She noted that of the 33 neighborhood boards, this was the only one meeting at 7:30 p.m., and earlier meetings could end before 10:30 p.m. Skyler Ross seconded [1:05:22]. A discussion was followed regarding school availability and the three-hour time limit for Olelo recording. The amendment to change the meeting time to 7:00 p.m. PASSED; 19-1-2 (Aye: Bass, Carmody, Flores, Freed, Gustafson, Inouye, Kaʻanehe, Kaapana-aki, Kim, Kinard, Marilyn Lee, Nagamine, Alex Ozawa, Katherine Ozawa, Park, Rana, Ross, Segura, Svrcina, and Williams. Nay: Smart. Abstain: Darsha Lee and Kinard) [1:09:41].
The amended motion to meet on the fourth Wednesday of the month at 7:00 p.m. at Mililani High School with a virtual component was ADOPTED; 21-0-2 (Aye: Bass, Carmody, Flores, Freed, Gustafson, Inouye, Kaʻanehe, Kaapana-aki, Kim, Kupukaa, Marilyn Lee, Nagamine, Alex Ozawa, Katherine Ozawa, Park, Rana, Ross, Segura, Smart, Svrcina, and Williams. Nay: None. Abstain: Darsha Lee and Kinard) [1:11:21].

Board Recess Schedule - [1:11:28]: Chair Bass opened discussion on the three recesses allotted for the term year (July 1, 2025 – June 30, 2026), cautioning against July recesses due to board reorganization requirements. Chair Bass MOVED and Member Gustafson **SECONDED to have 3 recesses, but to exclude July for the Boardʻs reorganizing [1:11:48]**. Member Gustafson requested to amend the motion to have only one recess in December instead of three recesses throughout the year, citing the importance of community access to the board [1:12:21]. Member Freed seconded [1:13:27]. There was a discussion followed regarding holiday conflicts, emergency meeting cancellations, board member absence policies and the possibility of moving the November 2025 meeting

to a different Wednesday. A roll call vote was conducted [1:20:15]. The amended motion to have one recess for December 2025 was ADOPTED; 20-0-3 (Aye: Carmody, Flores, Freed, Gustafson, Inouye, Kaʻanehe, Kaapana-aki, Kim, Kinard, Kupukaa, Darsha Lee, Marilyn Lee, Nagamine, Alex Ozawa, Katherine Ozawa, Park, Rana, Ross, Segura, Svrcina, and Williams. Nay: None. Abstain: Bass, Carmody, and Smart) [1:21:29].

Adoption of Oral Testimony Rules - [1:23:52]: Chair Bass MOVED and the motion was SECONDED that public comments be limited to two minutes, with presentation time allotment made by mutual agreement between the presenter and the Chair [1:23:52]. Member Freed MOVED for an amendment to increase the time limit to 5 minutes, but there was no second [1:24:13]. The motion FAILED. Member Kinard proposed an amendment to increase the time limit from two to three minutes. The amendment was seconded by Member Smart. The amendment to increase the public comments time limit to three minutes, with presentation time allotment made by mutual agreement between the presenter and the Chair was ADOPTED; 17-2-4 (Aye: Flores, Freed, Gustafson, Inouye, Kaʻanehe, Kaapana-aki, Kim, Kinard, Kupukaa, Marilyn Lee, Nagamine, Alex Ozawa, Park, Segura, Smart, Svrcina, and Williams. Nay: Katherine Ozawa, Darsha Lee. Abstain: Rana, Carmody, Ross, Bass.) [1:26:43].

Creation of Board Committees and Chairs - [1:27:04]: Chair Bass MOVED and Member Gustafson SECONDED to establish the following committees [1:28:02]:

1. Community Partnerships and Community Outreach
2. Community Recognition and Service Awards
3. Community Maintenance and Walk Audit
4. Planning, Zoning, Sustainable Development, and Climate Resilience
5. Transportation and Oahu Metropolitan Planning Organization
6. Military Affairs and Emergency Management
7. Health, Houselessness, and Human Services
8. Parks and Recreation & Patsy T. Mink Central Oahu Regional Park
9. Education

Member Gustafson proposed an amendment to remove "Patsy T. Mink Central Oahu Regional Park" from the Parks and Recreation committee name, noting it was redundant [1:28:13]. Chair Bass accepted the amendment as a friendly amendment. The motion to establish the committees as amended was ADOPTED; 23-0-0 (Aye: Bass, Carmody, Flores, Freed, Inouye, Kaʻanehe, Kaapana-aki, Kim, Kinard, Darsha Lee, Marilyn Lee, Nagamine, Gustafson, Alex Ozawa, Katherine Ozawa, Park, Rana, Ross, Segura, Smart, Svrcina, Williams, Kupukaa. Nay: None. Abstain: None.) [1:29:44].

V. Approval of Meeting Minutes - [1:30:00]

Approval of Wednesday, June 25, 2025 Regular Meeting Minutes - [1:30:18]: Member Gustafson MOVED to approve the Wednesday, June 25, 2025 Regular Meeting Minutes as written. The motion was SECONDED. The motion was ADOPTED; 23-0-0 (Aye: Bass, Carmody, Flores, Freed, Inouye, Kaʻanehe, Kaapana-aki, Kim, Kinard, Darsha Lee, Marilyn Lee, Nagamine, Gustafson, Alex Ozawa, Katherine Ozawa, Park, Rana, Ross, Segura, Smart, Svrcina, Williams, Kupukaa. Nay: None. Abstain: None.) [1:30:40].

VI. COMMUNITY CONCERNS - [1:30:52]: None.

ELECTED OFFICIALS' REPORTS - [1:31:10]

Office of Hawaiʻi's 1st Congressional District, Congressman Ed - [1:31:13]: No representative present.

Office of Hawaiʻi State Governor Josh Green - [1:31:28]: Toni Schwartz reported:

- New Fire Marshal: Announcement of the new Fire Marshal who started in June 2025.
- Hawaii Department of Human Services' 2025 SunBucks program providing $177 in nutritional support for eligible children during summer months. The program has served over 79,000 children ($13.9 million spent so far). The application deadline is August 3rd, 2025; website: sunbucks.dhs.hawaii.gov or call 888-975-7328.

Office of the City & County of Honolulu Mayor Rick Blangiardi - [1:33:54]: No representative present. Chair Bass noted the Mayor's report was uploaded to the neighborhood board's Google Drive.

- Newsletter: https://drive.google.com/file/d/1WtCU6e7btGwRLmcBmK3YV55M-6FK0H9p/view?usp=drive_link
- Report: https://drive.google.com/file/d/1PzX_rvaoZ_1GItFciIP7IGgVsETfjT5A/view?usp=drive_link

Office of the City & County of Honolulu Council District 8, Councilmember Val Okimoto - [1:34:18]: Aaron Wilson reported:

- Introduction of Bills 49 and 50 on June 27th, 2025 to amend real property tax exemptions.
  - Bill 49 would increase exemption for taxpayers 65 and older from $160,000 to $180,000.
  - Bill 50 would increase exemption for all homeowners from $120,000 to $140,000.
- Amendments proposed to increase exemptions to $300,000 for seniors and $250,000 for all homeowners.
- Update on crosswalk repainting.
- Follow-up on Transit Center Elevator: Damage was caused by arson, requiring replacement of the entire elevator shaft at an estimated cost of $250,000.
- Newsletter: https://drive.google.com/file/d/1iF5iWFKS7yjkaqwp6T8LW4ZZGmjKAltl/view?usp=drive_link

Questions, comments, and concerns followed - [1:36:56]

1. Member Carmody: Asked about insurance reimbursement for the elevator damage.
   Aaron Wilson: Stated he had not heard about any insurance claims but agreed that if insurance funds were allocated to the general fund, they should be reallocated to fix the elevator.
2. Member Katherine Ozawa: Asked about repairing potholes at Mililani Cemetery.
   Aaron Wilson: Explained that the roads are privately owned by two different owners, so the city likely wouldn't allocate resources to fix those roads.

Office of the City & County of Honolulu Council District 2, Councilmember Matthew Weyer - [1:39:42]: Kelly Anaya reported:

- The approved budget includes $4 million for Waipio ambulance unit facility, $900,000 for a multi-purpose playing field and parking lot at Patsy T. Mink Central Oahu Regional Park, and $800,000 for tree farm improvements.
- Councilmember co-introduced measures for real property tax relief (Bills 49 and 50).
- Councilmember shared the city's role in renewable energy goals at the 11th annual bioenergy sources forum.
- Update on addressing homeless situation near Waikalani Drive in coordination with HPD and the Army.

Questions, comments, and concerns followed - [1:42:49]

1. Member Smart: Asked about the homeless encampment near Waikalani Drive and whether anyone was working with private property owners in the area.
   Kelly Anaya: Clarified that when they visited, there were no individuals on the private property, only on military property, and they didn't observe any encampments on the private property.

Office of State Senate District 18, Senator Michelle Kidani - [1:44:12]: Trevor Nagamine reported he did not have the monthly newsletter but offered to take questions back to Senator Kidani.

Office of State Senate District 17, Senator Donovan Dela Cruz - [0:1:44:46]: Charles Miller reported:

- Governor Green signed the biosecurity bill renaming the Department of Agriculture to the Department of Agriculture and Biosecurity, establishing a deputy chair position, allocating $26.6 million for 44 new biosecurity positions, and allowing the governor to declare biosecurity emergencies.
- Senate Bill (SB) 933 allocates $50 million to nonprofits to combat federal funding cuts.
- SB222 extends the illegal fireworks task force to Sunday, June 30, 2030.
- Update on H2 Metal Plate Repair Going Northbound: Joint materials are being shipped from Missouri and should arrive by the end of July 2025, with project completion expected by mid-August 2025.

Office of State House District 38, Representative Lauren Matsumoto - [1:46:37]: No representative present.

Office of State House District 37, Representative Trish La Chica - [1:46:57]: Representative La Chica and intern Stella A. reported:

- Governor signed HB550 (Act 244) allowing drones to record over public property for fireworks enforcement.
- Update on the "arenasium" project at Mililani High School.
- Information on Mililani Cemetery Road maintenance issues.
- Governor signed House Bill (HB) 1231 (Safe Routes to Schools/Act 212) establishing the largest dedicated funding source for safe routes to school program.
- Invitation to the joint neighborhood board meeting on Wednesday, July 30, 2025 regarding the Kamananui Gondola project.
- Reminder that Preschool Open Doors is accepting applications for the 2025-2026 school year, with expanded eligibility under HB692 (Act 203).

Questions, comments, and concerns followed - [1:54:11]

1. Member Kaʻanehe: Asked for clarification on drone enforcement of illegal fireworks on private property.
   Representative La Chica: Explained that the law (HB550) only allows drones to record over public property, not private property, due to privacy concerns.
2. Member Freed: Asked why illegal fireworks on private property couldn't be prosecuted using drone evidence.
   Representative La Chica: Clarified that the current law only allows drones to record over public property, though illegal fireworks remain illegal.
3. Member Flores: Asked about SB933 and concerns about its constitutionality due to procedural issues.
   Representative La Chica: Acknowledged that amendments to the bill didn't receive the required three hearings and floor readings, but noted the governor signed it into law and they're proceeding with implementation.
4. Member Flores: Asked for clarification on whether nonprofits affected by federal funding cuts would be eligible for funds under SB933.
   Representative La Chica: Confirmed that such nonprofits would be eligible.

Office of State House District 46, Representative Amy Perruso - [1:59:44]: Representative Perruso reported:

- Details on the Wednesday, July 30, 2025 joint meeting at Leilehua High School from 6:30 p.m. to 9:30 p.m.
- Announcement of a sign-waving event on Sunday, July 27, 2025 from 10:00 a.m. to 11:30 a.m. on the Waimea side of the Haleiwa Bypass to raise awareness about the gondola project.
- The Good Government Caucus will be having a meeting at the Capitol to discuss open government, public access, transparency, campaign finance reform, ethics, and elections.
- Updates on interim work including review of passed legislation, implementation effectiveness, and preparation for the upcoming session.

- Concerns about impacts of the OBBBA (One Big Beautiful Bill Act) even though it won't take effect until December 2026.

Questions, comments, and concerns followed - [2:03:36]

1. Mr. Gabriel (Public): Asked for clarification on the start time of the July 30th meeting.
   Chiar Bass: Confirmed the meeting would start at 6:30 p.m.

VII. ANNOUNCEMENTS - [2:04:13]

Special Joint Meeting: Special joint meeting with North Shore Neighborhood Board #27, Wahiawa Neighborhood Board #26, and Mililani Mauka/Launani Valley Neighborhood Board #35 on Wednesday, July 30th at 6:30 p.m. at Leilehua High School cafeteria. The meeting will be hybrid format and will not count against board members' attendance records. The Department of Planning and Permitting and the developer declined invitations to present. The meeting will include presentations on the Kamananui project and potential legislation prohibiting passenger ropeways on mountain land. North Shore Neighborhood Board will introduce a resolution on the project.

Next Board Meeting: The next scheduled regular board meeting will be held on Wednesday, August 27, 2025 at 7:00 pm. at Mililani High School – H Building.

Broadcast: Videotaping of Board meetings are scheduled to be shown on ʻŌlelo Focus 49, Every Second Thursday at 9:00 a.m., and on ʻŌlelo Views 54, Every First and Third Saturday at 9:00 a.m.

ADJOURNMENT - [2:10:06]

The meeting adjourned at 9:39 p.m.

Submitted by: Rachel Cristobal, Neighborhood Assistant, NCO
Reviewed by: Dylan Whitsell, Deputy. NCO
Finalized by: Sabrina Gustafson

MILILANI/ WAIPIʻO/ MELEMANU NEIGHBORHOOD BOARD NO. 25

NEIGHBORHOOD COMMISSION • 925 DILLINGHAM BOULEVARD, SUITE 160 • HONOLULU, HAWAIʻI 96817
PHONE (808) 768-3710 • FAX (808) 768-3711 • WEBSITE: honolulu.gov

REGULAR MEETING AGENDA

WEDNESDAY, AUGUST 27, 2025 at 7:00 P.M.
MILILANI HIGH SCHOOL – H BUILDING
95-1200 MEHEULA PARKWAY, MILILANI, HI 96789
AND VIRTUAL VIA WEBEX

Meeting Link: https://cchnl.webex.com/cchnl/j.php?MTID=m369359c4e541c9a75488c5659a6601ad
Meeting Number / Access Code: 2482 424 7186
Passcode: NB25 (6225 from phones and video systems)
Join by Video System: Dial 24887188225@cchnl.webex.com
Join by Phone: +1-408-418-9388 United States Toll

Google Drive: https://drive.google.com/drive/folders/1kK0RlwlrULOHw3HFRCLnoiy8MZLoYk8D?usp=drive_link

Rules for Virtual Participation and Speaking: Anyone wishing to speak is asked to raise their hand, and when recognized by the Chair, to address comments to the Chair. Speakers are encouraged to keep their comments under three (3) minutes, and those giving reports are urged to keep their reports to less than three (3) minutes. Please silence all electronic devices.

Written Testimony: All written testimony must be received in the Neighborhood Commission Office 48 hours prior to the meeting. If within 48 hours, written and/or oral testimony may be submitted directly to the board at the meeting. If submitting written testimony, please note the board and agenda item(s) your testimony concerns. Send to: Neighborhood Commission Office, 530 South King Street, Room 406, Honolulu, HI 96813. Fax: (808) 768-3711. Email: nbtestimony@honolulu.gov

I. CALL TO ORDER – Chair Danielle M. M. Bass
   A. Pledge of Allegiance, Public Notice, Roll Call/Quorum

II. MONTHLY REPORTS (Limited to three (3) minutes each)
   A. Honolulu Fire Department
   (*Monthly report; fire and emergency incident statistics for this community's jurisdiction for July* – Aug 2025, HFD safety tips reminders, and upcoming events)
   B. Honolulu Police Department
   (Monthly report; crime and *incident statistics for this community's jurisdiction for July* – Aug 2025, HPD safety tips, reminders, and upcoming events)
   C. U.S. Army – Combat Aviation Brigade, 25th Infantry Division
   (Monthly report; updates on previous and current questions / concerns, safety tips, reminders, and upcoming events)
   D. Board of Water Supply (BWS)
   (*Monthly report; water main break incidents and statistics for this community's jurisdiction for July* – Aug 2025; BWS tips, reminders, and upcoming events)
   E. State of Hawaiʻi School Facilities Authority (HiSFA)
   (Monthly report and status update of Mililani High School Workforce Housing project; updates on previous and current questions / concerns, reminders, and upcoming events)

III. APPROVAL OF MEETING MINUTES: Wednesday, July 23, 2025 Regular Meeting Minutes
Wednesday, July 30, 2025 Joint Meeting Special Meeting Minutes

IV. COMMUNITY CONCERNS (Limited to three (3) minutes each)
   A. Report Of Any Events or Concerns Within the Community
   Any community member can come forward and express any comment or concern within decorum. Please, limit your comments to three (3) minutes each per issue for items not on the agenda.

V. PRESENTATIONS (Limited to seven (7) minutes each)
   A. Environmental Assessment Process for the Mililani High School Teacher Workforce Housing Project – Cheri Nakamura, State School Facilities Authority
   B. Brief Update on the Proposed Kamananui Gondola Agri-Tourism Project at Mt. Kaʻala – Kathleen Pahinui, Chair, and Racquel Achiu, Vice Chair, North Shore Neighborhood Board; Gil Riviere, Keep the North Shore Country; and Maka Casson-Fisher, Waialua Hawaiian Civic Club

VI. BOARD BUSINESS
   A. Resolution on the Proposed Kamananui Gondola Agri-Tourism Project at Mt. Kaʻala

B. Rescheduling of the Neighborhood Board 25 Wednesday, November 26, 2025 meeting to Wednesday, November 19, 2025 at 7:00 P.M. at Mililani High School – H Building.

VII. REPORTS OF CHAIRS AND BOARD COMMITTEES (Limited to three (3) minutes each)

A. Chair's Report
B. Community Partnerships and Community Outreach – Kate Ozawa, Chair
C. Community Recognition and Service Awards – Josie Kaʻanehe, Chair
D. Community Maintenance and Walk Audit – Ken Inouye & Skyler Ross, Co- Chairs
   1. Neighborhood Board Walk Form: https://forms.gle/3YeivtfDyT6VaAi1A
E. Planning, Zoning, Sustainable Development, and Climate Resilience – Trevor Nagamine, Chair
F. Transportation & OMPO – Ed Flores, Chair
G. Military Affairs and Emergency Management – Dennis Kim, Chair
H. Health, Houselessness, and Human Services – Darsha Lee, Chair
I. Parks and Recreation – Sabrina Gustafson, Chair
J. Education – Marilyn Lee, Chair

VIII. ELECTED OFFICIALS REPORTS (Limited to three (3) minutes each)

A. Office of Hawaiʻi's 1st Congressional District, Congressman Ed Case – Nestor Garcia
B. Office of Hawaiʻi State Governor Josh Green – Toni Schwartz, Governor's Representative
C. Office of the City & County of Honolulu Mayor Rick Blangiardi– Mayor's Representative
D. Office of the City & County of Honolulu Council District 8, Councilmember Val Okimoto
E. Office of the City & County of Honolulu Council District 2, Councilmember Matthew Weyer
F. Office of State Senate District 18, Senator Michelle Kidani
G. Office of State Senate District 17, Senator Donovan Dela Cruz
H. Office of State House District 38, Representative Lauren Matsumoto
I. Office of State House District 37, Representative Trish La Chica
J. Office of State House District 46, Representative Amy Perruso

IX. ANNOUNCEMENTS

A. Next Board Meeting: The next scheduled board meeting will be held on Wednesday, September 24, 2025, at 7:00 pm. Location: Mililani High School – H Building.
B. Broadcast: Videotaping of Board meetings are scheduled to be shown on ʻŌlelo Focus 49, Every Second Thursday at 9:00 a.m., and on ʻŌlelo Views 54, Every First and Third Saturday at 9:00 a.m.

X. ADJOURNMENT

A mailing list is maintained for interested persons and agencies to receive this board's agenda and minutes. Additions, corrections, and deletions to the mailing list may be directed to the Neighborhood Commission Office (NCO) at Kapālama Hale, 925 Dillingham Boulevard, Suite 160 Honolulu, Hawaiʻi 96817; Telephone (808) 768-3710 Fax (808) 768-3711; or call Neighborhood Assistant Rachel Cristobal at (808) 768-3708 or e-mail nco@honolulu.gov . Agendas and minutes are also available on the internet at www.honolulu.gov/nco.

All written testimony must be received in the Neighborhood Commission Office 48 hours prior to the meeting. If within 48 hours, written and/or oral testimony may be submitted directly to the board at the meeting. If submitting written testimony, please note the board and agenda item(s) your testimony concerns. Send to: Neighborhood Commission Office, 925 Dillingham Boulevard, Suite 160 Honolulu, Hawaiʻi 96817. Fax: (808) 768-3711. Email: nbtestimony@honolulu.gov.

If you need an auxiliary aid/service or other accommodation due to a disability or an interpreter for a language other than English, please call the Neighborhood Commission Office at (808) 768-3710 between 8:00 a.m. and 4:00 p.m. or send an email to nco@honolulu.gov at least three (3) business days before the scheduled meeting. It may not be possible to fulfill requests received after this date.

MILILANI - **WAIPIʻO** - MELEMANU NEIGHBORHOOD BOARD NO. 25

NEIGHBORHOOD COMMISSION | 925 DILLINGHAM BOULEVARD SUITE 160 | HONOLULU, HAWAIʻI, 96817
PHONE (808) 768-3710 | FAX (808) 768-3711 | WEBSITE: http://www.honolulu.gov/nco

REGULAR MEETING WRITTEN SUMMARY FOR VIDEO RECORD
WEDNESDAY, AUGUST 27, 2025 - 7:00 P.M.
MILILANI HIGH SCHOOL H BUILDING – 95-1200 MEHEULA PKWY, MILILANI, HI 96789 AND VIA WEBEX

Video recording of this meeting can be found at:
https://www.youtube.com/watch?v=i82EKbf0CjY&list=PLfqRwVpRrookBIqlihQKmGtTyJzCcOQEW

Reports & other meeting materials can be found at:
https://drive.google.com/drive/folders/1kK0RlwlrULOHw3HFRCLnoiy8MZLoYk8D?usp=drive_link

I. CALL TO ORDER – [0:00:00]

Chair Bass called the Mililani/Waipi'o/Melemanu Neighborhood Board No. 25 meeting to order at 7:05 p.m due to needing more time to set the room. The Board recited the Pledge of Allegiance followed by Chair Bass recited the rules of speaking. Neighborhood Assistant Rachel Cristobal conducted the roll call. Quorum WAS established with seventeen (17) members present – [0:02:51] Note: This twenty-three-member Board requires twelve (12) members to establish quorum and to take official Board action.

Members Present: Danielle Bass, Ed Flores, Ann Freed, Sabrina Gustafson, Ken Inouye, Dennis Kim, Darsha Lee, Mary Smart, Emil Svrcina, Sharon Williams, Marilyn Lee, Trevor Nagamine, Alex Ozawa, Kate Ozawa, Rana Rudy, Rodney Park, Kurumi Kaʻapana-Aki, Martina Segura (joined at 7:11 p.m.), Skyler Ross (joined at 7:12 p.m.), Josie Kaʻanehe (joined at 7:13 p.m.), Brandon Kinard (joined at 7:18 p.m.), and Katherine Kupukaʻa (joined at 7:59 p.m.).

Members Absent: Elise Carmody.

Guests: Honolulu Fire Department; Lieutenant Scott Vierra (Honolulu Police Department); Sergeant Olivia Cowart (US Army); Kathleen Pahinui (Board of Water Supply); Cheri Nakamura (State of Hawaiʻi School Facilities Authority); Audrey Awaya, Karen Arakawa, and Lacey Shimabukuro (Pacific Housing Assistance Corporation); Raquel Achiu (North Shore Neighborhood Board); Jocelyn Doane (Mayor Blangiardi's Representative); Pua Smith (Council Member Okimoto's Office); Kelly Anaya (Council Member Weyer's Office); Charles Miller (Senator Dela Cruz's Office); Tosa Lobendahn (Representative La Chica's Office); Mike Buck (C.O.R.E.); Sierra Martin (KWO District 2&3); Brandon, JG, Kara, Keoni, Nathan Hokama, Omri Ram, Paige Thomas, Val, Doris Kuwano, Valerie Gawa, Daniel Michael Gabriel, Robin Nelson, and Maka Casson-Fisher (Residents and Guests). Note: Name not included if not legible or stated for the record. There were approximately 59 total participants.

II. MONTHLY REPORTS – [0:03:02]

Honolulu Fire Department – [0:03:26]: The firefighter reported the following:

- Report: https://drive.google.com/file/d/1q3-QtM4SyXGTJFxo4JkW4BhwXo1V79GK/view?usp=drive_link
- Fireworks Incident Question from the Previous Month: One reported fireworks-related incident island-wide from July 4-5, 2025.
- July 2025 Statistics: Zero structure fires, five wildland/brush fires, two nuisance fires, one cooking fire, four activated alarms with no fire, 76 medical emergencies, zero motor vehicle collisions with pedestrians, six motor vehicle crashes/collisions, and zero mountain rescues, ocean rescues, and hazmat incidents.
- Emergency Notifications and Resources: Information shared about opt-in alerts (HNL Alert, government social media) and public alert systems (Emergency Alert System, Wireless Emergency Alerts, outdoor warning sirens).

Segura joined at 7:11 p.m.; 18 members present.

Honolulu Police Department – [0:06:51]: Lieutenant Scott Vierra reported the following:

- July 2025 Crime Statistics: Four assaults, zero robberies, two burglaries, seven unauthorized entries into motor vehicles, and 802 total calls for service in the past month.
- Back-to-School Safety Tips: Reminders to ensure proper vehicle maintenance, plan ahead for traffic, avoid using phones while driving, and be courteous to pedestrians as schools are back in session.

Ross joined at 7:12 p.m.; 19 members present.
Kaʻanehe joined at 7:13 p.m.; 20 members present.

Questions, comments and concerns – [0:08:05]

1) Vehicle Safety Enforcement: Gustafson asked if she could report vehicles with expired registration and safety inspection by taking pictures. Lieutenant Vierra responded that officers need to see vehicles on public roadways to issue citations, and confirmed HPD can access vehicles in Milani Town Center parking lot.
2) School Parking Issues: A Board Member asked about parking at Mililani Mauka Middle School during drop-off times. Lieutenant Vierra acknowledged the issue and said he would include it in his report and ask officers to monitor the area.
3) Intersection Safety Concerns: Flores expressed a concern about drivers running red lights at the Meheula Parkway and Lanikuhana Avenue intersection. Lieutenant Vierra acknowledged the monitoring challenges but suggested residents report specific violations with license plate numbers.

4) HPD Substation Proposal: Kaʻapana-Aki inquired about the possibility of HPD occupying the old Ruby Tuesday location as a substation. Lieutenant Vierra was not aware of any plans but offered to check with supervisors.
5) Reporting Minors on Mopeds and Harassing Her Property: Doris Kuwano asked about reporting minors operating mopeds without licenses and with passengers. Lieutenant Vierra advised calling 911 to report violations but noted officers would need to witness the violation. She also asked what she can do when she encounters a minor harassing her and her property such as throwing litter. Lieutenant Vierra confirmed that she can call HPD and they will investigate.
6) Roadside Memorial Safety: Valerie Gawa expressed concerns about a memorial on Kipapa Gulch creating a hazard for drivers. Lieutenant Vierra advised calling 911 if people are on the roadway but noted police don't remove memorials.

Kinard joined at 7:18 p.m.; 21 members present.

US Army – 25th Infantry Division – [0:18:22]: Sergeant Olivia Cowart reported the following:
- Job Opportunities: Positions in business operations and child youth services.
- Training Advisory: She also provided information on training activities that took place in August 2025 and announced the upcoming Joint Pacific Multinational Readiness Center (JPMRC) exercise between October and November 2025, which will increase traffic and noise. For concerns, residents can call the community concern line at 808-787-1528.

Board of Water Supply – [0:22:43]: Kathleen Pahinui reported the following:
- Report: No main breaks in the community last month.
- Imagine a Day Without Water: https://drive.google.com/file/d/1KKu60-NguSdnHH-Uy3fnHZr7d1RPrjdZ/view?usp=drive_link
  The "Imagine a Day Without Water" event is on Saturday, September 20, 2025 at Windward Mall, which will feature state and city agencies, nonprofit organizations, workshops, and prize giveaways.

Questions, comments and concerns – [0:23:41]
1. Red Hill Lawsuit Update: Darsha Lee asked about updates on the lawsuit against the Navy for the $1.2 billion Red Hill cleanup. Kathleen Pahinui responded that she could not discuss the ongoing lawsuit but would share information when possible.
2. Recent Water Main Break: Williams noted there was a water main break by her house the previous day. Kathleen Pahinui explained that reports typically lag a month behind, so this incident would be included in next month's report.

State of Hawaiʻi School Facilities Authority (HiSFA) – [0:25:07]: Cheri Nakamura requested to combine her monthly report with her presentation later in the meeting. Chair Bass accepted her request.

III. APPROVAL OF MEETING MINUTES – [0:25:41]

Wednesday, July 23, 2025 Regular Meeting Minutes – [0:25:54]: Gustafson explained that the Neighborhood Commission Office is now using AI to format the minutes, which identifies speakers, summarizes concerns, and includes questions. She received no corrections to the minutes. Gustafson MOVED and Kaʻapana Aki SECONDED to approve the Wednesday, July 23, 2025 Regular Meeting Minutes. The motion was ADOPTED; 21-0-0 (Aye: Bass, Flores, Freed, Gustafson, Inouye, Kim, Darsha Lee, Smart, Svrcina, Williams, Marilyn Lee, Nagamine, Alex Ozawa, Kate Ozawa, Rana, Park, Kaʻapana-Aki, Segura, Ross, Ka'anehe, Kinard. Nay: None. Abstain: None.) – [0:27:09].

Wednesday, July 30, 2025 Joint Meeting Special Meeting Minutes – [0:27:25]: Gustafson MOVED and Smart SECONDED to approve the Wednesday, July 30, 2025 Joint Meeting Special Meeting Minutes. The motion was ADOPTED; 21-0-0 (Aye Bass, Flores, Freed, Gustafson, Inouye, Kim, Darsha Lee, Smart, Svrcina, Williams, Marilyn Lee, Nagamine, Alex Ozawa, Kate Ozawa, Rana, Park, Ka'apana-Aki, Segura, Ross, Ka'anehe, Kinard. Nay: None. Abstain: None.) – [0:28:09].

IV. COMMUNITY CONCERNS – [0:28:22]

Park Safety Hazards – [0:29:00]: Daniel Gabriel reported safety concerns at Mililani District Park, including a hole where an old football goalpost was located, a missing slide with a sharp metal support at the playground, and baseball fields needing watering. He offered to provide photos of the repairs he made at his own expense (hole at the old football goalpost).

Pedestrian Safety at Shopping Center – [0:32:35]: Resident Valerie expressed concerns about drivers not stopping at stop signs in the Mililani Town Center Shopping Center, particularly between Raising Canes and Taco Bell and at the Walmart exit. She noted that HPD cannot ticket drivers on private property and security is not monitoring the situation.

V. PRESENTATIONS – [0:34:24]

EA (Environmental Assessment) Process for the Mililani High School Teacher Workforce Housing Project – [0:34:36]: Cheri Nakamura presented the following:
- Mililani High School Teacher Workforce Housing Project Update Presentation: https://drive.google.com/file/d/11TweSd6LtHZ6zZTRo04TmkYHMu4GEpqa/view?usp=drive_link
  The environmental assessment will begin next month with pre-assessment consultation letters to identify potential environmental issues early. The assessment will address traffic, flora and fauna, archaeological resources, impacts to cultural practices, noise, and other environmental resources. A draft EA is expected in Q1 2026, with a public meeting planned for early 2026 and the final EA anticipated by May 2026.

- Pacific Housing Assistance Corporation: Cheri announced that they are a nonprofit developer with over 40 years of experience and is the partner for this project. She also introduced a few members from the Pacific Housing Assistance Corporation.

Questions, comments and concerns – [0:39:21]

1. Project Location and Access: Kaʻapana Aki asked for clarification on the project location and whether it would include the gymnasium parking area. Audrey Awaya explained they would create a new ingress/egress off Meheula Parkway rather than using the existing high school entrance.
2. Separation from School: Smart inquired about how the housing would be separated from the high school. Audrey Awaya confirmed they would completely fence the project site with an attractive barrier.
3. Community Participation: Gustafson asked how the community could participate in the EA process. Karen Arakawa and Lacey Shimabukuro explained that letters requesting comments would be sent to the Mililani area, and there would be a public comment period when the draft EA is published.
4. Housing Affordability: Darsha Lee expressed concern about the pricing for teacher housing. Audrey Awaya responded that they are still redesigning the project and will return with details once the design and analysis are complete.
5. Income-Based Pricing: Freed asked if affordability would be based on income rather than real estate prices, noting teacher salaries average $55,000. Audrey Awaya confirmed rents would be based on income according to HUD (Housing and Urban Development) guidelines, with options for teachers to share units to lower costs.
6. Parking Impact Concerns for School Events: Kim expressed concerns about the impact of the School Housing Project on parking availability for school events at Mililani High School. He noted that the project area (marked in red on the map) appears to include the parking lot currently used by visitors attending football and volleyball games, which is accessed via the entrance at Anania Drive and Meheula Parkway. Kim wants to see how parking for sports events will be addressed in the final project plans.
7. Staff Housing and Amenities: Kaʻanehe asked if housing would be for all educational staff and suggested including in-unit laundry facilities. Audrey Awaya confirmed housing would be for all educational staff, and thanked her for the laundry suggestion.
8. Traffic Assessment: Chair Bass asked about traffic considerations for the new ingress/egress on Meheula Parkway. Lacey Shimabukuro explained they would conduct a traffic impact assessment with counts at five intersections along Meheula Parkway. Chair Bass also asked how long the surveys will take. Lacey reported that she believes that it'll take several hours at each intersection during the morning and afternoon peaks for about a week.
9. Community Outreach: Chair Bass inquired about a dedicated website and outreach for the EA process. Lacey Shimabukuro noted that HiSFA has a website that will post updates, and comments will be directed to their environmental assessment consultant.
10. Rental Terms: Robin Nelson asked about the length of rental agreements and the legal basis for restricting housing to educators. Audrey Awaya explained leases would typically be 12-month terms followed by month-to-month, while Cheri Nakamura noted that federal funding requirements would allow preference for educators but not strict restriction.
11. Hawaiian Language Teachers: Maka Casson-Fisher suggested including Hawaiian language program teachers in the priority list, noting difficulties finding housing for these educators. The presenters acknowledged this input.
12. Addressing Infrastructure Problems: Gustafson asked whether the Environmental Assessment (EA) will address the infrastructure problems with Site B, specifically the $5 million cost to connect sewer lines that was a concern from previous discussions. The project team responded that the EA will address all infrastructure needs of the project, including location and hookup requirements.
13. Long-term Occupancy: Kaʻapana Aki expressed concerns about potential future occupancy by non-educators and light pollution affecting nearby residential areas. Audrey Awaya clarified the housing is for any teacher, not just new ones, and they're confident demand from educators will fill the units.
14. Federal Funding Implications: Smart worried that federal funding requirements would invalidate the purpose of teacher housing. Audrey Awaya explained they plan to use low-income housing tax credits which allow preferences for educators while following federal rules.

Kupukaʻa joined at 7:59 p.m.; 22 members present.

Brief Update on the Proposed Kamananui Gondola Agri-Tourism Project at Mt. Kaʻala – [1:09:59]: Kathleen Pahinui reported that the developer had called the Department of Planning and Permitting (DPP) about withdrawing their conditional use permit modification but had not submitted a formal letter. Council Member Weyer is monitoring the situation. The Diamond Head Neighborhood Board passed a resolution opposing the project, and Waiʻanae-Nānākuli will be holding a special board meeting on the issue.

Questions, comments and concerns – [1:14:31]

1. Permit Status: Gustafson asked if the developer could continue construction under the original minor permit even if they withdrew the modification request. Kathleen Pahinui confirmed they still have the minor permit but are pursuing options to challenge it as flawed. Gustafson also asked if DPP has already authorized the minor permit approval and if it was possible to ask DPP to reassess the approval. Kathleen Pahinui said yes.
2. Permit Resolution Strategy: Gustafson asked whether to draft a second resolution for permit reassessment or keep the current one. Kathleen Pahinui responded that the current resolution is good and it echoes on what their Board is trying to do. Chair Bass noted that the existing resolution already covers this concern in its fourth clause, which urges DPP to deny the minor modification and requires the applicant to pursue a major permit that would trigger an Environmental Impact Statement and community consultation. Therefore, a second resolution isn't necessary since reassessment is already addressed.
3. Current Status Clarification: Nagamine asked if anything had changed since the Wednesday, July 30, 2025 meeting. Kathleen Pahinui confirmed that nothing has changed - both the original permit and modification application remain active.

4. Developer Communication: Kim asked if the developer had reached out to Neighborhood Boards. Kathleen Pahinui shared that they received a last-minute letter from the developer asking her to distribute information, which she found condescending.
5. Construction Activity: Ka'anehe asked if construction had started. Raquel Achiu reported they have documented trail construction for ATVs and dirt bikes, significant digging without cultural monitoring, and small structures claimed to be agricultural accessories.
6. Grading Violations: Nagamine sought clarification about whether grading permission was separate from the CUP (Conditional Use Permit) and confirmed that the applicant was already conducting grading activities without proper permits from DPB (Department of Planning and Building). Raquel Achiu confirmed this was correct. Flores asked if the City considers the grading a violation and if it had been reported. Raquel Achiu confirmed she had reported it with footage to DPP, who are planning to send inspectors. Kaʻapana Aki added that violators typically just pay fines without restoring the land.

VI. BOARD BUSINESS **–** [1:23:21]

Resolution on the Proposed Kamananui Gondola Agri-Tourism Project at Mt. Ka'ala – [1:23:21]:
Chair Bass MOVED and Kate Ozawa SECONDED to adopt the resolution urging the City and County of Honolulu Department of Planning and Permitting to deny Kaukonahua Ranch's conditional use permit modification for the Kamananui project on the slopes of Mount Ka'ala – [1:23:42]. There was a brief discussion. Kaʻapana Aki expressed concern that the resolution should acknowledge the entire Mount Ka'ala as sacred, not just parts of it. Chair Bass explained she rewrote the resolution to focus on environmental impacts and proper permitting rather than debating the mountain's sacredness. Nagamine emphasized that the developer used regulatory loopholes to get approval and has been adversarial with the community, with evidence they're disregarding the law. He stated the resolution asks the DPP to enforce proper procedures. The motion was ADOPTED; 21-0-0 (Aye: Rana, Kate Ozawa, Inouye, Flores, Freed, Gustafson, Kaʻanehe, Kaʻapana-Aki, Kim, Kupukaʻa, Darsha Lee, Marilyn Lee, Nagamine, Alex Ozawa, Park, Segura, Smart, Svrcina, Kinard, Williams, Bass. Nay: None. Abstain: None.) (Note: Ross did not cast a vote when called.) – [1:31:34].

Rescheduling of the Neighborhood Board 25 Wednesday, November 26, 2025 meeting to Wednesday, November 19, 2025 at 7:00 P.M. at Milani High School – H Building – [1:31:59]: Chair Bass announced that Ross MOVED and Nagamine SECONDED to reschedule the Wednesday, November 26, 2025 meeting to Wednesday, November 19, 2025. There was a brief discussion. Gustafson noted that the Mililani Town Association board meeting is scheduled for the same day, affecting representatives and some board members. Nagamine suggested members could alternate between Zoom windows in the hybrid format. Kaʻanehe asked if she would be excused if unable to attend due to the conflict. Chair Bass clarified that according to the Neighborhood Plan, there are no excused absences, so it would count as an absence. The motion was ADOPTED; 13-5-2 (Aye: Kate Ozawa, Inouye, Flores, Freed, Kim, Kupukaʻa, Darsha Lee, Marilyn Lee, Nagamine, Alex Ozawa, Segura, Kinard, Bass. Nay: Gustafson, Ka'anehe, Park, Svrcina, Williams. Abstain: Rana, Smart.) (Note: Ross and Kaʻapana Aki did not cast a vote when called) – [1:37:17].

VII. REPORTS OF CHAIRS AND BOARD COMMITTEES **–** [1:37:37]

Chair's Report – Danielle Chair Bass – [1:37:37]

- New/Continuing Committee Chair Appointees: Chair Bass announced several committee leaderships changes during the report. Kate Ozawa replaced Alex Ozawa as chair of Community Partnerships and Community Outreach and has already begun social media outreach efforts. Ken Inouye and Skyler Ross were appointed as co-chairs for Community Maintenance and Walk Audit, replacing Martina Segura who had other commitments. Ed Flores was appointed as the new chair of Transportation and OMPOS, taking over from Skyler Ross who stepped down due to potential conflicts of interest in the transportation sector. Several chairs are continuing in their current roles, including Josie Ka'anehe for Community Recognition and Service Awards, Trevor Nagamine for Planning and Zoning, Dennis Kim for Military Affairs, Darsha Lee for Health and Human Services, Sabrina Gustafson for Parks and Recreation, and Marilyn Lee for Education. These appointments balance new leadership with experienced continuity across the board's committees.
- Mililani Straub's New Location: The opening of Mililani Straub's new facility next to Popeyes in the Mililani Town Center.

Community Partnerships and Community Outreach – Kate Ozawa, Chair – [1:40:50]: Kate Ozawa reported that she has begun working with Chair Bass and Kathleen Pahinui on the social media outreach, including posting about canceled water outages on Instagram.

Community Recognition and Service Awards – Josie Ka'anehe, Chair – [1:41:29]: No report, but Kaʻanehe asked Kate Ozawa a question if the social media outreach is for Facebook and Instagram. Kate Ozawa responded that she only has access to Instagram.

Community Maintenance and Walk Audit – Ken Inouye & Skyler Ross, Co-Chairs – [1:41:52]: No report as they were newly appointed.

Planning, Zoning, Sustainable Development, and Climate Resilience – Trevor Nagamine, Chair – [1:42:02]: No report.

Transportation & OMPO – Ed Flores, Chair – [1:42:07]: No report as he was newly appointed.

Military Affairs and Emergency Management – Dennis Kim, Chair – [1:42:18]

- Helicopter Facility Tour: Kim reported that the 25th Aviation Brigade is considering allowing the neighborhood board to tour their helicopter facilities, potentially in September or October 2025. He asked interested board members to let him know as several people have shown interest. Kim informed that Chair Bass recommended him to go through the Neighborhood Assistant Rachel Cristobal to pass the information out.

Questions, comments and concerns – [1:43:40]

1. Interest: Kate Ozawa expressed her interest in participating especially if it can be scheduled anytime except for weekdays during normal work hours.

Health, Houselessness, and Human Services – Darsha Lee, Chair – [1:44:12]: No report.

Parks and Recreation – Sabrina Gustafson, Chair – [1:44:25]:

- Survey & Concrete Enclosure: Gustafson reported that she is waiting for Chair Bass to review her survey regarding the dog park presentation. She will bring concerns about Mililani District Park to the Department of Parks and Recreation. She is also investigating an issue at Kuahelani Neighborhood Park where the city installed boards across a concrete enclosure where people were dumping items, which has not solved the problem.

Education – Marilyn Lee, Chair – [1:45:57]

- Report: https://drive.google.com/file/d/15MOXp6MB2zvN3t6zoDEoIsYHX3LXZxpw/view?usp=drive_link
  Marilyn Lee shared updates from Mililani Middle School, including their work with a college recruiter from UNLV (University of Nevada, Las Vegas) to bring college preparatory presentations to 8th-grade students, plans to host various organizations during lunch periods, and the upcoming Mililani Complex Elementary Cross-Country Meet on Wednesday, October 22, 2025. She also mentioned Mililani Middle School's haunted house and family fun night on October 24-25, 2025 and Mililani Uka's Cross Country Club with nearly 150 student participants.

Ross left at 8:53 p.m.; 21 members present.

VIII. ELECTED OFFICIALS REPORTS – [1:48:30]

Office of Hawaiʻi's 1st Congressional District, Congressman Ed Case – [1:48:33]: No representative present.

Office of Hawaiʻi State Governor Josh Green – [1:48:45]: No representative present.

Office of the City & County of Honolulu Mayor Rick Blangiardi – Jocelyn Doane – [1:49:03]:

- Introduction: Jocelyn Doane introduced herself as the new Deputy Director for the Department of Enterprise Services, overseeing the zoo, city golf courses, Neal Blaisdell Center, Waikiki Shell, and city concessions. She shared that she is a Mililani High School graduate and former teacher. She announced new cabinet appointments and land acquisitions, including a property on Ala Wai for affordable housing and a parcel next to HPD headquarters on Beretania Street.
- Newsletter: https://drive.google.com/file/d/1UFA5TiOMcEQGtm-Uj2OL6JmsGwIoUy0L/view?usp=drive_link

Questions, comments and concerns on the listed agenda item followed – [1:52:06]

1. Park Construction Timeline: Darsha Lee asked what is the construction at Kamaio Park and when the sidewalk would be restored.
2. Sidewalk Construction Safety: Marilyn Lee inquired when the sidewalk construction on Kipapa Drive where it intersects with Kuahelani Avenue before the shopping center will be complete, noting concerns for elderly pedestrians since a lot of them shop. The sidewalks are ripped up and there are signs stating sidewalks are not available. She also mentioned Ikaloa Street/Kuahelani Avenue could be impacted with the sidewalk construction.
3. DPP (Department of Planning and Permitting) Data Migration Issues: Freed described problems with DPP's data migration causing lost permit data, affecting her condo community's pipe replacement project. Jocelyn Doane explained that software upgrades are meant to be helpful but acknowledged short-term challenges, offering to get specific contact information for technical support.

Segura left at 8:58 p.m.; 20 members present.

Office of the City & County of Honolulu Council District 8, Councilmember Val Okimoto – [1:57:02]:

- Announcements: Pua reported that Bill 49-50 passed out of committee and is going to the full council. Councilmember Okimoto attended the blessing of the new Straub clinic at Mililani Town Center, which opened on August 25 providing urgent care, primary care, and specialty services. She also witnessed the swearing-in of the Honolulu Youth Commission, including Mililani resident Abiyana Moore. The Department of Transportation is seeking funding from the Department of Budget and Fiscal Services for the burned elevator at Mililani Town Center. A mattress dumped at Kuahelani Neighborhood Park was removed, and a "no dumping" sign will be installed.
- Newsletter: https://drive.google.com/file/d/13mr6kVXTu9yL4ChfmfT-M-vwjrLZIcv_/view?usp=drive_link

Questions, comments and concerns – [2:00:27]

1. Park Dumping Solution: Gustafson explained that the City's solution of installing boards on the concrete structure at Kuahelani Park created a permanent dumping area rather than solving the problem. She added that they need to know what the little enclosure is for and whether it can be removed or not. Pua said she would report this to the office and explore options to eliminate the dumping site.
2. Red Light Camera Program: Gustafson asked about expanding the red-light camera program, particularly at the intersection by Ruby Tuesdays. Pua offered to check with the Department of Transportation Services and state agencies about the program's status and potential expansion.

3. Traffic Pattern Concerns: Darsha Lee questioned the traffic pattern changes at Iwilei and Nimitz, where an HOV lane merges into regular traffic, and asked about the 24/7 construction schedule despite little visible work. Pua explained she would follow up with the Department of Transportation Services about both the design rationale and work schedule.
4. Additional Intersection Safety: Flores suggested adding red light cameras at the Kuahelani and Meheula intersection near the H2 freeway. Pua noted this might involve State DOT (Department of Transportation) since it's near the freeway but would follow up.

Office of the City & County of Honolulu Council District 2, Councilmember Matthew Weyer – Kelly Anaya – [2:07:06]: Kelly Anaya thanked the board for supporting the North Shore Neighborhood Board on the Mount Kaʻala resolution and reported the following:

- Announcements: Councilmember Weyer joined the special meeting with over 150 residents from Central Oʻahu and North Shore. He introduced Resolution 25234 to strengthen emergency response in coastal inundation areas by installing monitoring devices such as traffic cameras, which passed the Public Safety and Economy Committee on Thursday, August 21, 2025. He also introduced Resolution 25185 to develop a residential relocation assistance program for City-funded housing projects, which passed the Committee on Housing, Homeless, and Parks on Tuesday, August 19, 2025.
- Newsletter: https://drive.google.com/file/d/1bStQwwJP7BGZIyka_r-2drWdi4516E9H/view?usp=drive_link

Office of State Senate District 18, Senator Michelle Kidani – Trevor Nagamine – [2:10:40]: Trevor Nagamine reported the following:

- Updates: HDOT will be repaving Kamehameha Highway between Waipahu Street and Ka Uka Boulevard, with the project currently in the design phase and expected to go out to bid in February 2026. Under Senate Bill 1300 (now Act 139), students who qualify for reduced-price meals will receive free breakfast and lunch. The DOE (Department of Education) has a new partnership with the Culinary Institute of the Pacific at the Kapiʻolani Community College to provide locally grown food for school meals. On Monday, July 28, 2025, Senator Kidani attended the groundbreaking for the Wahiawā Center for Workforce Excellence, which will include administrative offices for the Leilehua-Mililani-Waialua complex area and satellite classrooms for the community college system.

Office of State Senate District 17, Senator Donovan Dela Cruz – Charles Miller – [2:13:36]: Charles Miller reported the following:

- Updates: Senator Dela Cruz attended the Straub Mililani Clinicʻs Urgent Care Expansion blessing. His staff also attended the food drive at Mililani Town Center. The H2 metal plate construction was completed on Monday, August 11, 2025.

Office of State House District 38, Representative Lauren Matsumoto – [2:14:27]: No representative present.

Office of State House District 37, Representative Trish La Chica – Tosa Lobendahn – [2:14:47]: Tosa Lobendahn shared the following:

- Updates: Representative La Chica was attending the 50 Can Education Conference in Washington, D.C. She announced a tour of the Hawaiʻi Agrivoltaic research site at Clearways Mililani Solar Farm on Wednesday, October 1, 2025 from 9:00 a.m. to 12:00 p.m., with space limited to 20 participants.
- Newsletter: https://drive.google.com/file/d/1zDLaDYEFC2n_yKj2XNOiY28Ci4JKlea3/view?usp=drive_link
- 2026 Pre-Legislative Survey: https://bit.ly/2025-leg-survey

Office of State House District 46, Representative Amy Perruso – [2:16:46]: No representative present.

IX. ANNOUNCEMENTS – [2:17:06]

Next Board Meeting: The next board meeting will be held on Wednesday, September 24, 2025, at 7:00 p.m. at Milani High School – H Building and online via WebEx.

Broadcast: Videotaping of Board meetings are scheduled to be shown on ʻŌlelo Focus 49, Every Second Thursday at 9:00 a.m., and on ʻŌlelo Views 54, Every First and Third Saturday at 9:00 a.m.

X. ADJOURNMENT – [2:17:39]: The meeting was adjourned at 9:22 p.m.

Submitted by: Rachel Cristobal, Neighborhood Assistant, NCO
Reviewed by: Lindon Valenciano, Public Relations Assistant, NCO
Finalized by: Sabrina Gustafson, Secretary, NB25

MILILANI/ WAIPIʻO/ MELEMANU NEIGHBORHOOD BOARD NO. 25

NEIGHBORHOOD COMMISSION • 925 DILLINGHAM BOULEVARD, SUITE 160 • HONOLULU, HAWAIʻI 96817
PHONE (808) 768-3710 • FAX (808) 768-3711 • WEBSITE: honolulu.gov

REGULAR MEETING AGENDA

WEDNESDAY, SEPTEMBER 24, 2025 at 7:00 P.M.
MILILANI HIGH SCHOOL – H BUILDING
95-1200 MEHEʻULA PARKWAY, MILILANI, HI 96789
AND VIRTUAL VIA WEBEX

Meeting Link: https://cchnl.webex.com/cchnl/j.php?MTID=m369359c4e541c9a75488c5659a6601ad
Meeting Number / Access Code: 2482 424 7186
Passcode: NB25 (6225 from phones and video systems)
Join by Video System: Dial 24887188225@cchnl.webex.com
Join by Phone: +1-408-418-9388 United States Toll

Google Drive: https://drive.google.com/drive/folders/1kK0RlwlrULOHw3HFRCLnoiy8MZLoYk8D?usp=drive_link

Rules for Virtual Participation and Speaking: Anyone wishing to speak is asked to raise their hand, and when recognized by the Chair, to address comments to the Chair. Speakers are encouraged to keep their comments under three (3) minutes, and those giving reports are urged to keep their reports to less than three (3) minutes. Please silence all electronic devices.

Written Testimony: All written testimony must be received in the Neighborhood Commission Office 48 hours prior to the meeting. If within 48 hours, written and/or oral testimony may be submitted directly to the board at the meeting. If submitting written testimony, please note the board and agenda item(s) your testimony concerns. Send to: Neighborhood Commission Office, 530 South King Street, Room 406, Honolulu, HI 96813. Fax: (808) 768-3711. Email: nbtestimony@honolulu.gov

I. CALL TO ORDER – Chair Danielle M. M. Bass
   A. Pledge of Allegiance, Public Notice, Roll Call/Quorum

II. MONTHLY REPORTS (Limited to three (3) minutes each)
   A. Honolulu Fire Department
   (*Monthly report; fire and emergency incident statistics for this community's jurisdiction for* Aug – Sept 2025, HFD safety tips reminders, and upcoming events)
   B. Honolulu Police Department
   (*Monthly report; crime and incident statistics for this community's jurisdiction for* Aug – Sept 2025, HPD safety tips, reminders, and upcoming events)
   C. U.S. Army – Combat Aviation Brigade, 25th Infantry Division
   (Monthly report; updates on previous and current questions / concerns, safety tips, reminders, and upcoming events)
   D. Board of Water Supply (BWS)
   (*Monthly report; water main break incidents and statistics for this community's jurisdiction for* Aug – Sept 2025; BWS tips, reminders, and upcoming events)
   E. State of Hawaiʻi School Facilities Authority (HiSFA)
   (Monthly report and status update of Mililani High School Workforce Housing project; updates on previous and current questions / concerns, reminders, and upcoming events)

III. COMMUNITY CONCERNS (Limited to three (3) minutes each)
   A. Report Of Any Events or Concerns Within the Community
   Any community member can come forward and express any comment or concern within decorum. Please, limit your comments to three (3) minutes each per issue for items not on the agenda.

IV. PRESENTATIONS (Limited to seven (7) minutes each)
   A. Mililani High School Homecoming Parade – Danielle Castro, Leilani Ward-Riehle
   B. Noise Camera Installation in Mililani at Mehe'ula Parkway & Lanikūhana Ave. Intersection – Director Ed Sniffen, Hawai'i Department of Transportation

V. APPROVAL OF MEETING MINUTES: Wednesday, August 27, 2025 Regular Meeting Minutes

VI. REPORTS OF CHAIRS AND BOARD COMMITTEES (Limited to three (3) minutes each)

A. Chair's Report
   1. Letter to F.A.A. re: Blue Hawaiian Helicopters' Min. Flight Altitude Request over Central Oʻahu
   2. Pre-Assessment Consultation Environmental Assessment - Mililani High School Teacher Workforce Housing Project
      a) Provide recommendations/feedback via email by Wednesday, October 1, 2025

B. Community Partnerships and Community Outreach – Kate Ozawa, Chair
C. Community Recognition and Service Awards – Josie Kaʻanehe, Chair
D. Community Maintenance and Walk Audit – Ken Inouye & Skyler Ross, Co- Chairs
   1. Neighborhood Board Walk Form: https://forms.gle/3YeivtfDyT6VaAi1A
E. Planning, Zoning, Sustainable Development, and Climate Resilience – Trevor Nagamine, Chair
F. Transportation & OMPO – Ed Flores, Chair
G. Military Affairs and Emergency Management – Dennis Kim, Chair
H. Health, Houselessness, and Human Services – Darsha Lee, Chair
I. Parks and Recreation – Sabrina Gustafson, Chair
J. Education – Marilyn Lee, Chair

VII. ELECTED OFFICIALS REPORTS (Limited to three (3) minutes each)

A. Office of Hawaiʻi's 1st Congressional District, Congressman Ed Case – Nestor Garcia
B. Office of Hawaiʻi State Governor Josh Green – Toni Schwartz, Governor's Representative
C. Office of the City & County of Honolulu Mayor Rick Blangiardi– Mayor's Representative
D. Office of the City & County of Honolulu Council District 8, Councilmember Val Okimoto
E. Office of the City & County of Honolulu Council District 2, Councilmember Matthew Weyer
F. Office of State Senate District 18, Senator Michelle Kidani
G. Office of State Senate District 17, Senator Donovan Dela Cruz
H. Office of State House District 38, Representative Lauren Matsumoto
I. Office of State House District 37, Representative Trish La Chica
J. Office of State House District 46, Representative Amy Perruso

VIII. ANNOUNCEMENTS

A. Next Board Meeting: The next scheduled board meeting will be held on Wednesday, October 22, 2025, at 7:00 pm. Location: Mililani High School – H Building.

B. Broadcast: Videotaping of Board meetings are scheduled to be shown on ʻŌlelo Focus 49, Every Second Thursday at 9:00 a.m., and on ʻŌlelo Views 54, Every First and Third Saturday at 9:00 a.m.

IX. ADJOURNMENT

A mailing list is maintained for interested persons and agencies to receive this board's agenda and minutes. Additions, corrections, and deletions to the mailing list may be directed to the Neighborhood Commission Office (NCO) at Kapālama Hale, 925 Dillingham Boulevard, Suite 160 Honolulu, Hawaiʻi 96817; Telephone (808) 768-3710 Fax (808) 768-3711; or call Neighborhood Assistant Rachel Cristobal at (808) 768-3708 or e-mail nco@honolulu.gov . Agendas and minutes are also available on the internet at www.honolulu.gov/nco.

All written testimony must be received in the Neighborhood Commission Office 48 hours prior to the meeting. If within 48 hours, written and/or oral testimony may be submitted directly to the board at the meeting. If submitting written testimony, please note the board and agenda item(s) your testimony concerns. Send to: Neighborhood Commission Office, 925 Dillingham Boulevard, Suite 160 Honolulu, Hawaiʻi 96817. Fax: (808) 768-3711. Email: nbtestimony@honolulu.gov.

If you need an auxiliary aid/service or other accommodation due to a disability or an interpreter for a language other than English, please call the Neighborhood Commission Office at (808) 768-3710 between 8:00 a.m. and 4:00 p.m. or send an email to nco@honolulu.gov at least three (3) business days before the scheduled meeting. It may not be possible to fulfill requests received after this date.

DRAFT REGULAR MEETING WRITTEN SUMMARY FOR VIDEO RECORD
WEDNESDAY, SEPTEMBER 24, 2025 - 7:00 P.M.
MILILANI HIGH SCHOOL – H BUILDING
95-1200 MEHEULA PKWY, MILILANI, HI 96789 AND VIA WEBEX

Video recording of this meeting can be found at:
https://www.youtube.com/watch?v=GdKJohOJ5Uw&list=PLfqRwVpRrookBIqlihQKmGtTyJzCcOQEW

Reports & other meeting materials can be found at:
https://drive.google.com/drive/folders/1kK0RlwlrULOHw3HFRCLnoiy8MZLoYk8D?usp=drive_link

I. CALL TO ORDER – [0:00:17]

Chair Danielle Bass called the Mililani/Waipiʻo/Melemanu Neighborhood Board No. 25 meeting to order at 7:03 p.m. The Board recited the Pledge of Allegiance followed by Chair Bass reciting the rules of speaking – [0:00:42]. Quorum WAS established with 16 members present – [0:03:17]. Note: This 23-member Board requires 12 members to establish a quorum and to take official Board action. Member Alexander Ozawa missed the roll call, but was present online; there were 17 members present.

Members Present: Danielle Bass, Elise Carmody, Ed Flores, Ann Freed, Sabrina Gustafson, Ken Inouye, Josie Kaʻanehe, Dennis Kim, Brandon Kinard, Marilyn Lee, Rodney Park, Rudy Rana, Skyler Ross, Martina Segura, Emil Svrcina, Sharon Williams, Alexander Ozawa, Katherine Kupukaʻa (joined at 7:07 p.m.), Trevor Nagamine (joined at 7:53 p.m.), Kurumi Kaapana-aki (joined at 7:17 p.m.), and Darsha Lee (joined at 8:10 p.m.).

Members Absent: Mary Smart and Katherine Ozawa.

Guests: Sergeant Olivia Cowart (US Army Combat Aviation Brigade, 25th Infantry Division); Kathleen Elliott (Board of Water Supply); Cheri Nakamura (Hawaiʻi School Facilities Authority); Lacey Shimabukuro, Audrey Awaya, Karen Arakawa (Pacific Housing Assistance Corporation); Alexander Relova and Captain Shaun Wray (Honolulu Fire Department); Lieutenant Romel Baysa (Honolulu Police Department); Danielle Castro (Mililani High School); Toni Schwartz (Governor Josh Green's Representative); Jocelyn Doane (Mayor Rick Blangiardi's Representative); Councilmember Val Okimoto; Kelly Anaya (Councilmember Matthew Weyer's Office); Trevor Nagamine (Senator Michelle Kidani's Office); Charles Miller (Senator Donovan Dela Cruz's Office); Representative Lauren Matsumoto; Tosa Lobendahn (Representative Trish La Chica's Office); Sierra Martin (Kealahou West Oʻahu); Mike Buck (C.O.R.E.); Darin Leong, Donna, James, John Caraang, Lei, Leilani, Shy (Guests and Residents); Rachel Cristobal (Neighborhood Commission Office). Note: Name was not included if not legible. There were approximately 59 total attendees.

II. MONTHLY REPORTS – [0:03:26]

Honolulu Fire Department – [0:03:26]: Item was discussed later in the meeting.

Honolulu Police Department – [0:03:46]: Item was discussed later in the meeting.

Member Kupuakaʻa joined at 7:07 p.m.; 18 members present.

U.S. Army – Combat Aviation Brigade, 25th Infantry Division – [0:04:05]: Sergeant Olivia Cowart reported the following:

- Job Fair: US Army Garrison Hawai'i will hold a hiring fair on Tuesday, October 14, 2025, at the O'ahu Veterans Center from 8:30 a.m. to 2:00 p.m., with on-site job offers.
- Training Advisory: Published for O'ahu on Wednesday, September 3, 2025. Artillery, mortar, and demolitions training scheduled for September 27-30, 2025, including night live fire.
- Gold Star Mothers and Family Day: Ceremony on Sunday, September 28, 2025, at the National Memorial Cemetery of the Pacific.
- Joint Pacific Multinational Readiness Center (JPMRC): Training exercise scheduled for November 7-16, 2025, with increased traffic, noise, and military aircraft activity.
- Community Concern Line: 808-787-1528 or email usag.hawaii.comrel@army.mil.

Board of Water Supply (BWS) – [0:09:15]: Kathleen Pahinui reported the following:

- Water Main Break: One 8-inch pipe break at 95-117 Waikalani Drive on Tuesday, August 26, 2025.

- Water Conservation: Requested 20% water conservation due to abnormally low rainfall (18% below normal in August 2025). Suggested turning off water while brushing teeth, collecting shower warm-up water, and avoiding lawn watering.
- Melemanu 808 Reservoir: Connection to water system improvement project scheduled for Wednesday, October 1, 2025, between 8:30 a.m. and 2:30 p.m.

Questions, Comments, & Concerns – [0:11:59]

1. Water Catchment System: Member Kim inquired about a water catchment system application that received no response. Kathleen requested for his contact info so that she could get more information.
2. Red Hill Update: Member Svrcina requested updates on Red Hill. Kathleen stated she is unable to talk to the lawsuit, but she noted that it remains ongoing with active participation in meetings, including the upcoming Fuel Tank Advisory Committee meeting on Wednesday, October 1, 2025.
3. Pressure Regulator Issue: Member Freed mentioned pressure regulators damaged during BWS operations in Waikalani and requested offline discussion to address the issue.

Member Kaapana-aki joined at 7:17 p.m.; 19 members present.

State of Hawaiʻi School Facilities Authority (HiSFA) – [0:14:36]: Cheri Nakamura reported the following:

- Mililani High School Workforce Housing: Environmental assessment underway with traffic, biological, archaeological, and cultural studies in progress.
- Project Details: Up to 100 units, resident manager's unit, code-required parking, separate entry/exit at Meheula Parkway, secured building with perimeter fence, on-site laundry, common rooms, and on-site management.
- Timeline: Draft Environmental Assessment publication expected in Q1 2026.

Questions, Comments, & Concerns – [0:18:20]

1. Entrance Proximity Concern: Member Kim expressed concern about the proximity of the project entrance to the post office driveway on Meheula Parkway, suggesting a dedicated turn lane.
2. Building Configuration: Member Kupuka'a asked about the building configuration. Lacey Shimabukuro (Pacific Housing) confirmed it would be a five-story connected structure.
3. Tenant Recruitment: Member Svrcina asked about tenant recruitment. Lacey explained the focus would be on licensed public-school teachers and education staff, with a property manager handling marketing and potentially using a lottery system if needed.
4. University of Hawai'i Graduate Housing Project Serves as Model for Mililani Partnership: Cheri noted that the University of Hawai'i had just completed a successful graduate housing project with a ground-floor pre-K facility through a public-private partnership similar to their planned Mililani project. Cheri described the project's "priority waterfall" tenancy system and highlighted how the SFA invested in eight pre-K classrooms that serve graduate students' children while providing internship opportunities for future pre-K teachers, presenting it as a successful model for their upcoming partnership.

II. MONTHLY REPORTS (CONTINUED) – [0:27:29]

Honolulu Fire Department – [0:27:29]: Firefighter Alexander Relova reported the following:

- Report: https://drive.google.com/file/d/1q3-QtM4SyXGTJFxo4JkW4BhwXo1V79GK/view?usp=drive_link
- August 2025 Statistics: 1 structure fire, 14 wildland/brush fires, 2 nuisance fires, 0 cooking fires, 6 activated alarms with no fire, 73 medical emergencies, 0 motor vehicle collisions with pedestrians, 3 motor vehicle crashes/collisions, 0 mountain rescues, 0 ocean rescues, and 3 hazardous materials incidents.
- Fire Safety Tips: Addressed the importance of lithium-ion battery safety, including proper purchasing, charging, and recycling practices. Recommended buying only UL, ETL, or CSA certified products, using manufacturer-approved chargers, charging on hard surfaces, avoiding overcharging, and recycling batteries at appropriate facilities.
- Upcoming Event: Fire Prevention Family Day on Saturday, October 4, 2025, at the Honolulu Zoo from 10:00 a.m. to 2:00 p.m.

Questions, Comments, & Concerns – [0:31:55]

1. Battery Disposal Clarification: Member Kupukaʻa asked about proper disposal of double-A batteries versus lithium-ion batteries. Captain Wray clarified that double-A batteries are fine for regular disposal, while lithium-ion batteries require proper disposal through convenience centers due to fire hazards.

Honolulu Police Department – [0:33:003]: Lieutenant Baysa reported the following:

- Crime Statistics (August 23 - September 23, 2025): 1 aggravated assault, 4 burglary cases, 0 robberies, 3 car break-ins, and 897 calls for service.

- Safety Tip: Reminded the public that using mobile devices while driving or crossing streets is illegal.

Questions, Comments, & Concerns – [0:34:26]

1. Parking Enforcement: Member Marilyn Lee raised concerns about dangerous parking around Mililani High School on Sunday mornings at Ikaloa Street and Kipapa Drive. Lieutenant Baysa promised to notify daytime watch commanders about the issue.
2. Red Light Running and Headlight Brightness: Member Kupuka'a reported vehicles running red lights at Meheula Parkway and expressed concerns about excessively bright headlights. Lieutenant Baysa explained that officers must observe violations to issue citations, and that stock headlights are legal but aftermarket modifications can be problematic.
3. Pedestrian Mobile Device Laws: Member Svrcina asked about fines for using mobile devices while crossing streets. Officers explained that initial fines are $15, with subsequent violations at $75, though judges may determine final penalties.
4. Scope of Pedestrian Distraction Law: Member Kim asked about whether the pedestrian safety law covers earphones and earbuds in addition to cell phone use while crossing streets. Lieutenant Baysa explained that earphones and earbuds are not covered by the law, noting that while wearing audio devices, pedestrians can still look forward and pay attention to traffic. However, when constantly looking down at a cell phone, peripheral vision is obstructed or essentially gone, which is what the law was specifically intended to address - the visual distraction rather than audio distractions.
5. Weekend Park Enforcement Suggestion: Chair Bass suggested increased patrol around parks on weekends to address parking violations near recreational areas.

III. COMMUNITY CONCERNS – [0:43:31]: No community concerns were presented.

IV. PRESENTATIONS – [0:44:06]

Mililani High School Homecoming Parade – [0:44:16]: Danielle Castro, Student Activities Coordinator, announced:

- Date and Time: Saturday, October 18, 2025, at 9:00 a.m.
- Route: Starting at the upper parking lot, traveling down Meheula Parkway, in front of Waena Elementary School, down Kipapa Drive, and ending at the stadium.
- Participants: Community schools, complex area schools, marching band, JROTC, and homecoming court.
- Flyer: https://drive.google.com/file/d/1xMSwdHLr2u4aLzRa5Fv4Qm-tlB3HTa_7/view?usp=drive_link

Noise Camera Installation in Mililani at Mehe'ula Parkway & Lanikūhana Ave. Intersection – [0:45:46]: Chair Bass reported that Director Ed Sniffen was unable to attend but provided the below information:

- Noise Camera Purpose: Automated microphones and cameras to detect loud vehicles exceeding 90 dB thresholds, focusing on modified exhaust or excessive engine revving.
- Legal Basis: Required by Act 63, Session Laws of Hawaii 2023, as a pilot program to address excessive traffic noise.
- Location Selection: Based on HPD complaint data and community requests. Implementation: Ten cameras will be installed on Oahu (may be relocated), with no fines or citations during the two-year pilot (data collection only).
- Current Status: Two cameras operational (H3 near Kamehameha Highway off-ramp and Ala Moana Boulevard near Kalia Road), with eight more to be installed by January 2026.
- Noise Camera: https://drive.google.com/file/d/1XsHlaPY1BrchQBIMz75nXkaT4N6EwUfY/view?usp=drive_link
- Project Updates: https://drive.google.com/file/d/1iYkqjeOex1-8kIBF_d3bqr8GcQNlgQUO/view?usp=drive_link

Member Nagamine joined at 7:53 p.m.; 20 members present.

Questions, Comments, & Concerns – [0:54:33]

1. Loud Music Detection: Member Svrcina asked if loud music would be recorded. Chair Bass confirmed that any sound reaching the 90 dB threshold would be recorded.
2. Camera Location: Member Marilyn Lee asked about the specific location. Chair Bass explained there are two proposed sites: one on Meheula Parkway and Lanikuhana Avenue near the Lutheran Church.
3. Noise Level Context: Member Freed noted that 90 dB is equivalent to a vacuum cleaner and expressed support for the cameras after years of noise concerns.
4. Project Duration and Contact: Member Ka'anehe asked about the project duration and contact information. Chair Bass confirmed it's a two-year pilot with possible camera relocation.

V. APPROVAL OF MEETING MINUTES – [0:59:37]

Member Gustafson MOVED and Chair Bass SECONDED to approve the Wednesday, August 27, 2025, Regular Meeting Minutes as distributed – [0:59:42]. Hearing no discussion. The motion was ADOPTED; 21-0-0 (Aye: Bass, Carmody, Flores, Freed, Gustafson, Inouye, Kaʻanehe, Kim, Kinard, Alexander Ozawa, Marilyn Lee, Park, Rana, Ross, Segura, Svrcina, Williams, Kupukaʻa, Nagamine, Kaapana-aki, and Darsha Lee. Nay: None. Abstain: None) – [1:00:05].

VI. REPORTS OF CHAIRS AND BOARD COMMITTEES – [1:00:17]

Chair's Report – [1:00:26]: Chair Bass reported:

- Blue Hawaiian Helicopters Flight Altitude Request: Thanked Members for supporting the letter to the FAA opposing Blue Hawaiian Helicopters' request to reduce minimum flight altitude from 1,500 ft to 700 ft above ground over Central O'ahu. The application incorrectly described the area as "generally unpopulated" despite Mililani having 55,000 residents and Central O'ahu having 85,000. The FAA received 56,000 comments by the deadline, with opposition from Senator Kidani, Congressman Case, and the Governor's office.
- Pre-Assessment Consultation Environmental Assessment: Requested Members to email questions or comments about the Mililani High School Teacher Workforce Housing Project by Wednesday, October 1, 2025, for inclusion in the board's response to PBR Hawaii.

Member Darsha Lee joined at 8:10 p.m.; 21 members present.

Questions, Comments, & Concerns – [1:08:42]

1. Mount Kaʻala Update: Member Freed asked for an updated status on the zipline. Chair Bass reported that the developer has rescinded their request for a conditional use permit modification with DPP (Department of Planning and Permitting) following opposition from approximately 6 neighborhood boards.

Community Partnerships and Community Outreach – [1:10:40]: No representative present.

Community Recognition and Service Awards – [1:10:43]: No report.

Community Maintenance and Walk Audit – [1:10:57]: Members Inouye reported:

- Follow Up on Mililani Town Center: Follow-up needed on roots protruding through pavement at the Mililani Town Center.

Planning, Zoning, Sustainable Development, and Climate Resilience – [1:11:23]: No report.

Transportation & OMPO – [1:11:36]: Member Flores reported:

- Week Without Driving Challenge: Monday, September 29, 2025 to Sunday, October 5, 2025, encouraging residents to travel without cars.
- Navahine Settlement Presentation: Lawsuit by 13 young Hawaiians against the State was settled in 2024, with provisions for achieving net negative emissions, creating greenhouse gas reduction plans, reforming budgeting processes, establishing a youth council, and expanding clean infrastructure.

Military Affairs and Emergency Management – [1:14:01]: Member Kim reported:

- Wheeler Field Helicopter Hangar Visit: Planning in progress but delayed due to upcoming international exercises. Expected in approximately two months with three weeks' advance notice.

Health, Houselessness, and Human Services – [1:15:15]: Member Darsha Lee reported:

- Recreation Center 3 Concerns: Relayed information about vandalism and encampment to Kealahou West O'ahu, who will follow up.

Parks and Recreation – [1:16:01]: Member Gustafson reported:

- Dog Park Survey: Created and distributed a survey to gather community input on the dog park issue.
- Survey Link: https://docs.google.com/forms/d/1tcimvui1BeQbGi-C4reoUDl0RXf9wsCwd3DMj7T4hwl/edit?usp=drivesdk

Education – [1:16:47]: Member Marilyn Lee reported:

- Mililani Complex PC (Professional Collaboration) Day: Principals shared their connections to the community, and Chair Bass gave a presentation on agriculture sustainability.
- Kipapa School Updates: Completed their first fundraiser and announced Kipapa Makahiki (formerly Fall Fair) on Friday, November 7, 2025, from 4:00 p.m. to 8:00 p.m., featuring crafters, food trucks, and games.

VII. ELECTED OFFICIALS REPORTS – [1:18:37]

Office of Hawaiʻi's 1st Congressional District, Congressman Ed Case - [1:18:40]: No representative present.

Office of Hawaiʻi State Governor Josh Green – [1:18:46]: Toni Schwartz reported:

- Manoa Housing Complex: Hale Haukani, a $170 million student housing complex at the University of Hawai'i - Manoa, opened Monday, August 18, 2025. The public-private partnership provides 558 beds in 2 residential towers, plus a childcare center for 130 children.
- State Job Opportunities: Monday, September 1, 2025, applicants within 3 months of obtaining their bachelor's degree can apply for state jobs, allowing college students to secure employment before graduation.

Questions, Comments, & Concerns – [1:22:58]

1. Coconut Rhinoceros Beetle: Member Svrcina asked about the Governor's awareness of the beetle infestation affecting palm trees. Toni confirmed the Governor is aware, with the Department of Agriculture focusing on containment rather than eradication, with $50 million allocated for response.
2. Western States Health Consortium: Member Marilyn Lee expressed support for joining the consortium and asked about health recommendations. Toni mentioned the Governor's recent emergency proclamation on COVID-19 vaccinations for pregnant women and continued administration of the Moderna vaccine.

Office of the City & County of Honolulu Mayor Rick Blangiardi – [1:26:12]: Jocelyn Doane reported:

- Rail Progress: HART broke ground on the third segment from Kalihi to Kakaʻako.
- HUD (Department of Housing and Urban Development) Meeting: The Region 9 Administrator met with the 4 County's Mayors about homelessness and housing programs, with productive discussions.
- Dumping at Kuahelani Park: Site visited and photos taken; awaiting response.
- Stop Sign Compliance at Mililani Town Center: HPD followed up with management, who are considering speed bumps and increased security presence.
- Sidewalk Construction on Kipapa Drive: Root pruning to be completed by Tuesday, September 30, 2025, with sidewalk work finished by mid-October 2025.
- Mililani District Park Safety Issues: Hole filled on Wednesday, September 10, 2025; metal support removed; replacement slide parts on backorder; irrigation system work order submitted.
- Kamaio Park Construction: Awaiting information from other agencies.
- Condo Pipe Replacement: DPP (Department of Planning and Permitting) software update causing permit backlog; offered to follow up on specific permit.
- Newsletter: https://drive.google.com/file/d/1Ee080hzV5Mll95MobtRxkHdadXYQj4Q_/view?usp=drive_link

Questions, Comments, & Concerns – [1:31:38]

1. Rail Timeline: Member Svrcina asked if the rail would open to the airport next month despite the Hitachi lawsuit. Jocelyn confirmed it was still on schedule but would verify and follow up.

Office of the City & County of Honolulu Council District 8, Councilmember Val Okimoto – [1:33:07]: Councilmember Val Okimoto reported:

- Mililani High School Softball Team Recognition: Honored the team at Honolulu Hale for their second consecutive state championship.
- Legislative Updates: Bills 49 and 50 (2025) were adopted, raising homeowner exemptions for seniors (from $160,000 to $180,000) and base exemptions (from $120,000 to $140,000), effective Thursday, July 1, 2027. Bill 34 adjusting assessed value thresholds for residential properties passed committee.
- Mililani District Park Concerns: Work order submitted for irrigation repairs; slide replacement pending equipment delivery; hole addressed and no longer a safety issue.
- Youth Commission: Appointed Mililani High School senior Aviana Moore to represent District 8.
- Newsletter: https://drive.google.com/file/d/1XY3MWerENlUN8qTt2lxX5J6qS_e3yfNW/view?usp=drive_link

Questions, Comments, & Concerns – [1:40:10]

1. Bill 60 Inquiry: Member Kupuka'a asked about Bill 60. Councilmember Okimoto explained it relates to studying rail extension to Manoa, with a CD1 version adopted pending HART board input.

Office of the City & County of Honolulu Council District 2, Councilmember Matt Weyer – [1:42:17]: Kelly Anaya reported:

- Mobile District Office: Next event on Friday October 3, 2025, from 10:00 a.m. to 12:00 p.m. at Wahiawā District Park.
- Property Tax Deadlines: Homeowner's exemption deadline is Tuesday, September 30, 2025. Real property tax credit available for households making $80,000 or less.

- Mount Kaʻala Site Visit: Councilmember Weyer joined representatives from DLNR (Department of Land and Natural Resources) , US Air Force, and community groups to view conservation work. DPP confirmed receipt of the developer's withdrawal letter but also received a new application for minor modification.
- HPD Traffic Awareness Campaign: Supporting "Safer Roads Together" campaign across Districts 2, 3, and 4.
- Blue Hawaiian Helicopters: Submitted testimony opposing the minimum flight altitude reduction.

Office of State Senate District 18, Senator Michelle Kidani – [1:47:05]: Trevor Nagamine reported:

- Blue Hawaiian Helicopters: Senator Kidani submitted comments opposing the altitude reduction proposal.
- School Lunch Menu Revitalization: DOE (Department of Education) introducing locally grown and produced foods, including yogurt bowl, ulu banana bread, Korean beef bowls with local ground beef, hamburger curry with local ulu and taro, and scratch-made chicken adobo.
- Kamehameha Highway Repaving: Project from Waipahu Street to Ka Uka Boulevard in design phase, scheduled for bid in February 2026 with construction later that year.

Office of State Senate District 17, Senator Donovan Dela Cruz – [1:49:06]: Charles Miller reported:

- Mililani Middle School Parking Lot: Update on the memorandum of understanding between the DOE and the City and County regarding the new Milani Middle School parking lot. The MOA (Memorandum of Agreement) is currently with the city directors, who are consulting with their corporation counsel for review.
- Homecoming Attendance: Senator plans to attend the Mililani homecoming parade and game.

Office of State House District 38, Representative Lauren Matsumoto – [1:50:17]: Representative Lauren Matsumoto reported:

- Community Events: Attended the Straub Clinic opening, HPD safe driving campaign at Uka and Mauka, and celebrated the summer reading grand prize winner from Mililani.
- Capital Talking Tour: Scheduled for Thursday, October 9, 2025, from 10:00 a.m. to 12:00 p.m. at the State Capitol during fall break.
- Pre-Session Survey: District 38 survey being distributed to shape the 2026 legislative package.
- Listening Tour Results: Cost of living, crime/public safety, and government transparency were the top three issues across all five locations visited.

Office of State House District 37, Representative Trish La Chica – [1:55:15]: Tosa Lobendahn reported:

- Legislative Survey: August-September newsletter and survey available online.
- Agrivoltaic Site Tour: Community tour scheduled for October 1, 2025, from 9:00 a.m. to 12:00 p.m., with limited spots available.
- Fully Rooted Festival: 5 events celebrating Filipino American History Month during the month of October 2025, including a free concert with Ruby Ibarra on Saturday, October 25, 2025.
- Newsletter: https://drive.google.com/file/d/14tpRTi5R9_3ErsuhWRbGSTdyw6KQ1hFR/view?usp=drive_link

Office of State House District 46, Representative Amy Perruso – [1:57:47]: No representative present.

- Newsletter: https://drive.google.com/file/d/1ajW-Y1lDVg6s3CBE8wwNyOM0twYLB5kk/view?usp=drive_link

ANNOUNCEMENTS – [1:57:58]

Next Board Meeting: Wednesday, October 22, 2025, at 7:00 p.m. at Mililani High School – H Building.

Broadcast: Videotaping of Board meetings are scheduled to be shown on ʻŌlelo Focus 49, Every Second Thursday at 9:00 a.m., and on ʻŌlelo Views 54, Every First and Third Saturday at 9:00 a.m.

ADJOURNMENT – [1:58:16]: The meeting was adjourned at 9:01 p.m.

Submitted by: Rachel Cristobal, Neighborhood Assistant, NCO
Reviewed by: Dylan Buck, CRS, NCO
Finalized by: Sabrina Gustafson, Secretary, NB25

MILILANI/ WAIPIʻO/ MELEMANU NEIGHBORHOOD BOARD NO. 25

NEIGHBORHOOD COMMISSION • 925 DILLINGHAM BOULEVARD, SUITE 160 • HONOLULU, HAWAIʻI 96817
PHONE (808) 768-3710 • FAX (808) 768-3711 •E-MAIL: nco@honolulu.gov • WEBSITE: www.honolulu.gov/nco

REGULAR MEETING AGENDA
WEDNESDAY, NOVEMBER 19, 2025 at 7:00 P.M.
MILILANI HIGH SCHOOL – H BUILDING
95-1200 MEHEʻULA PARKWAY, MILILANI, HI 96789
AND VIRTUAL VIA WEBEX

Meeting Link: https://cchnl.webex.com/cchnl/j.php?MTID=m48d17bf859664cf2e39542d5d99bc066
Meeting Number / Access Code: 2485 390 3180
Passcode: NB25 (6225 from phones and video systems)
Join by Phone: +1-408-418-9388 United States Toll

Google Drive: https://drive.google.com/drive/folders/1kK0RlwlrULOHw3HFRCLnoiy8MZLoYk8D?usp=drive_link
Recordings of Board meetings can be found at: https://www.youtube.com/@NeighborhoodCommissionOffice

Rules for Virtual Participation and Speaking: Anyone wishing to speak is asked to raise their hand, and when recognized by the Chair, to address comments to the Chair. Speakers are encouraged to keep their comments under three (3) minutes, and those giving reports are urged to keep their reports to less than three (3) minutes. Please silence all electronic devices.

Written Testimony: All written testimony must be received in the Neighborhood Commission Office 48 hours prior to the meeting. If within 48 hours, written and/or oral testimony may be submitted directly to the board at the meeting. If submitting written testimony, please note the board and agenda item(s) your testimony concerns. Send to: Neighborhood Commission Office, 530 South King Street, Room 406, Honolulu, HI 96813. Fax: (808) 768-3711. Email: nbtestimony@honolulu.gov

I. CALL TO ORDER – Chair Danielle M. M. Bass
   A. Pledge of Allegiance, Public Notice, Roll Call/Quorum

II. MONTHLY REPORTS (Limited to three (3) minutes each)
   A. Honolulu Fire Department
   (*Monthly report; fire and emergency incident statistics for this community's jurisdiction for* Oct – Nov 2025, HFD safety tips reminders, and upcoming events)
   B. Honolulu Police Department
   (Monthly report; crime and incident sta*tistics for this community's jurisdiction for* Oct – Nov 2025, HPD safety tips, reminders, and upcoming events)
   C. U.S. Army – Combat Aviation Brigade, 25th Infantry Division
   (Monthly report; updates on previous and current questions / concerns, safety tips, reminders, and upcoming events)
   D. Board of Water Supply (BWS)
   (*Monthly report; water main break incidents and statistics for this community's jurisdiction for* Oct – Nov 2025; BWS tips, reminders, and upcoming events)

III. APPROVAL OF MEETING MINUTES: Wednesday, October 22, 2025 Regular Meeting Minutes

IV. COMMUNITY CONCERNS (Limited to three (3) minutes each)
   A. Report Of Any Events or Concerns Within the Community
   Any community member can come forward and express any comment or concern within decorum. Please, limit your comments to three (3) minutes each per issue for items not on the agenda.

V. PRESENTATIONS (Limited to ten (10) minutes)
   A. Update on New Location of Proposed Teacher Workforce Housing Project at Mililani High School Lower Campus (Between Mehe'ula Pkwy/Anania Dr. and MHS Football Stadium) – State of Hawaiʻi School Facilities Authority (HiSFA) & Pacific Housing Assistance Corporation
   (Limited to five (5) minutes)
   B. **Final Presentation & Discussion on Additional "Dog Friendly" Parks in Mililani** – Sabrina Gustafson, Parks & Recreation Committee Chair
      1. Mililani Neighborhood Board**'s** Community Survey on Establishing a Dog-Friendly Park: https://docs.google.com/forms/d/e/1FAIpQLSddJXC7Ec7rDOB-AoJJhnBOkE6lYdMG5TObjwLSPLC6aZsHTA/viewform

VI. BOARD BUSINESS
   A. Motion for consideration: The Mililani-**Waipiʻo**-Melemanu Neighborhood Board #25 recommends that the City Department of Parks & Recreation establish at least one on-leash dog-friendly park in Mililani Town.

VII. REPORTS OF CHAIRS AND BOARD COMMITTEES (Limited to three (3) minutes each)

A. Chair's Report
B. Community Partnerships and Community Outreach – Kate Ozawa, Chair
C. Community Recognition and Service Awards – Josie Kaʻanehe, Chair
D. Community Maintenance and Walk Audit – Ken Inouye & Skyler Ross, Co- Chairs
    1. Neighborhood Board Walk Form: https://forms.gle/3YeivtfDyT6VaAi1A
E. Planning, Zoning, Sustainable Development, and Climate Resilience – Trevor Nagamine, Chair
F. Transportation & OMPO – Ed Flores, Chair
G. Military Affairs and Emergency Management – Dennis Kim, Chair
H. Health, Houselessness, and Human Services – Darsha Lee, Chair
I. Parks and Recreation – Sabrina Gustafson, Chair
J. Education – Marilyn Lee, Chair

VIII. ELECTED OFFICIALS REPORTS (Limited to three (3) minutes each)

A. Office of Hawaiʻi's 1st Congressional District, Congressman Ed Case – Nestor Garcia
B. Office of Hawai'i State Governor Josh Green – Toni Schwartz, Governor's Representative
C. Office of the City & County of Honolulu Mayor Rick Blangiardi– Jocelyn Doane, Mayor's Representative
D. Office of the City & County of Honolulu Council District 8, Councilmember Val Okimoto
E. Office of the City & County of Honolulu Council District 2, Councilmember Matthew Weyer
F. Office of State Senate District 18, Senator Michelle Kidani
G. Office of State Senate District 17, Senator Donovan Dela Cruz
H. Office of State House District 38, Representative Lauren Matsumoto
I. Office of State House District 37, Representative Trish La Chica
J. Office of State House District 46, Representative Amy Perruso

IX. ANNOUNCEMENTS

A. NCO and Toys for Tots – Toy Drive: Your Neighborhood Assistant will be collecting donated children's toys (new and unwrapped) at tonight's meeting on Wednesday, November 19, 2025. If you'd like to donate, please bring your toy(s) to this meeting.
B. Next Board Meeting: This Board will RECESS their December 2025 regular meeting.

HAPPY HOLIDAYS & HAPPY NEW YEAR!

The next scheduled board meeting will be held on Wednesday, January 28, 2026, at 7:00 pm.
Location: Mililani High School – H Building.

C. Broadcast: Videotaping of Board meetings are scheduled to be shown on ʻŌlelo Focus 49, Every Second Thursday at 9:00 a.m., and on ʻŌlelo Views 54, Every First and Third Saturday at 9:00 a.m.

X. ADJOURNMENT

A mailing list is maintained for interested persons and agencies to receive this board's agenda and minutes. Additions, corrections, and deletions to the mailing list may be directed to the Neighborhood Commission Office (NCO) at Kapālama Hale, 925 Dillingham Boulevard, Suite 160 Honolulu, Hawaiʻi 96817; Telephone (808) 768-3710 Fax (808) 768-3711; or call Neighborhood Assistant Rachel Cristobal at (808) 768-3708 or e-mail nco@honolulu.gov . Agendas and minutes are also available on the internet at www.honolulu.gov/nco.

All written testimony must be received in the Neighborhood Commission Office 48 hours prior to the meeting. If within 48 h'ours, written and/or oral testimony may be submitted directly to the board at the meeting. If submitting written testimony, please note the board and agenda item(s) your testimony concerns. Send to: Neighborhood Commission Office, 925 Dillingham Boulevard, Suite 160 Honolulu, Hawaiʻi 96817. Fax: (808) 768-3711. Email: nbtestimony@honolulu.gov.

If you need an auxiliary aid/service or other accommodation due to a disability or an interpreter for a language other than English, please call the Neighborhood Commission Office at (808) 768-3710 between 8:00 a.m. and 4:00 p.m. or send an email to nco@honolulu.gov at least three (3) business days before the scheduled meeting. It may not be possible to fulfill requests received after this date.

MILILANI/ WAIPIʻO/ MELEMANU NEIGHBORHOOD BOARD NO. 25

NEIGHBORHOOD COMMISSION • 925 DILLINGHAM BOULEVARD, SUITE 160 • HONOLULU, HAWAIʻI 96817
PHONE (808) 768-3710 • FAX (808) 768-3711 • WEBSITE: honolulu.gov

REGULAR MEETING AGENDA

WEDNESDAY, JANUARY 28, 2026 at 7:00 P.M.
MILILANI HIGH SCHOOL – H BUILDING
95-1200 MEHEʻULA PARKWAY, MILILANI, HI 96789
AND VIRTUAL VIA WEBEX

Meeting Link: https://cchnl.webex.com/cchnl/j.php?MTID=m369359c4e541c9a75488c5659a6601ad
Meeting Number / Access Code: 2482 424 7186
Passcode: NB25 (6225 from phones and video systems)
Join by Video System: Dial 24887188225@cchnl.webex.com
Join by Phone: +1-408-418-9388 United States Toll

Google Drive: https://drive.google.com/drive/folders/1kK0RlwlrULOHw3HFRCLnoiy8MZLoYk8D?usp=drive_link

Rules for Virtual Participation and Speaking: Anyone wishing to speak is asked to raise their hand, and when recognized by the Chair, to address comments to the Chair. Speakers are encouraged to keep their comments under three (3) minutes, and those giving reports are urged to keep their reports to less than three (3) minutes. Please silence all electronic devices.

Written Testimony: All written testimony must be received in the Neighborhood Commission Office 48 hours prior to the meeting. If within 48 hours, written and/or oral testimony may be submitted directly to the board at the meeting. If submitting written testimony, please note the board and agenda item(s) your testimony concerns. Send to: Neighborhood Commission Office, 530 South King Street, Room 406, Honolulu, HI 96813. Fax: (808) 768-3711. Email: nbtestimony@honolulu.gov

I. CALL TO ORDER – Chair Danielle M. M. Bass
- **A.** Pledge of Allegiance, Public Notice, Roll Call/Quorum

II. MONTHLY REPORTS (Limited to three (3) minutes each)
- **A. Honolulu Fire Department**
  (*Monthly report; fire and emergency incident statistics for this community's jurisdiction for Dec 2025 – Jan 2026, HFD safety tips reminders, and upcoming events*)
- **B. Honolulu Police Department**
  (*Monthly report; crime and incident statistics for this community's jurisdiction for Dec 2025 – Jan 2026, HPD safety tips, reminders, and upcoming events*)
- **C. U.S. Army – Combat Aviation Brigade, 25th Infantry Division**
  (*Monthly report; updates on previous and current questions / concerns, safety tips, reminders, and upcoming events*)
- **D. Board of Water Supply (BWS)**
  (*Monthly report; water main break incidents and statistics for this community's jurisdiction for Dec 2025 – Jan 2026; BWS tips, reminders, and upcoming events*)
- **E. State of Hawaiʻi School Facilities Authority (HiSFA)**
  (*Monthly report and status update of Mililani High School Workforce Housing project; updates on previous and current questions / concerns, reminders, and upcoming events*)

III. APPROVAL OF MEETING MINUTES: Wednesday, November 19, 2025 Regular Meeting Minutes

IV. COMMUNITY CONCERNS (Limited to three (3) minutes each)
- **A.** Report Of Any Events or Concerns Within the Community
  Any community member can come forward and express any comment or concern within decorum. Please, limit your comments to three (3) minutes each per issue for items not on the agenda.

V. PRESENTATIONS (Limited to seven (7) minutes)
- **A. Mililani YMCA 5K Fun Run–** Maisha Abbott, Mililani YMCA
- **B. G.R.O.W. Pilot Program –** Henry Gabriel, the Recycling Program Branch, Department of Environmental Services, City & County of Honolulu

VI. REPORTS OF CHAIRS AND BOARD COMMITTEES (Limited to three (3) minutes each)
- **A.** Chair's Report
- **B.** Community Partnerships and Community Outreach – Kate Ozawa, Chair
- **C.** Community Recognition and Service Awards – Josie Kaʻanehe, Chair
- **D.** Community Maintenance and Walk Audit – Ken Inouye & Skyler Ross, Co- Chairs
  1. Neighborhood Board Walk Form: https://forms.gle/3YeivtfDyT6VaAi1A
- **E.** Planning, Zoning, Sustainable Development, and Climate Resilience – Trevor Nagamine, Chair

F. Transportation & OMPO – Ed Flores, Chair
G. Military Affairs and Emergency Management – Dennis Kim, Chair
H. Health, Houselessness, and Human Services – Darsha Lee, Chair
I. Parks and Recreation – Sabrina Gustafson, Chair
J. Education – Marilyn Lee, Chair

VII. ELECTED OFFICIALS REPORTS

(Limited to three (3) minutes each)

A. Office of Hawaiʻi's 1st Congressional District, Congressman Ed Case – Nestor Garcia
B. Office of Hawaiʻi State Governor Josh Green – Toni Schwartz, Governor's Representative
C. Office of the City & County of Honolulu Mayor Rick Blangiardi– Jocelyn Doane, Mayor's Representative
D. Office of the City & County of Honolulu Council District 8, Councilmember Val Okimoto
E. Office of the City & County of Honolulu Council District 2, Councilmember Matthew Weyer
F. Office of State Senate District 18, Senator Michelle Kidani
G. Office of State Senate District 17, Senator Donovan Dela Cruz
H. Office of State House District 38, Representative Lauren Matsumoto
I. Office of State House District 37, Representative Trish La Chica
J. Office of State House District 46, Representative Amy Perruso

VIII. ANNOUNCEMENTS

A. Next Board Meeting:

The next scheduled board meeting will be held on **Wednesday, February 25, 2026, at 7:00 pm**.
Location: Mililani High School – H Building.

B. Broadcast: Videotaping of Board meetings are scheduled to be shown on ʻŌlelo Focus 49, Every Second Thursday at 9:00 a.m., and on ʻŌlelo Views 54, Every First and Third Saturday at 9:00 a.m.

IX. ADJOURNMENT

A mailing list is maintained for interested persons and agencies to receive this Board's agenda and minutes. Additions, corrections, and deletions to the mailing list may be directed to the Neighborhood Commission Office (NCO) at Kapālama Hale, 925 Dillingham Boulevard, Suite 160, Honolulu, Hawaiʻi 96817; Telephone (808) 768-3710 Fax (808) 768-3711; or Email nco@honolulu.gov. Agendas and minutes are also available on the internet at www.honolulu.gov/nco

If you need an auxiliary aid/service or other accommodation due to a disability or an interpreter for a language other than English, please call the Neighborhood Commission Office at (808) 768-3710 between 8:00 a.m. and 4:00 p.m. or send an email to nco@honolulu.gov as soon as possible, preferably at least three (3) business days before the scheduled meeting. If a request is received with fewer than three (3) business days remaining before the meeting, we will try to obtain the auxiliary aid/service or accommodation, but it may not be possible to fulfill requests received after this date.

All written testimony must be received in the Neighborhood Commission Office 48 hours prior to the meeting. If within 48 hours, written and/or oral testimony may be submitted directly to the Board at the meeting. If submitting written testimony, please note the Board and agenda item(s) your testimony concerns. Send to: Neighborhood Commission Office, 925 Dillingham Boulevard, Suite 160 Honolulu, Hawaiʻi 96817. Fax: (808) 768-3711. Email: nbtestimony@honolulu.gov

MILILANI - WAIPIʻO - MELEMANU NEIGHBORHOOD BOARD NO. 25

NEIGHBORHOOD COMMISSION | 925 DILLINGHAM BOULEVARD SUITE 160 | HONOLULU, HAWAIʻI, 96817
PHONE (808) 768-3710 | FAX (808) 768-3711 | WEBSITE: http://www.honolulu.gov/nco

REGULAR MEETING WRITTEN SUMMARY FOR VIDEO RECORD
WEDNESDAY, JANUARY 28, 2026 - 7:00 P.M.
MILILANI HIGH SCHOOL - H BUILDING
95-1200 MEHEULA PKWY, MILILANI, HI 96789 AND VIA WEBEX

Video recording of this meeting can be found at: https://www.youtube.com/watch?v=vtWU6B9Bs_o

Reports & other meeting materials can be found at:
https://drive.google.com/drive/folders/1kK0RlwlrULOHw3HFRCLnoiy8MZLoYk8D?usp=drive_link

I. CALL TO ORDER - [0:00:07]

Chair Danielle Bass called the Mililani/Waipiʻo/Melemanu Neighborhood Board No. 25 meeting to order at 7:00 p.m. The Board recited the Pledge of Allegiance followed by Chair Bass reciting the rules of speaking - [0:00:29]. **Quorum WAS established with 21 members present during the roll call** - [0:03:32]. Note: This 23-member Board requires 12 members to establish a quorum and to take official Board action.

Members Present: Danielle Bass, Elise Carmody, Ed Flores, Ann Freed, Sabrina Gustafson, Ken Inouye, Josie Kaʻanehe, Brandon Kinard, Darsha Lee, Marilyn Lee, Alexander Ozawa, Katherine Ozawa, Rodney Park, Skyler Ross, Martina Segura, Mary Smart, Emil Svrcina, Kurumi Kaapana-aki, Trevor Nagamine, Rudy Rana, Sharon Williams, Dennis Kim (joined at 8:00 p.m.), and Katherine Kupukaʻa (joined at 8:00 p.m.).

Members Absent: None.

Guests: Lieutenant Baysa (Honolulu Police Department); Captain Katie Kolb (U.S. Army); Kathleen Pahinui (Board of Water Supply); Cheri Nakamura (State of Hawaiʻi School Facilities Authority); Lacey Shimabukuro, Vincent Shigekuni (Pacific Housing Assistance Corporation); Maisha Abbott (Mililani YMCA); Henry Gabriel, Ian Koki, Amber Urabia, Lyndsi Kumashiro (Department of Environmental Services); Jocelyn Doane (Mayor Blangiardi's Office); Kelly Anaya (Councilmember Weyer's Office); Toni Schwartz (Governor Green's Office); Aaron Wilson (Councilmember Okimoto's Office); Charles Miller (Senator Dela Cruz's Office); Representative Matsumoto; Representative La Chica, Alani Santana, Tiara Tenorio (Representative La Chica's Office); Representative Perruso, Yvonne Yoro, Zaz (Representative Perruso's Office); Ross Reyes, Blane Yoshimura (Hawaiian Earth); Walton A., Sharon Claproth, Nathan Hokama, Donna, G Nakai, Derek Lock, Rhonda (Residents & Guests); Rachel Cristobal (Neighborhood Commission Office). **There were approximately 65 total attendees.**

II. MONTHLY REPORTS - [0:03:40]

Honolulu Fire Department – [0:03:40]: No representative present.
The firefighter reported the following:

- Report: https://drive.google.com/file/d/1fYv9hOmbeA6P3mxGUT-byhbpp8XjfXFt/view?usp=drive_link

Honolulu Police Department – [0:03:47]: Lieutenant Baysa reported the following:

- December 25, 2025 – January 25, 2026 Statistics for Lower Mililani: 1 assault case, 2 burglary cases (house break-ins), 1 robbery case, 4 car break-ins (UEMVs), and 843 calls for service.
- December 25, 2025 – January 25, 2026 District-Wide Enforcement Statistics: 210 parking citations, 926 traffic infractions, 140 traffic crimes, 80 criminal citations, 70 arrests with 111 charges.
- Safety Tip: Pedestrian Safety - See and Be Seen. Make eye contact with drivers before crossing the street. As of Tuesday, January 27, 2026, there have been 5 fatalities island-wide and out of the 3 had involved pedestrians this year, with none in the district.

Questions, Comments, & Concerns - [0:05:14]

1. Crosswalk Fine Inquiry: Member Svrcina inquired about the fine for crossing while looking at a phone. Lieutenant Baysa responded that he was unsure of the exact fine amount for this fairly new law but would check and report back.
2. Drone Usage for Fireworks Enforcement: Member Ross asked about drone usage on Wednesday, December 31, 2025. Lieutenant Baysa explained drones were used mostly by the Department of Law Enforcement (State) and some by HPD for fires, special events, marathons, and Fourth of July. He did not have specific enforcement statistics.

3. Fireworks Enforcement Resources Needed: Member Freed asked what resources HPD would need for more comprehensive fireworks enforcement. Lieutenant Baysa responded that enforcement falls under multiple jurisdictions. Lieutenant Baysa shared that HPD staff the beats and to assist with traffic on New Year's Eve, but mentioned that fireworks was not the only concern. He noted that two arrests were made island-wide. Member Freed requested leadership to provide recommendations on resources needed.
4. ICE Cooperation Inquiry: Member Smart asked if HPD is allowed to cooperate with ICE and if there has been any anti-ICE activity. Lieutenant Baysa responded that there were no problems. HPD is not prohibited from cooperating, but ICE has not asked for cooperation in their district.
5. Speeding Enforcement Request: Chair Bass reported a request received from a resident to report that near Mililani Walmart area about speeding concerns. Lieutenant Baysa confirmed traffic enforcement units will direct enforcement to that area.
6. Illegal Left Turn Enforcement: Chair Bass shared social media concerns about left turns outside Mililani Town Center next to Assaggio's during no-left-turn times. She requested increased enforcement.
7. Bridge Fire Concern: Member Ka'apana-Aki expressed concern when exiting Mililani High School's gym, there's an intersection (Mehula Parkway/Anania Drive) with a bridge with individuals underneath making fires at night. Lieutenant Baysa confirmed officers will make checks.

U.S. Army - Combat Aviation Brigade, 25th Infantry Division - [0:15:06]: Captain Katie Kolb reported the following:

- Upcoming Job Fair: US Army Garrison is hosting a job fair on Monday, February 9, 2026 at Helemono Military Reservation's training room, 8:30 a.m. to 2:00 p.m., open to the public with job offers and provisional hiring.
- January 2026 Training Advisory: Most of the January 2026 training concluded. Ranger and jungle tactics using small arms blank fires in the east range started and will continue through Saturday, January 31, 2026. February 2026's training schedule will be published soon.
- Prescribed Burns: Scheduled for April 13-19, 2026 at Schofield Barracks training range complex. Prescribed burning manages wildfire spread and protects endangered plants and animals. Army received approval from Hawai'i State Department of Health's Clean Air Branch. Operations occur during daylight hours with wildland firefighters monitoring nightly.
- Community Concern Line New Number: 808-787-1528.

Questions, Comments, & Concerns - [0:19:26]

1. Vehicle Registration and Safety Checks: Member Ka'anehe reported observing over 30 vehicles with out-of-state plates without Hawai'i permits or safety checks entering between Wheeler and Schofield. Some expired beyond the 30-day grace period. Captain Kolb mentioned to her knowledge that she does not believe that the gates are checking for this but personnel have 30 days from vehicle arrival to complete registration. She will elevate the concern.
2. Job Fair's Resume Requirement: Member Rana asked if the job fair is requiring a 2 page resume compared to USA jobs. Captain Kolb shared that the announcement only mentions bringing a resume, but she can get a follow up.

Board of Water Supply (BWS) - [0:22:40]: Kathleen Panihui reported the following:

- New Partnership with Department of Environmental Services: BWS partnered with Department of Environmental Services on rebate programs. Customers purchasing new toilets will receive up to $200 in rebates.
    - Rebate Flyer: https://drive.google.com/file/d/1ZNCFu1lwFafuK4VHNutiZdpM5zCNk21m/view?usp=drive_link
- No water main breaks.
- In response to Member Kate Ozawa's inquiry: Townhome owners with individual water accounts may pay their bills online exclusively through the BWS website. Third-party payment services, including PayPal and Venmo, are not available as payment options. Due to technical issues on the BWS website during the previous week, some customers may have encountered problems when attempting to process online payments.

Questions, Comments, & Concerns - [0:24:21]

1. Smart Water Monitoring: Member Ross inquired about the smart water monitor's capabilities, specifically whether it tracks only leaks or can also monitor sprinklers and other devices. He also asked if there were available rebates. Kathleen explained that the device, which installs on the home's water pipe, is designed for leak detection only. No rebates are currently offered for the smart monitor.
2. Water Quality Report: Member Marilyn Lee wanted to confirm if the water in her area lives up to standards to the State and Federal Government. Kathleen confirmed that they're meeting all State and Federal standards for the water quality.

State of Hawaiʻi School Facilities Authority (HiSFA) - [0:26:57]: Cheri Nakamura provided updates on the Mililani High School Teacher Workforce Housing Project:

- Environmental Assessment (EA) Publication: Draft EA published in Environmental Notice on Friday, January 23, 2026. Electronic copies available on the State's environmental review programs website and SFA website. Hard copies at Mililani Public Library and Hawaiʻi State Library.
- Public Comment Period: Open until Monday, February 23, 2026. Comments may be emailed to sysadmin@pbrhawaii.com. Final EA will be published after public comments are reviewed.
- Traffic Concerns: Transportation Impact Assessment Report (TIAR), prepared by professional transportation engineers and included as EA appendix, recommends stop sign controlled access at project driveway. The project does not generate enough traffic to warrant a traffic signal.
- Explanation of the Pre-Assessment Letter from NB25: The board's consolidated feedback was formally captured in the consultant's documentation and subsequently addressed in the draft Environmental Assessment, showing that stakeholder input was integrated into the process from the early stages.

Questions, Comments, & Concerns - [0:31:06]

1. School Closures and Alternative Locations: Member Smart asked about using one of the over 40 schools reportedly being closed for this housing instead. Cheri Nakamura responded that school closures are not under SFA jurisdiction and they have no current plans for other locations.
2. Traffic Signal Justification: Member Kaʻapana-Aki questioned why a stop sign was recommended instead of a traffic signal, noting the curb cut is across from the church and there's provision for a left turn lane. Lacey Shimabukuro explained the access is off Meheula Parkway between US Postal Service and Anania Drive using an existing curb cut. TIAR recommended left and right turns exiting with one lane in and one lane exiting.
3. Left Turn Lane Traffic Count: Member Gustafson requested traffic count for vehicles making U-turns at the intersection to assess if a traffic signal is warranted. Lacey Shimabukuro responded that TIAR had traffic counts at five intersections along Meheula Parkway as requested by State DOT and City DTS, but no specific count at the U-turn area.
4. Parking and Project Feasibility: Member Gustafson raised concerns about EA not addressing parking for 280 possible residents in the surrounding community. She also questioned why the site was deemed economically unfeasible previously but is now feasible. Cheri Nakamura explained they moved the location based on community input and received $2 million additional appropriation from legislature for pre-development costs.
5. Mililani Master Plan Accuracy: Member Gustafson noted that the EA on page 136, which previously concluded that the preferred site was economically unfeasible. The question centers on why this determination have changed, given that the current assessment now indicates that constructing the facility at the same location is feasible, despite the earlier economic feasibility assessment. Cheri explained that community input received last year prompted a relocation from the first site to the second site, and additional legislative appropriation was secured to assist with predevelopment costs. These changes in circumstances, combined with efforts to address community concerns about the numerous issues associated with the first location, led to the shift to the second site, which appears to be more acceptable to local stakeholders.
6. Funding Discrepancy: Member Gustafson raised concerns about the project, noting that only $2 million has been appropriated despite an $80 million estimated cost, with confusion over whether $5 million was allocated for the sewer connection alone. Additionally, Member Gustafson flagged that Section 1.3 of the Environmental Assessment misleadingly references seven Mililani Town Association recreational centers that the new complex will not have access to, and requested a correction be made in the document.
7. Project Completion Timeline: Member Freed asked when the project will be ready for occupancy. Response: Construction expected to be completed in 2029.
8. Traffic Study Request for U-Turn Lane: Community member Rhonda requested additional traffic study to include potential vehicles making U-turns at the left turn lane to access the USPS office. Vincent Shigekuni responded they will provide a written response by early next week.

Members Kim and Kupuka'a joined at 8:00 p.m.; 23 members present.

III. APPROVAL OF MEETING MINUTES - [1:00:47]

Wednesday, November 19, 2025 Regular Meeting Minutes - [1:00:47]: **Member Gustafson MOVED and Member Ross SECONDED to approve the Wednesday, November 19, 2025 minutes as written** [1:01:04]. There were no discussions or amendments. **The motion was ADOPTED; 23-0-0** (**Aye**: Bass, Carmody, Flores, Freed, Gustafson, Inouye, Kaʻanehe, Kinard, Kim, Darsha Lee, Marilyn Lee, Alexander Ozawa, Katherine Ozawa, Park, Ross, Segura, Smart, Svrcina, Kaapana-aki, Kupukaʻa, Nagamine, Rana, and Williams. **Nay**: None. **Abstain**: None.) [1:01:25].

IV. COMMUNITY CONCERNS - [1:01:30]: There were no concerns.

V. PRESENTATIONS - [1:01:51]

Mililani YMCA 5K Fun Run – Maisha Abbott, Mililani YMCA - [1:01:55]: Maisha Abbott presented the annual Mililani YMCA 5K Fun Run scheduled for Saturday, April 18, 2026. Check-in is at 6:00 a.m. and the run starts at 7:15 a.m. It is a family event open to all.

G.R.O.W. Pilot Program – Henry Gabriel, Department of Environmental Services - [1:02:56]: Henry Gabriel from the Department of Environmental Services announced that starting Wednesday, April 1, 2026, Mililani residents can add food scraps to their green composting carts as part of the GROW pilot program. Acceptable items include fruits, vegetables, dairy, meat, seafood, breads, and leftovers. Excluded items include plastic bags, pet waste, diapers, styrofoam, and liquids. To reduce odor and pests, residents should layer food waste with green waste or freeze scraps before disposal. The program will expand island-wide after six months.

- Presentation: https://drive.google.com/file/d/1wi9AOhUGEB_1GyC0_gKOAtAeKJxhrgxW/view?usp=drive_link
- Hawaiian Earth: https://drive.google.com/file/d/1c_8G0ySzXgQvRJafHVxjZkZN8FeS_qPP/view?usp=drive_link

Questions, Comments, & Concerns - [1:11:37]

1. Social Media: Member Kate Ozawa asked if there was anything available to post onto the Board's social media to make others aware of this program. Henry mentioned that he can get in touch with the Department of Environmental Services' Public Information Officer to provide graphics.
2. Odor and Pest Management: Member Kim asked about preventing rodent/animal problems. Henry explained best management practices (BMPs) will be taught at community workshops including layering green waste and food waste, and freezing food waste.
3. Kitchen Container Usage: Member Kim asked about using a kitchen container. Henry clarified the container is just a holding device to put in the freezer, but does not go into the green compost cart.
4. Restaurant Participation: Member Flores asked about reaching out to restaurants. Henry explained the City has ordinance for large generators only. Small/medium restaurants were piloted in Chinatown successfully; next step is amending the existing law to include them.
5. Revenue to City: Member Flores asked if Hawaiian Earth product sales generate revenue for the City. Henry responded no, but landfill diversion is critical priority.
6. Meat Disposal: Member Smart asked if meat products can be included in the waste. Henry confirmed yes if considered food waste, with best management practices applied.
7. Truck Load Limits: Member Darsha Lee asked about load size for drop-off. Henry clarified two truckloads per day, same as current green waste policy.
8. Budget and Sorting: Member Svrcina asked about budget and sorting. Henry explained the City went through a request for proposal (RFP) process, Hawaiian Earth won the contract, and there is cost to the City but landfill diversion is key priority.
9. Enforcement for High-Rises: Member Freed asked about enforcement and high-rise condos. Henry explained they'll monitor contamination and re-educate communities. For high-rises with private haulers, the City needs to work with private haulers to collect organic material.
10. Green Waste Current Use & Compostable Containers: Member Segura asked what happens to the current food waste. Henry shared that it goes to Hawaiian Earth to become compost and they sell their material. Member Segura also asked about food containers that are compostable. Henry shared that there are no plans to take compostable containers.
11. Composting and Coconut Rhinoceros Beetles (CRB) Concerns: Member Kaapana-aki raised concerns about Coconut Rhinoceros Beetle (CRB) in composting. Henry explained the City is developing a CRB plan with State funding and Hawaiian Earth is trained by USDA to ensure the facility is not a CRB breeding ground.
12. Plastic Bag Prohibition Rationale: Member Kupuka'a asked why plastic bags were prohibited. Henry explained concerns about PFAS and plant uptake, and that the City wants to minimize contamination at source.

VI. REPORTS OF CHAIRS AND BOARD COMMITTEES - [1:31:07]

Chair's Report - [1:31:07]: No report, but Chair Bass informed the Board if they have any comments that they would like her to send to HiSFA on the behalf of the Board that they are to be sent to her before Friday, February 20, 2026.

Community Partnerships and Community Outreach - Kate Ozawa, Chair - [1:31:33]: Member Kate Ozawa reported she has been updating the Neighborhood Board's Instagram with posts about upcoming events and City initiatives.
Community Recognition and Service Awards - Josie Kaʻanehe, Chair - [1:32:08]: No report.

Community Maintenance and Walk Audit - Ken Inouye & Skyler Ross, Co-Chairs - [1:32:14]: Member Inouye reported that one of the items that they received which was a complaint regarding Meheula Parkway has been addressed. Member Ross mentioned that there are 2 more items pending on the City and County's response.

Planning, Zoning, Sustainable Development, and Climate Resilience - Trevor Nagamine, Chair - [1:32:43]: Member Nagamine shared that his brother was able to purchase a home in Koa Ridge recently, which allows him to stay in Hawai'i.

Transportation & OMPO - Ed Flores, Chair - [1:34:04]: No report.

Military Affairs and Emergency Management - Dennis Kim, Chair - [1:34:18]: No report, but Member Kim mentioned that the visit to the Helicopter Aviation Battalion Facilities may not be until March or April of 2026.

Health, Houselessness, and Human Services - Darsha Lee, Chair - [1:34:55]: No report, but provided a follow-up on Board Member Gustafson's October 2025 concern about the Rainbow Tunnel in Mililani: HPD addressed the safety issues, and a recent nighttime check of the area showed no problems. Residents are encouraged to call police if anything new arises.

Questions, Comments, & Concerns - [1:36:36]

1. Point-in-Time Count in Mililani: Member Marilyn Lee asked what was the point-in-time count conducted in the Mililani area. Member Darsha Lee said she would need to follow up with Kealahou West Oahu, the local homeless outreach service provider, for more details.
2. What to Do When You See Someone Sleeping in Public: Member Smart asked what residents should do if they see someone sleeping in public. Member Darsha Lee shared that it depends on the situation. If it's a safety concern, call HPD 911 (non-emergency). If the person is simply unhoused with no safety issue, Member Darsha Lee can be contacted directly — she will go out to speak with the individual and connect them with Kealahou West Oahu for services.
3. Point-in-Time Count Frequency and Results: Member Kim asked if the point-in-time count is switching to every other year, and when will the latest results will be available. Member Darsha Lee also heard that the count may switch to every other year due to funding and volunteer concerns, but will follow up to confirm. As for results, it typically takes until at least summer to compile the data. She will share results with the board once available.

Parks and Recreation - Sabrina Gustafson, Chair - [1:40:21]: Member Gustafson shared that the Department of Parks and Recreation (DPR) will announce in February 2026 that three local parks that the Neighbor Board 25 passed at their November 2025 meeting, along with three dozen others across the island, will now allow dogs on leashes. Signs are expected to be posted by the end of February 2026 to early March 2026. Additionally, Chair Bass is asked to resend a letter to Nate, who has not yet received the copy that was sent in December 2025.

Education - Marilyn Lee, Chair - [1:41:35]: Member Marilyn Lee reported that the Mililani Public Library is hosting a book club on Monday, February 2, 2026 discussing "The Anxious Generation" (cell phones & kids), a WWII Japanese Hawai'i talk on Saturday, March 7, 2026, and a book sale on Saturday, February 21, 2026 from 9:00 a.m. – 2:00 p.m. Mililani High School has 2,221 students enrolled, with graduation on Sunday, May 24, 2026 and Golden Scholars Night in May 2026. Mililani Uka Elementary hosts a STEAM Night & Book Fair on Friday, January 30, 2026 from 5:00 p.m. – 7:00 p.m., featuring new clubs including underwater robotics, indie robotics, and art, plus a basketball team gearing up for a March 2026 tournament.

- Mililani Public Library - Author Talk: https://drive.google.com/file/d/1ikqir8kq2BpawS6Td-JxVKIqcnW8dPl6/view?usp=drive_link
- Book Club Gathering: https://drive.google.com/file/d/1Mf1cuosR9D77gtmUtv_8ikM2F-FTK-XJ/view?usp=drive_link

VII. ELECTED OFFICIALS' REPORTS - [1:45:48]

Office of Hawai'i's 1st Congressional District, Congressman Ed Case - [1:45:53]: No representative present.

Office of Hawai'i State Governor Josh Green - Toni Schwartz - [1:46:04]: Toni Schwartz reported that Governor Green delivered his final State of the State address for his first term, doubling down on priorities: lowering cost of living, building housing at historic scale, reducing homelessness, strengthening healthcare, and protecting Hawaii's environment. Key initiatives highlighted: lowering cost of living, building housing, addressing homelessness with a healthcare approach, growing the economy, creating local jobs, protecting the environment, and strengthening healthcare statewide.

- Newsletter: https://drive.google.com/file/d/1Uy8XFUbKpNf7DqzzHRZDarfY58VgTVTM/view?usp=drive_link

Questions, Comments, & Concerns - [1:47:36]

1. HOA Maintenance Fee Regulation: Member Rana asked about legislation to keep associations in check regarding maintenance fees. Toni will check on this.
2. ICE Cooperation and Federal Funding: Member Smart asked if police were encouraged to work with ICE and if there's been anti-ICE activity. Toni explained the Governor's position is local law enforcement should not work on immigration matters as regular duties. The Federal Government cannot force State/local law enforcement to enforce Federal laws. The State has saved almost $1 billion in funding through litigation.
3. Kamehameha Highway Wall Mural: Member Svrcina noticed the wall along Kamehameha Highway (near Waipio Uka Street) had been painted in multiple colors going South East and wanted to know who authorized it, how much it cost, and whether the community was consulted. Chair Bass explained it was a DOT collaboration with State Senator Kidani and Representative Corey Chun, involving over 100 students from Mililani, Pearl City, and Waipahu High Schools. The mural was painted to reduce graffiti, with HPD providing safety coverage. However, the specific costs and community consultation process were unknown, and a follow-up was requested.
4. Highway Message Boards: Member Svrcina questioned who authorizes the messages on State highway digital boards, noting some seem unhelpful or distracting rather than providing useful traffic information.
5. Measles Epidemic & Vaccine Consortium: Member Marilyn Lee asked whether Hawai'i is still part of a vaccine consortium formed a few months ago, given the governor's concern about the measles epidemic on the mainland and the national Department of Health's negative stance on vaccines.

Office of the City & County of Honolulu Mayor Rick Blangiardi - Jocelyn Doane - [1:55:17]: Jocelyn reported that new Ocean Safety Chief Kurt Logger was sworn in. Construction started on the second floor at Waiʻanae police station for HPD workforce space. Highlighted doubling water sensible rebates with BWS. Follow-ups on previous requests: DFM started work on root exposure and buckling pavement on Meheula Parkway; DFM initiated a request to DPP for sidewalk inspection on damaged sidewalks.

- Newsletter: https://drive.google.com/file/d/1EWorGL47PxS5j8vBHbIL-pwllqiSNylw/view?usp=drive_link

Questions, Comments, & Concerns - [1:58:14]

1. HOA Legislation: Member Rana asked about HOA regulation. Jocelyn was unaware if the City has regulatory authority over HOAs, but she will check if somebody else may know.
2. Sidewalk Uplift and Graffiti Reporting: Member Smart asked if she would need to resubmit the sidewalk uplift and graffiti reports into the database (link located on the agenda) again. Member Ross requested that the reports be submitted again.
3. Red Light on Kamehameha Highway Turning Left to Ka Uka Boulevard Stayed Red for 15 Minutes: Member Ka'anehe mentioned that the light on Kamehameha Highway turning left to Ka Uka Boulevard was red for 15 minutes so vehicles had to pass the red light including herself. She mentioned that she called 911 asking if they could send an officer to direct traffic, but the response that she received was that someone will get there when they can get there. Jocelyn responded that she will follow up on the policy.

Office of the City & County of Honolulu Council District 8, Councilmember Val Okimoto - [2:04:01]: Aaron reported that a new streamlined app now allows anonymous reporting routed directly to the appropriate department. On HOAs, Governor Green created a working group to address rising fees that have exceeded mortgage payments for some Mililani residents. Two notable bills: Bill 46 (passed) requires HPD to release public information to the media, and Bill 76 (pending) would create a free searchable database of city revenues updated monthly.

- Newsletter: https://drive.google.com/file/d/1i9qUelEnhXg3N15lljHNZi7iQMIgfwnr/view?usp=drive_link

Questions, Comments, & Concerns - [2:05:38]

1. Bus Fares: Member Katherine Ozawa asked if Councilmember Okimoto would vote differently in the future towards the increase of the bus fares. Aaron stated that he will have to get back to her.

Office of the City & County of Honolulu Council District 2, Councilmember Matthew Weyer - Kelly Anaya - [2:06:34]: Kelly reported that the Waipio Soccer Complex will be temporarily closing for dedicated field and facility maintenance. On the Mount Kaʻala Gondola project, DPP held a public hearing on Monday, January 12, 2026 to reconsider the conditional use permit based on new information, but has requested up to a 60-day extension due to the volume of testimony received — an update is forthcoming. HPD and the Army are expected to address the homeless situation on Waikalani Drive and Kamehameha Highway next month, with HPD also looking into a situation near Kipapa Bridge.

Office of State Senate District 18, Senator Michelle Kidani - Trevor - [2:09:43]: Trevor reported legislative session began Wednesday, January 21, 2026. Senator's priorities: creating safe learning environments, enhancing school facilities, integrating technology, strengthening teacher/staff retention, and developing recruitment pathways.

- Newsletter: https://drive.google.com/file/d/14bJcP5MGtHA3-fRyNrSXTn-f4jrDah0E/view?usp=drive_link

Questions, Comments, & Concerns - [2:11:20]

1. Highway Wall Painting Cost: Member Svrcina asked how much was spent painting the wall. Trevor indicated this is a DOT question.
2. Polynesian Voyaging Society Student Access: Member Darsha Lee asked about making the Sand Island Polynesian Voyaging Society program available to Mililani students. Trevor will pass the request to the office.
3. Math Scores & Teaching Concerns: Member Kupuka'a raised concerns about low student math scores and reports that teachers are rushing through lessons without ensuring students grasp the concepts. She questioned whether professional coaches or additional support are being brought in to help teachers. Trevor acknowledged the concern and shared that he will try to get a response for the next meeting. He also mentioned that Representative La Chica may have a response.

Office of State Senate District 17, Senator Donovan Dela Cruz - Charles Miller - [2:15:21]: Charles reported Senator spoke at Hawai'i Food System Summit in December, 2025. Opening day was Wednesday, January 21, 2026. Senator's priorities: biosecurity and agriculture, workforce development, and regional economic development. The Ways and Means Committee has been conducting budget briefings.

Office of State House District 38, Representative Lauren Matsumoto - [2:16:31]: Representative Matsumoto reported visiting Hawaiian Earth and landfill, noting limited space remaining. Distributed bill package and community input survey results showing top priorities. The House has a 10-bill limit this year. Reported illegal dumping on the emergency access road was handled by DOT.

- Newsletter: https://drive.google.com/file/d/1Ga0eAsvqVueaYzgiO_ooQJyVha31AXtK/view?usp=drive_link
- District 38 2026 Pre-Session Community Input Survey Results: https://drive.google.com/file/d/1H9ZX5gboWf7SRAFgn0k50qm_9pBbcGto/view?usp=drive_link

Questions, Comments, & Concerns - [2:19:47]

1. No Tax on Food and Medical Services Bill: Member Ross asked if there were any bills being introduced based on survey results regarding taxes. Representative Matsumoto confirmed a bill is being introduced to eliminate tax on food and medical services — the top two priorities from the survey. Hawai'i is one of only two States that taxes medical services. The bill has been introduced every year and is gaining support from other legislators.
2. Survey Methodology: Member Svrcina asked whether respondents could choose more than one answer. Representative Matsumoto stated that in the first question, respondents could pick their top three choices, which is why the numbers exceed the 314 total responses. For the tax program question, respondents could only pick one answer, so the numbers reflect the actual number of respondents.
3. Mid-Session Survey Distribution: Member Segura asked whether the mid-session survey is sent broadly or only to initial respondents. Representative Matsumoto responded that it goes to all District 38 residents via every door direct mail. However, due to house print shop limitations, it may be restricted to registered voters only. Residents were encouraged to register to ensure they receive future mailings.
4. Bill Packet Clarification: Member Gustafson noticed a labeling error on a health-related bill that appeared to be about real estate licensing. Representative Matsumoto acknowledged the mistake and confirmed a corrected bill package with proper numbers and titles will be distributed at the next neighborhood board meeting.

Office of State House District 37, Representative Trish La Chica - [2:25:03]: Representative La Chica reported that she is in her third session as Vice Chair of the House Education Committee. She provided updates on several community priorities. Budget efforts include renovations for the Mililani Public Library and funding for a new Koa Ridge Elementary school design. A December 2025 community talk story covered the Aloha Stadium development, a proposed Bus 51 dedicated lane to Pearl Highlands Station, and the Mililani Go Kid School Carpool pilot, which now has about 170 families engaged. Follow-ups included a traffic light timing issue on Kamehameha Highway, efforts to bringing a program to Mililani schools, and a numeracy coaching bill modeled after successful programs in Alabama and Kentucky — aimed at addressing Hawaii's low math proficiency rates of 42% for 4th graders and 23% for 8th graders statewide. She also introduced her staff, Committee Clerk Alani Santana and Legislative Aide Tiara Tenorio.

- Newsletter: https://drive.google.com/file/d/13I8wSB5pOait2TcoS1A90btJhGQVf_P_/view?usp=drive_link

Questions, Comments, & Concerns - [2:11:20]

1. Hoopla Library App: Community member Rhonda suggested adding Hoopla to the Mililani Public Library as it offers a wider book selection than Libby with shorter wait times. The representative took note.
2. Common Core Math Curriculum: Member Smart asked if Common Core is still being used, citing concerns it has hurt math understanding. Representative La Chica is unsure if DOE is moving toward a standardized universal curriculum due to schools in the past being able to choose from a list of other types of curriculums.

3. Dash Cam for Personal Use: Member Kupuka'a asked how to obtain a personal dash cam due to unsafe driving on the roads. Representative La Chica noted there may be a bill that would consider requiring HPD to install dash cams in all police vehicles for traffic enforcement.
4. Safety of Educational Workers & Code of Conduct: Member Flores referenced HB 1592, which would increase criminal penalties for assaulting educational workers, and suggested revisiting DOE's code of conduct last updated around 2001–2010. Representative La Chica confirmed educator safety is a growing priority for both DOE and the Hawai'i State Teachers Union, and that multiple approaches will be explored this session.

Office of State House District 46, Representative Amy Perruso - [2:40:09]: Representative Perruso shared data on homeless outreach worker coverage showing districts 2 and 3 (Wahiawa, Mililani, Waipahu, Pearl City) have 509 projected to serve with only 2 workers (255 people per worker) compared to urban core with 315 served by 4 workers (79 per worker). She proposed working on a resolution to address this disparity.

Questions, Comments, & Concerns - [2:44:37]

1. Homeless Outreach Worker Disparity: Chair Bass acknowledged new information and proposed scheduling a meeting with Representative Perruso and Health, Houselessness, and Human Services Committee Chair Darsha Lee to gather information and determine next steps for potential resolution.

VIII. ANNOUNCEMENTS - [2:47:19]

Next Board Meeting: Wednesday, February 25, 2026 at 7:00 p.m. at Mililani High School H Building and via Webex. This will be after the SFA draft environmental assessment comment period closes.

Broadcasting: Meeting will be broadcast on ʻŌlelo Channel 49 every second Thursday at 9:00 a.m., and on ʻŌlelo Channel 54 every first and third Saturday at 9:00 a.m.

IX. ADJOURNMENT - [2:47:57]

The meeting adjourned at 9:47 p.m.

Submitted by: Rachel Cristobal, Neighborhood Assistant, NCO
Reviewed by: Dylan Whitsell, Deputy, NCO
Finalized by: Sabrina Gustafson, Secretary

(This page intentionally left blank.)

Appendix C

Mililani Mauka-Launani Valley Neighborhood Board No. 35

(This page intentionally left blank.)

MILILANI MAUKA/ LAUNANI VALLEY NEIGHBORHOOD BOARD NO. 35
c/o NEIGHBORHOOD COMMISSION • 925 DILLINGHAM BOULEVARD SUITE 160 • HONOLULU, HAWAII, 96817
TELEPHONE: (808) 768-3710 • FAX: (808) 768-3711 • INTERNET: http://www.honolulu.gov/nco

REGULAR MEETING AGENDA
TUESDAY, OCTOBER 15, 2024, at 7:00 P.M.
MILILANI MAUKA ELEMENTARY SCHOOL
95-1111 MAKAIKAI STREET, MILILANI HI 96789
AND VIA WEBEX

WebEx Link: https://cchnl.webex.com/cchnl/j.php?MTID=mda311055081761002939 0c6f72decace
Meeting number / Access Code: 2490 158 5754
Password: NB35 (6235 from phones and video systems)
Join by phone: +1-408-418-9388 (United States Toll)

Meeting Materials Link: https://drive.google.com/drive/folders/1zCauqWgTX4syd8vO3Ci5UCL_ePiRXlbE
Video Recordings: http://www.youtube.com/@cityandcountyneighborhoodc2559

Rules of Speaking: Anyone wishing to speak is asked to raise their hand, and when recognized by the Chair, to address comments to the Chair. All dialogue at the meeting will be conducted by use of the microphone. Those joining the meeting on WebEx are reminded to mute their speakers until they wish to be recognized by the Chair. Anyone not following these rules will be ruled out of order by the Chair. Those providing Presentations to the Board are encouraged to do so via a PowerPoint presentation, with a projector and provide handouts for the board and the community. The public concerns and comments are limited to three (3) minutes each. Please silence all electronic devices.

Note: The Board may take action on any agenda item. As required by the State Sunshine Law (HRS 92), specific issues not noted on this agenda cannot be voted on, unless allowed for under HRS 92. A two-thirds (2/3) vote (5) of this 9- member Board is required to meet quorum requirements.

I. CALL TO ORDER: Chair Dean I. Hazama

II. PRESENTATION OF THE COLORS & PLEDGE OF ALLEGIANCE: Scouts BSA Troup 664

III. MEETING DECORUM: Vice Chair Keith Tamashiro

IV. AWARDS PRESENTATION – Army BOSS Program – SPC Morgan Creasy

V. MONTHLY REPORTS

A. Honolulu Fire Department (HFD)

B. Honolulu Police Department (HPD)

C. Board of Water Supply (BWS)

D. Military Representative Report

VI. BOARD BUSINESS

A. Presentation – Installation of Two Telecommunication Facilities in Mililani Mauka – Erika Reyes (AT&T Mobility)

B. Mililani Holiday Parade – Mililani Lions – Marilyn Lee

C. Presentation – Hawaii School Facilities Authority (HISFA) – Cheri Nakamura

VII. RESIDENT/COMMUNITY CONCERNS: Any community member can come forward and express any comment or concern within decorum. Please, limit your comments to three (3) minutes each per issue for items not on the agenda.

VIII. ELECTED OFFICIALS

A. Office of Governor Josh Green – Melanie Martin

B. Office of Congressman Ed Case – Nestor Garcia

C. Office of the Mayor Rick Blangiardi – Carrie Castle

D. Office of Councilmember District 8 – Val Okimoto

E. Office of Councilmember District 2 – Matt Weyer

F. Office of Senator District 17 – Donovan Dela Cruz

G. Office of Representative District 38 – Lauren Matsumoto

H. Office of Representative District 46 – Amy Perruso

I. Office of Representative District 37 – Trish La Chica

J. State Department of Transportation – Casey Abe

IX. APPROVAL OF BOARD MEETING MINUTES: Tuesday, September 17, 2024, Regular Meeting Minutes

X. REPORTS

A. Patsy T. Mink Central Oahu Regional Park

B. Committees

a) Education – Steven Melendrez/Anna Hudson

b) Military and Civil Defense – Keith Tamashiro

c) Parks and Recreation – Susan Miyamoto

d) Planning, Permitting and Zoning – Stanton Oishi & Dana Agader

e) Transportation – Dean Hazama

f) Recognition and Service Awards – Alice Rogers

XI. ANNOUNCEMENTS

A. The next Mililani Mauka/Launani Valley Neighborhood Board meeting will be held on Tuesday, November 19, 2024, at 7:00 p.m. at Mililani Mauka Elementary School and via WebEx.

XII. ADJOURNMENT

A map of the subdistrict boundaries is at – https://www.honolulu.gov/rep/site/nco/maps/35Mililani-Mauka.jpg.

Capital Improvement Projects (CIP) and Budget Planning. Suggestions for projects in the Neighborhood Board district and adjacent areas are welcome at any time to prepare for planning actions and the next fiscal year.

A mailing list is maintained for interested persons and agencies to receive this board's agenda and minutes. Additions, corrections, and deletions to the mailing list may be directed to the Neighborhood Commission Office (NCO) at Kapālama Hale, 925 Dillingham Boulevard, Suite 160, Honolulu, HI 96817, by telephone on (808) 768-3710, fax (808) 768-3711, or e-mailing nco@honolulu.gov. Agenda documents and minutes are also available online at http://www.honolulu.gov/nco/boards.html

All written testimony must be received in the Neighborhood Commission Office 48 hours prior to the meeting. If within 48 hours of the meeting, written and/or oral testimony may be submitted directly to the Board at the meeting. If submitting written testimony, please note the Board and agenda item(s) your testimony concerns. Send to: Neighborhood Commission Office, 925 Dillingham Boulevard, Suite 160, Honolulu, HI 96817, fax (808) 768-3711, or email nbtestimony@honolulu.gov.

If you need an auxiliary aid/service or other accommodation due to a disability or an interpreter for a language other than English, please call the Neighborhood Commission Office at (808) 768-3710 between 8:00 a.m. and 4:00 p.m. or send an email to nco@honolulu.gov at least three (3) business days before the scheduled meeting. It may not be possible to fulfill requests received after this date.

MILILANI MAUKA / LAUNANI VALLEY NEIGHBORHOOD BOARD NO. 35

NEIGHBORHOOD COMMISSION | 925 DILLINGHAM BOULEVARD SUITE 160 | HONOLULU, HAWAIʻI, 96817
PHONE (808) 768-3710 | FAX (808) 768-3711 | WEBSITE: http://www.honolulu.gov/nco

REGULAR MEETING WRITTEN SUMMARY FOR VIDEO RECORD
TUESDAY, OCTOBER 15, 2024 at 7:00 P.M.
MILILANI MAUKA ELEMENTARY SCHOOL **–** 95-**1111 MĀKAʻIKAʻI STREET, MILILANI, HI 96789**
AND VIA WEBEX

Video recording of this meeting can be found at: https://www.youtube.com/watch?v=uefFmQxJysE

Reports & other meeting materials can be found at:
https://drive.google.com/drive/folders/1zCauqWgTX4syd8vO3Ci5UCL_ePiRXlbE

I. CALL TO ORDER **–** [0:00:18]: 7:00 p.m.

Chair Dean I. Hazama called the meeting to order at 7:00 p.m.; Quorum was established with 6 members present. Note – This 9-member Board requires 5 members to establish a quorum and to take official Board action.

Board Members Present: Dean Hazama, Anna Hudson, Steven Melendrez, Susan Miyamoto, Alice Rogers, Keith Tamashiro.

Board Members Absent: Dana Agader, Theresa Kuehu, and Stanton Oishi.

Guests: Firefighter Anthony Rossi (Honolulu Fire Department); Lieutenant Scott Vierra (Honolulu Police Department); Lieutenant Colonel Melander (Military Representative); Carrie Castle (Mayor Rick Blangiardi); Aaron Wilson (Councilmember Val Okimoto); Kelly Anaya (Councilmember Matt Weyer); Malachi Burrows (Senator Donovan Dela Cruz); Representative Lauren Matsumoto (House District 38); Representative Amy Perruso (House District 46); Erin Conway (Representative Trish La Chica); Casey Abe (State Department of Transportation – Highways Division); Bryce Novak (Centerline Communications); Marilyn Lee (Mililani Lions Club); Cheri Nakamura (Hawaii School Facilities Authority); SPC Morgan Creasy (BOSS Program); Scouts BSA Troop 664; Rick Broxsom; Sharon Geary, Nathan Hokama, Cory Soon, Jadine Urasaki, Sabrina Gustafson (Residents); Camilia Epa Gomes (Neighborhood Commission Office). Note: Name was not included if not legible. There were 39 total participants.

II. PRESENTATION OF THE COLORS & PLEDGE OF ALLEGIANCE – [0:00:20]: Scouts BSA Troop 664.

III. MEETING DECORUM – [0:01:50]: Vice Chair Keith Tamashiro recited the rules of speaking.

IV. AWARDS PRESENTATION **–** SPC Morgan Creasy, Army BOSS Program – [0:02:40]: The Board's Recognition & Service Awards Committee presented SPC Morgan Creasy with a Certificate of Recognition.

V. MONTHLY REPORTS – [0:04:16]

Honolulu Fire Department (HFD) – [0:04:20]: Firefighter Rossi provided the report and shared the public can send their questions to HFD's email. The inquiry on the Mililani Mauka brush fire is still under investigation by the U.S Department of the Interior and HFD is unable to comment or provide updates pending federal investigation. The incidental report number is 72856 for those who would like to go on the HFD website to request for more information on the brush fire. The representative shared the incident statistics for September 2024. The fire safety tip for the month is in regards to smoke alarms.

- Report: https://drive.google.com/file/d/1ArIxGYklNiFtVYzfk-M9Y6qnMO5L4nwy/view?usp=drive_link
- Honolulu Fire Department Community Relations Office: HFDNHB@honolulu.gov

Questions, comments, and concerns followed – [0:06:10]

Honolulu Police Department (HPD) – [0:06:40]: Lieutenant Scott Vierra provided the report and shared the incident statistics for September 2024. The safety tip for the month is in regards to burglary prevention.

- HPD Data Dashboard: Microsoft Power BI
- Crime Mapping: https://www.crimemapping.com/

Questions, comments, and concerns followed – [0:10:00]

Board of Water Supply (BWS) – [0:10:50]: No representative present.

- Report: https://drive.google.com/file/d/16y_r--1ye-cIu3EfgQTjUf_51v4LnX35/view?usp=drive_link

Military Representative Report – [0:10:55]: Lieutenant Colonel Melander provided the report and shared that Wednesday, October 16, 2024 is the last day for the Pacific Multinational Readiness exercise. Regular training advisories for the month of October include jungle operations course, small arms blank fire, and ranger tactics from 6:00 a.m. to 6:00 p.m. on October 14-19 and October 21-25. The U.S Army Garrison Hawaii Job Fair is open to the public and will be on Tuesday, November 19, 2024 from

8:30 a.m. to 2:00 p.m. at the Aliamanu Military Reservation (AMR) Physical Fitness Center (1780 Bougainvillea Loop, Honolulu HI 96818). Job applicants are advised to bring proof of two references, I.D card, social security card, resume, and/or application. Employment opportunities range from business operations in golfing, bowling, food service, child youth services and more.

- To find more information on the U.S Army Garrison Job Fair: https://hawaii.armymwr.com/employment
- Subscribe to Monthly Training Advisory Schedule: usag.hawaii.comrel@army.mil
- Community Concern Hotline: (808) 787-1528

VI. BOARD BUSINESS – [0:13:40]

Presentation – Installation of Two Telecommunication Facilities in Mililani Mauka – [0:13:40]: Bryce Novak (Centerline Communications) shared AT&T is proposing two new wireless communication facilities (WCF) in Mililani Mauka to fill coverage gaps. Mililani Mauka currently has only one AT&T tower near the H2 on-ramp. The first proposed site will be located on the rooftop of the Central Self Storage building (95-1080 Lehiwa Drive, Mililani, HI 96789). The second proposed site will be a monopine tree tower in an orchard farm (95-1211 Kapanoe St., Mililani, HI 96789), providing coverage to the eastern portion of the district. PowerPoint slides were provided to show the maps of the coverage area, WCF design, and location for the proposed towers. Zoning approval for the proposed sites is expected in November with construction planned for 2025.

- Presentation: https://docs.google.com/presentation/d/1Xub2lQO0ahmyqWXCVzhiiq3Uh2RbXpfr/edit?usp=drive_link&ouid=111917663458444584436&rtpof=true&sd=true

Questions, comments, and concerns followed – [0:20:40]

Mililani Holiday Parade – Mililani Lions – [0:32:41]: Marilyn Lee (Mililani Lions Member) shared information on the upcoming 37th Annual Mililani Holiday Parade. The parade is presented by the Mililani Lions Club and is sponsored by Mililani Shopping Center, Town Center of Mililani, Honolulu Police Department, and Hawaii Food Bank. There will also be a food donation drop-off area at the school. The parade will be Saturday, December 7, 2024 and start at 9:00 a.m. at Mililani High School Kauinana Stadium and end at 10:30 a.m. at the Town Center of Mililani. The school gates will open to the public at 7:00 a.m. There is a QR code provided on the parade flyer for those who are interested in participating in the parade. There will be family friendly activities at the Town Center of Mililani after the parade.

- Mililani Holiday Parade Flyer: https://drive.google.com/file/d/1jRCmo_x8vaYNxs0l6pI3it1Ij0Tgcnsa/view?usp=drive_link

Questions, comments, and concerns followed – [0:36:40]

Presentation – Hawaii School Facilities Authority (HISFA) – [0:37:22]: Cheri Nakamura (HISFA community liaison) shared updates on the teacher housing project. HISFA is a state agency responsible for building workforce housing on school lands. The bill to provide affordable teacher housing as a recruitment and retention strategy received a lot of support and attention during the 2023 legislative session. The agency will be leading the pilot program with Mililani High School teacher housing project, which will be the first teacher workforce housing project in the state. In July 2023, Governor Josh Green Signed Act 1702 into law which provided HISFA, the power to partner with public and private development agencies to develop housing projects on school lands. In December 2023, HISFA issued a request for proposal (RFP) to find a partner to design, build, finance, operate, and maintain the housing project. Ms. Nakamura shared there was miscommunication on their end to the community and clarified the proposal is not the final plan. An award was released to Pacific Housing Assistance Corporation, a nonprofit organization with over 40 years in affordable housing developments. The proposal is the starting point and HISFA is currently in the phase of developing the agreement which includes stakeholder engagement. The agency will continue to engage with the community and provide updates as they go through the EAA process.

- HISFA Request for Proposal Timeline: https://drive.google.com/file/d/1Kn8Pt9ow-A6Ehg6DilcIYTVH5nVZBE5v/view?usp=drive_link
- Contact Information for HISFA project: cheri.nakamura@hisfa.org

Questions, comments, and concerns followed – [0:44:45]

VII. RESDIENT/COMMUNITY CONCERNS – [0:56:30]:

Air Force C-17 Overflights – [0:57:00]: A Mililani resident raised concern with Air Force C-17 aircrafts low overflights over the middle of Mililani Town and the community during the Joint Pacific Multinational Readiness Center annual training exercise. The resident shared the overflights were slow and approximately 1000 ft. above rooftops. The resident shared his concerns that the risk and danger to the Mililani community are extremely high for low overflights. The resident noted the aircrafts flying outside of the scheduled notice times given to residents. The resident felt there were little to no info briefings or discussions about the overflights presented to the Mililani community or the Neighborhood Board. The resident shares suggestions of actions to correct the issue.

VIII. ELECTED OFFICIALS – [1:03:25]

Office of Governor Josh Green – [1:03:25]: No representative present.
- Newsletter: https://drive.google.com/file/d/1mqDFdmilBsl4VimoNGC-QfzarYPa7t4C/view?usp=drive_link

Office of Congressman Ed Case – [1:03:30]: No representative present.
- For any questions, please visit website: https://case.house.gov/
- Contact Information for Honolulu District Office: (808) 650-6688 or email at ed.case@mail.house.gov

Office of Mayor Rick Blangiardi – [1:03:40]: Deputy Director Carrie Castle (Department of Budget and Fiscal Services) provided the report and shared highlights from the monthly newsletter for October 2024 and provided follow-up responses on questions raised at last month's Board meeting.
- Newsletter: https://drive.google.com/file/d/1AeGdYSFgefDYcCSsK5VCit_hroEPGpS2/view?usp=drive_link

Office of Councilmember District 8, Val Okimoto – [1:08:20]: Aaron Wilson provided the report and highlighted legislative updates. Bill updates were provided on Bill 52 (relating to electric bicycles) and Bill 46 (empty homes tax). Mr. Wilson shared that the contractors are responsible for putting up signs to notify the public when they will be working in specific areas for the Miliani Mauka road re-pavement project.
- Newsletter: https://drive.google.com/file/d/1giKhR_q27z_H4kNoqOteEWDPpRSitpKc/view?usp=drive_link
- Contact Information for Councilmember Okimoto's Office: (808)768-5008 or email valokimoto@honolulu.gov

Office of Councilmember District 2, Matt Weyer – [1:09:30]: Kelly Anaya provided the report and highlighted legislative updates. Councilmember Weyer would like to remind the public of the legislative process that all Bills require three readings at the full City Council to be passed before it is sent to the mayor for signing into law. Bill updates were provided on the following measures: Bill 40 (relating to professional self-certification); Bill 22 (relating to the fire code) which legalizes certain fireworks; Resolution 24-213, which provides recycling receptacles in City parks and recreational facilities; Bill 47 (kupuna tax relief bill); and Bill 45 (low-income tax credit increase bill). The City Council honored Genshu Price, a student, for his leadership in sustainability and educational empowerment.
- Newsletter: https://drive.google.com/file/d/1_DYFTaWu4qPAi36wKRpPl9hH6OQnu6AT/view?usp=drive_link

Office of Senator District 17, Donovan Dela Cruz – [1:12:00]: Malachi Burrows provided updates and shared last month was "Workforce Development" month. Senator Dela Cruz has worked on building the workforce in Hawaii by supporting key industries in Hawaii. The Workforce Development Council awarded Senator Dela Cruz the legislator of the year. Mr. Burrows highlighted noteworthy initiatives that Senator Dela Cruz promoted to help create paid internships in government work and in the tourism industry. Senator Dela Cruz and other members of the legislature recently went on a site visit to New Zealand to learn more about their biosecurity system.

Questions, comments, and concerns followed – [1:22:30]

Office of Representative District 38, Lauren Matsumoto – [1:18:00]: Representative Matsumoto provided her report and shared newsletter highlights for October 2024 on the following: Hawaii Children Youth Summit; Mililani Ike Elementary School was named a 2024 National Blue Ribbon School and recognized as an exemplary high performing school; Mililani Skate Park has lights installed thanks to community efforts; Mililani High School Homecoming game; Kipapa Elementary Community Partner Breakfast; updates on the Mililani Mauka emergency road project; school bus routes restored; updates on the condo insurance increase are available on www.repmatsumoto.com; year long road repair project in the Mililani Mauka district; Mililani YMCA will have their "Trunk and Treat" family friendly event on October 26, 2024 from 4:30 p.m. to 7:30 p.m.
- Newsletter: https://drive.google.com/file/d/1Bye46jX7UhlbD-_eXjFf_R1BE_cOmW-Y/view?usp=drive_link

Questions, comments, and concerns followed – [1:22:30]

[1:23:18] – Technical difficulties with the microphone did not capture comments from Member Rogers on condo insurance issues.

Office of Representative District 46, Amy Perruso – [1:25:50]: Representative Perruso provided her report and highlighted the following: Teacher of the Year Award nominee went to Ian Cablay, who is the band director for Waialua High and Intermediate School; People's Budget Forum will be on Thursday, October 17, 2024 from 3:30 p.m. to 5:00 p.m. via Zoom; People's Budget Forum Part 3: Gathering Priorities will be on Wednesday, October 30, 2024 from 6:00 p.m. to 8:00 p.m. at Mililani High School Library; Department of Education school meals report; University of Hawaii School Systems will be choosing its next president.

Office of Representative District 37, Trish La Chica – [1:30:15]: Erin Conway provided the report and highlighted the following: discussion on priorities with Honolulu Police Department Acting Major Joel Gonsalves; discussion with schools to discuss needs and priorities for the next legislative session; the office is currently preparing for the upcoming legislative session and will include measures to address school bus related issues; follow-up responses on questions raised at last month's Board meeting; October

is Filipino American History Month and Rep La Chica and members of the legislature are organizing a number of events to celebrate.

State Department of Transportation – [1:32:00]: Casey Abe provided the report and highlighted the following: maintenance crew painted over graffiti on electrical box near Mililani Town off-ramp; information on the Oahu Regional Transportation Plan 2050.

- Oahu Regional Transportation Plan 2050: https://oahumpo.org/ortp/

Questions, comments, and concerns followed – [1:34:10]

IX. APPROVAL OF BOARD MEETING MINUTES – [1:36:20]

Tuesday, September 17, 2024, Regular Meeting Written Summary for Video Record – [1:36:20]: Hearing no objections, the Tuesday, August 20, 2024 Regular Meeting Written Summary for Video Record was approved as written; 6-0-0 (Aye: Hudson, Melendrez, Miyamoto, Rogers, Tamashiro; Hazama; Nay: None; Abstain: None) – [1:36:40]

X. REPORTS – [1:36:43]

Patsy T. Mink Central Oahu Regional Park – [1:36:44]: No report.

Committees – Education – [1:36:50]: Committee Co-Chairs Anna Hudson and Steven Melendrez provided their reports. Co-chair Hudson highlighted the following: Mililani Ike Elementary School was awarded 2024 National Blue Ribbon School and achieved the highest accolades in reading as well as ranked top five in math proficiency; concerns were raised that motor vehicles are not stopping for Mililani Ike students at the crosswalk on Meheula Pkwy; Mililani Ike will be partnering with the Armed Services of YMCA to collect food thanksgiving baskets for local military families in need; donation for the baskets can be dropped off by Wednesday, November 6, 2024; there will be a complex cross country meet at Mililani Middle School featuring several local elementary schools on Wednesday, October 23, 2024 at 9:00 a.m.; Wheeler Middle School is conducting Red Ribbon Week to bring awareness of using substances and promote drug free activities; and Leilehua High School Homecoming Parade will be on Wednesday, October 16, 2024 at 7:00 p.m. Co-chair Melendrez highlighted the following: Mililani Middle School has thirty-two (32) high interest after-school extra-curricular programs that students can join for free; the Mililani Middle School Administrative Office is open for community meetings; the School Community Council meets every second Tuesday of the month at 6:00 p.m. and the PTSO meets at 5:00 p.m.; date for yearbook makeup photos; due date to order yearbooks; try-out dates for the girls basketball team; and a calendar is provided for Mililani Middle School's 2024-2025 School Year.

- Co-Chair Melendrez Report: https://docs.google.com/document/d/1LKulUVrqChwET5eXLUejRMJq72lU14t6/edit?usp=drive_link&ouid=111917663458444584436&rtpof=true&sd=true

Questions, comments, and concerns followed – [1:41:50]

Committees – Military and Civil Defense – [1:42:25]: This item was taken out of order. No report.

Committees – Parks and Recreation – [1:42:19]: No report.

Committees – Planning, Permitting and Zoning – [1:42:23]: No report.

Committees – Transportation – [1:42:31]: No report

Committees – Recognition and Service Awards – [1:42:32]: No report.

XI. ANNOUNCEMENTS – [1:42:34]

Next Meeting – [1:42:38]: The next Mililani Mauka/Launani Valley Neighborhood Board No.35 regular meeting is scheduled for Tuesday, November 19, 2024 at 7:00 p.m. at the Mililani Mauka Elementary School and via WebEx.

Video Recordings: Videotapes of board meetings are scheduled to be shown on 'Olelo Channel 49 on the 1st Saturday of the month at 6:00 p.m., and 2nd and 4th Fridays of the month at 1:00 p.m. Videotapes of board meetings are also available on YouTube at: https://www.youtube.com/@cityandcountyneighborhoodc2559

XII. ADJOURNMENT – [1:42:48]: The meeting was adjourned at 8:43 p.m.

Submitted by: Camilia Epa Gomes, Neighborhood Assistant, NCO
Reviewed by: Dylan Buck, Community Relations Specialist, NCO
Finalized by: Dean Hazama, Chair, Neighborhood Board No.35

MILILANI MAUKA/ LAUNANI VALLEY NEIGHBORHOOD BOARD NO. 35
c/o NEIGHBORHOOD COMMISSION • 925 DILLINGHAM BOULEVARD SUITE 160 • HONOLULU, HAWAII, 96817
TELEPHONE: (808) 768-3710 • FAX: (808) 768-3711 • INTERNET: http://www.honolulu.gov/nco

REGULAR MEETING AGENDA
TUESDAY, JANUARY 21, 2025, at 7:00 p.m.
MILILANI MAUKA ELEMENTARY SCHOOL
95-1111 MAKAIKAI STREET, MILILANI HI 96789 AND
VIA WEBEX

WebEx Link: https://cchnl.webex.com/cchnl/j.php?MTID=mda311055081761002939 0c6f72decace
Meeting number / Access Code: 2490 158 5754
Password: NB35 (6235 from phones and video systems)
Join by phone: +1-408-418-9388 (United States Toll)

Meeting Materials Link: https://drive.google.com/drive/folders/1zCauqWgTX4syd8vO3Ci5UCL_ePiRXlbE
Video Recordings: http://www.youtube.com/@cityandcountyneighborhoodc2559

Rules of Speaking: Anyone wishing to speak is asked to raise their hand, and when recognized by the Chair, to address comments to the Chair. All dialogue at the meeting will be conducted by use of the microphone. Those joining the meeting on WebEx are reminded to mute their speakers until they wish to be recognized by the Chair. Anyone not following these rules will be ruled out of order by the Chair. Those providing Presentations to the Board are encouraged to do so via a PowerPoint presentation, with a projector and provide handouts for the board and the community. The public concerns and comments are limited to three (3) minutes each. Please silence all electronic devices.

Note: The Board may take action on any agenda item. As required by the State Sunshine Law (HRS 92), specific issues not noted on this agenda cannot be voted on, unless allowed for under HRS 92. A two-thirds (2/3) vote (5) of this 9- member Board is required to meet quorum requirements.

I. CALL TO ORDER: Chair Dean I. Hazama

II. PRESENTATION OF THE COLORS & PLEDGE OF ALLEGIANCE: Scouts BSA Troup 664

III. MEETING DECORUM: Vice Chair Keith Tamashiro

IV. MONTHLY REPORTS

A. Honolulu Fire Department (HFD)
B. Honolulu Police Department (HPD)
C. Board of Water Supply (BWS)
D. Military Representative Report

V. BOARD BUSINESS

A. Update on Affordable Housing Project at Mililani High School – Cherri Nakamura (HISFA)
B. Presentation on City and County of Honolulu Proposed Sewer Rate Increases – Roger Babcock (ENV)

VI. RESIDENT/COMMUNITY CONCERNS: Any community member can come forward and express any comment or concern within decorum. Please, limit your comments to three (3) minutes each per issue for items not on the agenda.

VII. ELECTED OFFICIALS

A. Office of Governor Josh Green – Melanie Martin
B. Office of Congressman Ed Case – Nestor Garcia
C. Office of the Mayor Rick Blangiardi – Carrie Castle
D. Office of Councilmember District 8, Val Okimoto
E. Office of Councilmember District 2, Matt Weyer
F. Office of Senator District 17, Donovan Dela Cruz
G. Office of Representative District 38, Lauren Matsumoto
H. Office of Representative District 46, Amy Perruso
I. Office of Representative District 37, Trish La Chica
J. State Department of Transportation – Casey Abe

VIII. APPROVAL OF BOARD MEETING MINUTES: November 19, 2024, Regular Meeting Minutes

IX. REPORTS

A. Patsy T. Mink Central Oahu Regional Park

B. Committees
a) Education – Stephen Melendrez/Anna Hudson
b) Military and Civil Defense – Keith Tamashiro
c) Parks and Recreation – Susan Miyamoto
d) Planning, Permitting and Zoning – Stanton Oishi & Dana Agader
e) Transportation – Dean Hazama
f) Recognition and Service Awards – Alice Rogers

X. ANNOUNCEMENTS

A. The next Mililani Mauka/Launani Valley Neighborhood Board will be held on Tuesday, February 18, 2025, at 7:00 p.m. at Mililani Mauka Elementary School and via WebEx.

XI. ADJOURNMENT

A map of the subdistrict boundaries is at – https://www.honolulu.gov/rep/site/nco/maps/35Mililani-Mauka.jpg.

Capital Improvement Projects (CIP) and Budget Planning. Suggestions for projects in the Neighborhood Board district and adjacent areas are welcome at any time to prepare for planning actions and the next fiscal year.

A mailing list is maintained for interested persons and agencies to receive this board's agenda and minutes. Additions, corrections, and deletions to the mailing list may be directed to the Neighborhood Commission Office (NCO) at Kapālama Hale, 925 Dillingham Boulevard, Suite 160, Honolulu, HI 96817, by telephone on (808) 768-3710, fax (808) 768-3711, or e-mailing nco@honolulu.gov. Agenda documents and minutes are also available online at http://www.honolulu.gov/nco/boards.html

All written testimony must be received in the Neighborhood Commission Office 48 hours prior to the meeting. If within 48 hours of the meeting, written and/or oral testimony may be submitted directly to the Board at the meeting. If submitting written testimony, please note the Board and agenda item(s) your testimony concerns. Send to: Neighborhood Commission Office, 925 Dillingham Boulevard, Suite 160, Honolulu, HI 96817, fax (808) 768-3711, or email nbtestimony@honolulu.gov.

R.1. If you need an auxiliary aid/service or other accommodation due to a disability or an interpreter for a language other than English, please call the Neighborhood Commission Office at (808) 768-3710 between 8:00 a.m. and 4:00 p.m. or send an email to nco@honolulu.gov at least three (3) business days before the scheduled meeting. It may not be possible to fulfill requests received after this date.

MILILANI MAUKA / LAUNANI VALLEY NEIGHBORHOOD BOARD NO. 35

NEIGHBORHOOD COMMISSION | 925 DILLINGHAM BOULEVARD SUITE 160 | HONOLULU, HAWAII, 96817
PHONE (808) 768-3710 | FAX (808) 768-3711 | INTERNET: https://www8.honolulu.gov/nco/

REGULAR MEETING WRITTEN SUMMARY FOR VIDEO RECORD
TUESDAY, JANUARY 21, 2025 at 7:00 P.M.
MILILANI MAUKA ELEMENTARY SCHOOL – 95-1111 MĀKAʻIKAʻI STREET, MILILANI, HI 96789
AND VIA WEBEX

Video recording of this meeting can be found at: https://www.youtube.com/watch?v=drPqD86Nsv0

Reports & other meeting materials can be found at:
https://drive.google.com/drive/folders/1zCauqWgTX4syd8vO3Ci5UCL_ePiRXlbE

I. **CALL TO ORDER – [0:00:14]**: 7:00 p.m.

Chair Dean I. Hazama called the meeting to order at 7:00 p.m.; **Quorum was established with eight (8) members present.** Note – This nine (9) member Board requires five (5) members to establish a quorum and to take official Board action.

Board Members Present: Dana Agader, Dean Hazama, Anna Hudson, Theresa Kuehu, Steven Melendrez, Susan Miyamoto, Stanton Oishi (logged on 7:06 p.m.), Alice Rogers and Keith Tamashiro.

Board Members Absent: None.

Guests: Firefighter R. Canotal (Honolulu Fire Department); Lieutenant Scott Vierra (Honolulu Police Department); Kathleen Elliott-Pahinui (Honolulu Board of Water Supply); Colonel Jarrod Melander (Military Representative); Melanie Martin (Governor Josh Green); Casey Abe (Department of Transportation); Nestor Garcia (Congressman Ed Case); Deputy Director Carrie Castle (Mayor Rick Blangiardi); Councilmember Val Okimoto, Pua Smith-Kauhane, Jocelyn Roberts (Councilmember Val Okimoto's Office); Councilmember Matt Weyer, Kelly Anaya (Councilmember Matt Weyer's Office); Representative Lauren Matsumoto; Representative Amy Perruso, Annie Kuehu (Representative Amy Perruso's Office); Representative Trish La Chica; Charles Miller (Senator Donovan Dela Cruz's Office); Boy Scout Troop 664; Rick Bloxson, Nathan Hokama, Rita Kama-Kimura, Martin Ortogero (Residents); Zhoydell Magaoay (Neighborhood Commission Office). **Note: Name was not included if not legible. There were 40 total participants.**

II. **PRESENTATION OF THE COLORS & PLEDGE OF ALLEGIANCE** – [0:00:25]: Boy Scout Troop 664.

III. **MEETING DECORUM** – [0:02:01]: Vice Chair Keith Tamashiro recited the rules of speaking.

IV. **MONTHLY REPORTS** – [0:02:49]

Honolulu Fire Department (HFD) – [0:03:05]: Firefighter Canotal provided the monthly statistics for December 2024 and safety tips for electrical work.

- Report: https://drive.google.com/file/d/1AKQY3ekBLfQdml_OpeVCL-lTMbl9S6yZ/view?usp=drive_link

Questions, comments, and concerns followed – [0:04:07]

Honolulu Police Department (HPD) – [0:05:35]: Lieutenant Vierra reported the following statistics.
December 2024: There were two (2) assaults, one (1) burglary, and two (2) unauthorized entry to a motor vehicle (UEMV). Lieutenant Vierra provided safety tips when going to go out walking or riding a bike.

- HPD Data Dashboard: https://www.honolulupd.org/olddashboard2024/
- Crime Mapping: https://www.crimemapping.com/

Member Oishi logged on at 7:06 p.m. There were nine (9) members present.

Board of Water Supply (BWS) – [0:07:55]: Kathleen Elliott-Pahinui (Public Information Officer) provided the report and highlighted the following: no water main breaks in December 2024; BWS is offering home audits and if interested to call 808-292-4672.

- BWS Report: https://drive.google.com/file/d/1mcvlyTon6vTUvt_wbkZKVK9Uhwj5AVFG/view?usp=drive_link

Military Representative Report – [0:09:06]: Colonel Melander reported the following: training advisories in the East Range area for the month of January 2025 have been published (expect increased helicopter traffic and blank fire activities); full

scale training through Kolekole Pass, in partner with the State and City Emergency Management officials; US Army Garrison Hawaii is hosting a Hiring Fair on Tuesday, February 18, 2025 at Helemano Military Reservation Gym from 8:30 a.m. to 2:00 p.m.

- Training Advisory: https://drive.google.com/file/d/1loegwmFpqvJGc7tFbcZYPKPO6l1kQDYm/view?usp=drive_link
- Community Concern Hotline: (808) 787-1528

Questions, comments, and concerns followed – [0:11:41]

V. BOARD BUSINESS – [0:12:12]

Update on Affordable Housing Project at Mililani High School – [0:12:28]: Cherri Nakamura provided an update on the project. Nakamura noted that the project was awarded to Pacific Housing Assistance Corporation, in which Pacific Housing identified a potential site for the teacher workforce housing located on the upper campus of Mililani High School on the corner of Hookelewaa Street and Maheula Parkway. Nakamura noted that they held several community meetings and floated the idea of moving the project to an alternative site located on the lower campus which received positive responses. Nakamura also noted that they still want to give the community opportunity to respond to the alternative location and get feedback by Friday, February 7, 2025. The developer is planning to do environmental assessments and development agreements. Start of construction is tentatively scheduled sometime in 2027.

- Project Map: https://drive.google.com/file/d/1xuDJYKQbpE25mq-O0IhVVwNQ13rW59U2/view?usp=drive_link

Questions, comments, and concerns followed – [0:15:15]

Presentation on Proposed Sewer Rate Increases – [0:21:45]: Roger Babcock (Director of City Department of Environmental Services) presented information on the proposed adjustments for sewer fees that are required for wastewater operations and maintenance (O&M) and the Capital Improvement Program (CIP). The CIP includes many other projects to repair and upgrade facilities to meet regulatory requirements and to continue preparing the island's critical infrastructure for climate change/sea level rise. ENV's efficient spending allowed the island to keep sewer fees unchanged since 2016. It is proposed for total sewer fee revenues to increase 9% per year for six years beginning July 1, 2025, and will then increase by 8%, 7%, and 5% each year from July 1, 2031. Mr. Babcock reviewed the table provided on the flyer. ENV will be adding a new program to help with affordability and equity called the Customer Assistance for Residential Environmental Services (CARES). Customers can qualify based on their area median income, and will be eligible for a $20 to $25 credit on their monthly fixed fee.

- Website: https://www8.honolulu.gov/env/sewer-fee-rates/
- Sewer Fees Info: https://drive.google.com/file/d/180mXLlVqIa9Vn8Vi_nZLTbMp7oohFW0t/view?usp=drive_link

Questions, comments, and concerns followed – [0:38:33]

VI. RESIDENT/COMMUNITY CONCERNS – [1:04:33]: There were no concerns.

VII. ELECTED OFFICIALS – [1:04:44]

Office of Governor Josh Green – [1:04:51]: Melanie Martin provided the report and highlighted the following: Governor's State of State Address initiatives; fireworks task force; and Maui recovery efforts.

- Newsletter: https://drive.google.com/file/d/112TarQSUlUn5eGrJOn-dV5ZXbezM31bb/view?usp=drive_link

Questions, comments, and concerns followed – [1:09:57]

Office of Congressman Ed Case – [1:10:55]: Nestor Garcia provided the report and highlighted the following: Congressman Case's talk stories town halls in Mililani High School, Wednesday, January 29, 2025; 6:30 p.m. to 8:00 p.m.; and affordability and high cost of living - Affordable Shipping for All Act.

- Report: https://drive.google.com/file/d/167JaK1s0OCA6JYN9DFM-8kOGZq8bQ9wx/view?usp=drive_link

Office of Mayor Rick Blangiardi – [1:15:52]: Deputy Director Carrie Castle (Department of Budget and Fiscal Services) provided the report and highlighted the following: partnering with the State on providing affordable housing; improving homelessness resources and housing; second segment of the Skyline expected to open sometime in the fourth quarter of 2025; and improving the Department of Planning & Permitting (DPP). Deputy Castle provided responses to concerns raised at the previous meeting.

- Newsletter: https://drive.google.com/file/d/1ING6cGKgg2mlO9yFCO8qE9t7NBUCeYrg/view?usp=drive_link

Questions, comments, and concerns followed – [1:21:30]

Office of Councilmember District 8, Val Okimoto – [1:30:41]: Councilmember Okimoto provided her report and highlighted the following: Council inauguration; legislative updates regarding Bill 52 (electric bicycles); fireworks enforcement briefing; community events she has attended; and community concerns.

- Newsletter: https://drive.google.com/file/d/1d77sbTr8EwqYdpHF2i6hNfzTOiqnIjrP/view?usp=drive_link
- Real Property Tax https://realproperty.honolulu.gov/
- Complete Streets – Sign up for quarterly reports https://www8.honolulu.gov/completestreets/
- Feral Chickens https://www8.honolulu.gov/csd/feral-chickens/

Questions, comments, and concerns followed – [1:37:23]

Office of Councilmember District 2, Matt Weyer – [1:47:05]: Councilmember Weyer provided his report and highlighted the following: proposed landfill site; Committee assignments – Chair of the Committee on Housing, Sustainability, Economy & Health; and legislative updates regarding the proposed sewer fee increase, Resolution 25-003 (opposing the proposed landfill site), Bill 64 (expanding City's down payment assistance program), Bill 61, Bill 51, and Bill 59.
Newsletter: https://drive.google.com/file/d/1kKLVutRYBvYtlMI0MqZfLc5ux8cM_oh4/view?usp=drive_link

Questions, comments, and concerns followed – [1:58:20]

Office of Senator District 17, Donovan Dela Cruz – [2:02:43]: Charles Miller provided the report and highlighted the following: responses regarding the Mililani Tech Park; funding released for the Mililani Ike Elementary School play court; and Senate Bill 1100 (establishment of new Deputy Director for Biosecurity).

Office of Representative District 38, Lauren Matsumoto – [2:05:23]: Representative Matsumoto provided her report and highlighted the following: legislative calendar; six (6) legislative issues; emceeing the Mililani Band Orchestra concert; capital improvement project (CIP) money released from the Governor; and resources & activities – Theater for Youth free performance on Wednesday, January 29, 2025 from 3:00 p.m.

- Newsletter: https://drive.google.com/file/d/16eQWaZVqiuXULLFYtdx3MJRO3jieZPVW/view?usp=drive_link
- Legislative Calendar: https://drive.google.com/file/d/1vqKQQTo9tTkRNggh7UTFGpcjAu6k2Mv2/view?usp=drive_link

Questions, comments, and concerns followed – [2:09:25]

Office of Representative District 46, Amy Perruso – [2:11:39]: Representative Perruso provided her report and highlighted the following: meeting in Wahiawa regarding the landfill; introducing legislation that will make it illegal to site a landfill over an aquafer; press conference on Tuesday, January 28, 2025, at 11:00 a.m.; and introduced intern, Annie Kuehu.

- Website: https://www.representativeamyperruso.com/

Questions, comments, and concerns followed – [2:15:11]

Office of Representative District 37, Trish La Chica – [2:16:13]: Representative La Chica provided her report and highlighted the following: leadership role in the House of Representative - Assistant Majority Floor Leader, Vice Chair of Education Committee; community survey; condo & home insurance meeting in December 2024; legislative bill package; homeless encampment in Kipapa Gulch; and election banners.

- Newsletter: https://drive.google.com/file/d/15mL1Y-xefweGBvbrLwRUe7YilbJYFxZd/view?usp=drive_link

Questions, comments, and concerns followed – [2:21:57]

State Department of Transportation, Casey Abe – [2:22:43]: Casey provided his report and highlighted the following: emergency exit update; flashing beacon at the crossing off the Mililani Mauka offramp; maintenance of overgrowth along the mauka side of H2 freeway; and graffiti on destination signs along the H2 freeway.

Questions, comments, and concerns followed – [2:24:08]

VIII. APPROVAL OF BOARD MEETING MINUTES – [2:26:36]

Tuesday, November 19, 2024, Regular Meeting Written Summary for Video Record – [2:26:36]: **Hearing no corrections, the Tuesday, November 19, 2024 Regular Meeting Written Summary for Video Record were approved as written; 9-**

0-0 (**Aye**: Agader, Hazama, Hudson, Kuehu, Melendrez, Miyamoto, Oishi, Rogers, Tamashiro; **Nay**: None; **Abstain**: None) – [2:26:56].

IX. REPORTS – [2:26:57]

Patsy T. Mink Central Oahu Regional Park – [2:27:02]: No report.

Committees – Education – [2:27:04]: Committee Co-Chair Hudson reported and highlighted the following: Mililani ʻIke Elementary School – recognition of their military partners; Character Counts Fair; Mililani Mauka Elementary School – covered outdoor play court is open; Wheeler Elementary School – new Principal, Kristin L. Walje, Papa Johns fundraiser; Leilehua High School – Mules BirthdayBash on Saturday, January 25, 2025, at 6:00 p.m. Committee Chair Melendrez reported and highlighted the following: Mililani Middle School – administration, school stats of teacher-student ratio, Hawaii testing scores, high interest programs, reading program, and announced School Community Council meets every second Tuesdays at 6:00 p.m., and the PTSO at 5:00 p.m.

- Report (Hudson): https://drive.google.com/file/d/1ezLZYifTNowYp74b7Zn21xogLdQ14qEn/view?usp=drive_link
- Report (Melendrez): https://drive.google.com/file/d/1_Irw_xqKvqUoSxSsUMwncigHiliX4PFC/view?usp=drive_link

Committees – Military and Civil Defense – [2:33:26]: No report.

Committees – Parks and Recreation – [2:33:30]: No report.

Committees – Planning, Permitting and Zoning – [2:33:32]: No report.

Committees – Transportation – [2:33:36]: No report.

Committees – Recognition and Service Awards – [2:33:40]: No report.

X. ANNOUNCEMENTS – [2:33:44]

2025 Neighborhood Board Election – [2:33:50]: Chair Hazama announced that the candidate filing deadline is Friday, February 21, 2025 for the 2025 to 2027 term.

Next Meeting – [2:34:12]: The next regular meeting is scheduled for Tuesday, February 18, 2025 at 7:00 p.m. at the Mililani Mauka Elementary School and via WebEx.

Video Recordings: Videotapes of board meetings are scheduled to be shown on 'Olelo Channel 49 on the 1st Saturday of the month at 6:00 p.m., and 2nd and 4th Fridays of the month at 1:00 p.m. Videotapes of board meetings are also available on YouTube at: https://www.youtube.com/@NeighborhoodCommissionOffice

XI. ADJOURNMENT – [2:34:25]: The meeting was adjourned at 9:34 p.m.

Submitted by: Zhoydell Magaoay, Neighborhood Assistant, NCO
Reviewed by: Dylan Buck, Community Relations Specialist, NCO
Finalized by: Secretary Susan Miyamoto and Chair Dean Hazama

MILILANI MAUKA/ LAUNANI VALLEY NEIGHBORHOOD BOARD NO. 35
c/o NEIGHBORHOOD COMMISSION • 925 DILLINGHAM BOULEVARD SUITE 160 • HONOLULU, HAWAII, 96817
TELEPHONE: (808) 768-3710 • FAX: (808) 768-3711 • INTERNET: https://www8.honolulu.gov/nco/

REGULAR MEETING AGENDA
TUESDAY, FEBRUARY 18, 2025, at 7:00 p.m.
MILILANI MAUKA ELEMENTARY SCHOOL
95-1111 MAKAIKAI STREET, MILILANI HI 96789 AND
VIA WEBEX

WebEx Link: https://cchnl.webex.com/cchnl/j.php?MTID=mda311055081761002939 0c6f72decace
Meeting number / Access Code: 2490 158 5754
Password: NB35 (6235 from phones and video systems)
Join by phone: +1-408-418-9388 (United States Toll)

Meeting Materials Link: https://drive.google.com/drive/folders/1zCauqWgTX4syd8vO3Ci5UCL_ePiRXlbE
Video Recordings: http://www.youtube.com/@NeighborhoodCommissionOffice

Rules of Speaking: Anyone wishing to speak is asked to raise their hand, and when recognized by the Chair, to address comments to the Chair. All dialogue at the meeting will be conducted by use of the microphone. Those joining the meeting on WebEx are reminded to mute their speakers until they wish to be recognized by the Chair. Anyone not following these rules will be ruled out of order by the Chair. Those providing Presentations to the Board are encouraged to do so via a PowerPoint presentation, with a projector and provide handouts for the board and the community. The public concerns and comments are limited to three (3) minutes each. Please silence all electronic devices.

Note: The Board may take action on any agenda item. As required by the State Sunshine Law (HRS 92), specific issues not noted on this agenda cannot be voted on, unless allowed for under HRS 92. A two-thirds (2/3) vote (5) of this 9- member Board is required to meet quorum requirements.

I. CALL TO ORDER: Chair Dean I. Hazama

II. PRESENTATION OF THE COLORS & PLEDGE OF ALLEGIANCE: Scouts BSA Troup 664

III. MEETING DECORUM: Vice Chair Keith Tamashiro

IV. MONTHLY REPORTS

A. Honolulu Fire Department (HFD)

B. Honolulu Police Department (HPD)

C. Board of Water Supply (BWS)

D. Military Representative Report

V. BOARD BUSINESS

A. Update on Affordable Housing Project at Mililani High School – Cherri Nakamura (HISFA)

B. Update on Memorandum of Understanding (MOU) between DOE and C&C Parks on Community use of new Mililani Middle School Parking Lot.

VI. RESIDENT/COMMUNITY CONCERNS: Any community member can come forward and express any comment or concern within decorum. Please, limit your comments to three (3) minutes each per issue for items not on the agenda.

VII. ELECTED OFFICIALS

A. Office of Governor Josh Green – Melanie Martin

B. Office of Congressman Ed Case – Nestor Garcia

C. Office of the Mayor Rick Blangiardi – Carrie Castle

D. Office of Councilmember District 8, Val Okimoto

E. Office of Councilmember District 2, Matt Weyer

F. Office of Senator District 17, Donovan Dela Cruz

G. Office of Representative District 38, Lauren Matsumoto

H. Office of Representative District 46, Amy Perruso

I. Office of Representative District 37, Trish La Chica

J. State Department of Transportation – Casey Abe

VIII. APPROVAL OF BOARD MEETING MINUTES: January 21, 2025, Regular Meeting Minutes

IX. REPORTS

A. Patsy T. Mink Central Oahu Regional Park

B. Committees

a) Education – Steven Melendrez/Anna Hudson

b) Military and Civil Defense – Keith Tamashiro

c) Parks and Recreation – Susan Miyamoto

d) Planning, Permitting and Zoning – Stanton Oishi & Dana Agader

e) Transportation – Dean Hazama

f) Recognition and Service Awards – Alice Rogers

X. ANNOUNCEMENTS

A. The next Mililani Mauka/Launani Valley Neighborhood Board will be in recess in March. Our next meeting held on Tuesday, April 15, 2025, at 7:00 p.m. at Mililani Mauka Elementary School and via WebEx.

B. Neighborhood Board Elections: Deadline for Voter and Candidate Registration is Friday, February 21, 2025. Please call the NCO office for any assistance at 808-768-3710 or for more information, please visit https://web5.hnl.info/nbe

XI. ADJOURNMENT

A map of the subdistrict boundaries is at – https://www8.honolulu.gov/nco/boards-and-sub-district-boundary-descriptions/

Capital Improvement Projects (CIP) and Budget Planning. Suggestions for projects in the Neighborhood Board district and adjacent areas are welcome at any time to prepare for planning actions and the next fiscal year.

A mailing list is maintained for interested persons and agencies to receive this board's agenda and minutes. Additions, corrections, and deletions to the mailing list may be directed to the Neighborhood Commission Office (NCO) at Kapālama Hale, 925 Dillingham Boulevard, Suite 160, Honolulu, HI 96817, by telephone on (808) 768-3710, fax (808) 768-3711, or e-mailing nco@honolulu.gov Agenda documents and minutes are also available online at https://www8.honolulu.gov/nco/

All written testimony must be received in the Neighborhood Commission Office 48 hours prior to the meeting. If within 48 hours of the meeting, written and/or oral testimony may be submitted directly to the Board at the meeting. If submitting written testimony, please note the Board and agenda item(s) your testimony concerns. Send to: Neighborhood Commission Office, 925 Dillingham Boulevard, Suite 160, Honolulu, HI 96817, fax (808) 768-3711, or email nbtestimony@honolulu.gov

If you need an auxiliary aid/service or other accommodation due to a disability or an interpreter for a language other than English, please call the Neighborhood Commission Office at (808) 768-3710 between 8:00 a.m. and 4:00 p.m. or send an email to nco@honolulu.gov at least three (3) business days before the scheduled meeting. It may not be possible to fulfill requests received after this date.

MILILANI MAUKA / LAUNANI VALLEY NEIGHBORHOOD BOARD NO. 35

NEIGHBORHOOD COMMISSION | 925 DILLINGHAM BOULEVARD SUITE 160 | HONOLULU, HAWAII, 96817
PHONE (808) 768-3710 | FAX (808) 768-3711 | INTERNET: https://www8.honolulu.gov/nco/

REGULAR MEETING WRITTEN SUMMARY FOR VIDEO RECORD
TUESDAY, FEBRUARY 18, 2025 at 7:00 P.M.
MILILANI MAUKA ELEMENTARY SCHOOL – 95-**1111 MĀKAʻIKAʻI STREET, MILILANI, HI 96789**
AND VIA WEBEX

Video recording of this meeting can be found at: https://www.youtube.com/watch?v=lplxuwusr0Y

Reports & other meeting materials can be found at:
https://drive.google.com/drive/folders/1zCauqWgTX4syd8vO3Ci5UCL_ePiRXlbE

I. CALL TO ORDER – [0:00:38]: 7:00 p.m.

Chair Dean I. Hazama called the meeting to order at 7:00 p.m.; Quorum was established with seven (7) members present. Note – This nine (9) member Board requires five (5) members to establish a quorum and to take official Board action.

Board Members Present: Dean Hazama, Anna Hudson, Theresa Kuehu, Steven Melendrez, Susan Miyamoto, Alice Rogers and Keith Tamashiro.

Board Members Absent: Dana Agader and Stanton Oishi.

Guests: Firefighter C. Clingan (Honolulu Fire Department); Lieutenant Navares (Honolulu Police Department); Colonel Jarrod Melander (Military Representative); Melanie Martin (Governor Josh Green); Deputy Director Carrie Castle (Mayor Rick Blangiardi); Jame Schaedel (Councilmember Val Okimoto's Office); Kelly Anaya (Councilmember Matt Weyer's Office); Representative Lauren Matsumoto; Representative Amy Perruso (Representative Amy Perruso's Office); Representative Trish La Chica; Charles Miller (Senator Donovan Dela Cruz's Office); Scout BSA Troop 664; Rick Bloxson, Martin Ortogero, Annie K. (Residents); Camilia Epa Gomes (Neighborhood Commission Office). Note: Name was not included if not legible. There were 26 total participants.

II. PRESENTATION OF THE COLORS & PLEDGE OF ALLEGIANCE – [0:00:45]: Scout BSA Troop 664.

[0:02:18] – Chair Hazama shared a quick announcement that the Board will be in recess in March 2025.

III. MEETING DECORUM – [0:02:26]: Vice Chair Keith Tamashiro recited the rules of speaking.

IV. MONTHLY REPORTS – [0:03:23]

Honolulu Fire Department (HFD) – [0:03:24]: Firefighter Clingan provided the monthly statistics for January 2025 and safety tips regarding power outage preparedness.

- Report: https://drive.google.com/file/d/1JpIHdDE6BxQhKkmI6EawuP9KFmMvIBqN/view?usp=drive_link

Honolulu Police Department (HPD) – [0:05:09]: No representative present.

- HPD Data Dashboard: https://www.honolulupd.org/olddashboard2024/
- Crime Mapping: https://www.crimemapping.com/

Board of Water Supply (BWS) – [0:05:18]: No representative present.

Military Representative Report – [0:05:23]: Colonel Melander reported the following: Artillery and mortar live fire training on Schofield Barracks will be through February 18-23, 2025 and February 24-28, 2025. There will be day and evening demolitions training on Schofield Barracks from February 18-21, 2025. The National Vietnam Veterans Day Parade will take place on March 29, 2025. The opening ceremony will begin at 4:30 p.m. at Fort Derussy and the parade will begin at 6:00 p.m. along King Kalakaua Avenue in Waikiki. The next job fair is on Tuesday, April 22, 2025 at Aliamanu Military Reservation Gym from 8:30 a.m. to 2:00 p.m.

- Training Advisory: https://drive.google.com/file/d/16q3A1aQjshJcPnHyx_t6IUusV2RODyU5/view?usp=drive_link
- For more information on the job fair, go to: https://www.himwr.com
- Community Concern Hotline: (808) 787-1528

Questions, comments, and concerns followed – [0:07:26]

V. BOARD BUSINESS – [0:08:29]

Update on Affordable Housing Project at Mililani High School – [0:08:28]: Chair Hazama shared that the presentation will be deferred until the presenter arrives.

Update on Memorandum of Understanding (MOU) between Dept. of Education and City Parks and Recreation on Community Use of New Mililani Middle School Parking Lot – [0:08:35]: Chair Hazama shared this presentation will not be ready at this time and will be deferred to a future Board meeting.

VI. RESIDENT/COMMUNITY CONCERNS – [0:08:49]

Private Company Signs – [0:09:00] Member Kuehu brought to attention that it appears the community association for Launani Valley that is now under a new on-site property management company (Hawaiiana Management) has hung up 3 large informational signs using C&C street signs to hold up their banners along Wikaʻo Street. She mentioned that she spoke on the phone with the site manager who insisted that it's fine. She also reached out to a City Department of Transportation Services rep about the issue and the rep also confirmed that it wasn't allowed. Member Kuehu would like City Department of Planning and Permitting to also look into the issue and get into contact with the new property management team to address the issue.

Hearing no objections, Chair Hazama took the agenda out of order to hear item IV.B. Honolulu Police Department at this time.

IV. MONTHLY REPORTS – [0:11:00]

Honolulu Police Department (HPD) – [0:11:11]: HPD Lieutenant Navares provided the monthly statistics for January 2025 and safety tip in regards to driving safely. Robert Towne is the new HPD major assigned to the district, who has plans to coordinate a community meet and greet in the near future. HPD Acting Major Gonsalves will be returning to his Captain responsibilities.

Questions, comments, and concerns followed – [0:13:01]

V. ELECTED OFFICIALS – [0:15:54]

Office of Governor Josh Green – [0:16:00]: Melanie Martin provided the report and highlighted the following: Governor Green recently issued executive order 2502 to launch a robust recruitment initiative called Operations Hire Hawaii to assist displaced federal employees and other similarly impacted individuals who have the skill sets that the State is looking for; Attorney General Ann E. Lopez joined 13 other states in suing President Trump to invalidate his executive order which terminates birthright citizenship; the Department of Law Enforcement is warning residents that there are Sheriff impersonators calling individual residents and posing as deputy sheriffs and explaining that there is a warrant out on them because they fail to appear in court. A follow-up response was provided on a question raised at last month's Board meeting.

- Newsletter: https://drive.google.com/file/d/1s_dst14I-i5hAerQtKW6yxkrymEVwkMv/view?usp=drive_link

Questions, comments, and concerns followed – [0:19:02]

Office of Congressman Ed Case – [0:26:36]: No representative.

Office of Mayor Rick Blangiardi – [0:20:44]: Carrie Castle provided the report and highlighted the following: Mayor Blangiardi signed Bill 52 (relating to electric bicycles); the Mayor will be submitting the City's budget to City Council at the end of February 2025 and various City departments will be presenting their budget briefings to the City Council members on the second week of March 2025; and follow-up responses were provided for questions raised at the last Board meeting.

- Newsletter: https://drive.google.com/file/d/1icuF-YhK-PDLAKtK2a4Ms9aY_S_oNPZp/view?usp=drive_link

Questions, comments, and concerns followed – [0:26:18]

Office of Councilmember District 8, Val Okimoto – [0:30:56]: Jame Schaedel provided the report and highlighted the following: confirmation hearings for City Department Officials; legislative updates regarding Bill 52 (relating to electric bicycles).

Office of Councilmember District 2, Matt Weyer – [0:33:33]: Kelly Anaya provided the report and highlighted the following: the City Council honored Captain Clifford Chillingworth on a lifetime of dedication to ocean safety and serving the community as a lifeguard; Councilmember Weyer is closely monitoring potential federal funding changes; follow-up responses were provided for questions raised at last month's Board meeting. Legislative updates were provided for Bill 52 (relating to the climate resiliency fund), Bill 18 (relating to plastic), Bill 61 (relating to wheelies), House Bill 969 (relating to waste or disposal facilties), and Senate Bill 438 (relating to waste disposal facilities).
Newsletter: https://drive.google.com/file/d/1BHBnLBEdhkBORgXoY5ZsaNiaAJ1rVDeq/view?usp=drive_link

Questions, comments, and concerns followed – [0:37:08]

Office of Senator District 17, Donovan Dela Cruz – [0:38:36]: Charles Miller provided the report and highlighted the following: legislative update; and Senator Dela Cruz attended Mililani Mauka Elementary School Art Day.

Office of Representative District 38, Lauren Matsumoto – [0:41:10]: Representative Matsumoto provided her report and highlighted the following: updates on Mililani Emergency Road; Aloha Mākena Endowed Scholarship; State Capitol Talk and Tour on Thursday, March 20, 2025 from 10:00 a.m. to 12:30 p.m.; Legislative Update Town Hall on Thursday, April 10, 2025 from 6:00 p.m. to 7:30 p.m. at Mililani Mauka Elementary School Cafeteria; shared details on the legislative newsletter that provides information on her 2025 bill package and survey results.

- Legislative Update Newsletter: https://drive.google.com/file/d/1rzmsQRHokrHhSLYphk5oEB5wehJ5BN7V/view?usp=drive_link
- Monthly Newsletter: https://drive.google.com/file/d/1_OXE2mVQeSbkN2fUQvtL6XPauJBh4D-b/view?usp=drive_link

Questions, comments, and concerns followed – [0:48:07]

Office of Representative District 46, Amy Perruso – [0:50:05]: Representative Perruso provided her report and highlighted the following: legislative update on House Bill 969 (relating to waste or disposal facilities); and preparing for possible federal budgets cuts.

- Newsletter: https://drive.google.com/file/d/10Y3VZLy5ZB7KXghVs47Dypo8YzZCPlfe/view?usp=drive_link
- Website: https://www.representativeamyperruso.com/

Office of Representative District 37, Trish La Chica – [0:52:44]: Representative La Chica provided her report and highlighted the following: Legislative updates for the House Committee on Education; initiatives to expand public Pre-K facilities in the State; universal free school meals; bill updates; and updates provided from a meeting regarding the Mililani Middle School Parking Lot MOU.

- Newsletter: https://drive.google.com/file/d/1mv8X2D4aJUbml7bhTBrelfF5j_86S4cM/view?usp=drive_link

Questions, comments, and concerns followed – [0:59:55]

State Department of Transportation, Casey Abe – [1:04:45]: Casey Abe provided his report and highlighted the following: there is a landscape contract to complete the cutting of the overgrowth along both sides of H2 freeway by Kipapa Stream to the Mililani interchange; overgrowth of trees on H2 freeway from Mililani interchange to the Leilehua golf course road overpass needs to be trimmed to prevent blocking road signage and intruding the shoulder lane; follow-up response on graffiti concerns mentioned at the last Board meeting; and updates on the Mililani Mauka emergency access road.

- For questions or concerns, please attach photos or google map location to: casey.abe@hawaii.gov

Questions, comments, and concerns followed – [1:07:10]

Hearing no objections, Chair Hazama took the agenda out of order to hear item V.A. Update on Affordable Housing Project at Mililani High School this time.

V. BOARD BUSINESS – [1:09:50]

Update on Affordable Housing Project at Mililani High School – [1:09:50]: Sherri Nakamura (Hawaii School Facilities Authority Community Liaison) provided an update on the status of the project with a written statement. Since September 2024, Hawaii School Facilities Authority (HISFA) has conducted and attended approximately 12 community meetings, including the Mililani Mauka Neighborhood Board meeting. As a result, from receiving feedback from community members, teachers, and students of the school, HISFA and Pacific Housing Assistance Corporation (developer) finalized the location of the project to be at Mililani High School's lower campus adjacent to the athletic facilities. HISFA will continue to update

the community periodically through neighborhood Board meetings, Mililani High School community council meetings, and on the HISFA website.

Questions, comments, and concerns followed – [1:12:36]

VIII. APPROVAL OF BOARD MEETING MINUTES – [1:16:26]

Tuesday, January 21, 2025, Regular Meeting Written Summary for Video Record – [1:16:26]: Hearing no corrections, the Tuesday, January 21, 2025 Regular Meeting Written Summary for Video Record were approved as written; 7-0-0 (Aye: Hazama, Hudson, Kuehu, Melendrez, Miyamoto, Rogers, Tamashiro; Nay: None; Abstain: None) – [1:16:49].

IX. REPORTS – [1:16:50]

Patsy T. Mink Central Oahu Regional Park – [1:16:50]: No report.

Committees – Education – [1:17:00]: Committee Co-Chair Hudson reported and highlighted the following: Mililani 'Ike Elementary School – raising awareness of the school's new crosswalk and requesting drivers to slow down on Meheula Parkway; Valentine's Day Card for Institute of Human Services (IHS); National History Day; Mililani Mauka Elementary School (MMES) – Principal Shimabukuro thanked the MMES parents and guardians for helping keep Makaikai St. clear of traffic prior to the end of the school day; Wheeler Elementary School – recognized for creating a safe and welcoming environment for incoming military-dependent and transitioning students enrolling at their campus; Leilehua High School – will have a ACT testing day on Tuesday, February 25, 2025 from 8:15 a.m. to 2:00 p.m.Committee Chair Melendrez reported and highlighted the following: Mililani Middle School – administration, free high interest programs for students, and announced School Community Council meets every second Tuesdays at 6:00 p.m., and the PTSO at 5:00 p.m. at the administrative office conference room, benefits of the school's library read me and log reading progress, and upcoming important dates on the school's year calendar.

- Report (Hudson): https://drive.google.com/file/d/1Tk_c5dNJkiXD7xK2PRBxpph63qxDkw2a/view?usp=drive_link
- Report (Melendrez): https://drive.google.com/file/d/1nJdrIVLUxzirvwA0YPsARvKHO60I6Zcq/view?usp=drive_link

Committees – Military and Civil Defense – [1:23:54]: No report.

Committees – Parks and Recreation – [1:23:55]: No report.

Committees – Planning, Permitting and Zoning – [1:23:58]: No report.

Committees – Transportation – [1:23:59]: No report.

Committees – Recognition and Service Awards – [1:24:00]: No report.

X. ANNOUNCEMENTS – [1:24:05]

Next Meeting – [1:24:09]: The Mililani Mauka/Launani Valley Neighborhood Board will be in recess in March. The next regular meeting is scheduled for Tuesday, April 15, 2025 at 7:00 p.m. at the Mililani Mauka Elementary School and via WebEx.

2025 Neighborhood Board Election – [1:24:22]: Chair Hazama announced the deadline for voter and candidate registration is Friday, February 21, 2025 for the 2025 to 2027 term.

Video Recordings: Videotapes of board meetings are scheduled to be shown on 'Olelo Channel 49 on the 1st Saturday of the month at 6:00 p.m., and 2nd and 4th Fridays of the month at 1:00 p.m. Videotapes of board meetings are also available on YouTube at: https://www.youtube.com/@NeighborhoodCommissionOffice

XI. ADJOURNMENT – [1:24:42]: The meeting was adjourned at 8:24 p.m.

Submitted by: Camilia Epa Gomes, Neighborhood Assistant, NCO
Reviewed by: Dylan Buck, Community Relations Specialist, NCO
Finalized by: Susan Miyamoto, Secretary, Neighborhood Board No.35

MILILANI MAUKA/ LAUNANI VALLEY NEIGHBORHOOD BOARD NO. 35
NEIGHBORHOOD COMMISSION • 925 DILLINGHAM BOULEVARD SUITE 160 • HONOLULU, HAWAI'I, 96817
TELEPHONE: (808) 768-3710 • FAX: (808) 768-3711 • WEBSITE: https://www8.honolulu.gov/nco/

REGULAR MEETING AGENDA

TUESDAY, MAY 20, 2025, at 7:00 P.M.
MILILANI MAUKA ELEMENTARY SCHOOL
95-1111 MAKAIKAI STREET, MILILANI HI 96789 AND
VIA WEBEX

WebEx Link: https://cchnl.webex.com/cchnl/j.php?MTID=mda311055081761002939 0c6f72decace
Meeting number / Access Code: 2490 158 5754
Password: NB35 (6235 from phones and video systems)
Join by phone: +1-408-418-9388 (United States Toll)

Meeting Materials Link: https://drive.google.com/drive/folders/1zCauqWgTX4syd8vO3Ci5UCL_ePiRXlbE
Video Recordings: http://www.youtube.com/@NeighborhoodCommissionOffice

Rules of Speaking: Anyone wishing to speak is asked to raise their hand, and when recognized by the Chair, to address comments to the Chair. All dialogue at the meeting will be conducted by use of the microphone. Those joining the meeting on WebEx are reminded to mute their speakers until they wish to be recognized by the Chair. Anyone not following these rules will be ruled out of order by the Chair. Those providing Presentations to the Board are encouraged to do so via a PowerPoint presentation, with a projector and provide handouts for the board and the community. The public concerns and comments are limited to three (3) minutes each. Please silence all electronic devices.

Note: The Board may take action on any agenda item. As required by the State Sunshine Law (HRS 92), specific issues not noted on this agenda cannot be voted on, unless allowed for under HRS 92. A two-thirds (2/3) vote (5) of this 9- member Board is required to meet quorum requirements.

I. CALL TO ORDER: Chair Dean I. Hazama

II. PRESENTATION OF THE COLORS & PLEDGE OF ALLEGIANCE: Scouts BSA Troop 664

III. MEETING DECORUM: Vice Chair Keith Tamashiro

IV. MONTHLY REPORTS

A. Honolulu Fire Department (HFD)

B. Honolulu Police Department (HPD)

C. Board of Water Supply (BWS)

D. Military Representative Report

V. BOARD BUSINESS

A. Update on Affordable Housing Project at Mililani High School – Cherri Nakamura (HISFA)

B. Update on Memorandum of Understanding (MOU) between DOE and C&C Parks on Community use of new Mililani Middle School Parking Lot.

C. Presentation on the Early Eviction Mediation Program – Roberta Hickey (Mediation Center of the Pacific)

VI. RESIDENT/COMMUNITY CONCERNS: Any community member can come forward and express any comment or concern within decorum. Please, limit your comments to three (3) minutes each per issue for items not on the agenda.

VII. ELECTED OFFICIALS

A. Office of Governor Josh Green – Melanie Martin

B. Office of Congressman Ed Case – Nestor Garcia

C. Office of the Mayor Rick Blangiardi – Carrie Castle

D. Office of Councilmember District 8, Val Okimoto

E. Office of Councilmember District 2, Matt Weyer

F. Office of Senator District 17, Donovan Dela Cruz

G. Office of Representative District 38, Lauren Matsumoto

H. Office of Representative District 46, Amy Perruso

I. Office of Representative District 37, Trish La Chica

J. State Department of Transportation – Casey Abe

VIII. APPROVAL OF BOARD MEETING MINUTES: April 15, 2025, Regular Meeting Minutes

IX. REPORTS

A. Patsy T. Mink Central Oahu Regional Park

B. Committees

a) Education – Steven Melendrez/Anna Hudson

b) Military and Civil Defense – Keith Tamashiro

c) Parks and Recreation – Susan Miyamoto

d) Planning, Permitting and Zoning – Stanton Oishi & Dana Agader

e) Transportation – Dean Hazama

f) Recognition and Service Awards – Alice Rogers

X. ANNOUNCEMENTS

A. The next Mililani Mauka/Launani Valley Neighborhood Board will be held on Tuesday, June 17, 2025, at 7:00 p.m. at Mililani Mauka Elementary School and via WebEx.

B. Neighborhood Board Elections: Voting has ended on Friday, May 16, 2025. The deadline for mail-in ballots to be received is Friday, May 23, 2025 and the ballots must be postmarked no later than Friday, May 16, 2025. Please call the NCO office for any assistance at 808-768-3710 or for more information, please visit https://web5.hnl.info/nbe

XI. ADJOURNMENT

A map of the subdistrict boundaries is at – https://www8.honolulu.gov/nco/boards-and-sub-district-boundary-descriptions/

Capital Improvement Projects (CIP) and Budget Planning. Suggestions for projects in the Neighborhood Board district and adjacent areas are welcome at any time to prepare for planning actions and the next fiscal year.

A mailing list is maintained for interested persons and agencies to receive this board's agenda and minutes. Additions, corrections, and deletions to the mailing list may be directed to the Neighborhood Commission Office (NCO) at Kapālama Hale, 925 Dillingham Boulevard, Suite 160, Honolulu, HI 96817, by telephone on (808) 768-3710, fax (808) 768-3711, or e-mailing nco@honolulu.gov Agenda documents and minutes are also available online at https://www8.honolulu.gov/nco/

All written testimony must be received in the Neighborhood Commission Office 48 hours prior to the meeting. If within 48 hours of the meeting, written and/or oral testimony may be submitted directly to the Board at the meeting. If submitting written testimony, please note the Board and agenda item(s) your testimony concerns. Send to: Neighborhood Commission Office, 925 Dillingham Boulevard, Suite 160, Honolulu, HI 96817, fax (808) 768-3711, or email nbtestimony@honolulu.gov

If you need an auxiliary aid/service or other accommodation due to a disability or an interpreter for a language other than English, please call the Neighborhood Commission Office at (808) 768-3710 between 8:00 a.m. and 4:00 p.m. or send an email to nco@honolulu.gov at least three (3) business days before the scheduled meeting. It may not be possible to fulfill requests received after this date.

MILILANI MAUKA / LAUNANI VALLEY NEIGHBORHOOD BOARD NO. 35

NEIGHBORHOOD COMMISSION | 925 DILLINGHAM BOULEVARD SUITE 160 | HONOLULU, HAWAII, 96817
PHONE (808) 768-3710 | FAX (808) 768-3711 | INTERNET: https://www8.honolulu.gov/nco/

REGULAR MEETING WRITTEN SUMMARY FOR VIDEO RECORD
TUESDAY, MAY 20, 2025 at 7:00 P.M.
MILILANI MAUKA ELEMENTARY SCHOOL – 95-**1111 MĀKA'IKA'I STREET, MILILANI, HI 96789**
AND VIA WEBEX

Video recording of this meeting can be found at: https://www.youtube.com/watch?v=Rey88xXKV6Y

Reports & other meeting materials can be found at:
https://drive.google.com/drive/folders/1zCauqWgTX4syd8vO3Ci5UCL_ePiRXlbE

I. CALL TO ORDER – [0:00:12]: 7:00 p.m.

Chair Dean I. Hazama called the meeting to order at 7:00 p.m.; Quorum was established with seven (7) members present. Note – This nine (9) member Board requires five (5) members to establish a quorum and to take official Board action.

Board Members Present: Dean Hazama, Anna Hudson, Theresa Kuehu, Steven Melendrez, Susan Miyamoto, Alice Rogers and Keith Tamashiro.

Board Members Absent: Dana Agader and Stanton Oishi.

Guests: Firefighter R. Canotal and Captain B. Calhoun (Honolulu Fire Department); Lieutenant Scott Vierra (Honolulu Police Department); Colonel Jarrod Melander (Military Representative); Kathleen Pahinui (Board of Water Supply); Casey Abe (State Department of Transportation Highways Division); Melanie Martin (Governor Josh Green); Carrie Castle (Mayor Rick Blangiardi); Judi-Ann (Pua) Smith-Kauhane (Councilmember Val Okimoto's Office); Kelly Anaya (Councilmember Matt Weyer's Office); Representative Lauren Matsumoto (House District 38); Yvonne Yoro (Representative Amy Perruso's Office); Representative Trish La Chica (House District 37); Charles Miller (Senator Donovan Dela Cruz's Office); Scout BSA Troop 664; Roberta Hickey-Gomez (The Mediation Center of the Pacific); Heidi Weber, Mike Buck, Jocelyn Roberts, Rick Bloxson, Martin Ortogero, Megan, Val Tuiloma (Residents); Camilia Epa Gomes (Neighborhood Commission Office). Note: Name was not included if not legible. There were 21 total participants.

II. PRESENTATION OF THE COLORS & PLEDGE OF ALLEGIANCE – [0:00:22]: Scout BSA Troop 664.

III. MEETING DECORUM – [0:01:50]: Vice Chair Keith Tamashiro recited the rules of speaking.

IV. MONTHLY REPORTS – [0:02:42]

Honolulu Fire Department (HFD) – [0:02:42]: No representative at this time.

Honolulu Police Department (HPD) – [0:02:46]: Lieutenant Scott Vierra provided the monthly crime statistics for April 2025 and safety tips regarding vehicle safety. Non-emergency reports can also be submitted online instead of waiting on the phone.

- HPD Data Dashboard: Microsoft Power BI
- Crime Mapping: https://www.crimemapping.com/
- To submit non-emergency reports online please visit: https://www.frontlinepss.com/honolulupolice

Questions, comments, and concerns followed – [0:04:36]

Hearing no objections, Chair Hazama returned to Section IV. A. Honolulu Fire Department to hear their report at this time.

Honolulu Fire Department (HFD) – [0:05:28]: Captain B. Calhoun provided the monthly statistics for April 2025 and Firefighter R. Canotal provided the safety tips regarding home fire sprinklers.

- Report: https://drive.google.com/file/d/194YbmHRts98b8Uv5Qw2r5x0HmnDp8p1R/view?usp=drive_link

Questions, comments, and concerns followed – [0:07:00]

Board of Water Supply (BWS) – [0:07:46]: Kathleen Pahinui provided the report and shared there were no water main breaks and tips to conserve water during the summer season.

- Report: https://drive.google.com/file/d/1MNmpnha8N7Ify-G0Y5SqeKnavHmY6zsO/view?usp=drive_link

Questions, comments, and concerns followed – [0:08:47]

Military Representative Report – [0:09:53]: Colonel Melander reported the following: range and jungle tactics as well as small arms blank fire will continue at East Range May 21-26 and May 28-30; aviation training/air assault school will continue at East Range May 21-22 from 6:00 a.m. to 6:00 p.m.; live fire training for artillery, mortar, and demolitions will continue on Schofield Barracks during early morning hours and late evening hours May 30-31. The U.S Army will be celebrating its 250th birthday and invites the public to celebrate Army Community Day at Fort DeRussy on Thursday, June 12, 2025 from 10:00 a.m. to 3:00 p.m. The event will include interactive exhibits, equipment demonstrations, and meet-and-greets with soldiers. The Final Environmental Impact Statement (EIS) for proposed land retention on the island of Oʻahu for three training areas: Kahuku Training Area, Kawailoa-Poamoho Training Area, and Mākua Military Reservation. Once the final EIS is published, there will be a 30-day waiting period followed by the record of decision later this summer. The next job fair is on Tuesday, June 24, 2025 at Kapolei High School from 8:30 a.m. to 2:00 p.m.

- Training Advisory: https://drive.google.com/file/d/1E25m_oq5oxbJUW7LPn5C9SsKyV3CE3R8/view?usp=drive_link
- Press Release for Oʻahu Final EIS: https://drive.google.com/file/d/13f8lQrOQ5N5Sm0LxMRKCDkCCl-qDlUZy/view?usp=drive_link
- Oʻahu Final EIS Questions and Answers: https://drive.google.com/file/d/1KgFNkw_YvaqvGDtx7hgJgJHIVV3NSQXr/view?usp=drive_link
- For more information on the job fair, go to: https://www.himwr.com
- Community Concern Hotline: (808) 787-1528

Questions, comments, and concerns followed – [0:12:48]

V. BOARD BUSINESS – [0:13:38]

Update on Affordable Housing Project at Mililani High School – [0:13:38]: Chair Hazama informed everyone that he recieved an update from Cherri Nakamura (Hawaiʻi School Facility Authority Community Liason) that the Hawaiʻi State Legislature has passed House Bill (HB) 329 which approves a $2 million appropriation for the Mililani High School Teacher Housing Project and will be sent to Governor Green to sign. Chair Hazama informed everyone that HISFA will be back to provide updates to the Board in the near future.

Update on Memorandum of Understanding (MOU) between Dept. of Education and City Parks and Recreation on Community Use of New Mililani Middle School Parking Lot – [0:14:40]: Chair Hazama shared he received an update from the Department of Parks and Recreation that they are still currently reviewing the MOU and once they are done, they will send it to Department of Education (DOE) for further reviewal.

Presentation on the Early Eviction Mediation Program – [0:15:20]: Roberta Hickey from Mediation Center of the Pacific provided a PowerPoint presentation to provide information on the Early Eviction Mediation Program that is offered by The Mediation Center of the Pacific. This program was introduced in 2021 to address the end of Hawaiʻi's eviction moratorium. The program has seen a steady rise in interest to use their program due to outreach and community partnerships. The program is free for both parties to participate in early mediation. Using the program also helps both parties avoid going to court to dispute. Mediation sessions can be scheduled within 3-5 days when both parties are flexible. If English is not a participant's primary language, The Mediation Center of the Pacific (MCP) will provide an interpreter. The public is encouraged to schedule a mediation request online through their website or to call to get more information.

- Flyer: https://drive.google.com/file/d/1F7AaGo3zNkYXvLY8d1j1AuOBA40viNLN/view?usp=drive_link
- To schedule mediation, please visit: https://www.mediatehawaii.org/eem or call (808)-521-6767

Questions, comments, and concerns followed – [0:23:00]

VI. RESIDENT/COMMUNITY CONCERNS – [0:31:56]: No concerns at this time.

IV. ELECTED OFFICIALS – [0:32:00]

Office of Governor Josh Green – [0:32:05]: Melanie Martin provided the report and highlighted the following from the monthly newsletter for May 2025: groundbreaking ceremony took place for a new affordable housing development in Mōʻiliʻili; Hālawa Correctional Facility hosts first Keiki Day for incarcerated fathers; the Governor proclaimed May 2025 as Pride in Public

Service Month; the Department of Human Resources Development (DHRD) coordinated a two-day Operation Hire Hawai'i (OH-HI); and the Executive Office of Early Learning (EOEL) is accepting applications for the 2025-2026 public pre-K school year starting July 1, 2025.

- Newsletter: https://drive.google.com/file/d/1WDSYP9LzJqNeM37eH0tVM0eeGwq5YakY/view?usp=drive_link

Office of Congressman Ed Case – [0:35:26]: No representative present.

Office of Mayor Rick Blangiardi – [0:35:36]: Carrie Castle provided the report and highlighted the following: follow-up response on the Mililani Mauka wildfire; the public is invited to observe the 74th Mayor's Memorial Day Ceremony on Monday, May 26, 2025 at 8:30 a.m. at the National Memorial Cemetery of the Pacific; the City is asking for volunteers to help make or donate lei to adorn the 38,000 graves of our service members laid to rest at the National Memorial Cemetery of the Pacific; and follow-up responses for concerns raised at last month's Board meeting.

- Newsletter: https://drive.google.com/file/d/13msFnkpIMYzNK7SECuok2Pd2J1cFGSUi/view?usp=drive_link

Questions, comments, and concerns followed – [0:40:50]

Office of Councilmember District 8, Val Okimoto – [0:44:36]: Pua Smith-Kauhane provided the report and highlighted the following: the City Council is reviewing the City's FY 2026 budget; and the newsletter provides the dates for the high school graduations scheduled for May 2025 on O'ahu.

- Newsletter: https://drive.google.com/file/d/1e7V5c4tntG1ANHbkDbtihcEveuPp9Urz/view?usp=drive_link
- Real Property Tax, please visit https://realproperty.honolulu.gov/ ; Important date: June 30, 2025 end of the tax year
- Honolulu City Council meetings, please visit https://www.honolulucitycouncil.org/meetings
- To submit testimony for Bills/Resolutions, please visit https://hnldoc.ehawaii.gov/hnldoc/testimony
- Complete Streets – Sign up for quarterly reports, please visit https://www.honolulu.gov/completestreets/
- For more information on feral chickens, please visit https://www.honolulu.gov/csd/feral-chickens/
- To report graffiti, please visit Report Graffiti - Honolulu Police Department
- For more information on Adopt-a-Park, please visit Adopt-A-Block Notification Form | Storm Water Quality

Questions, comments, and concerns followed – [0:47:00]

Office of Councilmember District 2, Matt Weyer – [0:48:23]: Kelly Anaya provided the report and highlighted the following City legislative bill updates: Bill 18 (2025) relating to plastics – was signed into law by Mayor Blangiardi on May 2, 2025; Bill 15 (2025) relating to the climate resiliency fund – passed third reading at the May full City Council meeting and is now on the Mayor's desk for signature; Bill 36 (2025) relating to fiscal stability – passed its second reading at the May full Council meeting; Bill 29 (2025) relating to affordable housing - passed third reading at the May full City Council meeting and is now on the Mayor's desk for signature. Ms. Anaya also highlighted the following community updates: Mayor Blangiardi's Mililani Townhall meeting; restriping in Launani Valley; Honolulu Emergency Services Department (HESD) blessing ceremony for new emergency vehicles; the City Department of Parks and Recreation (DPR) is working to expand dog-friendly parks across O'ahu.

- Newsletter: https://drive.google.com/file/d/1AI0SqIAhueyY0yoBWyCojUE96lRykBAG/view?usp=drive_link

Questions, comments, and concerns followed – [0:51:30]

Office of Senator District 17, Donovan Dela Cruz – [0:57:10]: Charles Miller provided the report and highlighted the folowing: funds in House Bill (HB) 300 relating to the state budget – passed final reading and is now on the Governor's desk for signature; Senate Bill (SB) 934 relating to the funding for the planning, design, and construction for a park-and-ride facility adjacent to the Pearl Highlands rail transit station - passed final reading and is now on the Governor's desk for signature; Senate Bill (SB) 1044 relating to the stabilization of property insurance – passed final reading and is now on the Governor's desk for signature; and Senate Bill (SB) 1300 relating to school meals – was signed by Governor Green. Mr. Miller shared that Senator Dela Cruz plans to attend the Mililani High School graduation.

Office of Representative District 38, Lauren Matsumoto – [1:00:30]: Representative Matsumoto provided her report and highlighted the following: House Resolution (HR) 131 and House Concurrent Resolution (HCR) 137 both relating to pedestrian safety on the Kuahelani Avenue crosswalk at Kipapa Elementary School; House Resolution (HR) 130 and House Concurrent Resolution (HCR) 136; Phase 1 for the Mililani Mauka Emergency Access Road is complete; Women's Legislative Caucus Easter Basket Drive; Holomua Internship Summer 2025; Mililani Hongwanji Buddhist Temple Blood Drive schedule throughout the Summer; a full legislative report will be mailed out to residents who live in District 28; her mid-session survey results are available to view on https://repmatsumoto.com/

- Newsletter: https://drive.google.com/file/d/1FpNLYB_DFtQnYf1k0k-ZUXlBhDsLE1cM/view?usp=drive_link

Questions, comments, and concerns followed – [1:03:50]

Office of Representative District 46, Amy Perruso – [1:12:15]: Yvonne Yoro provided her report and highlighted the following: Part two of the Our Kuleana Community Forum series; military lease updates and upcoming community meetings to discuss the Final Environmental Impact Statement (EIS); Senate Bill (SB) 1396 relating to transient accommodation tax rates for economic development; House Bill (HB) 969 relating to waste or disposal facilities.
- Newsletter: https://drive.google.com/file/d/1uTGxjO6Bz3sMb8t0PKnqvDn0MjxvoCNt/view?usp=drive_link

Office of Representative District 37, Trish La Chica – [1:16:15]: Representative La Chica provided the report and higlighted the following: approved funding for barriers and fencing to be designed and constructed for Kīpapa Gulch; approved Grant-in-Aids for Wahiawā Community Health Center; House Bill (HB) 329 relating to pre-school access and housing; and Senate Bill (SB) 1300 relating to free school meals; and House Bill (HB) 862 relating to school bus options; and recap of the Community Safety Talk Story event that took place on Thursday, May 1, 2025; and shared several traffic safety upgrades she advocated for that are moving forward; and collaborated efforts with Major James Slayter to address and enforce traffic safety on Meheula Parkway and Kamehameha Highway.
- Newsletter: https://drive.google.com/file/d/1I3bDsVasf5Pe6lqifD1pRATyA2atVbuJ/view?usp=drive_link

Questions, comments, and concerns followed – [1:23:00]

State Department of Transportation, Casey Abe – [1:24:30]: Casey Abe provided his report and highlighted the following and provides photos for: field investigation done on April 22, 2025 for the Mililani Mauka Emergency Road; the State Department of Transportation maintenance crew covers up graffiti on street light pole and installs a new 'Express Lane' sign; the maintenance crew cuts back overgrowth near the Mililani Tech Park Sign; recent graffiti vandalism; May field investigation; follow-up response for last month's concern regarding Albizia trees growing along the freeway.
- For questions or concerns, please attach photos or google map location to casey.abe@hawaii.gov

Questions, comments, and concerns followed – [1:27:18]

VIII. APPROVAL OF BOARD MEETING MINUTES – [1:30:07]

Tuesday, April 15, 2025, Regular Meeting Written Summary for Video Record – [1:30:07]: Hearing no corrections, the Tuesday, April 15, 2025 Regular Meeting Written Summary for Video Record were approved as written; 7-0-0 (Aye: Hudson, Kuehu, Melendrez, Miyamoto, Rogers, Tamashiro, Hazama; Nay: None; Abstain: None) – [1:30:30].

IX. REPORTS – [1:30:43]

Patsy T. Mink Central O'ahu Regional Park – [1:30:43]: No report at this time.

Committees – Education – [1:30:50]: Co-Chair Hudson's provided her report and highlighted the following: Mililani 'Ike Elementary School – Memorial Day lei collection; graduating the Class of 2025; Mililani Mauka Elementary School (MMES) – school community council last meeting for the 2024-2025 school year; May Day celebration; Wheeler Elementary School – Student Council mission statement; Leilehua High School – students congratulate the Class of 2025 during Legacy Week; Summer ceramics sessions; 2025 Athletic Banquet; and Mules spotlight.

Hearing no objections, Chair Hazama returned to Section IX. A. Patsy T. Mink Central Oahu Regional Park.

Patsy T. Mink Central O'ahu Regional Park – [1:33:30]: Chair Hazama requested a follow-up from the mayor's representative regarding the status of Patsy T. Mink Central O'ahu Regional Advisory Committee by the next meeting.

Committees – Education – Continued – [1:34:58]: Committee Chair Melendrez provided his report and highlighted the following for Mililani Middle School: school administration; Summer Fun program for Mililani Middle School students at Mililani High School; robotics summer workshop and registration information; community meetings schedule and the school's year calendar.
- Report (Hudson): https://drive.google.com/file/d/1mVR4Dq0zAaoDT5_-GrauiDFWuwRA2Kau/view?usp=drive_link
- Report (Melendrez): https://drive.google.com/file/d/16J7BzHeysRFqi9iP2s-yughak0SdhNdT/view?usp=drive_link

Questions, comments, and concerns followed – [1:37:40]

Committees – Military and Civil Defense – [1:37:43]: No report.

Committees – Parks and Recreation – [1:37:45]: No report.

Committees – Planning, Permitting and Zoning – [1:37:48]: No report.

Committees – Transportation – [1:37:49]: No report.

Committees – Recognition and Service Awards – [1:37:53]: Committee Chair Rogers reported the Neighborhood Commission Office has shared their results from their survey that was given to all Neighborhood Board members. She also commended Member Kuehu's for her efforts she put forth at Mayor Blangiardi' s townhall meeting.

- Neighborhood Commission Office Survey results: https://drive.google.com/file/d/1HtJ06Qyg6O-Pv1iGHePP4uAe7V7y3DD0/view?usp=drive_link

X. ANNOUNCEMENTS – [1:39:27]

Next Meeting – [1:39:30]: The next Mililani Mauka/Launani Valley Neighborhood Board meeting will be held on Tuesday, June 17, 2025 at 7:00 p.m. at Mililani Mauka Elementary School and via WebEx.

Neighborhood Board Elections – [1:39:40]: Chair Hazama shared the Neighborhood Board elections has ended.

XI. ADJOURNMENT – [1:39:50]: The meeting was adjourned at 8:19 p.m.

Submitted by: Camilia Epa Gomes, Neighborhood Assistant, NCO
Reviewed by: Dylan Buck, Community Relations Specialist, NCO
Finalized by:

MILILANI MAUKA/ LAUNANI VALLEY NEIGHBORHOOD BOARD NO. 35
NEIGHBORHOOD COMMISSION • 925 DILLINGHAM BOULEVARD SUITE 160 • HONOLULU, HAWAI'I, 96817
TELEPHONE: (808) 768-3710 • FAX: (808) 768-3711 • INTERNET: https://www8.honolulu.gov/nco/

INITIAL CONVENING MEETING AGENDA

TUESDAY, JULY 15, 2025, at 7:00 p.m.
MILILANI MAUKA ELEMENTARY SCHOOL
95-1111 MAKAIKAI STREET, MILILANI HI 96789
AND VIA WEBEX

WebEx Link: https://cchnl.webex.com/cchnl/j.php?MTID=mda311055081761002939 0c6f72decace
Meeting number / Access Code: 2490 158 5754
Password: NB35 (6235 from phones and video systems)
Join by phone: +1-408-418-9388 (United States Toll)

Meeting Materials Link: https://drive.google.com/drive/folders/1zCauqWgTX4syd8vO3Ci5UCL_ePiRXlbE
Video Recordings: http://www.youtube.com/@NeighborhoodCommissionOffice

Rules of Speaking: Anyone wishing to speak is asked to raise their hand, and when recognized by the Chair, to address comments to the Chair. All dialogue at the meeting will be conducted by use of the microphone. Those joining the meeting on WebEx are reminded to mute their speakers until they wish to be recognized by the Chair. Anyone not following these rules will be ruled out of order by the Chair. Those providing Presentations to the Board are encouraged to do so via a PowerPoint presentation, with a projector and provide handouts for the board and the community. The public concerns and comments are limited to three (3) minutes each. Please silence all electronic devices.

Note: The Board may take action on any agenda item. As required by the State Sunshine Law (HRS 92), specific issues not noted on this agenda cannot be voted on, unless allowed for under HRS 92. A two-thirds (2/3) vote (5) of this 9- member Board is required to meet quorum requirements.

I. CALL TO ORDER: Chair Pro Tem Dean I. Hazama

II. PRESENTATION OF THE COLORS & PLEDGE OF ALLEGIANCE: Scouts BSA Troup 664

III. MEETING DECORUM: Vice Chair Pro Tem Keith Tamashiro

IV. MONTHLY REPORTS

A. Honolulu Fire Department (HFD)

B. Honolulu Police Department (HPD)

C. Board of Water Supply (BWS)

D. Military Representative Report

V. ELECTION OF OFFICERS AND DETERMINATION OF BOARD DETAILS

A. Election of Board Officers – To serve from July 2025 to June 30, 2026: Chair, Vice Chair, Secretary, Treasurer, and any other officer the board determines it needs to conduct its business.

B. Meeting Date, Time, Location, and Format (Virtual Component)

C. Determination of Board Recess Schedule – August 2025, December 2025, and March 2026

D. Adoption of Oral Testimony Rules: public comments 3 minutes, presentations by mutual agreement of presenter and the Chair.

E. Formation of Committees (NP §2-14-124[a]). The Board may establish committees. If any Board Member is interested in serving on a committee; please inform the Chair.

VI. BOARD BUSINESS

A. Update on Affordable Housing Project at Mililani High School – Cherri Nakamura (HISFA)

B. Update on Memorandum of Understanding (MOU) between DOE and C&C Parks on Community use of new Mililani Middle School Parking Lot.

VII. RESIDENT/COMMUNITY CONCERNS: Any community member can come forward and express any comment or concern within decorum. Please, limit your comments to three (3) minutes each per issue for items not on the agenda.

VIII. ELECTED OFFICIALS

A. Office of Governor Josh Green – Melanie Martin

B. Office of Congressman Ed Case – Nestor Garcia

C. Office of the Mayor Rick Blangiardi – Carrie Castle

D. Office of Councilmember District 8, Val Okimoto

E. Office of Councilmember District 2, Matt Weyer

F. Office of Senator District 17, Donovan Dela Cruz

G. Office of Representative District 38, Lauren Matsumoto

H. Office of Representative District 46, Amy Perruso

I. Office of Representative District 37, Trish La Chica

J. State Department of Transportation – Casey Abe

IX. APPROVAL OF BOARD MEETING MINUTES: June 17, 2025 Regular Meeting Minutes

X. REPORTS

A. Patsy T. Mink Central Oahu Regional Park

B. Committees

a) Education – Steven Melendrez/Anna Hudson

b) Military and Civil Defense – Keith Tamashiro

c) Parks and Recreation – Susan Miyamoto

d) Planning, Permitting and Zoning – Stanton Oishi & Dana Agader

e) Transportation – Dean Hazama

f) Recognition and Service Awards – Alice Rogers

XI. ANNOUNCEMENTS

A. The next Mililani Mauka/Launani Valley Neighborhood Board will be held on Tuesday, August 19, 2025, at 7:00 p.m. at Mililani Mauka Elementary School and via WebEx.

XII. ADJOURNMENT

A map of the subdistrict boundaries is at – https://www8.honolulu.gov/nco/boards-and-sub-district-boundary-descriptions/

Capital Improvement Projects (CIP) and Budget Planning. Suggestions for projects in the Neighborhood Board district and adjacent areas are welcome at any time to prepare for planning actions and the next fiscal year.

A mailing list is maintained for interested persons and agencies to receive this board's agenda and minutes. Additions, corrections, and deletions to the mailing list may be directed to the Neighborhood Commission Office (NCO) at Kapālama Hale, 925 Dillingham Boulevard, Suite 160, Honolulu, HI 96817, by telephone on (808) 768-3710, fax (808) 768-3711, or e-mailing nco@honolulu.gov Agenda documents and minutes are also available online at https://www8.honolulu.gov/nco/

All written testimony must be received in the Neighborhood Commission Office 48 hours prior to the meeting. If within 48 hours of the meeting, written and/or oral testimony may be submitted directly to the Board at the meeting. If submitting written testimony, please note the Board and agenda item(s) your testimony concerns. Send to: Neighborhood Commission Office, 925 Dillingham Boulevard, Suite 160, Honolulu, HI 96817, fax (808) 768-3711, or email nbtestimony@honolulu.gov

If you need an auxiliary aid/service or other accommodation due to a disability or an interpreter for a language other than English, please call the Neighborhood Commission Office at (808) 768-3710 between 8:00 a.m. and 4:00 p.m. or send an email to nco@honolulu.gov at least three (3) business days before the scheduled meeting. It may not be possible to fulfill requests received after this date.

MILILANI MAUKA / LAUNANI VALLEY NEIGHBORHOOD BOARD NO. 35

NEIGHBORHOOD COMMISSION | 925 DILLINGHAM BOULEVARD SUITE 160 | HONOLULU, HAWAII, 96817
PHONE (808) 768-3710 | FAX (808) 768-3711 | INTERNET: https://www8.honolulu.gov/nco/

DRAFT REGULAR MEETING WRITTEN SUMMARY FOR VIDEO RECORD
TUESDAY, JULY 15, 2025 at 7:00 P.M.
MILILANI MAUKA ELEMENTARY SCHOOL – 95-**1111 MĀKA'IKA'I STREET, MILILANI, HI 96789**
AND VIA WEBEX

Video recording of this meeting can be found at: https://www.youtube.com/watch?v=-Pqwqg_gHkw

Reports & other meeting materials can be found at:
https://drive.google.com/drive/folders/1n1MZSzt3NC1_zPbcl7bW52pWK8B8UisO?usp=sharing

I. CALL TO ORDER – [0:00:01]: 7:00 p.m.

Chair Dean I. Hazama called the meeting to order at 7:00 p.m.; Quorum was established with eight (8) members present. Note – This nine (9) member Board requires five (5) members to establish a quorum and to take official Board action.

Board Members Present: Dana Agader, Dean Hazama, Theresa Kuehu, Steven Melendrez, Susan Miyamoto, Stanton Oishi, Alice Rogers, and Keith Tamashiro.

Board Members Absent: Dave Fields

Guests: Firefighter Ryan Canotal, Captain Reyes (Honolulu Fire Department); Lieutenant R. Baysa and Sergeant J. Yoshioka (Honolulu Police Department); Kathleen Elliott-Pahinui (Honolulu Board of Water Supply); Lieutenant Colonel Melander (Military Representative); Deputy Director Carrie Castle (Mayor Rick Blangiardi); Cheri Nakamura (Hawaii School Facilities Authority); Councilmember Val Okimoto (Council District 8); Kelly Anaya (Councilmember Matt Weyer); Charles Miller (Senator Donovan Dela Cruz); Representative Lauren Matsumoto (State House District 38); Representative Amy Perruso (State House District 46); Representative Trish La Chica (State House District 37); Casey Abe (Department of Transportation Highways Division); Scout BSA Troop 664; Jocelyn T. Roberts, Rick Bloxson, Daniel M. Gabriel, (Resident); Camilia Epa Gomes (Neighborhood Commission Office). Note: Name was not included if not legible. There were 12 total participants.

II. PRESENTATION OF THE COLORS & PLEDGE OF ALLEGIANCE – [0:00:20]: Scout BSA Troop 664 led the Pledge of Allegiance.

III. MEETING DECORUM – [0:02:00]: Vice Chair Keith Tamashiro recited the rules of speaking.

IV. MONTHLY REPORTS – [0:02:56]

Honolulu Fire Department (HFD) – [0:02:56]: Firefighter Ryan Canotal from Station 41 provided the report and highlighted the following: one nuisance fire and two activated alarms with no actual fires; 26 medical calls; one mountain rescue; July fire safety tips focused on wildland fires, including reducing ignition risk by maintaining yards, clearing vegetation around campfires, and ensuring machinery is properly maintained.

- Report: https://drive.google.com/file/d/1vn3pPwfEiSBjVVeWhsEVsWL0Lkwmf2wD/view?usp=drive_link

Questions, comments, and concerns followed – [0:04:13]

- Chair pro tem Hazama reported that the Honolulu Fire Department completed their investigation of the Mililani Mauka fire and passed information to other agencies to continue the investigation. He thanked the fire chief for submitting the report and noted it took eight days to completely extinguish the fire in a remote area, with military assistance providing flight hours and water drops. He also thanked the Mayor's representative Carrie Castle for setting up the meeting.

Honolulu Police Department (HPD) – [0:05:49]: Lieutenant R. Baysa with Sergeant John Yoshioka provided the report and highlighted the following: July statistics for Mililani Mauka and Launani Valley showing zero assaults, one burglary, zero robberies, zero car break-ins, and 159 calls for service; summer safety tips for visiting parks and beaches; information about a recent Gun Buyback Program at Wahiawa Station that collected 234 guns (117 handguns, 13 shotguns, 92 rifles, 12 assault rifles) and 70 pounds of ammunition.

- HPD Data Dashboard: Microsoft Power BI
- Crime Mapping: https://www.crimemapping.com/
- To submit non-emergency reports online please visit: https://www.frontlinepss.com/honolulupolice

- For more information on HPD's Gun Buyback Program, please call the Wahiawa community policing team 808-723-8710.

Questions, comments, and concerns followed – [0:08:15]

- Daniel M. Gabriel asked about the gun buyback program, specifically who determined that Foodland gift cards would be used and where the funding came from. Lieutenant Baysa responded that the gift cards are simply an incentive, and Foodland was gracious enough to provide them. He explained many people turning in firearms are elderly individuals who have inherited unwanted guns from deceased spouses.

Board of Water Supply (BWS) – [0:10:04]: Kathleen Elliott-Pahinui provided the report and highlighted the following: no main breaks in the past month; announcement of the annual Unthirsty Plant Sale on Saturday, August 2, 2025 from 9:00 a.m. to 1:00 p.m. at the Hālawa Xeriscape Garden; vendors will be selling low-water, low-maintenance plants; plant doctors from the UH Master Gardener program will provide advice; free soil conditioner will be available.

- Report: https://drive.google.com/file/d/1qX4VfwiwfacNE971Ga_MkqRiLCC-kLZQ/view?usp=drive_link

Military Representative Report – [0:11:46]: Lieutenant Colonel Melander provided the report and highlighted the following: update on the Schofield Barracks range fire that burned approximately 600 acres, with air operations conducted by 25th Aviation Brigade and Hawaii Air National Guard using Blackhawks and Chinook helicopters that dropped more than 660 gallons of water; training schedule for July including East Range jungle and ranger tactics from 6:00 a.m. to 6:00 p.m. weekdays, aviation training July 21-25 from 6:00 a.m. to 6:00 p.m., and artillery/mortar/demolitions training from 5:00 a.m. to midnight July 25-31; announcement of the Joint Pacific Multinational Readiness Center (JPMRC) exercise planned for October-November; the next job fair is on Tuesday, August 19 at Helemano Military Reservation from 8:30 a.m. to 2:00 p.m.

- For more information on the job fair, go to: https://www.himwr.com
- Community Concern Hotline: (808) 787-1528 or email usag.hawaii.com@army.mil

Questions, comments, and concerns followed – [0:14:30]

- Board Member Kuehu asked about aircraft flying over residential homes, noting that on Saturday night around 8:45 p.m., two aircraft were seen flying low over Launani Valley. Lieutenant Colonel Melander said he would look into whether flight paths are supposed to avoid residential areas and provide an answer.

V. ELECTION OF OFFICERS AND DETERMINATION OF BOARD DETAILS – [0:15:42]

Election of Board Officers – To serve from July 2025 to June 30, 2026 – [0:15:50]: Member Rogers commented if there aren't any officers who wanted to resign their officer positions that they can make a motion to keep all the officers the same if the Board has a unanimous consent. Chair pro tem Hazama asked the Board if there is anyone wishing to be a Board officer as well as if the previous term's Board officers are still willing to serve as a Board officer.

[0:17:00] **–** Member Rogers MOVED and Kuehu **SECONDED to retain the previous term's officers: Chair**, Vice Chair, Treasurer, and Secretary. Hearing no discussion or objections, the motion was ADOPTED; 8-0-0 (Aye: Agader, Kuehu, Melendrez, Miyamoto, Oishi, Rogers, Tamashiro, Hazama); Nay: None; Abstain: None) – [0:18:09].

Meeting Date, Time, Location, and Format (Virtual Component) – [0:18:20]: Member Kuehu and Member Rogers objected to the virtual component but did not oppose the overall motion. [0:18:50] **–** Chair Hazama proposed retaining the previous **term's meeting date/time/location/format: Third Tuesday/7:00 p.m./Mililani Mauka Elementary School Cafeteria/ with** a virtual component via WebEx. After further discussion, the motion was ADOPTED; 8-0-0 (Aye: Agader, Kuehu, Melendrez, Miyamoto, Oishi, Rogers, Tamashiro, Hazama); Nay: None; Abstain: Kuehu) – [0:19:30].

Determination of Board Recess Schedule – [0:19:40]: [0:19:45] **–** Chair Hazama proposed to recess for August 2025, December 2025, and March 2026. Hearing no objections, the motion was ADOPTED; 8-0-0 (Aye: Agader, Kuehu, Melendrez, Miyamoto, Oishi, Rogers, Tamashiro, Hazama); Nay: None; Abstain: None) **–** [0:20:05].

Adoption of Oral Testimony Rules – [0:20:12]: [0:20:13] **–** Chair Hazama proposed retain**ing the previous term's oral** testimony rules: three (3) minutes for public comments and presentations by mutual agreement of presenter and the Chair. Hearing no discussion or objections, the motion WAS ADOPTED; 8-0-0 (Aye: Agader, Kuehu, Melendrez, Miyamoto, Oishi, Rogers, Tamashiro, Hazama); Nay: None; Abstain: None) **–** [0:20:35].

Formation of Committees – [0:20:41]: Chair Hazama stated he would contact each board member to determine committee preferences and present a list at the next meeting.

Questions, comments, and concerns followed – [0:21:00]

- Board member Kuehu asked whether the board should consider having a meeting in August 2025 instead of recessing, given the large community meeting scheduled for July 30, 2025. Chair Hazama responded that the July 30th meeting would be a special board meeting and there would be enough time to address any follow-up issues, noting they could always reconvene if necessary.

VI. BOARD BUSINESS – [0:21:44]

Update on Affordable Housing Project at Mililani High School – [0:21:45]: Cheri Nakamura from the Hawaii School Facilities Authority (HSFA) provided an update and highlighted the following: On June 24, 2025, Acting Governor Sylvia Luke signed House Bill (HB) 329 into law (Act 204), which includes a $2 million appropriation for the Mililani High School teacher workforce housing project; the project location was moved from site A to site B by the athletic fields; a recent employee survey confirmed strong teacher demand for rental housing, with Mililani being the most desirable location on O'ahu among teachers surveyed.

- Employee Housing Survey Results: https://drive.google.com/file/d/1wfjWcdQMlu6h5ekxC_vB8EqfLcd4sbm7/view?usp=drive_link

Questions, comments, and concerns followed – [0:24:20]

- Board Member Kuehu asked about the demographics of the teachers surveyed. Sheri Nakamura explained it was a statewide survey with a 43% response rate, focused on educators most likely to need housing.
- Board Member Kuehu also asked about the timeline for site B development. Sheri Nakamura responded that they don't have a firm timeline as they are still working on details regarding boundary lines and site control, but they are earnestly working with DOE to progress the project.

Update on Memorandum of Understanding (MOU) between Dept. of Education and City Parks and Recreation on Community Use of New Mililani Middle School Parking Lot – [0:27:05]: Chair Hazama reported that DOE presented the City with an updated MOU on Wednesday, July 2, 2025 that is being reviewed by City Department of Parks and Recreation. Further updates were provided during the Mayor Representative report.

VII. RESIDENT/COMMUNITY CONCERNS – [0:27:41]: No concerns at this time.

Special Neighborhood Board Meeting – [0:27:50]: Chair Hazama announced a special neighborhood board joint meeting on Wednesday, July 30 at 6:30 p.m. at Leilehua High School cafeteria regarding the Kamananui gondola project on the North Shore. This will be a joint meeting with Mililani Town Neighborhood Board, Wahiawa Neighborhood Board, and North Shore Neighborhood Board. He provided background on the project, noting that the applicant received a Conditional Use Permit (CUP) minor over 10 years ago and is now asking the Department of Planning and Permitting (DPP) to revise conditions. He expressed concern that this should have been classified as a CUP major due to the project's size and that if the developer wants to revise conditions, the entire permit process should start over.

Questions, comments, and concerns followed – [0:31:16]

- Board Member Rogers commented that Kamehameha Highway is extremely dangerous with frequent accidents, and expressed concern about City Department of Planning and Permitting not attending the meeting.
- Board Member Kuehu suggested inviting military representatives to the meeting since they have facilities in the area that could be impacted, including on Mount Ka'ala. Chair Hazama agreed to check with the North Shore Neighborhood Board about inviting military representatives.

VIII. ELECTED OFFICIALS – [0:33:54]

Office of Governor Josh Green – [0:34:00]: No representative present.

- Newsletter: https://drive.google.com/file/d/1NwdIce6UIPIziL2WvJN-vNn4r4R2oR-j/view?usp=drive_link

Office of Congressman Ed Case – [0:34:03]: No representative present.

Office of Mayor Rick Blangiardi – [0:34:12]: Deputy Director Carrie Castle (City Department of Budget and Fiscal Services) provided the report and highlighted the following: Department of Community Services now offers online learner's permit tests; Skyline Rail is conducting an emergency preparedness drill from 10:00 p.m. to 6:00 a.m. in preparation for opening segment two, which will include stops at the Daniel K. Inouye International Airport, Pearl Harbor, and Lagoon Drive with a target opening date of October 1st; update on the Mililani Middle School parking lot MOU, proposing a combination lock system where the code would be issued to permit holders and a follow-up meeting will be held on Wednesday, July 30, 2025.

Questions, comments, and concerns followed – [0:39:12]
- Chair Hazama expressed frustrations that resolving the lock issue for the Mililani Middle School parking lot has taken two and a half years.

Office of Mayor Rick Blangiardi – Continued – [0:39:45]: Ms. Castle continued her report and shared that the Mililani Mauka emergency access road is complete and ready for use in the case of an emergency.

Questions, comments, and concerns followed – [0:41:09]
- Board Member Rogers inquired if the city buses will be using the emergency access road. Carrie Castle replied and confirmed the city buses will not be using the road.
- Board Member Melendrez asked about signage for the emergency access road, noting there is a locked chain across the entrance with no information about who to contact in an emergency. Deputy Director Castle said she would look into the signage issue.
- Chair Hazama suggested adding signage and red paint to prevent vehicles from parking in front of the emergency access gate.
- Board Member Kuehu noted that vehicles from the neighboring marketplace frequently park in front of the emergency access area, and existing no-parking signs are faded. She explained that HPD officers have told her they cannot issue citations without proper signage, even with red curb paint.

Office of Mayor Rick Blangiardi – Continued – [0:45:33]: Ms. Castle continued her report and provided an update on the road repaving project, stating that phase one is substantially complete and phase two began in May 2025 but is currently paused as the concrete contractor is tied up with other commitments. Work is expected to resume in August 2025, with road paving beginning in late 2025 and completion expected by summer 2026.
Newsletter: https://drive.google.com/file/d/12p3AbD0yryDVIRw7m_V7dGkwr_HqeEjr/view?usp=drive_link

Questions, comments, and concerns followed – [0:47:04]
- Board Member Melendrez requested a map showing which streets will be repaved. Carrie Castle agreed to request this information.
- Chair Hazama asked if the work would include addressing tree root problems before repaving. Carrie Castle said she would inquire about this.

Office of Councilmember District 8, Val Okimoto – [0:49:30]: Councilmember Val Okimoto provided the report and highlighted the following: distribution of her June newsletter with survey results showing public safety, education, health and wellness, and affordable housing as community priorities; introduction of Bill 49 (2025) and Bill 50 (2025) related to real property tax, which would increase homeowner exemptions for kupuna taxpayers and the base exemption amount; update on the Ocean Safety Commission; and a presentation of a certificate of recognition to outgoing board member Anna Hudson.
- Newsletter: https://drive.google.com/file/d/1w1WdIKEwC4qwEBHrMtnWviSGpbGF9mDs/view?usp=drive_link
- Real Property Tax, please visit https://realproperty.honolulu.gov/ ; Important date: June 30, 2025 end of the tax year.
- Honolulu City Council meetings, please visit https://www.honolulucitycouncil.org/meetings
- To submit testimony for Bills/Resolutions, please visit https://hnldoc.ehawaii.gov/hnldoc/testimony
- Complete Streets – Sign up for quarterly reports, please visit https://www.honolulu.gov/completestreets/
- For more information on feral chickens, please visit https://www.honolulu.gov/csd/feral-chickens/
- To report graffiti, please visit Report Graffiti - Honolulu Police Department
- For more information on Adopt-a-Park, please visit Adopt-A-Block Notification Form | Storm Water Quality

Questions, comments, and concerns followed – [0:54:45]
- Chair Hazama asked about committee assignments following the council reorganization. Councilmember Okimoto explained she now serves as chair of the Budget Committee, is a voting member on the Zoning Committee, vice chair of Planning Infrastructure and Technology, continues as a voting member on Public Safety, and serves on the International and Legal Affairs Committee and Executive Management Committee.

Office of Councilmember District 2, Matt Weyer – [0:56:01]: Kelly Anaya provided the report and highlighted the following: approval of the $3.93 billion executive operating budget and $1.28 billion capital improvement budget; funding allocations including $4 million for the Wahiawa ambulance unit facility, $900,000 for an additional playing field and parking lot at Patsy Mink Central Oahu Regional Park, and $800,000 for tree farm improvements; Councilmember Weyer's participation in the 53rd anniversary of Title IX; and the 11th Annual Bio-Economy Forum; and a request for clarification of a question regarding e-bike legislation.

Office of Senator District 17, Donovan Dela Cruz – [0:59:05]: Charles Miller provided the report and highlighted the following: the 59th annual Farm Fair was held in Whitmore Village; Governor signed House Bill (HB) 427 (Act 236) regarding biosecurity, which allows the Governor to declare biosecurity statewide emergencies, allocates $26.6 million to fund 44 new positions, and renames the Department of Agriculture to the Department of Agriculture and Biosecurity; Governor signed Senate Bill (SB) 222 (Act 246) extending the illegal firework task force to 2030.

Office of Representative District 38, Lauren Matsumoto – [1:00:44]: Representative Matsumoto provided the report and highlighted the following: distribution of her Session Wrap-up Newsletter; ongoing work to get information on signage for the emergency access road; passage of 322 bills by the Hawai'i State legislature this session; encouragement for constituents to sign up for her e-newsletter at www.repmatsumoto.com; announcement that she is drafting legislation and encourages community input; completion of her term as national chair of Women in Government; changes in her committee assignments, now serving on Agriculture and Environmental Protection instead of Economic Development and Tourism.

Questions, comments, and concerns followed – [1:05:00]

- Board Member Kuehu asked about adding lighted school crossing signs at crosswalks, particularly near Kipapa Elementary School, noting these would be more effective than speed humps. Representative Matsumoto agreed this would be helpful, especially given the multiple close calls at Kipapa Elementary in recent years, and said she would make this suggestion.
- Board Member Rogers asked about fireworks enforcement on July 4th. Representative Matsumoto noted she didn't have specific data but observed that July 4th typically doesn't see as much fireworks activity in Hawai'i as other holidays.

Newsletter: https://drive.google.com/file/d/1ZjeEWel3SEntR3HsnOsZgOqmGY8qYfHu/view?usp=drive_link

Office of Representative District 46, Amy Perruso – [1:08:56]: Representative Perruso provided the report and highlighted the following: impacts of the federal "One Big Beautiful Bill Act" including cuts to Medicaid, Supplemental Nutrition Assistance Program (SNAP), and renewable energy subsidies that will affect electricity rates; work with state legislators across the country on maintaining renewable energy progress; collaboration with advocacy groups on allocating $50 million to critical nonprofit work; mentoring for the Seeds of Peace Girls Talk Back program; plans for a community forum in late August.

Office of Representative District 37, Trish La Chica – [1:12:47]: Representative La Chica provided the report and higlighted the following: her House Bill (HB) 1231 was signed into law and is now Act 212, which establishes the largest dedicated funding source for the Safe Routes to School program; the Safe Routes to School funding will provide infrastructure within a one-mile radius of school zones; update on the Kipapa Elementary crosswalk project on Kuahelani Avenue, where a speed study is being completed; Neighborhood Board joint meeting on Wednesday, July 30, 2025; Mililani Mauka Phase 24 road rehabilitation project update; a follow-up response on concerns relating to parking issues on 'Āinamakua Drive due to repaving of the roads in the area; helping run the admission gate for the Hawai'i State Farm Fair; there were no citations in the community during the Fourth of July weekend; upcoming site visits that are scheduled for House committees; updates on various district projects the State Department of Transportation is currently addressing; introduced her Office Manager, Tosa Lobendahn and UH Manoa Summer Intern, Stella Adeyemi; and noted the Department of Education will be meeting with Department of Parks and Recreation to discuss the MOU on Wednesday, July 2, 2025.

- Newsletter: https://drive.google.com/file/d/1GS3c-_N7sJyDa9h16plE0QMigdN0jQok/view?usp=drive_link

State Department of Transportation, Casey Abe – [1:21:00]: Casey Abe provided the report and highlighted the following: Deputy Director Robin Shishido will meet with City DTS Deputy Director Jon Nouchi on Friday to discuss the MOA for the emergency access road; maintenance crews have addressed graffiti issues; replaced the Pineapple Road overpass sign; coordinated with Hawaii Telecom to replace a damaged utility box cover; landscape contractors cut back overgrowth vegetation along the H-2 freeway; materials for repairing the steel plates on the H-2 freeway are expected by the end of July with repairs completed by the August 19th neighborhood board meeting; plans to install raised crosswalks and rectangular rapid flashing beacons at various H-2 on-ramps and off-ramps.

- Presentation: https://drive.google.com/file/d/1AtpUmRzYRPBlqWRjkavAqNb30Cyk_D6N/view?usp=drive_link
- For questions or concerns, please attach photos or google map location to casey.abe@hawaii.gov

Questions, comments, and concerns followed – [1:25:00]

- Board Member Kuehu expressed concern about the plan to install a raised crosswalk at the H-2 southbound off-ramp to Mililani Town, noting that vehicles coming off the freeway at 35-45 mph would hit the raised crosswalk in a turn. She suggested a rectangular rapid flashing beacon would be more appropriate. Mr. Abe said he would discuss this with the traffic branch.
- Chair Hazama asked about plans for the H-2 southbound loop on-ramp. Mr. Abe said he would check on this.

- Board Member Kuehu requested that Mr. Abe provide his presentation slides to the board for better review of the proposed changes. Mr. Abe agreed to send the slides to the neighborhood board assistant for distribution.

IX. APPROVAL OF BOARD MEETING MINUTES – [1:30:35]

Tuesday, June 17, 2025, Regular Meeting Written Summary for Video Record – [1:30:35]: Hearing no objections, the Tuesday, June 17, 2025 Regular Meeting Written Summary for Video Record were approved with ammendments; 8-0-0 (Aye: Agader, Kuehu, Melendrez, Miyamoto, Oishi, Rogers, Tamashiro, Hazama; Nay: None; Abstain: None) – [1:30:45].

X. REPORTS – [1:30:50]

Patsy T. Mink Central Oʻahu Regional Park – [1:30:54]: No report at this time.

Committees – Education – [1:31:00]: Committee Chair Melendrez provided the report on Mililani Middle School and highlighted the following: important dates including July 1 (fees and payments accepted), July 14 (school bus application portal opened), July 15 (free and reduced meal applications accepted), July 31 (student packet pickup for last names A-L), August 1 (student packet pickup for last names M-Z), August 4 (school starts); August 18-19 (team open houses); August 20 (electives and high interest programs open house); ongoing community meetings including Parent Teacher Student Organization (PTSO) at 5:00 p.m. and School Community Council (SCC) at 6:00 p.m. every Tuesday; and the Mililani Middle School 2025-2026 School Year Calendar.

- Report: https://drive.google.com/file/d/1P2-4F3bhqS3uDP32GzJXqnXIS76TkrvR/view?usp=drive_link

Committees – Military and Civil Defense – [1:34:11]: No report at this time.

Committees – Parks and Recreation – [1:34:18]: No report at this time.

Committees – Planning, Permitting and Zoning – [1:34:23]: No report at this time.

Committees – Transportation – [1:34:29]: No report at this time.

Committees – Recognition and Service Awards – [1:34:30]: No report at this time.

XI. ANNOUNCEMENTS – [1:34:30]

Next Meeting – [1:15:10]: The Mililani Mauka/Launani Valley Neighborhood Board meeting will recess in August and the next meeting will be held on Tuesday, September 16, 2025 at 7:00 p.m. at Mililani Mauka Elementary School and via WebEx.

XII. ADJOURNMENT – [1:35:18]: The meeting was adjourned at 8:35 p.m.

Submitted by: Camilia Epa Gomes, Neighborhood Assistant, NCO
Reviewed by: Dylan Buck, Community Relations Specialist, NCO
Finalized by: Susan Miyamoto, Secretary, Neighborhood Board No.35

MILILANI MAUKA/ LAUNANI VALLEY NEIGHBORHOOD BOARD NO. 35
NEIGHBORHOOD COMMISSION • 925 DILLINGHAM BOULEVARD SUITE 160 • HONOLULU, HAWAII, 96817
TELEPHONE: (808) 768-3710 • FAX: (808) 768-3711 • WEBSITE: https://www8.honolulu.gov/nco/

REGULAR MEETING AGENDA
TUESDAY, SEPTEMBER 16, 2025, at 7:00 p.m.
MILILANI MAUKA ELEMENTARY SCHOOL
95-1111 MAKAIKAI STREET, MILILANI HI 96789 AND
VIA WEBEX

WebEx Link: https://cchnl.webex.com/cchnl/j.php?MTID=mda311055081761002939 0c6f72decace
Meeting number / Access Code: 2490 158 5754
Password: NB35 (6235 from phones and video systems)
Join by phone: +1-408-418-9388 (United States Toll)

Meeting Materials Link: https://drive.google.com/drive/folders/1zCauqWgTX4syd8vO3Ci5UCL_ePiRXlbE
Video Recordings: http://www.youtube.com/@NeighborhoodCommissionOffice

Rules of Speaking: Anyone wishing to speak is asked to raise their hand, and when recognized by the Chair, to address comments to the Chair. All dialogue at the meeting will be conducted by use of the microphone. Those joining the meeting on WebEx are reminded to mute their speakers until they wish to be recognized by the Chair. Anyone not following these rules will be ruled out of order by the Chair. Those providing Presentations to the Board are encouraged to do so via a PowerPoint presentation, with a projector and provide handouts for the board and the community. The public concerns and comments are limited to three (3) minutes each. Please silence all electronic devices.

Note: The Board may take action on any agenda item. As required by the State Sunshine Law (HRS 92), specific issues not noted on this agenda cannot be voted on, unless allowed for under HRS 92. A two-thirds (2/3) vote (5) of this 9- member Board is required to meet quorum requirements.

I. CALL TO ORDER: Chair Dean I. Hazama

II. PRESENTATION OF THE COLORS & PLEDGE OF ALLEGIANCE: Scouts BSA Troup 664

III. MEETING DECORUM: Vice Chair Keith Tamashiro

IV. MONTHLY REPORTS

A. Honolulu Fire Department (HFD)

B. Honolulu Police Department (HPD)

C. Board of Water Supply (BWS)

D. Military Representative Report

V. BOARD BUSINESS

A. Update on Affordable Housing Project at Mililani High School – Cherri Nakamura (HISFA)

B. Update on Memorandum of Understanding (MOU) between DOE and C&C Parks on Community use of new Mililani Middle School Parking Lot.

C. Walk Bike Drive Presentation – Paula Bender (Hawai‘i Bicycling League)

D. Kamananui Project Update and Resolution with consideration to take board action.

E. Empty Homes Tax Resolution with consideration to take board action.

VI. RESIDENT/COMMUNITY CONCERNS: Any community member can come forward and express any comment or concern within decorum. Please, limit your comments to three (3) minutes each per issue for items not on the agenda.

VII. ELECTED OFFICIALS

A. Office of Governor Josh Green – Melanie Martin

B. Office of Congressman Ed Case – Nestor Garcia

C. Office of the Mayor Rick Blangiardi – Carrie Castle

D. Office of Councilmember District 8, Val Okimoto

E. Office of Councilmember District 2, Matt Weyer

F. Office of Senator District 17, Donovan Dela Cruz

G. Office of Representative District 38, Lauren Matsumoto

H. Office of Representative District 46, Amy Perruso

I. Office of Representative District 37, Trish La Chica

J. State Department of Transportation – Casey Abe

VIII. APPROVAL OF BOARD MEETING MINUTES: July 15, 2025, Regular Meeting Minutes

IX. REPORTS

A. Committees

a) Education – Steven Melendrez/Anna Hudson

b) Military and Civil Defense – Keith Tamashiro

c) Parks and Recreation – Susan Miyamoto

d) Planning, Permitting and Zoning – Stanton Oishi & Dana Agader

e) Transportation – Dean Hazama

f) Recognition and Service Awards – Alice Rogers

X. ANNOUNCEMENTS

A. The next Mililani Mauka/Launani Valley Neighborhood Board will be held on Tuesday, October 21, 2025, at 7:00 p.m. at Mililani Mauka Elementary School and via WebEx.

XI. ADJOURNMENT

A map of the subdistrict boundaries is at – https://www8.honolulu.gov/nco/boards-and-sub-district-boundary-descriptions/

Capital Improvement Projects (CIP) and Budget Planning. Suggestions for projects in the Neighborhood Board district and adjacent areas are welcome at any time to prepare for planning actions and the next fiscal year.

A mailing list is maintained for interested persons and agencies to receive this board's agenda and minutes. Additions, corrections, and deletions to the mailing list may be directed to the Neighborhood Commission Office (NCO) at Kapālama Hale, 925 Dillingham Boulevard, Suite 160, Honolulu, HI 96817, by telephone on (808) 768-3710, fax (808) 768-3711, or e-mailing nco@honolulu.gov Agenda documents and minutes are also available online at https://www8.honolulu.gov/nco/

All written testimony must be received in the Neighborhood Commission Office 48 hours prior to the meeting. If within 48 hours of the meeting, written and/or oral testimony may be submitted directly to the Board at the meeting. If submitting written testimony, please note the Board and agenda item(s) your testimony concerns. Send to: Neighborhood Commission Office, 925 Dillingham Boulevard, Suite 160, Honolulu, HI 96817, fax (808) 768-3711, or email nbtestimony@honolulu.gov

MILILANI MAUKA / LAUNANI VALLEY NEIGHBORHOOD BOARD NO. 35

NEIGHBORHOOD COMMISSION | 925 DILLINGHAM BOULEVARD SUITE 160 | HONOLULU, HAWAIʻI, 96817
PHONE (808) 768-3710 | FAX (808) 768-3711 | WEBSITE: https://www.honolulu.gov/nco/

DRAFT REGULAR MEETING WRITTEN SUMMARY FOR VIDEO RECORD
TUESDAY, SEPTEMBER 16, 2025 at 7:00 P.M.
MILILANI MAUKA ELEMENTARY SCHOOL **–** 95-**1111 MĀKAʻIKAʻI STREET, MILILANI, HI 96789**
AND VIA WEBEX

Video recording of this meeting can be found at: https://www.youtube.com/watch?v=QN7wHZk_qcY

Reports & other meeting materials can be found at:
https://drive.google.com/drive/folders/1n1MZSzt3NC1_zPbcl7bW52pWK8B8UisO?usp=sharing

I. CALL TO ORDER **–** [0:00:10]: 7:00 p.m.

Chair Dean I. Hazama called the meeting to order at 7:00 p.m.; Quorum was established with eight (8) members present. Note – This nine (9) member Board requires five (5) members to establish a quorum and to take official Board action.

Board Members Present: Dana Agader, Dean Hazama, Theresa Kuehu, Steven Melendrez, Susan Miyamoto, Stanton Oishi, Alice Rogers, and Keith Tamashiro.

Board Members Absent: Dave Fields.

Guests: Lieutenant D. Oliver and Sergeant J. Yoshioka (Honolulu Police Department); Steven Norstrom (Honolulu Board of Water Supply); Lieutenant Colonel Melander (Military Representative); Deputy Director Carrie Castle (Mayor Rick Blangiardi); Cheri Nakamura (Hawaii School Facilities Authority); Karen Arakawa and Lacy Shimabukuro (Pacific Housing Assistance Corporation); Paula Bender (Walk, Bike, Drive Program); Gil Riviere (Kūpaʻa Kaʻala Alliance); Ross Isokane (Empty Homes Coalition); Sierra Martin (Kealahou West Oʻahu); Aaron Wilson (Councilmember Val Okimoto); Kelly Anaya (Councilmember Matt Weyer); Charles Miller (Senator Donovan Dela Cruz); Representative Lauren Matsumoto (State House District 38); Representative Amy Perruso (State House District 46); Tosa Lobendahn (Representative Trish La Chica); Casey Abe (Department of Transportation Highways Division); Scout BSA Troop 664; Keith C., Daniel M. Gabriel, (Resident); Camilia Epa Gomes (Neighborhood Commission Office). Note: Name was not included if not legible. There were 29 total participants.

II. PRESENTATION OF THE COLORS & PLEDGE OF ALLEGIANCE – [0:00:15]: Scout BSA Troop 664 led the Pledge of Allegiance.

III. MEETING DECORUM – [0:01:53]: Vice Chair Keith Tamashiro recited the rules of speaking.

IV. MONTHLY REPORTS – [0:02:50]

Honolulu Fire Department (HFD) – [0:02:50]: No representative present at this time. A report has been submitted.

- Report: https://drive.google.com/file/d/1vn3pPwfEiSBjVVeWhsEVsWL0Lkwmf2wD/view?usp=drive_link

Honolulu Police Department (HPD) – [0:02:53]: Lieutenant D. Oliver with Sergeant J. Yoshioka from District 2 Wahiawa Station provided the report and highlighted the following:

- September 1-15, 2025 Statistics: 1 assault, 3 burglaries, 0 robberies, 2 car break-ins, and 120 calls for service.
- Safety Tip: Traffic fatalities on Oʻahu have doubled in 2025 with 60 lives lost compared to 30 at the same time in 2024. HPD urges motorists to remain attentive while driving and refrain from using mobile electronic devices.
- HPD Data Dashboard: Microsoft Power BI
- Crime Mapping: https://www.crimemapping.com/

Board of Water Supply (BWS) – [0:04:15]: Steven Norstrom provided the report and highlighted the following:

- Main Breaks: No main breaks in the district last month.
- General Announcement: "Imagine a Day Without Water" event will be at Windward Mall on Saturday, September 20, 2025 from 10:00 a.m. to 2:00 p.m., featuring interactive displays from over 20 city, state, and community organizations; a rain barrel workshop with a giveaway of a 45-gallon rain barrel.
- Report: https://drive.google.com/file/d/1sIcDD7IfTBhYZkdP0eK3MPkkHtKgBswi/view?usp=drive_link
- Event Flyer: https://drive.google.com/file/d/1YPJ9TUf180vZOiGeXhRsuk-58aWqNs9z/view?usp=drive_link

Questions, comments, and concerns followed – [0:05:00]

1. Upcoming Event: Board Member Kuehu asked about an upcoming event in Waialua. Mr. Norstrom confirmed there would be a Distater Prep Fair in Waialua on the North Shore.

Military Representative Report – [0:05:45]: Lieutenant Colonel Melander provided the report and highlighted the following:

- September Training Advisory: East Range jungle and ranger tactics from 6:00 a.m. to 6:00 p.m. weekdays, aviation training till September 5-19 from 6:00 a.m. to 6:00 p.m., and artillery/mortar/demolitions live fire training from 5:00 a.m. to midnight September 20, 27-30. https://drive.google.com/file/d/1TtmcuXW1ETWfCJW9StucWZjn0nu9f5BK/view?usp=drive_link
- Events: U.S Army Garrison Hawai'i and Survivor Outreach Services will host the Gold Star Mothers and Family Day Ceremony on Sunday, September 28, 2025 to honor the enduring sacrifice of those who have lost a loved one in military service. The event will take place at the National Memorial Cemetary of the Pacific.
- Joint Pacific Multinational Readiness Center (JPMRC) Exercise: The annual JPMRC excercise will be from November 7-16, 2025. There will be increased traffic and noise in the weeks leading up to the excercise. Residents will also experience an increase in low flying helicopters and fixed wing aircraft coming in and out of Wheeler Army Airfield.
- Job Fair: The next job fair will be at the O'ahu Veteran Center on Tuesday, October 14, 2025 from 8:30 a.m. to 2:00 p.m. Job offers and provisional hiring the day of the job fair may occur. For more information on the job fair, go to: https://www.himwr.com
- Community Concern Hotline: (808) 787-1528 or email usag.hawaii.comrel@army.mil

V. BOARD BUSINESS – [0:08:53]

Update on Affordable Housing Project at Mililani High School – [0:09:00]: Cheri Nakamura from the Hawaii School Facilities Authority (HSFA) with Karen Arakawa (Director of Pacific Housing Assistance Corporation) and Lacy Shimabukuro (Project Manager) provided an update and highlighted the following: selection of Site B by the athletic fields (outlined in red on the presentation slide); Pacific Housing Assistance Corporation, a nonprofit developer with over 40 years of experience, will oversee the Environmental Assessment (EA) process beginning next month October 2025; the EA will address issues such as traffic, flora and fauna, archaeological resources, impacts to cultural practices, noise, and other environmental resources; a draft EA is expected in Q1 2026 with a public meeting planned for early 2026; the project will take up 1.7 acres of the 44-acre campus.

- Presentation: https://drive.google.com/file/d/1glNrI96fNQDnkV7CSC1XlSbw00SdK9di/view?usp=drive_link
- To share feedback, please go to: www.hisfa.org/workforce-housing-new or email cheri.nakamura@hisfa.org

Questions, comments, and concerns followed – [0:12:52]

1. Public Meeting Details: Board Member Rogers asked about publicizing the public meeting. Cheri Nakamura explained they would use their community meeting contact list, school parent distribution portals, neighborhood boards, and their new Instagram account.
2. Site B Details: Board Member Kuehu asked if the new plot was larger or smaller than the first plot. Cheri Nakamura stated she wasn't sure but noted it was different and assessments were being conducted.
3. Clarification for EA Announcement: Chair Hazama mentioned receiving a letter from PBR Hawai'i and Associates regarding the EA announcement with an October 5th public comment deadline. Lacey Shimabukuro explained this was for pre-assessment outreach to area stakeholders, with another 30-day public comment period to follow when the draft EA is published.
4. Schedule: Board member Melendrez requested a published schedule for the project. Lacey Shimabukuro shared they're currently doing technical studies that consist of site visits and surveys and all updates will be provided through HSFA website as well at upcoming meetings. Cheri Nakamura agreed to provide a timeline chart to the board.
5. Parking Spaces: Anna Hudson (resident) asked about availability of parking spaces for residents. Karen Arakawa stated they have 156 parking stalls planned for the project, which is more than one per unit.

Update on Memorandum of Understanding (MOU) between Dept. of Education and City Parks and Recreation on Community Use of New Mililani Middle School Parking Lot – [0:21:00]: Chair Hazama noted he did not have an update. Tosa Lobendahn from Representative La Chica's office confirmed they had not heard anything back regarding the MOU but would follow up.

Walk, Bike, Drive Presentation – [0:21:40]: Paula Bender (Walk, Bike, Drive Coordinator) provided a presentation and highlighted the following: the Walk, Bike, Drive program is funded by a Hawai'i Department of Transportation (HDOT) grant to highlight pedestrian and bicycle safety on Hawai'i's roads; explanation of the Vulnerable Road Users Law; statistics

showing traffic fatalities have more than doubled in 2025 compared to 2024; safety tips for sharing the road with cyclists; emphasis on the reliability of bicycles during emergency weather events; and Law of the Splintered Paddle.

- To share comments or questions, please email Paula Bender at paula@hbl.org

Questions, comments, and concerns followed – [0:27:25]

1. E-bike Accidents: Board Member Rogers expressed concern about the increasing number of accidents involving e-bikes, noting that in the last ten years there have been 1,100 vehicle or traffic accidents involving e-bikes, bicycles, and motorcycles, with numbers doubling this year. She suggested that no e-bike should be allowed to anyone under 16 without a driver's license. Ms. Bender explained that the Hawai'i Bicycling League is lobbying the legislature for better laws, accountability, and education.
2. Use of Law of the Splintered Paddle: Board Member Kuehu objected to the presentation's use of the Law of the Splintered Paddle (Kānāwai Māmalahoe), stating it was taken out of context and misapplied to bicyclists. She urged the organization to consult with Hawaiian cultural experts about the proper meaning of the law.

Kamananui Project Update Presentation and Resolution – [0:33:18]:

- Presentation: Gil Riviere (Director of Keep the North Shore Country Organization) provided a presentation and highlighted the following: opposition to the Kamananui project on the slopes of the Waianae Mountains in the moku of Waialua; the developer's refusal to engage with the community despite working on the project since 2018; concerns about the conditional use permit minor approved in 2019 that was based on the project being accessory to agriculture; the developer's request to modify the permit, including reducing committed forestry acreage from 611 to 51 acres and canceling 322 acres of agroforestry; concerns about traffic safety on Kaukonahua Road; potential impacts on endangered species; and the formation of Kūpa'a Ka'ala alliance of 24 organizations opposed to the project.
- Further information can be found at: https://www.keepthenorthshorecountry.org/kamananui

Questions, comments, and concerns followed – [0:47:40]

1. Concern of Approval Prcess: Board Member Rogers expressed concern about the approval process and lack of compliance with environmental plans.
2. Assessments: Board Member Melendrez asked about the absence of environmental and cultural assessments prior to the original permit issuance, which Gil Riviere confirmed.
3. Modifications: Board Member Melendrez asked if the line items regarding modifications that were listed in the powerpoint slide are in the orginal permit issuance. Gil Riviere confirmed they were but the original design of the gondola and stations were modified since then.
4. Other Projects: Board Member Melendrez asked if the land owner has other projects in the neighbor island Maui. Mr. Riviere shared he is does not know.
5. Permit: Chair Hazama noted he had never seen a conditional use minor permit of this scale or with a provision allowing the director to change it to a major permit. He also mentioned that a joint development agreement would require city council approval.
6. Traffic Study: Board Member Rogers emphasized the need for a traffic study on Kaukonahua Road, describing heavy traffic she has observed in the area. Board Member Kuehu also shared that there has been a huge change in the community and traffic in this area from six years ago when the permit was issued.

- Resolution: Board Member Kuehu read Resolution 2025-01, requesting the City and County of Honolulu Department of Planning and Permitting deny revisions to the conditional use permit of Kaukonahua Ranch LLC's Kamananui project., LLC's Kamananui Project on the slopes of the Wai'anae Mountains in the moku of Waialua. https://drive.google.com/file/d/1zuxlTjRgeG9FTCEWywz4sGI33rgkfSix/view?usp=drive_link

[1:03:42] – Kuehu MOVED and Rogers SECONDED for Neighborhood Board No.35 to adopt Resolution 2025-01 with amendments to include additional neighborhood boards and representatives in the distribution list. Further discussion followed. Hearing no further discussion, a roll-call vote was conducted. The motion was ADOPTED; 7-0-1 (AYE: Agader, Kuehu, Miyamoto, Oishi, Rogers, Tamashiro, Hazama; NAY: None; ABSTAIN: Melendrez) – [1:09:40].

Empty Homes Tax Bill 46 Presentation and Resolution – [1:09:45]:

- Presentation: Ross Isokane from the Empty Homes Coalition provided a presentation and highlighted the following: statistics showing one in four homes sold goes to outside investors; the housing crisis causing young adults to move to the mainland or continue living with parents; the failure of the free market to build affordable units; broad public support for an empty homes tax, with 74% of O'ahu residents in favor; the tax would discourage out-of-state demand and investor speculation, return vacant units to the residential market, and generate revenue for affordable housing; the current bill includes over 15 exemptions to protect local residents.

- Resolution: Board Member Oishi read the resolution in support of establishing an empty homes tax in Honolulu. https://drive.google.com/file/d/162zB6Fl_MJJaliEL3diYgUyffzFzZHwP/view?usp=drive_link

[1:18:20] **–** Oishi MOVED and Kuehu SECONDED for Neighborhood Board No.35 to adopt the Empty Homes Tax Resolution. Hearing no further discussion, a roll-call vote was conducted. The motion was ADOPTED; 7-1-0 (AYE: Agader, Kuehu, Miyamoto, Oishi, Rogers, Tamashiro, Hazama; NAY: Melendrez; ABSTAIN: None) – [1:19:06].

VI. RESIDENT/COMMUNITY CONCERNS – [1:19:12]: No concerns at this time.

VII. ELECTED OFFICIALS – [1:19:20]

Office of Governor Josh Green – [1:19:20]: No representative present.

- Newsletter: https://drive.google.com/file/d/1tH3HUzQpPh_ztH2vybF9W06TD2D86uO5/view?usp=drive_link

Office of Congressman Ed Case – [1:19:25]: No representative present.

Hearing no objections, Chair Hazama returned to Item VI. Resident/Community Concerns.

VI. RESIDENT/COMMUNITY CONCERNS – [1:19:45]

Homeless Outreach – [1:19:45]: Sierra Martin from Kealahou West Oʻahu (KWO) Homeless Outreach introduced herself and highlighted the following: KWO is assigned to specific districts on Oʻahu, handling North Shore, Waialua, Mokulēʻia, and Haleiwa on Mondays; Wahiawā, Mililani, and Waipiʻo on Tuesdays; Waipahū on Wednesdays; and Pearl City and ʻAiea on Thursdays. Ms. Martin noted that KWO is aware of the growing homeless population in the Mililani community, particularly in the Kipapa Gulch area and have been working alongside with Representative Trish La Chica to address this area. Outreach teams have noted possible encampments that are further inside the gulch. KWO is seeking for male volunteers to help with safety purposes of an all female outreach team to provide help for homeless inside the gulch. KWO has received calls from the community and assistance is being provided to homeless individuals in the Mililani Town Center parking lot, noting four vehicles they addressed and have not received any reports of them returning. The public is free to call KWO to report any homeless and noted that the KWO program requirements include being unsheltered or at risk of eviction within 14 days.

Questions, comments, and concerns followed – [1:24:36]

1. Organization: Board Member Melendrez asked about the organization's name and funding. Ms.Martin restated the name of the organization, shared their office is located in Kapolei and that theyʻre a mobile outreach. Ms. Martin also shared that KWO is funded by the State Homeless Programs Office (HPO) and Statewide Office on Homelessness and Housing Solutions (SOHHS)
2. Service Area: Board Member Kuehu asked if their service area includes all of Mililani, including Mililani Mauka. Sierra Martin confirmed they cover the entire scope of Mililani.

Hearing no objections, Chair Hazama returned to the regular order of the agenda.

VII. ELECTED OFFICIALS **–** [1:26:00]

Office of Mayor Rick Blangiardi – [1:26:05]: Deputy Director Carrie Castle (City Department of Budget and Fiscal Services) provided the report and highlighted the following:

- Mayor's Newsletter Highlight: Announcement that the second segment of Skyline will open on Thursday, October 16, 2025, including Pearl Harbor, Airport, Lagoon Drive, and Middle Street stops.
- Mililani Mauka Emergency Road Follow-up: The Department of Emergency Management, Honolulu Police Department, and Honolulu Fire Department have access to the road and will open it during emergencies. The Hawaiʻi Department of Transportation and City Department of Transportation Services are collaborating on an agreement regarding responsibilities for the emergency road, including signage.
- Mililani Mauka Road Repaving Project Follow-Up: Root pruning is being performed within the project limits, but not along Meheula Pkwy, which is outside the project scope. Ms. Castle shared she would reach out to the respected department to address the de-rooting in the requested area.
- Memorandum of Understanding (MOU) between DOE and DPR on Use of Mililani Middle School Parking Lot: Ms. Castle shared at the moment, the consensus is no further information to report as DPR and DOE continue discussion.
- Newsletter: https://drive.google.com/file/d/17xt8R1dIE5-LUyClLPU24p_GEPIadLL0/view?usp=drive_link

Questions, comments, and concerns followed – [1:30:45]

1. Emergency Access Road Signage: Board Member Melendrez asked about signage for the emergency access road. Carrie Castle explained that the state and city are working on an agreement regarding appropriate signage.
2. No Parking Signage: Board Member Kuehu noted there is an existing "No Parking" sign near the emergency access gate that is damaged and not enforced, causing vehicles to block access. Ms. Castle shared she would relay the issue to DTS and follow-up at next month's board meeting.
3. Park-and-Ride Lots: Chair Hazama asked about Skyline's policy prohibiting overnight parking in park-and-ride lots, questioning the incentive for people to use Skyline to the airport if they can't leave their cars overnight. Carrie Castle agreed to look into this issue.

Office of Councilmember District 8, Val Okimoto – [1:35:30]: Aaron Wilson provided the report and highlighted the following: Bills 49 and 50 passed second reading, which would increase the property tax homeowners exemption by $20,000; Resolution 205 passed to rename the Pearl City District Pool to the Ken Sunagi Pearl City District Pool; update on the rehabilitation of localized streets Phase 24 BCD and E; DTS response to speeding concerns along Meheula Parkway between Lehiwa Drive and Kapanoe Street, with plans to narrow the streets to reduce speeding.

Office of Councilmember District 2, Matt Weyer – [1:37:10]: Kelly Anaya provided the report and highlighted the following: appreciation for the joint meeting on the gondola project in July, which had over 150 residents in attendance; reminder of real property tax deadlines, with September 30th as the deadline to file for home exemption; information about the real property tax credit which caps property tax at 3% of homeowner's income for households making $80,000 or less; announcement of mobile district office hours at Wahiawā District Park Hale Koa Room on Friday, October 3rd from 10:00 a.m. to 12:00 p.m.

- Newsletter: https://drive.google.com/file/d/1DU7VzRTlUl1rTQAJjlx386Oxh3DF9gJX/view?usp=drive_link

Questions, comments, and concerns followed – [1:39:08]

1. Kamananui Project: Board Member Rogers asked if Kelly had heard their discussion on the gondola project. Kelly confirmed she had and thanked the board for passing the resolution, noting that Wahiawā Neighborhood Board had passed theirs the previous night.
2. Talk Story Event: Daniel Gabriel (resident) asked for the date and time of the upcoming Talk Story event with Councilmember Matt Weyer. Ms. Anaya shared it will be on Friday, October 3, 2025 from 10:00 a.m. to 12:00 p.m. at the Wahiawā District Park Hale Koa Room.

Office of Senator District 17, Donovan Dela Cruz – [1:40:39]: Charles Miller provided the report and highlighted the following: Senator Dela Cruz attended the Straub Mililani Clinic urgent care blessing and staffed the food drive at Mililani Town Center; update that the H2 metal plate repair was completed on Monday, August 11, 2025.

Office of Representative District 38, Lauren Matsumoto – [1:41:25]: Representative Matsumoto provided the report and highlighted the following: partnership with HPD for events at schools to encourage drivers to slow down; attendance at the Straub urgent care opening; recognition of Mililani's 2025 summer reading grand prize winner; recap of the listening tour held at five locations across Oʻahu, where cost of living, crime and public safety, and government transparency were the top three concerns at every location; announcement of the Capitol Talk & Tour on Wednesday, October 9th from 10:00 a.m. to 12:00 p.m. at the State Capitol; distribution of the 2026 pre-session survey; upcoming events including the Mililani YMCA Trunk & Treat on Saturday, October 25, 2025 and a "Chiefs at War" event at Mililani Public Library on Monday, September 29, 2025 from 5:30 to 6:30 p.m.

- Newsletter: https://drive.google.com/file/d/1o_5OUwXrd-w4NUfLOVXbU4v96IJAFW21/view?usp=drive_link

Office of Representative District 46, Amy Perruso – [1:47:14]: Representative Perruso provided the report and highlighted the following: appreciation for the board passing the resolution opposing the gondola project; preparation of legislation for a possible special session; onboarding as a recently appointed member of the finance committee; participation in site visits on Kauaʻi and attendance at the Hawaiʻi State Association of Counties meeting in Kona; work with the data task force to break down silos between different levels of government; upcoming attendance at the Schools of Democracy Conference with Justice Gonoza, the superintendent, and five principals including Principal Murphy from Mililani High School; announcement of Day at the Lake on Saturday, September 27, 2025 at Lake Wilson; Camp Mokuleia party on Sunday, September 28, 2025; community forum on the politics of wellness and resilience at Wahiawa Elementary on Tuesday, September 30, 2025; focus on energy affordability legislation to address the cost of living crisis.

- Newsletter: https://drive.google.com/file/d/11zOtbja299KuEjujJC1ycpPzIB8NVtDR/view?usp=drive_link

Office of Representative District 37, Trish La Chica – [1:52:03]: Tosa Lobendahn provided the report and highlighted the following: Representative La Chica is participating in the Future Caucus Energy and Innovation Fellowship Conference in

Santa Fe, New Mexico; distribution of the latest newsletter and District 37 survey, with approximately 350 responses received since mid-August; coordination with military and state to clean up trash in Kipapa Gulch; announcement of a community tour at the Hawai'i Agrovoltaic Research Site at Clearways Mililani Solar Farm on Wednesday, October 1, 2025 from 9:00 a.m. to 12:00 p.m., with space limited to 20 participants.

- Newsletter: https://drive.google.com/file/d/1CyMDFRSeRJ4yUZDuZddnkHvEMhBTL4Dm/view?usp=drive_link

Questions, comments, and concerns followed – [1:55:00]

1. Chair Hazama asked Tosa Lobendahn to have Representative La Chica follow up with DOE on the middle school parking lot MOU. Ms. Lobendahn confirmed it is currently with DOE and she would ask about the timeline for completion.

State Department of Transportation, Casey Abe – [1:55:30]: Casey Abe provided the report and highlighted the following: maintenance crews cut back overgrowth and removed graffiti along H2 freeway; correction of a directional sign for the Wahiawa park and ride facility; installation of a new light standard on H2 freeway southbound before the Mililani offramp; repair of the expansion joint on H2 freeway northbound approaching the Launani Valley offramp; installation of the first of ten noise cameras on H3 freeway at the Halekou Interchange (junction with Kamehameha Hwy) as part of a two-year $2.5 million pilot program (authorized in Act 63[23]) to gather data on vehicle noise; changes to safety improvements at on and off ramps, with speed tables to be installed before existing crosswalks instead of raised crosswalks; plans to increase lighting wattage from 78W to 115W; installation of rectangular rapid flashing beacons at crosswalks; speed tables construction expected to begin before the end of September and be completed in October.

- For questions or concerns, please attach photos or google map location to casey.abe@hawaii.gov

Questions, comments, and concerns followed – [2:02:36]

1. Board Member Rogers thanked Casey for lowering the steel plate on H2 toward Wahiawa and for addressing a significant bump across from McDonald's on Meheula Parkway.
2. Board Member Kuehu expressed concern about the use of speed tables on freeway off-ramps, noting that federal highway administration and safety experts recommend other engineering elements instead. She urged DOT to research best practices from similar communities.
3. Chair Hazama asked about ongoing work on H2 southbound before the H1/H2 interchange. Casey Abe said he would look into it and provide information.

VIII. APPROVAL OF BOARD MEETING MINUTES – [2:05:56]

Tuesday, July 15, 2025, Regular Meeting Written Summary for Video Record – [2:05:56]: Secretary Miyamoto noted a correction to be made. Hearing no objections, the Tuesday, July 15, 2025 Regular Meeting Written Summary for Video Record were approved with ammendments; 8-0-0 (Aye: Agader, Kuehu, Melendrez, Miyamoto, Oishi, Rogers, Tamashiro, Hazama; Nay: None; Abstain: None) – [2:06:40].

IX. REPORTS – [2:06:43]

Committees – Education – [2:06:43]: Committee Chair Melendrez provided the report on Mililani Middle School and highlighted the following: important dates including September 17th (no school), 19th (leadership field trip), 20th (volleyball), 22nd (school bus online application period opens), 23rd-25th (various activities), 26th (picture taking), 27th (volleyball vs. Wahiawa), October 2nd (picture retakes and field trip to Schofield Bowl), October 3rd (end of quarter one and middle school cross country championships).

- Report: https://drive.google.com/file/d/1tZvnK0XdgvyCx45F7YiRiLbnc-XiWrs1/view?usp=drive_link

Committees – Military and Civil Defense – [2:08:52]: No report at this time.

Committees – Parks and Recreation – [2:08:54]: No report at this time.

Committees – Planning, Permitting and Zoning – [2:08:58]: No report at this time.

Committees – Transportation – [2:09:00]: No report at this time.

Committees – Recognition and Service Awards – [2:09:03]: No report at this time.

X. ANNOUNCEMENTS – [2:09:11]

Next Meeting – [2:09:15]: The next Mililani Mauka/Launani Valley Neighborhood Board will be held on Tuesday, October 21, 2025 at 7:00 p.m. at Mililani Mauka Elementary School and via WebEx.

XI. ADJOURNMENT – [2:09:21]: The meeting was adjourned at 9:09 p.m.

Submitted by: Camilia Epa Gomes, Neighborhood Assistant, NCO
Reviewed by: Dylan Whitsell, Deputy, NCO
Finalized by: Susan Miyamoto, Secretary, Neighborhood Board No.35

MILILANI MAUKA/ LAUNANI VALLEY NEIGHBORHOOD BOARD NO. 35
NEIGHBORHOOD COMMISSION • 925 DILLINGHAM BOULEVARD SUITE 160 • HONOLULU, HAWAII, 96817
TELEPHONE: (808) 768-3710 • FAX: (808) 768-3711 • INTERNET: https://www8.honolulu.gov/nco/

REGULAR MEETING AGENDA
TUESDAY, NOVEMBER 18, 2025, at 7:00 p.m.
MILILANI MAUKA ELEMENTARY SCHOOL
95-1111 MAKAIKAI STREET, MILILANI HI 96789 AND
VIA WEBEX

WebEx Link: https://cchnl.webex.com/cchnl/j.php?MTID=mda311055081761002939 0c6f72decace
Meeting number / Access Code: 2490 158 5754
Password: NB35 (6235 from phones and video systems)
Join by phone: +1-408-418-9388 (United States Toll)

Meeting Materials Link: https://drive.google.com/drive/folders/1zCauqWgTX4syd8vO3Ci5UCL_ePiRXlbE
Video Recordings: http://www.youtube.com/@NeighborhoodCommissionOffice

Rules of Speaking: Anyone wishing to speak is asked to raise their hand, and when recognized by the Chair, to address comments to the Chair. All dialogue at the meeting will be conducted by use of the microphone. Those joining the meeting on WebEx are reminded to mute their speakers until they wish to be recognized by the Chair. Anyone not following these rules will be ruled out of order by the Chair. Those providing Presentations to the Board are encouraged to do so via a PowerPoint presentation, with a projector and provide handouts for the board and the community. The public concerns and comments are limited to three (3) minutes each. Please silence all electronic devices.

Note: The Board may take action on any agenda item. As required by the State Sunshine Law (HRS 92), specific issues not noted on this agenda cannot be voted on, unless allowed for under HRS 92. A two-thirds (2/3) vote (5) of this 9- member Board is required to meet quorum requirements.

I. **CALL TO ORDER:** Chair Dean I. Hazama

II. **PRESENTATION OF THE COLORS & PLEDGE OF ALLEGIANCE:** Scouts BSA Troup 664

III. **MEETING DECORUM:** Vice Chair Keith Tamashiro

IV. **MONTHLY REPORTS**

A. Honolulu Fire Department (HFD)

B. Honolulu Police Department (HPD)

C. Board of Water Supply (BWS)

D. Military Representative Report

V. **BOARD BUSINESS**

A. Update on Memorandum of Understanding (MOU) between DOE and C&C Parks on Community use of the Mililani Middle School Parking Lot.

B. Update on Affordable Housing Project at Mililani High School – Cherri Nakamura (HISFA)

VI. **RESIDENT/COMMUNITY CONCERNS:** Any community member can come forward and express any comment or concern within decorum. Please, limit your comments to three (3) minutes each per issue for items not on the agenda.

VII. **ELECTED OFFICIALS**

A. Office of Governor Josh Green – Melanie Martin

B. Office of Congressman Ed Case – Nestor Garcia

C. Office of the Mayor Rick Blangiardi – Carrie Castle

D. Office of Councilmember District 8, Val Okimoto

E. Office of Councilmember District 2, Matt Weyer

F. Office of Senator District 17, Donovan Dela Cruz

G. Office of Representative District 38, Lauren Matsumoto

H. Office of Representative District 46, Amy Perruso

I. Office of Representative District 37, Trish La Chica

J. State Department of Transportation – Casey Abe

VIII. APPROVAL OF BOARD MEETING MINUTES: Tuesday, October 21, 2025, Regular Meeting Minutes

IX. REPORTS

A. Committees

a) Education – Steven Melendrez

b) Military and Civil Defense – Keith Tamashiro

c) Parks and Recreation – Susan Miyamoto

d) Planning, Permitting and Zoning – Stanton Oishi & Dana Agader

e) Transportation – Dean Hazama

f) Recognition and Service Awards – Alice Rogers

X. ANNOUNCEMENTS

A. The Mililani Mauka/Launani Valley Neighborhood Board will be in recess in December 2025. Our next meeting will be held on Tuesday, January 20, 2026, at 7:00 p.m. at Mililani Mauka Elementary School, and via WebEx.

XI. ADJOURNMENT

A map of the subdistrict boundaries is at – https://www8.honolulu.gov/nco/boards-and-sub-district-boundary-descriptions/

Capital Improvement Projects (CIP) and Budget Planning. Suggestions for projects in the Neighborhood Board district and adjacent areas are welcome at any time to prepare for planning actions and the next fiscal year.

A mailing list is maintained for interested persons and agencies to receive this board's agenda and minutes. Additions, corrections, and deletions to the mailing list may be directed to the Neighborhood Commission Office (NCO) at Kapālama Hale, 925 Dillingham Boulevard, Suite 160, Honolulu, HI 96817, by telephone on (808) 768-3710, fax (808) 768-3711, or e-mailing nco@honolulu.gov Agenda documents and minutes are also available online at https://www8.honolulu.gov/nco/

All written testimony must be received in the Neighborhood Commission Office 48 hours prior to the meeting. If within 48 hours of the meeting, written and/or oral testimony may be submitted directly to the Board at the meeting. If submitting written testimony, please note the Board and agenda item(s) your testimony concerns. Send to: Neighborhood Commission Office, 925 Dillingham Boulevard, Suite 160, Honolulu, HI 96817, fax (808) 768-3711, or email nbtestimony@honolulu.gov

If you need an auxiliary aid/service or other accommodation due to a disability or an interpreter for a language other than English, please call the Neighborhood Commission Office at (808) 768-3710 between 8:00 a.m. and 4:00 p.m. or send an email to nco@honolulu.gov at least three (3) business days before the scheduled meeting. It may not be possible to fulfill requests received after this date.

Appendix D

Employee Housing Survey Presentation

(This page intentionally left blank.)

HAWAIʻI STATE

Department of Education

Employee Housing Survey: Retention Risks and Opportunities for Workforce Housing

April 14, 2025

Tammi Chun, *Deputy Superintendent for Strategy and Administration*

HIDOE is one of Hawaii's largest employers

- 22,540 employees
- 208 job "categories" across work locations statewide
- 88% of positions are school-level

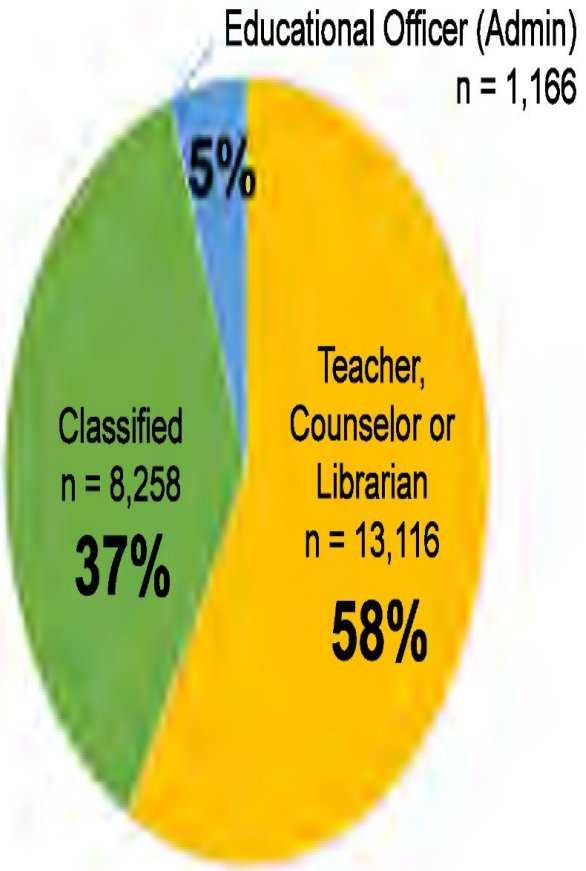

Source: HIDOE Office of Talent Management, March 1, 2024.
The HIDOE also employees about 20,000 part-time/casual employees (not included in survey).

Recruitment and retention are critical for HIDOE workforce

Top 3 reasons for leaving among 9% of full-time employees who separated in 2023-24

Teachers (n=1,213)

1. Leaving Hawaiʻi: 34%
2. Retirement: 25%
3. Family/personal: 12%

Classified (n=833)

1. Retirement: 31%
2. Non-teaching job/education: 30%
3. Leaving Hawaiʻi: 12%

Source: HIDOE Employment Report, 2023-24

Educational Officers (n=83)

1. Retirement: 48%
2. Non-teaching job/education: 22%
3. Leaving Hawaiʻi: 19%

SECTION

A

Survey and respondents

Employee Housing Survey

- **Objective**: Understand the impact of housing on Hawaiʻi State Department of Education (HIDOE) employees to inform discussions and planning regarding:
  - Workforce housing for HIDOE employees
  - Recruitment and retention strategies
- **Conducted April 2024 by** SMS Hawaiʻi with support from Castle Foundation. Additional analyses by AE Consulting.
- **Response rate**: 9,668 employees (43% of HIDOE's full time employees)

AE Consulting

SMS

April 2024 survey collected data about relationship between housing and retention

To understand employees' current housing situations	To assess employees' interest in workforce housing ("demand")
Costs	Level of interest
Living arrangements	Characteristics of interested employees
Homeownership status	Desired amenities
Anticipated duration of current housing situation	Preferred locations/Zip Codes

High survey response rate statewide and for each county

9,668 full-time employees completed the survey; 43% response rate

Geographic distribution

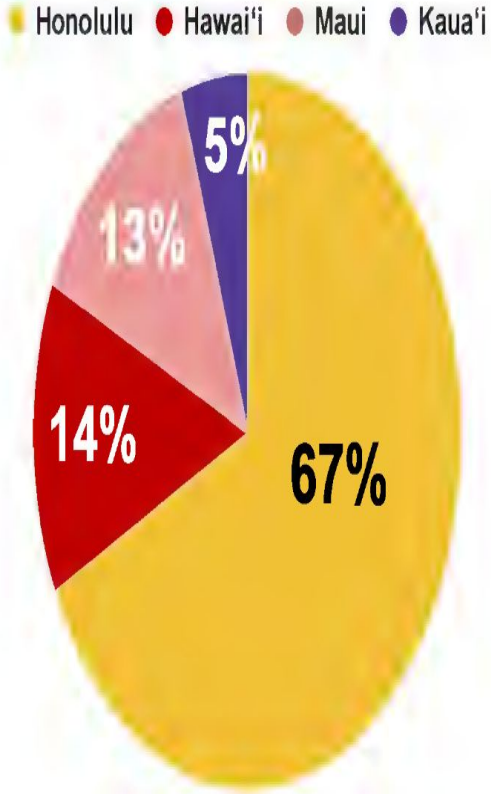

Demographics

Gender	78% Female	22% Male
Median age	47	

Employment

School-level personnel	87%
Median monthly pay	$5,718
Median years in HIDOE	10 years
Have a part-time job	34%

SECTION

B

Employees' current housing situations

35% of employees are "cost-burdened" by housing

- Both homeowners and renters are cost burdened.
- Cost-burdened employees are likely to identify as a retention risk.
- Employees with less than 5 years of service are more likely to be
  - Cost-burdened: 43%
  - Retention risks: 49%

Cost-burdened: Paying more than 30% of income for housing

Employees' median housing contribution is $1,500/mo

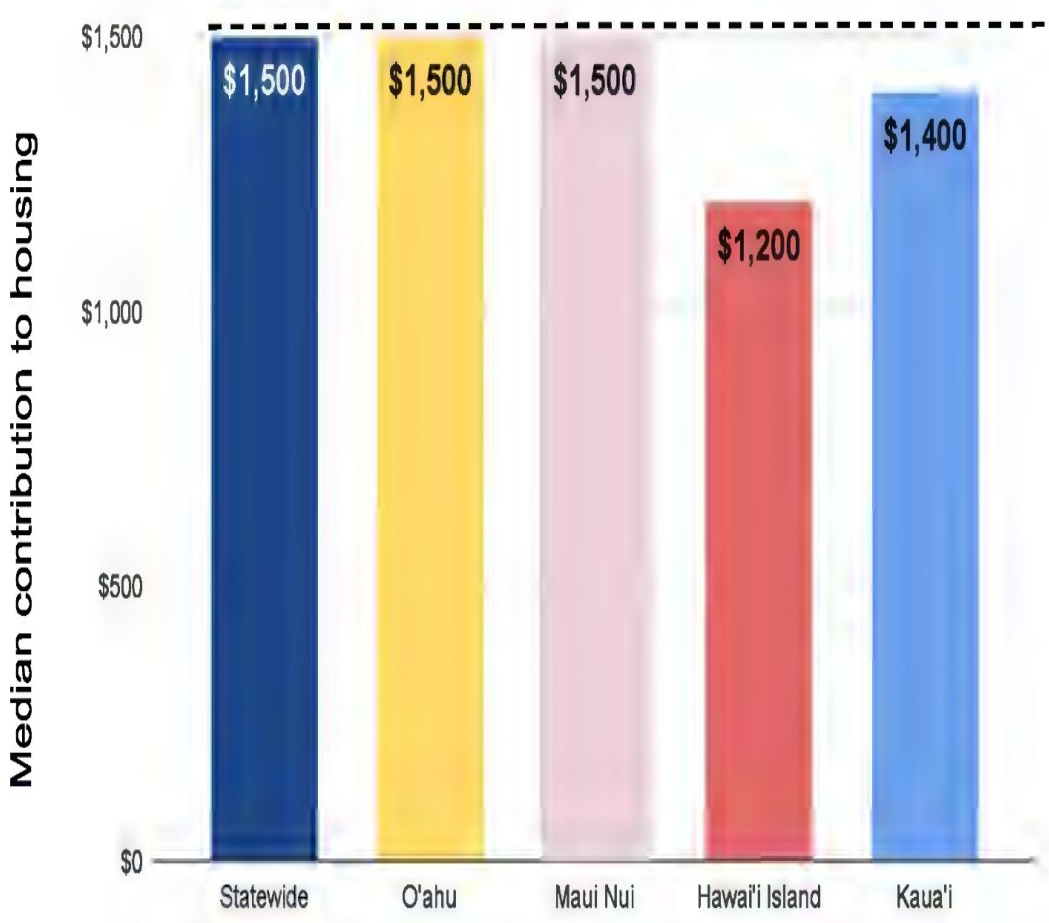

41% share housing costs with others in their household

Half of employees own their residences

Employee homeownership status

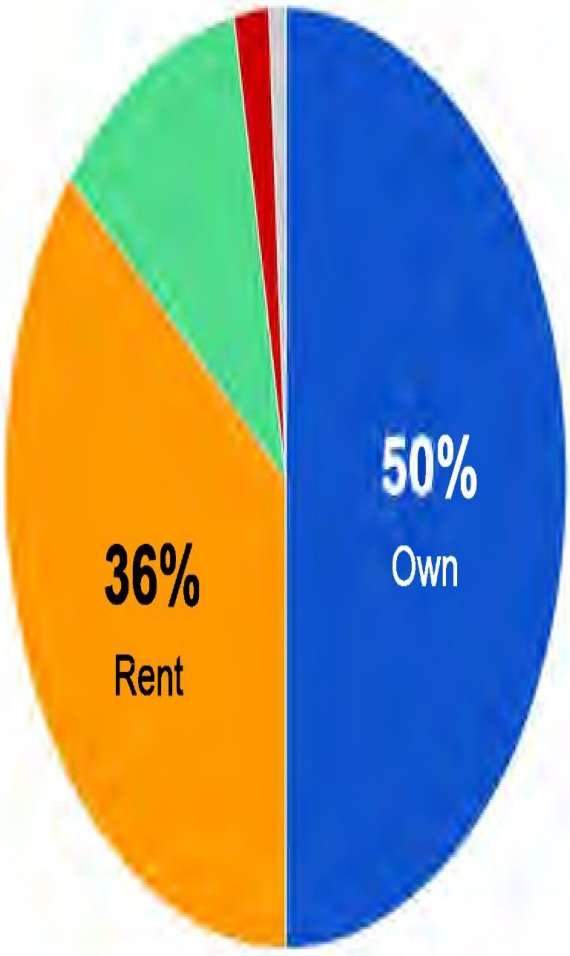

- 50% – Own (including Hawaiian Homestead)
- 36% – Rent (including military)
- 11% – No Cost (including live with family or friends, contribute to utilities, work swap)
- 2% – Don't Know (insufficient info provided)
- 1% – Insecure (including temp housing for Lahaina employees)

HIDOE employee homeownership is lower than state average of 62%.

Housing costs create "retention risk"

41% of HIDOE employees are likely to leave their job because of housing costs ("retention risk")

Predictors of retention risk:

- Not being a homeowner
- Having a part-time job
- Began HIDOE employment within last 5 years
- Being cost-burdened
- Not living in preferred zip code
- Living in Maui County

"I have always felt that public school employees should have housing allowances similar to that of the military, especially in Hawai'i due to the high cost of living."

"I would be interested in a monthly housing subsidy based on my current salary /years of service. (It) would make a considerable difference in whether or not I stay in the DOE and/or retire later."

Most employees commute 30 minutes or less

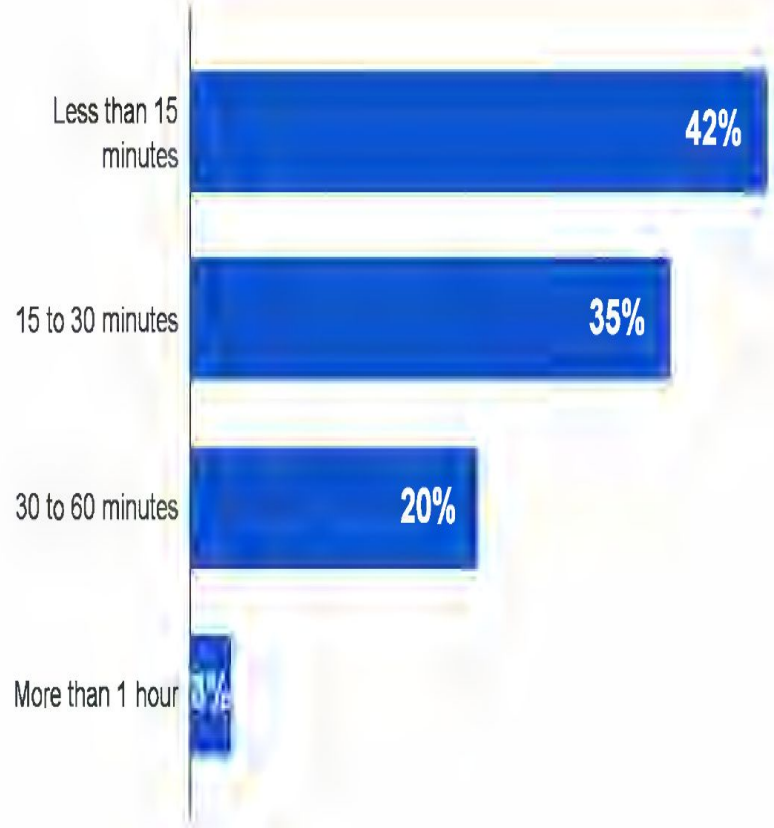

77% of employees have an average commute time of 30 minutes or less from home to work

Many non-homeowner employees anticipate changing their housing situation within the next three years

	Homeowners	Non-homeowners
Anticipate changing their housing situation	10%	31%
Likely to purchase a home/housing unit	15%	22%
Likely to move to a different rental	5%	38%
Likely to move out of Hawaiʻi	13%	28%

SECTION

C

Employees' "demand" for workforce housing

High interest in employee rental housing

54% are interested in employee rental housing

Characteristics associated with interest in housing

- Non-homeowners
- Identify as retention risk
- Began HIDOE employment within the last 5 years
- Teachers and Classified Staff are significantly more likely to be interested than School Administrators/Educational Officers
- Not living in preferred zip code

75%

of non-homeowners would consider signing a lease for workforce rental housing

Staff housing preferences

Among employees interested in workforce housing

Important amenities (70% or higher response)	**Rental unit preferences**	**Highest monthly rent staff is willing to pay** (median response)
In-unit kitchen	Single Family Home 89%	Studio: $1,200
On-site laundry	Apartment/Condo: 38%	1 bedroom: $1,400
Private bathroom	Self only: 18% 2 people: 29% 3 or more: 53%	2 bedroom: $1,800
Proximity/commute to workplace	Desire 2 Bedroom or Larger	3 bedroom: $2,000
Parking	Pets: 54%	

Location of employees' housing interest

Among employees with interest in workforce rental housing

Percent of staff by island choosing this Zip Code

Highest interest in Honolulu, Mililani, Windward O'ahu, West O'ahu, and Hilo

Location of employees' housing interest

County of Hawaiʻi & County of Kauaʻi

Island	Town	Rank*
Hawaiʻi	Hilo	1
Hawaiʻi	Kailua Kona	2
Hawaiʻi	Keaʻau	3
Hawaiʻi	Waimea	4
Hawaiʻi	Kealakekua	5

Island	Town	Rank*
Kauaʻi	Lihuʻe	1
Kauaʻi	Kapaʻa	2
Kauaʻi	Kalāheo	3
Kauaʻi	Kōloa	4
Kauaʻi	Kīlauea	5

Town is based on zip code

*Rank considers number of employees who expressed preference for this town and the intensity of their preference

Location of employees' housing interest

Oʻahu

Island	Town	Rank*
Oʻahu	Mililani	1
Oʻahu	Kāneʻohe	2
Oʻahu	Kapolei	3
Oʻahu	Kaimukī, Kahala	4
Oʻahu	ʻEwa Beach	5
Oʻahu	Waipahu	6
Oʻahu	Mānoa	7
Oʻahu	Kailua	8
Oʻahu	Pearl City	9
Oʻahu	ʻAiea	10

Town is based on zip code
*Rank considers number of employees who expressed preference for this town and the intensity of their preference

Location of employees' housing interest

Maui County (by island)

Island	Town	Rank*
Maui	Wailuku	1
Maui	Kīhei	2
Maui	Lahaina	3
Maui	Makawao	4
Maui	Kahalui	5

Island	Town	Rank*
Molokai	Kaunakakai	1
Molokai	Hoʻolehua	2
Molokai	Kualapuʻu	3
Molokai	Maunaloa	4
Lānaʻi	Lānaʻi City	1

Town is based on zip code

*Rank considers number of employees who expressed preference for this town and the intensity of their preference

Employee rental housing likely to increase retention

Among all respondents

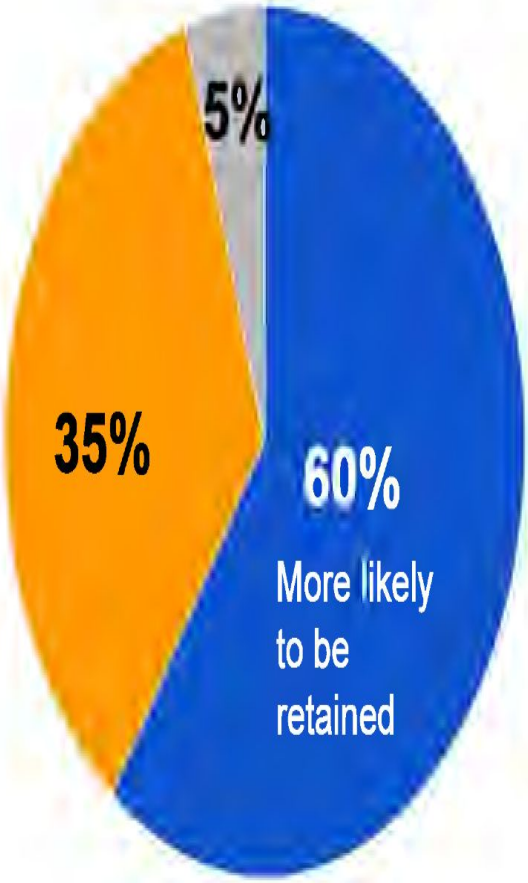

- More likely to be retained
- No effect
- Less likely to be retained

Likelihood of being retained is even higher for:

- **Employees who are retention risks: 74%**
- **Non-homeowners: 80%**

SECTION

E

Conclusions and next steps

Conclusions

- Retention of DOE workforce is at risk because of housing costs.
- Housing assistance could improve retention.
- Potential housing solutions include
  - Programs to assist with homeownership.
  - Rental housing for employees.
- Need to consider retention at workplace (e.g., school), not just continued employment within DOE.

Recommendations

- **Communicate**: Inform policymakers and partners about educators' demand for workforce housing
- **Engage**: Collaborate with state agencies and developers on workforce housing initiatives
- **Consider policies**: Consider support for homeownership as well as rental housing or other housing assistance
- **Plan**: Incorporate information in planning for employee recruitment and retention.

(This page intentionally left blank.)

Appendix E

Terrestrial Flora and Fauna Assessment

(This page intentionally left blank.)

AECOS No. 1903

Terrestrial flora and fauna assessment for Mililani High School Teacher Workforce Housing Mililani, Oʻahu

AECOS Inc.
45-939 Kamehameha Highway
Suite 201
Kāneʻohe, Hawaiʻi 96744

October 3, 2025

Terrestrial flora and fauna assessment for Mililani High School Teacher Workforce Housing Mililani, Oʻahu

October 3, 2025 *AECOS* No. 1903

Colleen Lawlor, Flor Muciño, and Eric Guinther
AECOS Inc.
45-939 Kamehameha Highway, Suite 201
Kāneʻohe, Hawaiʻi 96744
Phone: (808) 234-7770 Fax: (808) 234-7775 Email: colleen@aecos.com

Introduction

The Pacific Housing Assistance Corporation (PHAC), supported by the Hawaiʻi School Facilities Authority (HISFA), has proposed to develop teacher workforce housing at a site near the southwest corner of the Mililani High School (MHS) campus (the "Project"). The Project also includes a new 8-inch sewer line (sewerage) to connect the new housing development to an existing 21-inch sewer line beneath Meheula Parkway. *AECOS*, Inc. was contracted by PBR HAWAII & Associates, Inc. to conduct a terrestrial biological survey of flora and fauna within the Project site[1] (Figure 1).

Site Description

The main Project site encompasses 1.69 ac of land (TMK: 9-5-001:054 [por] and 9-5-001:017 [por]) located near the athletic fields on the MHS campus. The proposed sewerage route goes south from the main site then west along Meheula Parkway to the intersection with Kamehameha Highway. The Project area currently includes a parking lot on the east and a cultivated garden on the west, both surrounded by maintained grassy areas (Figures 3 and 4). The sewerage line route is approximately 1000 linear feet (LF), mostly within Meheula Parkway (Figure 2).

[1] This report was prepared for PBR HAWAII & Associates, Inc. and is intended to become part of the public record by incorporation into an EA for the subject project.

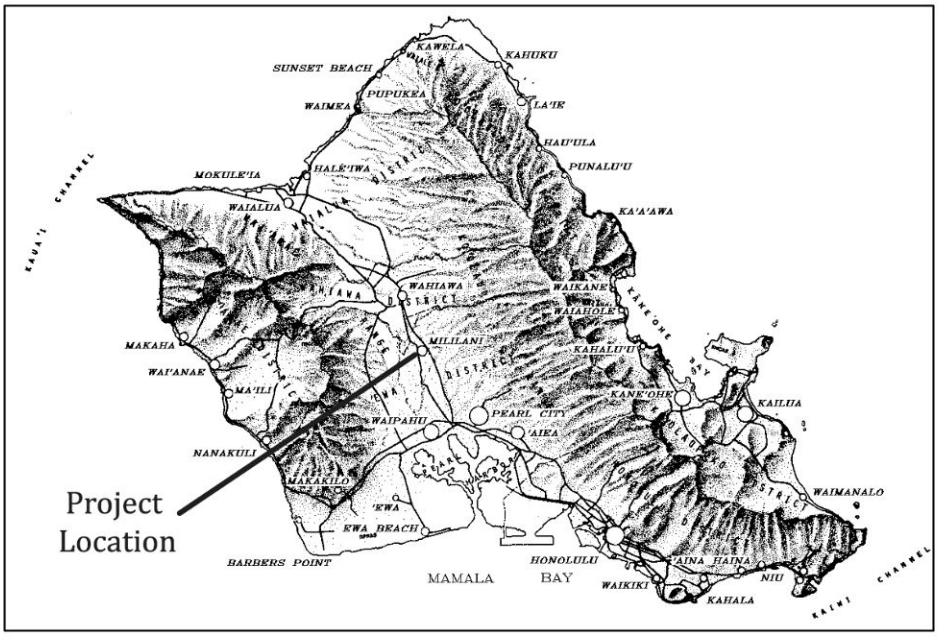

Figure 1. Project location in Mililani on the Island of O'ahu.

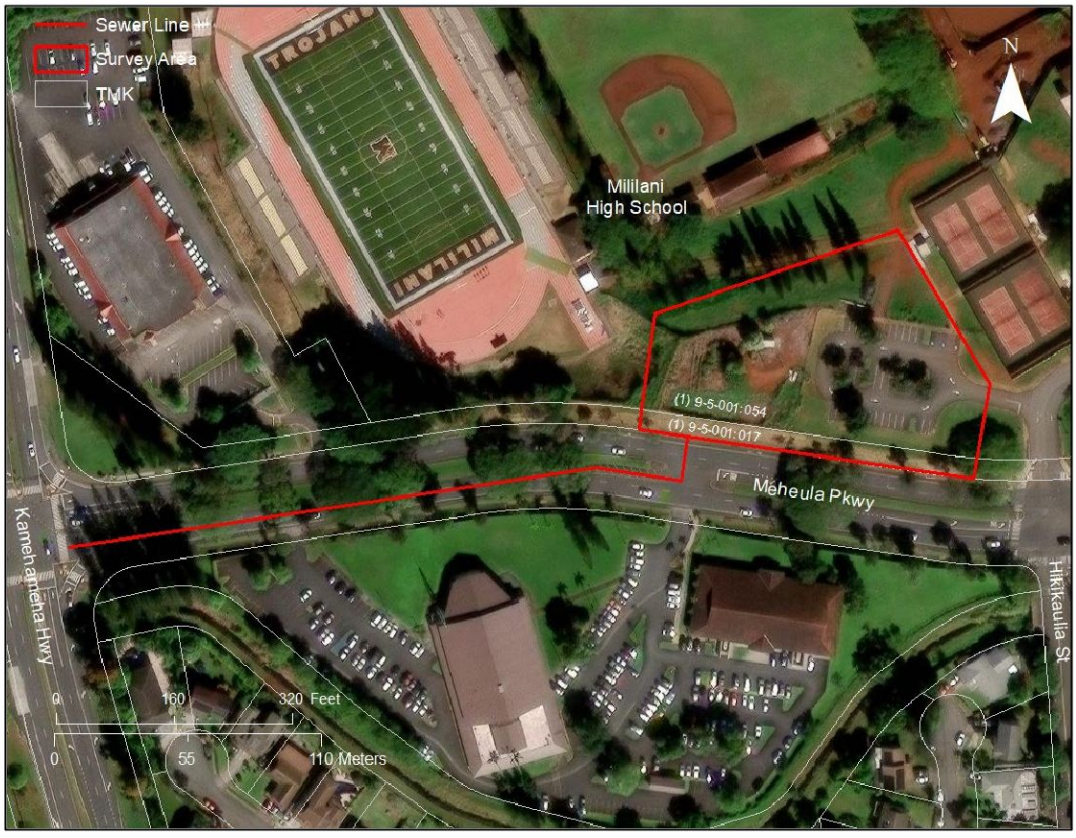

Figure 2. Map of the survey area on the Mililani High School campus and the proposed sewerage route on Meheula Parkway.

Figure 3. Grassed area surrounding a parking lot with scattered trees.

Figure 4. Okra planted in the garden area.

Methods

Botanical Survey

AECOS biologists Colleen Lawlor, Flor Muciño, and Eric Guinther surveyed the Project area (Figure 2) on August 27, 2025. Plant species were identified as they were encountered during wandering transects that covered the survey area, and notes were taken to develop a relative abundance of each species recorded. Any plant not immediately recognized during the survey was photographed, and/or a representative feature (fruit, flower, or branch) was collected for later identification at the laboratory. Species names follow *Manual of the Flowering plants of Hawai'i* (Wagner, Herbst, & Sohmer, 1990; Wagner & Herbst, 1999) for native and naturalized flowering plants, *Hawai'i's Ferns and Fern Allies* (Palmer, 2003) and *Taxonomic and Nomenclatural Updates to the Fern and Lycophyte Flora of the Hawaiian Islands* (Ranker et al., 2019) for ferns, and *A Tropical Garden Flora* (Staples & Herbst, 2005) for ornamental and agricultural plants. More recent name changes for naturalized plant species follow Imada (2019).

Terrestrial Vertebrates Survey

Avian Survey

AECOS biologists characterized the avian assemblage at the Project site in the afternoon hours of August 27, 2025. Birds were identified by visual observations, aided by Leica 10 x 42 mm binoculars, and by listening for vocalizations. Weather conditions were ideal for avian observations, with unlimited visibility, no precipitation, moderate wind (5-10 mph), and approximately 40% cloud cover. The avian phylogenetic order and nomenclature used in this report follows the American Ornithologists' Union (AOU) *Check-List of North and Middle American Birds 2024* (Chesser et al., 2024).

Mammalian Survey

AECOS biologists recorded all mammals encountered during the survey. Indicators of mammalian presence such as tracks, scat, and other sign were noted. Mammalian phylogenetic order and nomenclature follow Pinzari et al. (2020) for Hawaiian hoary bat and *Mammal Species of the World* (Wilson & Reeder, 2005) for all other mammal species.

Results

Vegetation

A fenced garden area comprising Early Polynesian-introduced species and various fruit and vegetable plantings occupies roughly a third of the Project area. In the parking lot next to the garden, rainbow shower trees are planted on grassed islands. The area of the Project surrounding the parking lot and the garden is dominated by dry Bermuda grass (Figure 3), with several other naturalized species found throughout. Cook pines line a slope just outside the northwest edge of the Project area (Figure 5).

Figure 5. Vegetation in and around the project area: banana trees growing in the garden (right), grasses characterizing much of the Project area (center), and Cook pines just outside the Project area (left).

Flora

A listing of all plant taxa encountered during the survey is presented in Table 1. Entries are arranged alphabetically under family names and include scientific name, common name, status (i.e., native or non-native; see the legend at the end

of the table), and relative abundance within the survey area. "Status" reflects the state-wide distribution of the species.

Table 1. Listing of plants observed in the survey area.

FAMILY *Species*	Common name	STATUS	ABUNDANCE	NOTES
	GYMNOSPERMS			
ARAUCARIACEAE				
Araucaria cf. *columnaris* (G. Forst.) J.D. Hook.	Cook-pine	Nat	U	<2><3>
	FLOWERING PLANTS - MONOCOTS			
ARACEAE				
Colocasia esculenta (L.) Schott	*kalo*	**Pol**	U	<1>
ASPARAGACEAE				
Cordyline fruticosa L.	*kī*	**Pol**	R	<1>
LILIACEAE				
Allium cepa L.	onion	Orn	U	<1>
MUSACEAE				
Musa hybrid L.	*maiʻa*	**Pol**	O	<1>
POACEAE				
Cenchrus echinatus L.	common sandbur	Nat	R	
Chloris barbata (L.) Sw.	swollen fingergrass	Nat	U	
Cynodon dactylon (L.) Pers.	Bermuda grass	Nat	A	
Eleusine indica (L.) Gaertn.	wiregrass	Nat	O	
Eragrostis pectinacea (Michx.) Nees	Carolina lovegrass	Nat	C	
Megathyrsus maximus (Jacq.) B. K. Simon & W. L. Jacobs	Guinea grass	Nat	C	
Paspalum dilitatum Poir.	Dallis grass	Nat	R	
	FLOWERING PLANTS - EUDICOTS			
ACANTHACEAE				
Asystasia gangetica (L.) T. Anderson	Chinese violet	Nat	O	
ASTERACEAE (COMPOSITAE)				
Emilia fosbergii Nicolson	*pualele*	Nat	R	
Sonchus oleraceus L.	sow thistle	Nat	R	
Sphagneticola trilobata (L.) Pruski	wedelia	Nat	C	
BIGNONIACEAE				
Tabebuia heterophylla (A.P. de Candole) Britt.	pink tecoma	Orn	R	<3>
Tabebuia pallida (Lindly) Miers	pink tecoma	Orn	R	<3>

Table 1 (continued).

FAMILY *Species*	Common name	STATUS	ABUNDANCE	NOTES
CACTACEAE				
Hylocereus undatus (Haworth) Britton & Rose	night-blooming cereus	Orn	U	<1>
CARICACEAE				
Carica papaya L.	*Mīkana,* papaya	Nat	O	<1>
CONVOLVULACEAE				
Ipomoea aquatica Forssk.	ung choi	Nat	U	<1>
Ipomoea obscura (L.) Ker-Gawl.	---	Nat	O	
Ipomoea triloba L.	little bell	Nat	U	
CUCURBITACEAE				
Cucurbita moschata (Lam.) Poiret	kabocha	Orn	U	<1>
Cucurbita pepo L.	squash	Orn	R	<1><2>
Momordica charantia L.	balsam pear	Nat	U	<1>
EUPHORBIACEAE				
Aleurites moluccana (L.) Wild.	*kukui*	**Pol**	U	<1>
Euphorbia hirta L.	garden spurge	Nat	U	
Phylanthus debilis Klein ex Willd.	niruri	Nat	U	
FABACEAE				
Albizia saman F. Muell.	monkeypod	Nat	R	<3>
Cassia x*nealiae* H.S. Irwin & Barneby	rainbow shower	Orn	O	
Crotalaria incana L.	fuzzy rattlepod	Nat	R	
Leucaena leucocephala (Lam.) deWit	*koa haole*	Nat	R	
Indigofera hendecaphyla (Forssk.)	creeping indigo	Nat	U	
Phaseolus vulgaris L.	bean	Orn	U	<1>
MALVACEAE				
Abelmoschus esculentus (L.) Moench	okra	Orn	O	<1>
Malvastrum coromandelianum (L.) Garck	false mallow	Nat	O	
Sida ciliaris L.	---	Nat	C	
Sida rhombifolia L.	Cuba jute	Nat	R	
MORACEAE				
Indet. juv.	---	Orn	R	<1>
MORINGACEAE				
Moringa oleifera Lam.	*malunggay*	Orn	R	<1>
PLANTAGINACEAE				
Plantago lanceolata L.	narrow-leaved plantain	Nat	O	

Table 1 (continued).

FAMILY *Species*	Common name	STATUS	ABUNDANCE	NOTES
RUBIACEAE				
Spermacoce assurgens Ruiz & Pav.	buttonweed	Nat	U	
SOLANACEAE				
Solanum melongena L.	Japanese eggplant	Orn	O	<1>
VERBENACEAE				
Lantana camara L.	lantana	Nat	R	

Legend to Table 1.

STATUS = distributional status for the Hawaiian Islands:
- Nat - naturalized, exotic, plant introduced to the Hawaiian Islands since the arrival of the Cook Expedition in 1778, and well-established outside of cultivation.
- Orn - exotic, ornamental, or cultivated plant not naturalized in Hawai'i and not well-established outside of cultivation.
- **Pol** – species an Early Polynesian introduction before 1778.

ABUNDANCE = occurrence ratings for plants by area:

R - Rare	seen in only one location or perhaps two or three times.
U - Uncommon	seen at most in several locations.
O - Occasional	seen with some regularity.
C - Common	observed numerous times during the survey.
A - Abundant	found in large numbers; may be locally dominant.

NOTES:
- <1> - Planted in the garden area.
- <2> - Observed without flowers or fruit, so species determination not possible or not certain.
- <3> - Observed near but outside of Project footprint, including landscaping along Meheula Parkway.

A total of 45 plant taxa were recorded during the survey. Among them, four (9% of the total) are Early Polynesian introductions and twelve (27% of the total) are ornamental plants that are not naturalized or well-established outside of cultivation. The remaining 29 taxa (64% of the total) are naturalized plants (i.e., grow naturally in the wild) that were introduced to the Hawaiian Islands after 1778. No indigenous or endemic native plant species were recorded.

Avian Fauna

A total of 8 bird species, representing 8 separate families, were recorded during the survey as incidental observations. One indigenous migratory species was

recorded, while the remaining species observed were non-native introductions that have become naturalized in Hawai'i. The avian fauna detected in the vicinity of the Project area are presented in Table 2.

Table 2. Avian species detected in the survey area.

Common Name	ORDER FAMILY *Species*	Status
	COLUMBIFORMES COLUMBIDAE - Pigeons & Doves	
Zebra Dove	*Geopelia striata*	NN
	PELECANIFORMES ARDEIDAE - Herons, Bitterns & Allies	
Western Cattle-Egret	*Ardea ibis*	NN
	PSITTACIFORMES PSITTACULIDAE - Lories, Lovebirds, and Indomalayan and Papua-Australasian Parrots	
Rose-ringed Parakeet	*Psittacula krameri*	NN
	PASSERIFORMES PYCNONOTIDAE - Bulbuls	
Red-vented Bulbul	*Pycnonotus cafer*	NN
	ZOSTEROPIDAE - White-eyes	
Warbling White-eye	*Zosterops japonicus*	NN
	STURNIDAE - Starlings	
Common Myna	*Acridotheres tristis*	NN
	ESTRILDIDAE - Estrildid Finches	
Java Sparrow	*Padda oryzivora*	NN
	CHARADRIIFORMES	
Pacific Golden-Plover, *Kōlea*	*Pluvialis fulva*	**IM**

Legend to Table 2.

Status:

IM = Indigenous migratory species
NN = Naturalized, non-native species (introduced)

Terrestrial Mammals

No terrestrial mammals were observed during our survey. However, trees of suitable height for Hawaiian hoary bat roosting are scattered about the Project area.

Discussion and Recommendations

Recommendations are partly based on U.S. Fish and Wildlife Service Animal Avoidance and Minimization Measures (USFWS-PIFWO, 2023). Implementation of the recommendations (provided below as bulleted items) by the project contractor will minimize impacts to the environment and to protected species to the maximum extent practicable.

Floral Resources

Occurrences of four Early Polynesian-introduced flora (*kalo, kī, maiʻa* or banana, and *kukui*) are present in the cultivated garden within the Project area. While culturally significant, "canoe plants" brought by early Polynesian settlers are common and their respective populations are abundant outside of the Project area. No plants proposed or listed as threatened or endangered species as set forth in the Endangered Species Act of 1973 as amended (16 U.S.C. 1531-1543; USFWS, n.d.-a; HDLNR, 1998) were seen in the survey area. For plants, state listing follows the federal listing.

Avian Resources

No avian species currently listed or proposed for listing under either the federal or State of Hawaiʻi endangered species statutes (HDLNR, 2015; USFWS, n.d.-a) were detected during this survey. However, one indigenous migratory species, the Pacific Golden-Plover (*Kōlea*) was observed. *Kōlea* spend winters in Hawaiʻi, usually between August and April, before migrating to Alaska to breed and nest.

It is possible that Hawaiian seabirds may overfly the Project area in small numbers between April and the middle of December each year. Protected seabirds in Hawaiʻi include Wedge-tailed Shearwater (*Ardenna pacifica*), Hawaiian Petrel (*Pterodroma sandwichensis*), Newell's Shearwater (*Puffinus newelli*), and Band-rumped Storm-Petrel (*Hydrobates castro*). Nocturnally flying seabirds, especially fledglings on their way to sea in the summer and fall, can become disoriented by exterior lighting. Disoriented seabirds may collide with man-made structures or the ground. If not killed outright, dazed or injured birds

become targets of opportunity for feral mammals (Podolsky et al., 1998; Ainley et al., 2001; Day et al., 2003). The primary cause of mortality in these seabird species is predation by alien mammalian species at the nesting colonies (USFWS, 1983; Ainley et al., 2001). Collision with man-made structures is considered the second most significant cause of mortality for these seabird species in Hawai'i. No suitable nesting habitat exists within or close to the Project area for any of these four seabird species.

- The project can minimize or avoid risks to protected night-flying seabirds by not conducting night-time construction and ensuring that all temporary or installed outdoor lighting is dark sky compliant (see HDLNR-DOFAW, 2016).

Wedge-tailed Shearwater would not nest in the Project area because suitable habitat, littoral vegetation at the coast (USFWS-PIFWO, 2023), is not present. The other night-flying Hawaiian seabird species (Hawaiian Petrel, Newell's Shearwater, and Band-rumped Storm-petrel) nest at high elevations in the mountains, precluding nesting disturbance at the Project site.

Terrestrial Mammalian Resources

Hawaiian Hoary Bat

It is possible that the endangered Hawaiian hoary bat (*Lasiurus semotus*) uses resources in the area. This bat species is solitary and rare but has a widespread distribution in Hawai'i. The removal of trees can temporarily displace individual bats using those trees for roosting. However, the Hawaiian hoary bat uses multiple roosts within a home territory (Bonaccorso, 2015), so the potential disturbance resulting from the removal of vegetation is likely to be minimal. An exception might be during the pupping season, when females carrying their pups may be less able to vacate a roost site if the tree is felled. Further, adult female bats sometimes leave their pups in the roost tree while they forage. Very small pups may be unable to flee a tree that is being felled.

- Potential adverse impacts to Hawaiian hoary bats can be avoided or minimized by not clearing woody vegetation taller than 4.6 m (15 ft) between June 1 and September 15, the bat pupping season, and by avoiding the use of barbed wire for fencing (USFWS-PIFWO, 2023).

Other Resources of Potential Concern

Critical Habitat

Federally delineated Critical Habitat is not present in the Project area (USFWS, n.d.-b). No equivalent designation exists under state law.

References Cited

Ainley, D. G, R. Podolsky, L. Deforest, G. Spencer, and N. Nur. 2001. The Status and Population Trends of the Newell's Shearwater on Kauaʻi: Insights from Modeling, in: Scott, J. M, S. Conant, and C. Van Riper III (editors) *Studies in Avian Biology,* 22: 108-123.

Bonaccorso, F. J., C. M. Todd, A. C. Miles, and P. M. Gorresen. 2015. Foraging range movements of the endangered Hawaiian hoary bat, *Lasiurus cinereus semotus*. *J. of Mammology*, 96: 64-71.

Chesser, R. T., S. M. Billerman, K. J. Burns, C. Cicero, J. L. Dunn, B.E. Hernández-Baños, R. A. Jiménez, O. Johnson, A. W. Kratter, N. A. Mason, P. C. Rassmusen 2024. Check-list of North American Birds. American Ornithological Society. Available online at URL: http://checklist.aou.org/taxa; last accessed August 19, 2025.

Chesser, R. T., S. M. Billerman, K. J. Burns, C. Cicero, J. L. Dunn, B.E. Hernández-Baños, R. A. Jiménez, O. Johnson, N. A. Mason, and P. C. Rassmusen. 2025. Sixty-sixth Supplement to the American Ornithological Society's Check-list of North American Birds. *Ornithology*, 142: 1-18.

Day, R. H., B. Cooper and T. C. Telfer. 2003. Decline of Townsend's (Newell's Shearwaters (*Puffinus auricularis newelli*) on Kauaʻi, Hawaii. *The Auk,* 120: 669-679.

Hawaii Department of Land and Natural Resources (HDLNR). 1998. Indigenous Wildlife, Endangered And Threatened Wildlife And Plants, And Introduced Wild Birds. Department of Land and Natural Resources. State of Hawaiʻi. Administrative Rule §13-134-1 through §13-134-10, dated March 02, 1998.

Hawaii Department of Land and Natural Resources (HDLNR). 2015. Hawaiʻi Administrative Rules, Title 13, Department of Land and Natural

Resources, Subtitle 5 Forestry and Wildlife, Part 2 Wildlife, Chapter 124, Indigenous Wildlife, Endangered and Threatened Wildlife, Injurious Wildlife, Introduced Wild Birds, and Introduced Wildlife. 16 pp.

Hawaii Department of Land and Natural Resources-Division of Forestry and Wildlife (HDLNR-DOFAW). 2016. *Wildlife Lighting*. Available online at URL: https://dlnr.hawaii.gov/wildlife/files/2016/03/DOC439.pdf; last accessed August 19, 2025.

Imada, C. T. 2019. Hawaiian Naturalized Vascular Plants Checklist (February 2019 update). *Bishop Museum Technical Report 69*. 209 pp.

Palmer, D. D. 2003. *Hawai'i's Ferns and Fern Allies*. University of Hawai'i Press, Honolulu. 324 pp.

Pinzari, C. A., L. Kang, P. Michalak, L. S. Jermiin, D. K. Price, and F. J. Bonaccorso. 2020. Analysis of the Genomic Sequence Data Reveals the Origin and Evolution and Separation of Hawaiian Hoary Bat Populations. *Genome Biology and Evolution,* 12(9): 1504-1514.

Podolsky, R., D. G. Ainley, G. Spencer, L. de Forest, and N. Nur. 1998. Mortality of Newell's Shearwaters Caused by Collisions with Urban Structures on Kaua'i. *Colonial Waterbirds*, 21: 20-34.

Ranker, T. A., C. T. Imada, K. Lynch, D. D. Palmer, A. L. Vernon, and M. K. Thomas. 2019. Taxonomic Nomenclature Updates to the Fern and Lycophyte Flora of the Hawaiian Islands. *Am. Fern J.,* 109(1): 54-72.

Staples, G. W. and D. R. Herbst. 2005. *A Tropical Garden Flora. Plants Cultivated in the Hawaiian Islands and other Tropical Places*. Bishop Museum, Honolulu. 908 pp.

U.S. Fish and Wildlife Service (USFWS). No date (n.d.-a). USFWS Environmental Conservation Online System (ECOS) – Hawaii. Available online at URL: https://ecos.fws.gov/ecp/report/species-listings-by-state?stateAbbrev=HI &stateName=Hawaii&statusCategory=Listed; last accessed August 19, 2025.

U.S. Fish and Wildlife Service (USFWS). No date (n.d.-b). Critical Habitat for Threatened & Endangered Species. Available online at URL: https://ecos.fws.gov/ecp/report/critical-habitat; last accessed August 19, 2025.

U.S. Fish and Wildlife Service (USFWS). 1983. Hawaiian Dark-Rumped Petrel & Newell's Manx Shearwater Recovery Plan. USFWS, Portland, Oregon. February 1983. 57 pp.

U.S. Fish and Wildlife Service – Pacific Islands Fish and Wildlife Office (USFWS-PIFWO). 2023. FINAL Avoidance and Minimization Measures (AMMs). Available online at URL: https://www.fws.gov/media/animal-avoidance-and-minimization-measures-may-2023-0; last accessed August 19, 2025.

Wagner, W. L., D. R. Herbst, and S.H. Sohmer. 1990. *Manual of the Flowering Plants of Hawai'i: Volume I and II*. Bishop Museum Special Publication 83. University of Hawai'i Press. 1853 pp.

Wagner, W. L. and D. R. Herbst. 1999. *Supplement to the Manual of the Flowering Plants of Hawai'i*, pp. 1855-1918. *In:* Wagner, W.L., D.R. Herbst, and S.H. Sohmer, *Manual of the Flowering Plants of Hawai'i*. Revised edition. 2 vols. University of Hawaii Press and B.P. Bishop Museum.

Wilson, D. E. and D. M. Reeder (eds.). 2005. Wilson & Reeder's Mammal Species of the World (Third Edition). Available online at URL: https://www.departments.bucknell.edu/biology/resources/msw3/; last accessed August 19, 2025.

(This page intentionally left blank.)

Appendix F

Archaeological Pedestrian Survey

(This page intentionally left blank.)

Pedestrian Survey

A pedestrian survey was conducted on September 8, 2025 by Keala Pono archaeologists Max Pinsonneault, MA, Tiffany Brown, BA, Jacob Flores, BA, and Emily Standfield. The 0.68 ha (1.69 ac) of the project area were visually inspected to determine if any surface cultural resources may be present, and to assess the potential likelihood for subsurface cultural resources to exist.

The project area is primarily composed of two main components: a paved asphalt parking lot, which occupies most of the eastern portion (Figures 1 and 2), and a fenced gardening area located in the western portion (see Figure 1; Figure 3). Along the northern and southern boundaries of the project area are two short, grass-covered hills (Figure 4). In the northeastern corner of the garden stands a metal storage container, fronted on its east side by a concrete patio with discarded concrete blocks placed at its northeast corner (Figure 5). At the rear of the container is a corroded metal crate filled with basalt cobble rocks and a metal and wood garden hoe, surrounded by more concrete blocks (Figure 6).

Adjacent to the south side of the container are two upright wooden posts, most likely the remnants of telephone poles which have been cut in half (Figure 7). The corresponding upper halves of these poles were also observed on-site, discarded in a small scrap wood pile near the northeastern corner of the banana tree section of the garden (Figure 8). In addition to banana trees, the garden also supports the cultivation of other crops, including eggplant, papaya, and squash (Figure 9-Figure 10).

In sum, the project area is primarily composed of a paved asphalt parking lot and a gardening area. The metal storage container with a concrete patio with a metal crate positioned at its rear are present within the garden as well as two cut telephone poles. The garden currently supports the cultivation of bananas, papayas, squash, and eggplant. Two grass-covered hills are located along the northern and southern boundaries of the project area. Additional vegetation present within the project area are several ornamental trees which dot the parking lot. The surrounding parcels are similarly developed, featuring both constructed and landscaped elements.

No evidence was identified during the pedestrian survey to suggest that any of the observed features are over 50 years old. Consequently, no traditional or historic resources were documented. Given the extent of modern development within the project area, the likelihood of encountering traditional or historic surface features is low. Nonetheless, the potential remains for subsurface features to have survived despite recent disturbances.

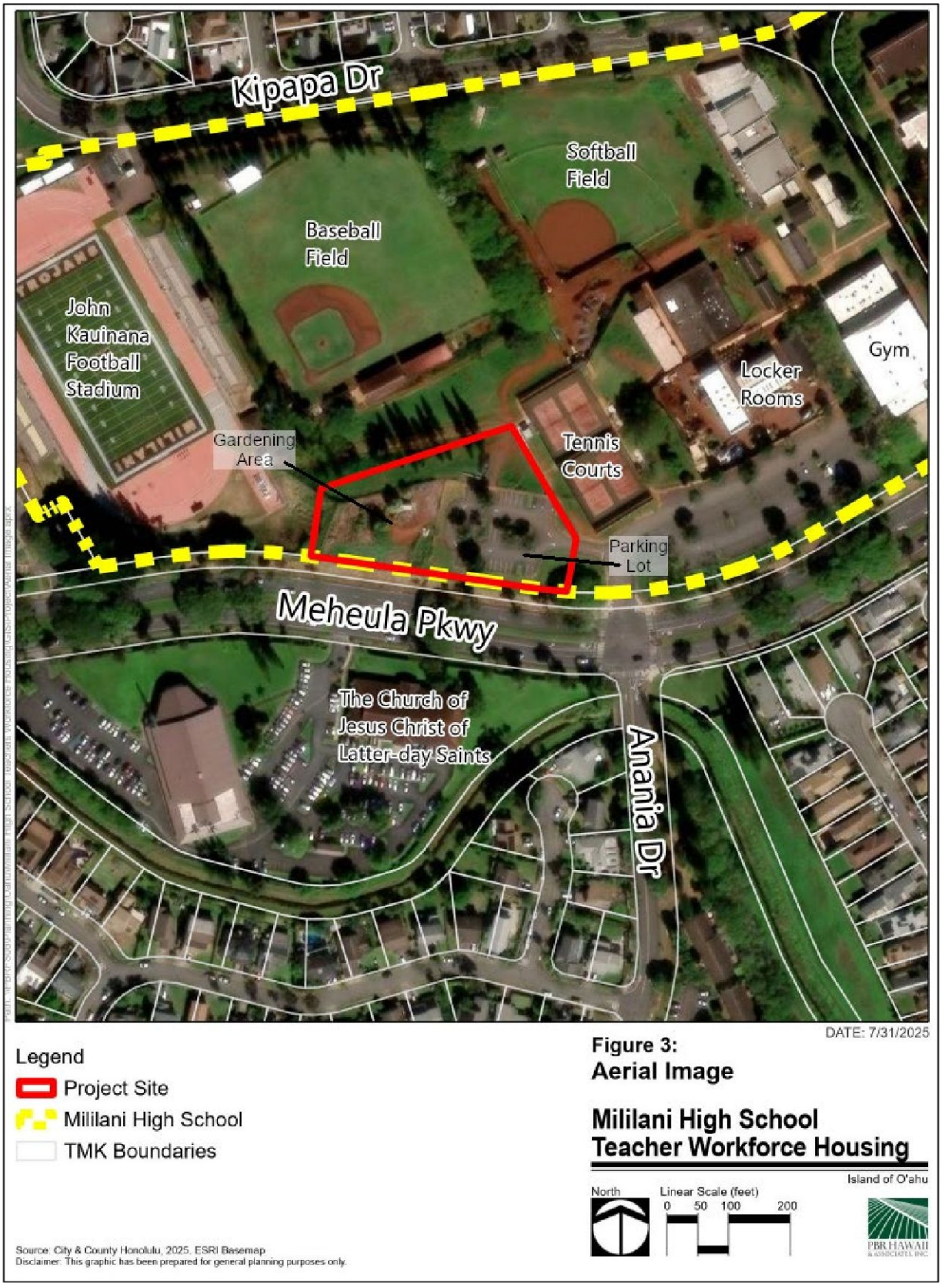

Figure 1. Project site showing gardening area and parking lot.

Figure 2. Parking lot, facing southeast.

Figure 3. Gardening area, facing east-southeast.

Figure 4. Grassy hill along the northern boundary, facing west-southwest.

Figure 5. Metal storage container with a concrete patio and scattered concrete blocks, facing southwest.

Figure 6. Corroded metal crate surrounded by concrete blocks, facing south-southwest.

Figure 7. Cut telephone poles, facing northwest.

Figure 8. Cut halves of the telephone poles in a small wood pile, facing west-northwest.

Figure 9. Garden overview, facing northeast.

Figure 10. Garden overview, facing north.

(This page intentionally left blank.)

Appendix F-1

SHPD Review Letter

(This page intentionally left blank.)

JOSH GREEN, M.D.
GOVERNOR | KE KIA'ĀINA

SYLVIA LUKE
LIEUTENANT GOVERNOR | KA HOPE KIA'ĀINA

DAWN N.S. CHANG
CHAIRPERSON
BOARD OF LAND AND NATURAL RESOURCES
COMMISSION ON WATER RESOURCE MANAGEMENT

RYAN K.P. KANAKA'OLE
FIRST DEPUTY

CIARA W.K. KAHAHANE
DEPUTY DIRECTOR - WATER

AQUATIC RESOURCES
BOATING AND OCEAN RECREATION
BUREAU OF CONVEYANCES
COMMISSION ON WATER RESOURCE MANAGEMENT
CONSERVATION AND COASTAL LANDS
CONSERVATION AND RESOURCES ENFORCEMENT
ENGINEERING
FORESTRY AND WILDLIFE
HISTORIC PRESERVATION
KAHOOLAWE ISLAND RESERVE COMMISSION
LAND
STATE PARKS

STATE OF HAWAI'I | KA MOKU'ĀINA 'O HAWAI'I
DEPARTMENT OF LAND AND NATURAL RESOURCES
KA 'OIHANA KUMUWAIWAI 'ĀINA

STATE HISTORIC PRESERVATION DIVISION
KAKUHIHEWA BUILDING
601 KAMOKILA BLVD, STE 555
KAPOLEI, HI 96707

May 12, 2026

IN REPLY REFER TO:
Project No. 2025PR01031
Doc. No. 2605JG07
Archaeology
Architecture

Riki Fujitani, Executive Director
Hawai'i School Facilities Authority (SFA)
2759 S. King Street, Room H201
Honolulu, HI 96826
Email: riki.fujitani@hisfa.org

Jadine Urasaki, Public Works Administrator
Facilities Development Branch
Office of Facilities and Operations
Hawaii State Department of Education (DOE)
3633 Waialae Avenue, Administration Building, Room 201
Honolulu, HI 96816
Email: jadine.urasaki@k12.hi.us

Dear Riki Fujitani and Jadine Urasaki:

SUBJECT: **Hawaii Revised Statutes (HRS) §6E-8 Historic Preservation Review**
Request for Concurrence with a Project Effect Determination
Mililani High School Teacher Workforce Housing Project
95-475 and 95-1200 Meheula Parkway, Mililani, HI 96789
SFA Job No. ST0001-26
Waipi'o Ahupua'a, 'Ewa District, Island of O'ahu
TMK: (1) 9-5-001:017 and 054

This letter provides the State Historic Preservation Division's (SHPD's) review of Hawaii School Facilities Authority's (SFA's) and the Pacific Housing Assistance Corporation's (PHAC's) Mililani High School Teacher Workforce Housing Project in collaboration with the Hawaii State Department of Education (DOE), and the Hawaii Housing Finance Development Corporation (HHFDC), received on September 12, 2025 (Submission No. 2025PR01031.001). The initial submittal included a HRS 6E Submittal Form, construction plans, a list of associated permit types, USGS and TMK maps and photos of the project area. Subsequently, the SHPD received the following:

- A SFA agency cover letter requesting concurrence with a project effect determination on January 26, 2026 (Submission No. 2025PR01031.002);
- A Hawai'i Housing Finance and Development Corporation (HHFDC) agency cover letter on February 24, 2026 (Submission No. 2025PR01031.003) indicating that the project will receive HHFDC funds and requesting concurrence with a project effect determination; and
- Summary of a Pedestrian Survey (Pinsonneault et al. 2025; Submission No. 2025PR01031.004)

The proposed project area comprises a 1.9427-acre portion of the subject parcels TMK: (1) 9-5-001:017 (owned by the Mililani Town Association) and 054 (owned by the State of Hawaii). The proposed project scope of work involves constructing 95 multi-family rental housing units (one-and two-bedroom units) for teachers and education personnel, resource and social amenities (e.g., fitness center, spaces for social gatherings and educational workshops, a teacher resource room, on-site laundry facilities), as well as a dog park.

A review of SHPD records indicates that the proposed project area was not included as part of any previous archaeological studies and that no historic properties have been previously identified. Additionally, contemporary aerial imagery indicates that the proposed project area was impacted by ground-disturbing activities associated with the development of the school property and infrastructure.

A pedestrian survey of the project area was conducted on September 8, 2025 (Pinsonneault et al. 2025). The pedestrian survey resulted in negative findings.

Although the pedestrian survey document report does not fulfill the requirements of an archaeological inventory survey report as specified in HAR § 13-276-5, it serves to facilitate project planning and supports the historic preservation review process. Please submit 2 hard copies of the report, clearly labeled LIBRARY COPY, along with a text-searchable PDF copy of the report and a copy of this letter to the SHPD Kapolei office, Attn. Library. Also submit a text-searchable PDF copy of the report to HICRIS Project 2025PR01031 in response to our request, and a PDF copy of the report SHPD.archaeology.library@hawaii.gov.

Located on the immediate project site is a metal crate storage which does not appear to be over 50 years old. The Mililani High School campus was built in phases from the 1970s through the 1990s, with 1960 portable classrooms added to the school campus and is likely eligible for listing in the Hawaii Register of Historic Places and is over 50 years old. The proposed project is located away from majority of the Mililani High School campus buildings. The proposed project does not remove any historic materials or alter features and spaces that characterize the school campus and surrounding area. Therefore, the proposed project will not affect the design, workmanship, materials, location, setting, association and feeling of the Mililani High School campus.

Based on the information provided above, **the SHPD concurs** with a project determination of "No historic properties affected" for the project pursuant to HAR §13-275-7(a)(1). Pursuant to HAR §13-275-7(e), when the SHPD agrees that the action will not affect any significant historic properties, this is the SHPD's written concurrence and HRS 6E-8 historic preservation review ends.

The SHPD hereby notifies the SFA, PHAC, DOE, and HHFDC that the HRS Chapter 6E historic preservation review process is concluded for the subject project. The project initiation process may continue.

Please contact Tanya Hemmings, Architectural Historian, at tanya.hemmings@hawaii.gov, for any concerns regarding architectural resources or this letter, or Joshua Gastilo, Inter-Agency Archaeologist IV, at joshua.gastilo@hawaii.gov, for any questions or concerns regarding archaeological resources or this letter.

Aloha, Susan A. Lebo

Susan A. Lebo, PhD
Archaeology Branch Chief

Signed For

Jessica L. Puff, PhD.
Administrator, State Historic Preservation Division
Deputy State Historic Preservation Officer

cc:

Dean Watase, dean.k.watase@hawaii.gov
Audrey Awaya, aawaya@pacific-housing.org
Karen Arakawa, karakawa@pacific-housing.org
Lacey Shimabukuro, lshimabukuro@pacific-housing.org
Windy McElroy, wkm@keala-pono.com
Brian Canevari, brian.canevari@hisfa.org

Appendix G

Cultural Impact Assessment

(This page intentionally left blank.)

DRAFT— Cultural Impact Assessment for Mililani High School Teacher Workforce Housing Project, Waipi‘o Ahupua‘a, ‘Ewa District, Island of O‘ahu, Hawai‘i

TMK: (1) 9-5-001:054 (por.) and 017 (por.)

Prepared For:
Pacific Housing Assistance Corporation
888 Iwilei Road, Suite 200
Honolulu, HI 96817

May 2026

Keala Pono Archaeological Consulting, LLC ● 98-030 Hekaha St. Suite 31, Aiea, HI 96701 ● Phone 808.381.2361

DRAFT— Cultural Impact Assessment for Mililani High School Teacher Workforce Housing Project, Waipi‘o Ahupua‘a, ‘Ewa District, Island of O‘ahu, Hawai‘i

TMK: (1) 9-5-001:054 (por.) and 017 (por.)

Prepared For:
Pacific Housing Assistance Corporation
888 Iwilei Road, Suite 200
Honolulu, HI 96817

Prepared By:

Gina Pualani McGuire, PhD
Tiffany Brown, BA
and
Windy Keala McElroy, PhD

May 2026

Keala Pono Archaeological Consulting, LLC ● 98-030 Hekaha St. Suite 31, Aiea, HI 96701 ● Phone 808.381.2361

MANAGEMENT SUMMARY

Keala Pono Archaeological Consulting conducted a Cultural Impact Assessment (CIA) for improvements to the Mililani High School Teacher Workforce Housing Project at 95-1200 Meheula Parkway. This is located on TMK: (1) 9-5-001:054 (por.) and 017 (por.) in Waipiʻo Ahupuaʻa, ʻEwa District, on the island of Oʻahu, Hawaiʻi. The purpose of this study is to identify any traditional cultural resources or practices in the area, determine if the proposed project will impact any cultural resources or practices, and offer mitigation recommendations.

The current study took the form of background research and an ethnographic survey consisting of three interviews and a written statement. The background research synthesizes traditional and historic accounts and land use history for Waipiʻo Ahupuaʻa and the wider district of ʻEwa. This region is remembered in ʻōlelo noʻeau, moʻolelo, and a multitude of place names. It is an area that was important for its numerous streams and natural resources. Previous archaeological investigations documented remnants of the plantation-era Waiāhole Ditch System, constructed by the Oahu Sugar Company in the early 1900s, located just south of the project area. Another historic property in the project vicinity is Mililani Waena Elementary School, located to the north of the current project area.

Consultations with individuals knowledgeable about Waipiʻo Ahupuaʻa produced information on a number of cultural practices, archaeological sites, and moʻolelo in the Waipiʻo regions. Current cultural practices within the area surrounding the project are limited due to the large scale land use changes (including the sandalwood trade, pineapple and sugar plantation use, and modern development) and reduced numbers of native plants. Active cultural practices occurring at Mililani High School include cultivation of kalo, ʻulu, coconuts, kō, kukui, squash, and other food crops, gathering of ti, cultural stewardship, native plant propagation, and preparing imu. Interviewees shared that the ahupuaʻa name, Waipiʻo, refers to curved water and rainbows as physical manifestations of akua and ancestors. Mele Waipiʻo was shared, of importance to the ʻĪʻī family descendants and discussing the Laulani wind.

Interviewees shared that the impacts of the proposed improvements will depend on the extent that it displaces pre-existing student programs. The project proponent confirmed that the project will not displace any student programs, including the agricultural program, as the plants near the parking lot are used by maintenance staff only. The project has the potential to have a positive effect on cultural practices if it can incorporate native plants into landscape design and incorporate Hawaiian cultural knowledge into the design of the housing. There is the potential to encounter iwi kūpuna or cultural artifacts during ground disturbance.

There was general support from the interviewees for the proposed project with an understanding for the need for teacher housing. Key concerns include the declining connections between students and the cultural history and landscape of Mililani; ground disturbance may encounter iwi kūpuna and artifacts; potential impact on gathering activities of students and community members; and that there may be a compromise of student programs for the teacher housing. The interviewees recommended the following: 1) follow cultural protocols and repatriation if any iwi kūpuna or artifacts are encountered; 2) have cultural monitors present during ground disturbing activities; 3) incorporate the cultural identity and rich history of Mililani into the building designs; 4) include native plants into landscaping and project design; 5) expand agricultural spaces and programs; 6) research and utilize navigational and star names within the project that have ties to Mililani and 7) continue to have open conversations with community members and follow recommendations that are shared.

CONTENTS

MANAGEMENT SUMMARY i

FIGURES v

TABLES v

INTRODUCTION 1
Project Location and Project Description 1
Natural Environment 1
Project Area Soils 5

TRADITIONAL CULTURAL AND HISTORICAL BACKGROUND 7
‘Ewa and Waipi‘o in the Pre-Contact Era 7
Place Names 8
Subsistence and Traditional Land Use 9
Power and Warfare 10
Mo‘olelo 13
‘Ewa Moku 13
Waipi‘o Ahupua‘a 14
‘Ōlelo No‘eau 15
Oli and Mele 16
‘Ewa and Waipi‘o in the Historic Era 18
Early Historical Accounts of the ‘Ewa Region 19
Waipi‘o and the Changes in Land Tenure 20
The Late Historic Era in ‘Ewa 21
Ranching 22
The Oahu Railway and Land Company (OR&L) 22
Sugarcane, Rice, and Pineapple Cultivation 22
Historic Maps 23
Previous Archaeological and Cultural Studies 28
Summary of Background Research 35

ETHNOGRAPHIC SURVEY 36
Methods 36
Consultant Background 38
Olan Leimomi Fisher 38
Jo-Lin Lenchanko Kalimapau 38
Kelsie Kuniyoshi 38
Giovanni Kaanehe 39
Topical Breakouts 39
Connections to the Project Lands 39
Land Use and Archaeological Sites 40
The Natural Environment and Traditional Cultural Practices 41
Mo‘olelo, Mele, Place Names 43
Change Through Time 45

Contents

Concerns and Recommendations 47
Summary of Ethnographic Survey 49
CULTURAL IMPACT ASSESSMENT 51
Cultural Resources, Practices, and Beliefs Identified 51
Potential Effects of the Proposed Project on Cultural Resources, Practices, and Beliefs 53
Recommendations and Mitigations 53
Confidential Information Withheld 53
Conflicting Information 53
GLOSSARY 54
REFERENCES 59
APPENDIX A: AGREEMENT TO PARTICIPATE 63
APPENDIX B: CONSENT FORM 67
APPENDIX C: TRANSCRIPT RELEASE FORM 71
APPENDIX D: INTERVIEW WITH OLAN LEIMOMI FISHER 75
APPENDIX E: INTERVIEW WITH JO-LIN LENCHANKO KALIMAPAU 85
APPENDIX F: INTERVIEW WITH KELSIE KUNIYOSHI 89
APPENDIX G: WRITTEN STATEMENT FROM GIOVANNI KAANEHE 103

FIGURES

Figure 1. USGS Schofield Barracks quadrangle map showing the project area (USGS 2025). 2
Figure 2. TMK Plat (1) 9-5-01 showing the project area (State of Hawai‘i 1985). 3
Figure 3. The proposed Mililani High School teacher housing site plan. 4
Figure 4. Soils in the project area and vicinity (data from Foote et al. 1972). 6
Figure 5. Trails in proximity to the project area (Rockwood n.d. in ‘Ī‘ī 1959:96)..... 11
Figure 6. Mele that mentions places in ‘Ewa (Hawaiian Historical Society 2003:98–99)..... 17
Figure 7. Portion of an early map of Honouliuli (Alexander 1873). 24
Figure 8. Portion of an Oahu Government Survey map showing the study region (Lyons 1876). . 25
Figure 9. Portion of an early map of Waipi‘o showing the project area (Brown 1877). 26
Figure 10. Portion of a government survey map of Pearl Harbor and ‘Ewa (Kanakanui 1894). ... 27
Figure 11. Waipi‘o section of a Hawaii Territory Survey map (Wall 1902)..... 29
Figure 12. Map of Schofield Barracks and the surrounding area (Mahinske 1935)..... 30
Figure 13. Previous archaeological and cultural studies within 0.5 km of the project area. 31
Figure 14. Known archaeological sites located within 0.5 km of the project area. 32

TABLES

Table 1. Previous Archaeological Studies Near the Project Area 33
Table 2. Archaeological Sites With Known Locations Within 0.5 km of the Project Area 33
Table 3. List of Individuals/Organizations Contacted..... 37
Table 4 Cultural Resources, Practices, and Beliefs Identified, Effects of the Proposed Project, and Proposed Mitigation Actions..... 52

INTRODUCTION

At the request of the Pacific Housing Assistance Corporation (PHAC), Keala Pono Archaeological Consulting conducted a cultural impact assessment (CIA) for the proposed construction of affordable teacher housing at 95-1200 Meheula Parkway. This is located on TMK: (1) 9-5-001:054 (por.) and 017 (por.) in Waipiʻo Ahupuaʻa, ʻEwa District, on the island of Oʻahu, Hawaiʻi. This work was designed to identify, document, assess significance, and provide mitigation recommendations for any historic properties that may be located in the project area in anticipation of the proposed project. The purpose of this study is to identify any traditional cultural resources or practices in the area, determine if the proposed project will impact any cultural resources or practices, and offer mitigation recommendations.

The report begins with a description of the study area and a historical overview of land use and archaeology in the area. The next section presents methods and results of the ethnographic survey. Results are summarized and recommendations are made in the final section. Hawaiian words, flora and fauna, and technical terms are defined in a glossary. Also included are appendices with documents relevant to the ethnographic survey, including full transcripts of the interviews.

Project Location and Project Description

The 1.94-acre (ac.) [0.79 hectare (ha)] project area is situated in the interior of the island of Oʻahu (Figure 1). TMK: (1) 9-5-001:054 is owned by the Department of Land and Natural Resources (DLNR), and TMK: (1) 9-5-001:017 is owned by the Department of Education (DOE). The project area is a built environment consisting of approximately equal portions of a paved asphalt parking lot and a garden used by maintenance staff (Figure 2). These two sections are flanked by grass hills to the north and south. The project area lies at 215–223 meters (m) [705–731 feet (ft.)] above mean sea level (amsl). The Mililani High School athletic complex forms the northern and western project area boundaries, Mililani High School bounds the project area to the east, and Meheula Parkway forms the southern boundary.

The project proposes the development of a new five-story multifamily rental complex designed to support Hawaiʻi's teachers and educational staff by providing affordable living options. Preliminary plans include a total of 94 units (55 one-bedroom and 39 two-bedroom), along with secured parking for residents, which includes 156 parking stalls (Figure 3). Beyond housing, the project also incorporates the construction of a range of amenities, including a fitness center, collaboration spaces for social gatherings and educational workshops, a teacher resource room, on-site laundry facilities, outdoor recreation areas, storage lockers, bicycle and surfboard racks, and a dog park.

Natural Environment

Waipiʻo Ahupuaʻa lies within the ʻEwa District on the island of Oʻahu. It is bordered by Waikele Ahupuaʻa to the west and Waiawa Ahupuaʻa to the east. Its southern edge is at Pearl Harbor, a broad inland embayment formed when ancient river valleys, cut during lower sea levels, were filled by post-glacial sea level rise. Extending northward, Waipiʻo stretches inland and upslope across the Schofield Plateau before reaching into the Koʻolau Mountains.

The project area is situated within the Schofield Plateau between the Koʻolau and Waiʻanae Mountain Ranges. The Waiʻanae volcano last erupted two and a half million years ago while the Koʻolau volcano ceased activity approximately one million years ago (Macdonald et al. 1983:298).

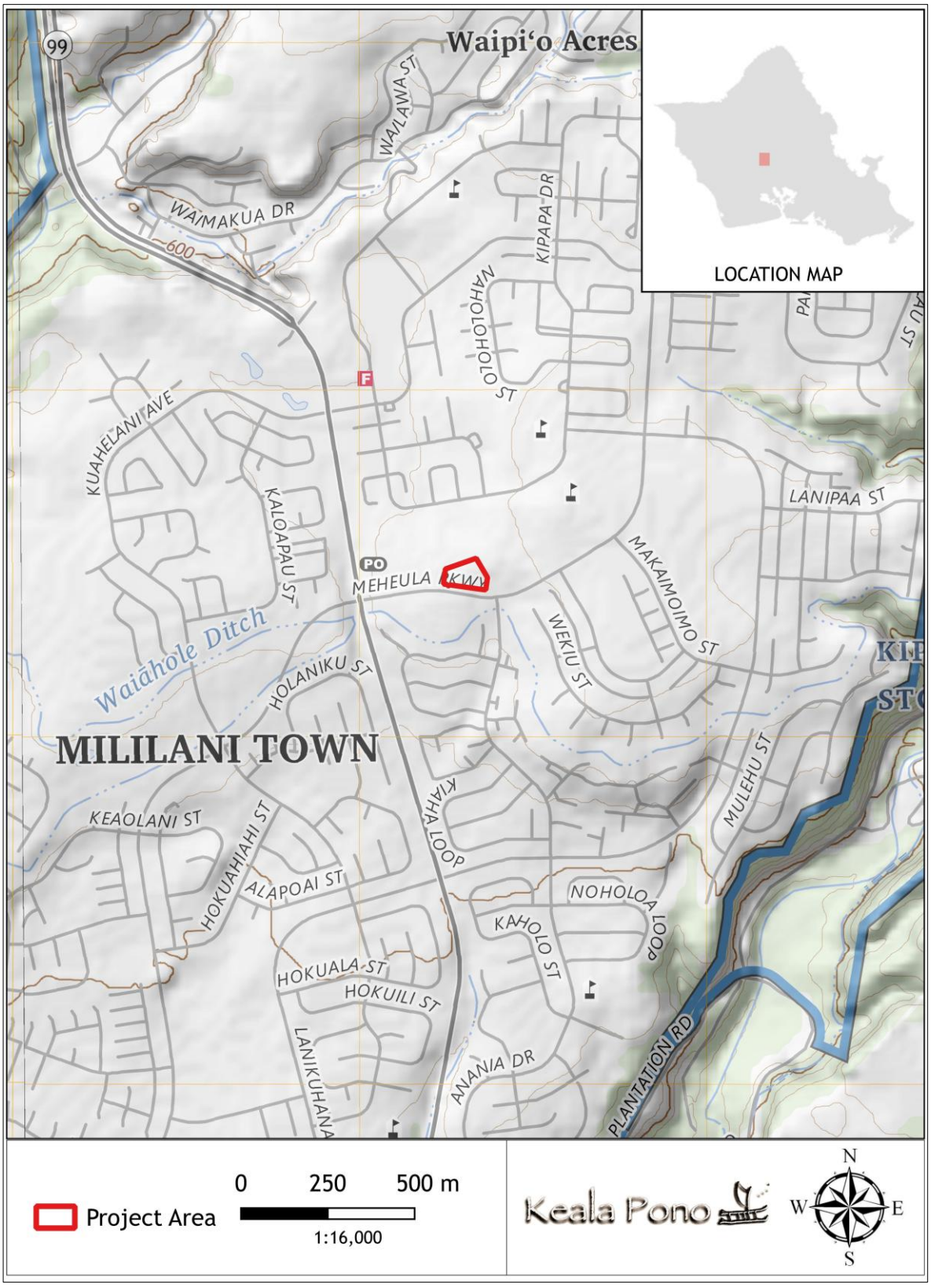

Figure 1. USGS Schofield Barracks quadrangle map showing the project area (USGS 2025).

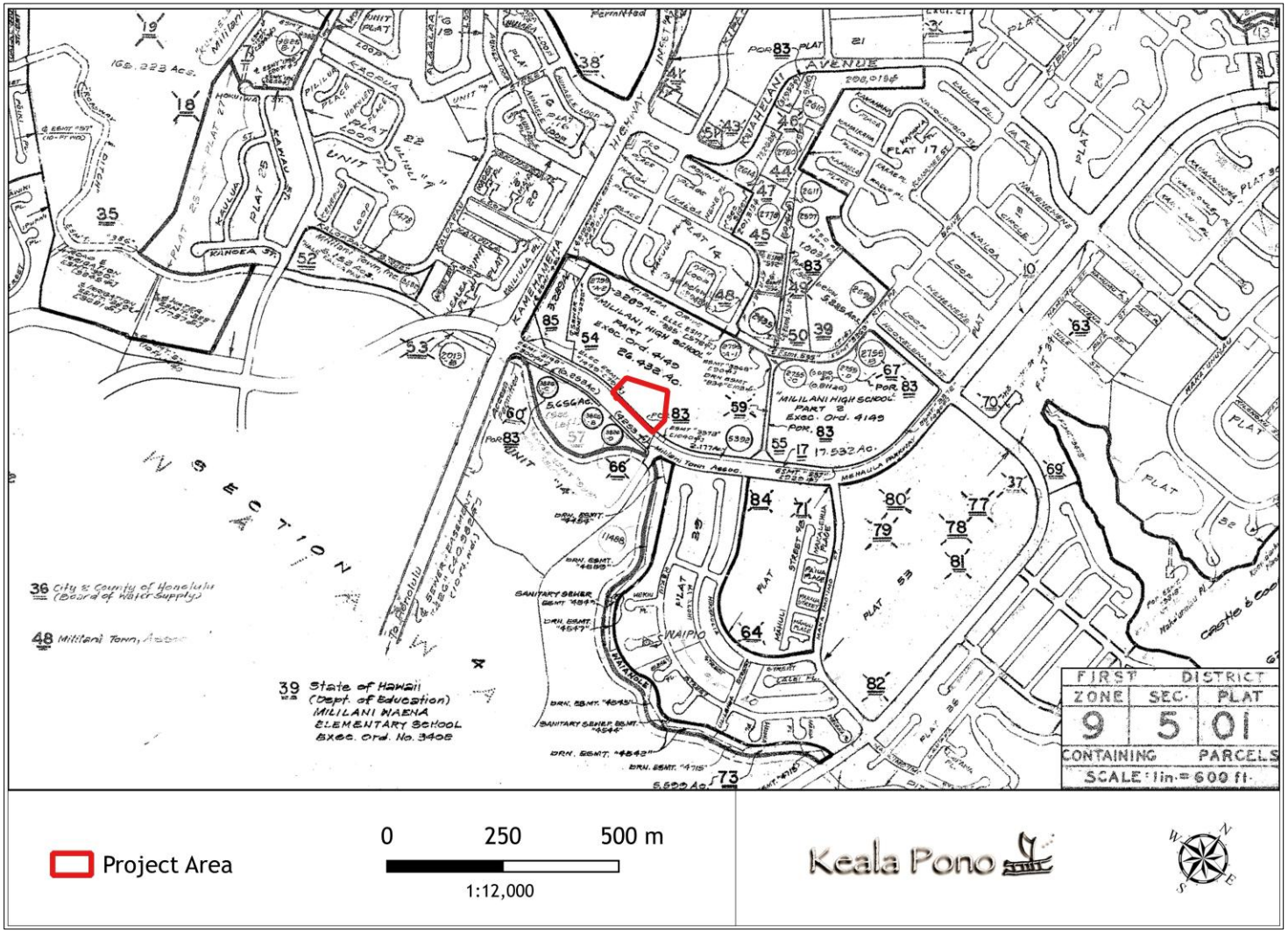

Figure 2. TMK Plat (1) 9-5-01 showing the project area (State of Hawai‘i 1985).

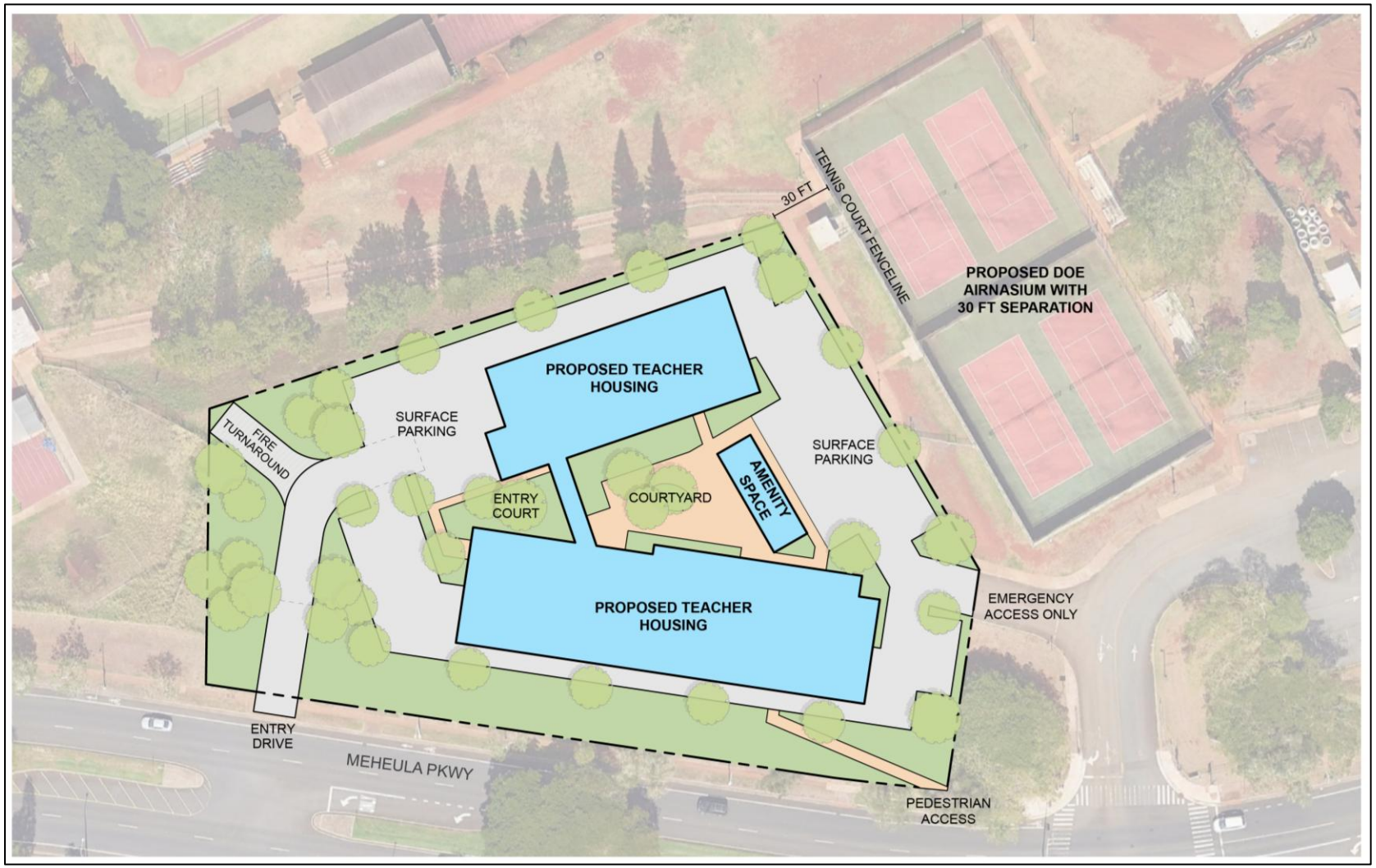

Figure 3. The proposed Mililani High School teacher housing site plan (Pacific Housing Assistance Corporation 2025).

After the Waiʻanae volcano became inactive, the sea eroded the shoreline into steep cliffs, and heavy streams cut deep valleys. At the same time, lava flows from Koʻolau spread into the ocean between the Koʻolau and Waiʻanae volcanoes, eventually joining the two into a single island. The Schofield Plateau formed where the Koʻolau flows built up against the base of the Waiʻanae Mountains (Stearns 1939:8-9).

The Central Oʻahu ground-water system, above which Waipiʻo sits, is the "largest and most productive flow system on Oahu… The Schofield ground-water area separates the northern and southern parts of [this] central Oahu flow system" (USGS 1998:115). Kīpapa Gulch runs adjacent to the project area to its southeast with Waikakalaua Gulch runs adjacent to its northwest. The two gulch streams converge to form Waikele Stream, which flows into the West Loch of Pearl Harbor.

The project area is situated on a low, artificially leveled landmass resembling a plateau, bordered to the north and south by grassy hills. Most of the land has been developed and landscaped, with the addition of a garden where banana, eggplant, papaya, and squash are cultivated. The parking lot is largely paved, though several ornamental trees provide scattered vegetation throughout the area. The project is approximately 7.8 kilometers (km) [4.8 miles (mi.)] from the nearest coastline at Pearl Harbor's Middle Loch.

Rainfall at the project area averages 99 centimeters (cm) [39 inches (in.)] per year (Giambelluca et al. 2013). The closest waterways to the project area are the Kīpapa and Waikakalaua Streams, both perennial tributaries of Waikele Stream. Kīpapa Stream is located approximately 1.2 km (0.7 mi.) southeast of the project area, and Waikakalaua Stream is roughly 1.5 km (0.9 mi.) northwest. As previously mentioned, the two streams join to form Waikele Stream, which continues its course southward and empties into the West Loch of Pearl Harbor.

Project Area Soils

The project area is underlain entirely by soils of the Wahiawa series, specifically Wahiawa silty clay with 3–8% slopes (WaB). To the northwest, another Wahiawa soil type occurs, Wahiawa silty clay with 0–3% slopes (WaA), while to the southeast the soils transition to Manana silty clay with 8–15% slopes (MpC) (Foote et al. 1972; Figure 4). The soil series within and around the project area are defined as follows:

Wahiawa Series

> This series consists of well-drained soils on uplands on the island of Oahu. These soils developed in residuum and old alluvium derived from basic igneous rock. They are nearly level to moderately steep. Elevations range from 500 to 1,200 feet. Rainfall amounts to 40 to 60 inches annually… Wahiawa soils are geographically associated with Kunia, Lahaina, Leilehua, and Manana soils. These soils are used for sugarcane, pineapple, pasture, and homesites. (Foote et al. 1972:124)

Manana Series

> This series consists of well-drained soils on uplands on the island Oahu. These soils developed in material weathered from basic igneous rock. They are gently sloping to steep. Elevations range from 500 to 1,200 feet. The annual rainfall amounts to 40 to 60 inches... Manana soils are geographically associated with Leilehua, Paaloa, and Wahiawa soils. These soils are used for sugarcane, pineapple, and pasture. (Foote et al. 1972:94)

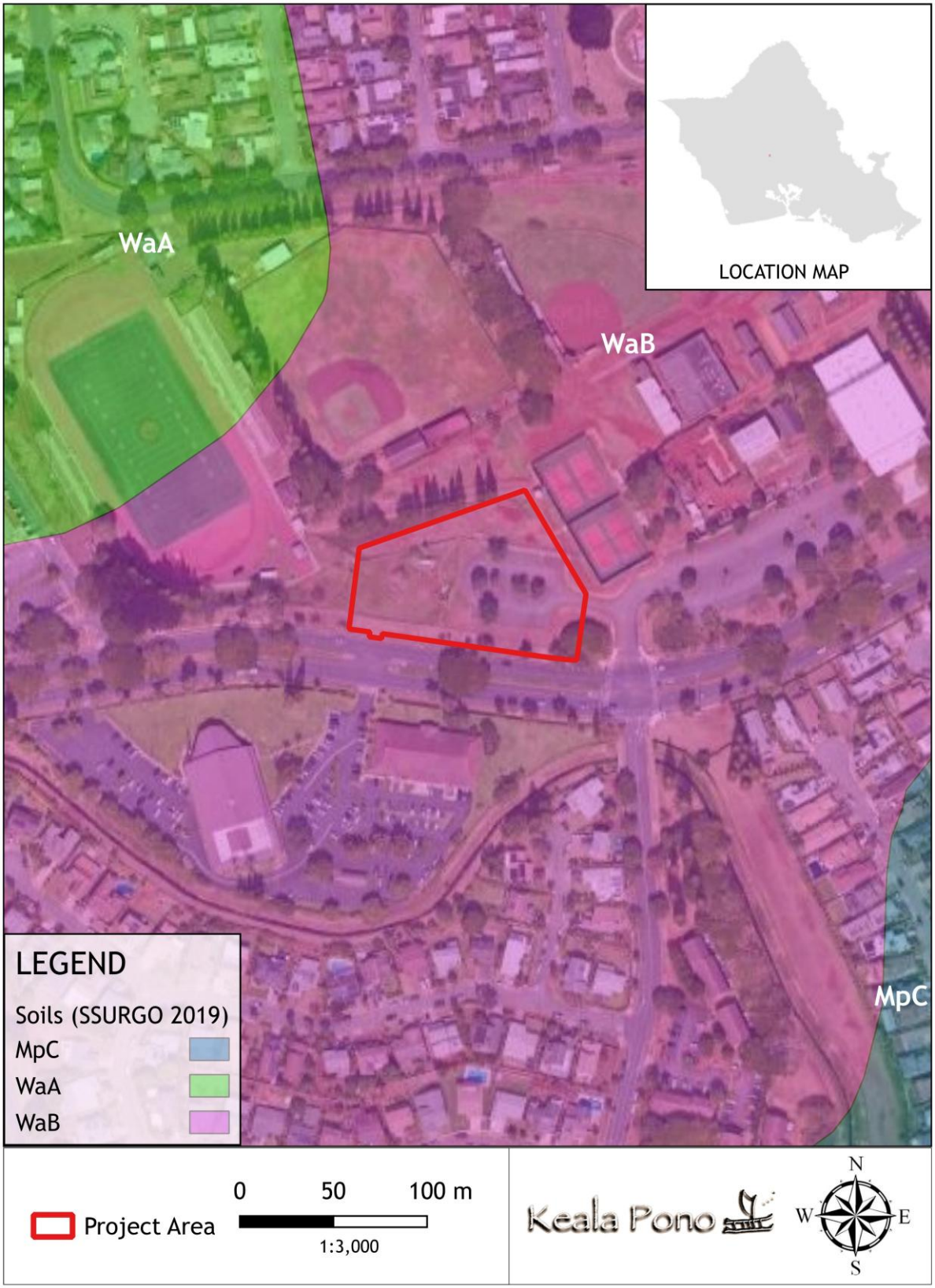

Figure 4. Soils in the project area and vicinity (data from Foote et al. 1972).

TRADITIONAL CULTURAL AND HISTORICAL BACKGROUND

This section of the report presents background information that provides context through which one can examine the cultural and historical significance of the project area and the surrounding lands. In an effort to record and preserve both the tangible (e.g., traditional and historic archaeological sites) and intangible (e.g., moʻolelo, ʻōlelo noʻeau) culture, this research assists in the discussion of anticipated finds. Research was conducted at the Hawaiʻi State Library, the University of Hawaiʻi at Mānoa libraries, the State Historic Preservation Division (SHPD) library, and online through the Waihona ʻAina database and the State of Hawaiʻi Department of Accounting and General Services (DAGS) and Ulukau websites. Historical maps, archaeological reports, Māhele data, and historical references were among the materials examined.

ʻEwa and Waipiʻo in the Pre-Contact Era

The project area is located in ʻEwa Moku, the largest district on Oʻahu, situated along the island's southern shore. The current study area, more specifically, lies within Waipiʻo Ahupuaʻa. The cultural history of Waipiʻo begins with the formation of Hawaiʻi and the birth of life on the islands.

> Native traditions describe the formation (literally the birth) of the Hawaiian Islands and the presence of life on and around them, in the context of genealogical accounts… As this Hawaiian genealogical account continues, we find that these same god-beings, or creative forces of nature who gave birth to the islands, were also the parents of the first man (Hāloa), and from this ancestor, all Hawaiian people are descended. It was in this context of kinship, that the ancient Hawaiians addressed their environment. (Maly and Maly 2003)

Many of the oral accounts which narrate the events from the first peopling of Hawaiʻi to the recent period of written documentation have been lost in time. However, there are several renowned Hawaiian historians who diligently tried to record as much of Hawaiian prehistory as possible. Among these historians is the scholar Samuel Mānaiakalani Kamakau, who shared the following cosmological story of Oʻahu Island:

> Oʻahu is also a new name, given in memory of an ancestor of the people of Oʻahu. Lolo-imehani, Lalo-waia, and Lalo-oho-aniani were the ancient names of Oʻahu. Oʻahu was the child of Papa and Lua… and because Oʻahu was a good chief and the people lived harmoniously after the time of Wākea *mā*, Oʻahu's descendants gave the name of their good chief to the island --- Oʻahu-a-Lua. (Kamakau 1991:129)

According to Kirch (2010:16–127), the first major migrations by Pacific Islanders to Hawaiʻi probably occurred around AD 800–1000. On Oʻahu, the windward side of Puʻuloa (Pearl Harbor) was likely a place where early settlers engaged in traditional agriculture and aquaculture activities. Handy et al. (1991:469) describe natural features of ʻEwa that were advantageous for these activities:

> The salient feature of ʻEwa, and perhaps its most notable point of difference, is its spacious coastal plain, surrounding the deep bays ("lochs") of Pearl harbor, which are actually the drowned seaward valleys of ʻEwa's main streams, Waikele and Waipiʻo. These bays offered the most favorable locality in all the Hawaiian Islands for the building of fishponds and fish traps into which deep-sea fish came on the inflow of tidal waters.
>
> The lowlands, bisected by ample streams, were ideal terrain for the cultivation of irrigated taro. The hinterland consisted of deep valleys running far back into the Koʻolau range. Between the valleys were ridges, with steep sides, but a very gradual increase of altitude. The lower parts of the valley sides were excellent for the culture of yams and bananas. (Handy et al. 1991:469)

Place Names

There are other means, besides archival documentation, by which Hawai‘i’s history has been preserved. One often-overlooked source of history is the information embedded in the Hawaiian landscape. Hawaiian place names “usually have understandable meanings, and the stories illustrating many of the place names are well known and appreciated... The place names provide a living and largely intelligible history” (Pukui et al. 1974:xii).

The name “‘Ewa,” meaning “to crook, to twist, to bend” (Andrews 1865), is thought to be linked to a mo‘olelo in which Kāne and Kanaloa, two prominent Hawaiian gods, threw stones to establish the district’s boundaries (Sterling and Summers 1978). Waipi‘o, translating to “curved water” (Pukui et al. 1974), likely refers to the overall shape of the ahupua‘a and to the way streams and gulches bend and meander across the plain, particularly Kīpapa and Waikakalaua Gulches, which curve toward Middle Loch and West Loch of Pearl Harbor. In addition to its descriptive place name, Waipi‘o holds historical associations as a setting for several battles amongst ali‘i.

Numerous other place names associated with the region surrounding the project area are listed in *Place Names of Hawaii* (Pukui et al. 1974), along with the meanings of the names and/or comments about the specific locales:

> Ka-‘aumakua. Peak, Honouliuli, O‘ahu. *Lit*., the family god. (Pukui et al. 1974:61)
>
> Kīpapa… Ditch, gulch, junction, stream, elementary school, and park, Wahi-a-wā qd., central O‘ahu. *Lit.,* placed prone (referring to corpses slain in the victory of O‘ahu forces over those of Hawai‘i in the fourteenth century…) (Pukui et al. 1974:112–113)
>
> Kū-kani-loko… named for the stones near Wahi-a-wā, O‘ahu, where royalty gave birth (Fornander believed that these birth stones were established in the twelfth century); also the name of an ancient chief. (Pukui et al. 1974:121)
>
> Lei-lehua. Plains, village, high school, and golf course, Wahi-a-wā, area famous for training in *lua* fighting; site of present Schofield Barracks... *Lit*., *lehua* lei. (Pukui et al. 1974: 131)
>
> Līhu‘e… Former land division near Schofield Barracks… *Lit*., cold chill. (Pukui et al. 1974: 132)
>
> Mili-lani… Newly developed town, golf club, and cemetery near Wahi-a-wā, O‘ahu; streets here are named for stars, days, and nights… *Lit*., beloved place [of] chiefs. (Pukui et al. 1974:151)
>
> Moa-‘ula... Heiau, Wai-pi‘o, Hawai‘i, dedicated by Ka-lani-‘ōpu‘u. (Pukui et al. 1974:153)
>
> Pā-na-ka-uahi. Gulch and stream, Wai-pahu qd., O‘ahu. A talkative local god, Ke-akua-‘ōlelo (the speaking god), lived here. According to some accounts he betrayed secrets. In another story he saw a chiefess hide a lei palaoa (whale-tooth pendant) in a stone called Pōhaku-hūnā-palaoa (stone hiding whale-tooth pendant); he promised to tell only her descendants. *Lit*., touched by the smoke. (Pukui et al. 1974:178)
>
> Pu‘u-ka-mana. Hill, Wahi-a-wā qd., O‘ahu. *Lit*., hill [of] the super-natural power. (Pukui et al. 1974:198)
>
> Pu‘u Pōhaku… Wai-pahu qd., O‘ahu. *Lit*., rock hill. (Pukui et al. 1974:205)

In her master’s thesis *Ka Mo‘olelo o Mililani: The Story Beneath the Development in Waipi‘o, ‘Ewa, O‘ahu*, Olan Leimomi Morgan described additional place names important to Mililani and provided more information for some of the places mentioned by Pukui et al. (1974). Excerpts of these are below (Morgan 2014):

> Kaʻānaniʻau. This area is still marked by rock pilings and geographic features known as the "kaʻānaniʻau," a word associated with Oʻahu, similar to the ahupuaʻa or moku land division boundaries except with religious or ceremonial connotations. The word is described by Lenchanko to mean literally "a beautiful period of time." (Morgan 2014:36)
>
> Kīpapa. The Kīpapa gulch, as it is commonly called, is a prominent feature in Mililani. Although the name "Kīpapa" is mostly attributed to the gulch, Kīpapa was known to cover a much larger section including where Kīpapa Drive and Kīpapa Elementary School sit today... As a place much visited, Kīpapa was accessible from other prominent areas such as Kūkaniloko, Paʻalaʻa, and Kolekole through trails frequented by travelers around Oʻahu. (Morgan 2014:50–51)
>
> Kūkaniloko. Kūkaniloko was created by Nanakāoko and his wife Kahiliokalani as the place for the birthing of their child Kapawa... The name Kūkaniloko means "to anchor the cry from within," in reference to the preparation to ease the pains of labor that women would go through before giving birth... Kūkaniloko was the name of the kuapuʻu or backrest, the rock that Kahiliokalani leaned against while giving birth to Kapawa in the presence of 26 aliʻi. (Morgan 2014:33).
>
> Oʻahunui. Oʻahunui is an area where several kaʻānaniʻau markers exist along the northern border of Waipiʻo in the Waikakalāua stream. (Morgan 2014:55)

Subsistence and Traditional Land Use

The traditional sacred center of Oʻahu was in Līhuʻe, where numerous heiau and the Kūkaniloko birthing stones are located. The Kūkaniloko region extends from the rim of Waiʻanae across the Leilehua Plains to the rim of the Koʻolau Mountain Range (kukaniloko.org n.d.), which is just north of the current project area. Oral traditions and early political histories note that land divisions on Oʻahu shifted over time. By the 1300s, district-sized "countries" had formed, and the "country of ʻEwa" encompassed not only the present ʻEwa District but also Waiʻanae and Waialua (Cordy 2002:22). As Cordy explains, this may account for the placement of Kūkaniloko within Waialua today and Līhuʻe extending into Waiʻanae Uka, with later district borders established after these events (Cordy 2002:22, 24).

> It is vital to realize that… there may have been no Waiʻanae or Waialua districts then. This might account for the fact that Kukaniloko is in Waialua today and that Līhuʻe was mostly in today's Waiʻanae Uka and perhaps once lapped over into parts of Waialua and ʻEwa. The borders may have come after. (Cordy 2002:22, 24)

The ʻEwa moku also supported extensive agriculture, with kalo cultivated in irrigated loʻi and ʻuala grown in kula lands. What truly sets the ʻEwa region apart is its expansive coastal plain which is surrounded by the bays of Pearl Harbor. Offering a favorable environment for the construction of fishponds and fish traps, residents of this area also had the opportunity to catch deep-sea fish such as akule, which entered the bays during the incoming tide. These ponds were the summer home of the ʻamaʻama, or mullet. Another important resource of the coastal area was the diverse variety of shellfish found in the harbor. The Hawaiian pearl oyster, pipi, was eaten raw and was prized for its shell that was used to make fishhooks. Other shellfish of the area included pāpaua, ʻowāʻowaka, nahawele, kupekala, and mahamoe (Lahilahi Webb in Handy et al. 1991:471).

The wide lowlands, bisected by streams, created a land that easily facilitated the cultivation of loʻi kalo, irrigated taro patches. ʻEwa's natural landscape with a sprawling plain and gently sloping valley walls, created environments ideal for crops such as banana and yams. Inland, ʻEwa was noted for the cultivation of ʻawa, as well as its mamaki, wauke, and olonā. This extensive upland area, also known as wao, gave inhabitants an advantage during times of famine as a place where they could forage for food during periods of drought (Handy et al. 1991:469). The upland areas of ʻEwa were

also home to unique birds which were prized for their colorful feathers that were used in helmets, capes, and lei.

Before Western notions of property, commerce, and land tenure arrived in the 19th century, daily life in Waipiʻo was rooted in the natural resources and storied landscapes of Puʻuloa (Pearl Harbor). The harbor's broad shoreline and branching estuaries sustained numerous loko iʻa (fishponds) and loʻi kalo (irrigated taro fields), forming the foundation of a thriving subsistence economy. Māhele records indicate that the level coastal flats along Puʻuloa were favored for both settlement as well as intensive wetland taro cultivation.

Waipiʻo Ahupuaʻa was a prominent center of settlement and activity on Oʻahu in the centuries before Western contact. McAllister (1933:106) noted that, "The populous dwelling place of the aliʻi was formerly located on an east point of Waipiʻo Peninsula known as Lepau." The chiefly class was drawn to Waipiʻo not only for its fertile lands but also for the abundance of resources concentrated around Puʻuloa. Handy et al. (1991:470) made the following observation:

> The primary reason for ʻEwa's prominence in history and as an aliʻi stronghold was undoubtedly the existence of the great number of fishponds at different points around Pearl Harbor, which was ʻEwa territory. Two of the largest were on the peninsula, and another was at its northwest corner. (Handy et al. 1991:470)

The notable historian John Papa ʻĪʻī (1959) reminds us that there was a well-known, well-traveled network of trails that crisscrossed Oʻahu connecting east to west and north to south. These trails provided access to subsistence as well as ceremonial and medicinal resources. They also linked settlements for religious and social purposes. The project area is located just east of a major north-south trail that extended from the Pearl Harbor area to Kawailoa (Figure 5). This trail crossed the region connecting the central plateau to the leeward side of the island, as well as to the north shore and the Pearl Harbor area.

> One rose up from Pearl Harbor from Waipiʻo to the Wahiawa area and crossed the uplands to the central or west central plateau in Waiʻanae uka. Here it joined the trail coming from the Waiʻanae coast through Kolekole Pass. Also, a trail from the West Loch of Pearl Harbor (from the shore of Honouliuli, Hoʻaeʻae and Waikele ahupuaʻa) led up to this area approximating today's Kunia Road, and it joined the Kolekole Pass trail before it met the Waipiʻo trail near Malamanui in Waiʻanae uka (old Līhuʻe?). (Cordy 2002:74)

This trail system represents one way in which those residing in Waipiʻo and the greater ʻEwa region could access various resources and traverse to other areas of the island. Forms of interaction and exchange likely took place through these named trails and other trails in the region.

Power and Warfare

As previously discussed, the ʻEwa moku was renowned for its bountiful resources which included fertile lands and well-stocked fishponds which made the region highly sought-after land for the aliʻi. Numerous battles ensued as a result. The plateau lands of Waipiʻo, particularly around Kīpapa Gulch, were the setting of infamous battles between the warrior-chiefs of Oʻahu and invading forces from Hawaiʻi Island.

The most renowned of these was the battle of Kīpapa, in which the Hawaiʻi Island chief Kahikulani (also known as Kakikulani) faced the Oʻahu chief Halemano. According to Pukui et al. (1974:113),

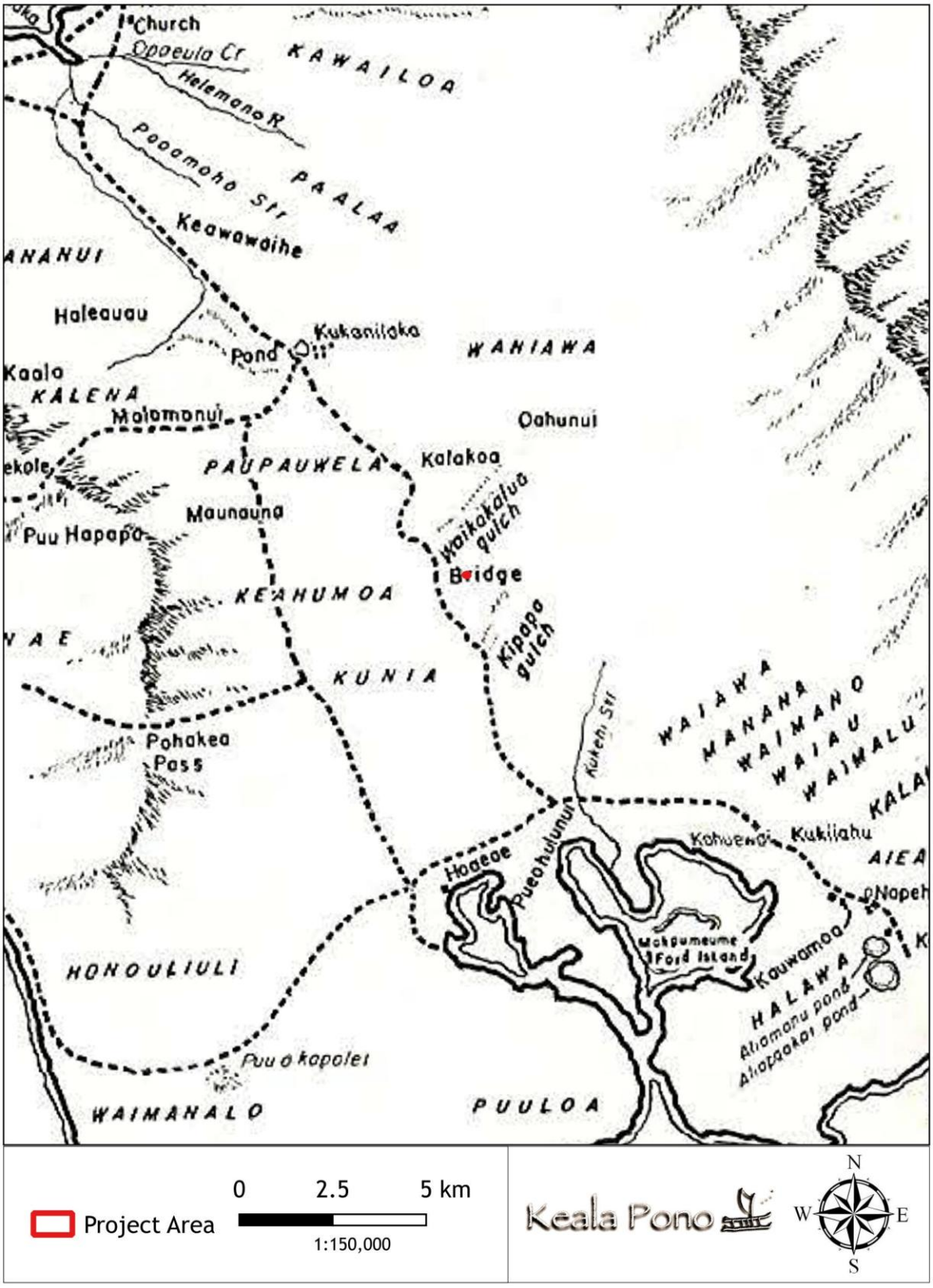

Figure 5. Trails in proximity to the project area (Rockwood n.d. in ʻĪʻī 1959:96).

the name Kīpapa means "place prone," recalling the fallen warriors who covered the plain after Oʻahu's victory in the fourteenth century. Sterling and Summers (1978) further preserve an account of this conflict:

> Mr. Kahikulani was a war leader of Puna, Hawaii. He came to battle against the chief Halemano whose cannibal meat dish became famous. He went inland and up to the very top of the mountain. He looked down on Kipapa stream where his warriors fought those of chief Halemano in a great battle. The sun had not set when all of Halemano's warriors were destroyed. The land and stream of Kipapa was reddened with the blood shed in this battle. That was the first time that the public highway became peaceful in that period that is gone. Kakikulani was a man of power in Puna, Hawaii. (Sterling and Summers 1978:20)

Another early battle at Kīpapa is described as pitting invading forces from Hawaiʻi Island against those of Oʻahu, led by Māʻilikūkahi, the 15th century high chief born at Kūkaniloko. As Fornander recounts:

> I have before referred to the expedition by some Hawaii chiefs, Hilo-a-Lakapu, Hiloa-Hilo-Kapuhi, and Punaluu, joined by Luakoa of Maui, which invaded Oahu during the reign of Mailikukahi. It cannot be considered as a war between the two islands, but rather as a raid by some restless and turbulent Hawaii chiefs.... The invading force landed at first at Waikiki, but for reasons not stated in the legend, altered their mind, and proceeded up the Ewa lagoon and marched inland. At Waikakalaua they met Mailikukahi with his forces, and a sanguinary battle ensued. The fight continued from there to the Kīpapa gulch. The invaders were thoroughly defeated, and the gulch is said to have been literally paved with the corpses of the slain, and received its name "Kīpapa," from this circumstance. Punaluu was slain on the plain which bears his name, the fugitives were pursued as far as Waimano, and the head of Hilo was cut off and carried in triumph to Honouliuli, and stuck up at a place still called Poo-Hilo. (Fornander 1996:89–90)

Another instance of conflict in the Waipiʻo area is the early 18th century unfought battle of the Keahumoa Plain, located south of Kīpapa Gulch which involved Kualiʻi who was a celebrated aliʻi, skilled, and victorious in the art of warfare. Kualiʻi was elderly at the time of the battle and was unable to walk. His servants made a net of strings and carried him to Keahumoa. This battle was instigated by brothers Kapaahulani and Kamakaaulani, and a peace agreement was made before any fighting ensued (Fornander 1918, vol. IV:364).

Later in the century, Waipiʻo again emerged as a center of political conflict. In 1783, the Maui chief Kahekili seized control of Oʻahu after overthrowing the mōʻī Kahahana, who descended "from the powerful 'Ewa chiefs' line" (Cordy 1981:207). In the aftermath of these events, the defeated Oʻahu chiefs plotted against the Maui leadership. It was during this time that Waipiʻo was given the epithet Waipiʻo kīmopō, or "Waipiʻo of secret rebellion," for its role as the staging ground of the conspiracy (Kamakau 1992:138). When the plot was exposed, Kahekili retaliated with brutal force against the districts of Kona and ʻEwa:

> … and when Ka-hekili learned that Elani of ʻEwa was one of the plotters, the districts of Kona and Ewa were attacked and men, women, and children were massacred, until the streams of Makaho and Niuhelewai in Kona and of Kahoaʻaiʻai in ʻEwa were choked with the bodies of the dead, and their waters became bitter to the taste, as eyewitnesses say, from the brains that turned the water bitter. All the Oʻahu chiefs were killed and the chiefesses tortured." (Kamakau 1992:138)

If Kamakau's account is accurate, Waipiʻo's population was devastated in the 1780s, and, as Cordy (1981:208) observes, "The Oʻahu society never rose again." Afterward, Kahekili and the Maui chiefs maintained control of Oʻahu into the 1790s. Kahekili died at Waikīkī in 1794, and the following year his son, Kalanikūpule, was defeated at the Battle of Nuʻuanu by Kamehameha I. In the aftermath of

that victory, Kamehameha redistributed the lands of Oʻahu, including Waipiʻo Ahupuaʻa among his favored supporters so that, as Kamakau (1992:376–377) wrote, "… land belonging to the old chiefs was given to strange chiefs and that of old residents on the land to their companies of soldiers, leaving the old settled families destitute."

Moʻolelo

As mentioned earlier, Hawaiian place names are connected to traditional stories through which the history of the places are preserved. These stories were referred to as moʻolelo:

> … a term embracing many kinds of recounted knowledge, including history, legend, and myth. It included stories of every kind, whether factual or fabulous, lyrical or prosaic. Moʻolelo were repositories of cultural insight and a foundation for understanding history and origins, often presented as allegories to interpret or illuminate contemporary life... Certainly many such [oral] accounts were lost in the sweep of time, especially with the decline of the Hawaiian population and native language. (Nogelmeier 2006:429–430)

Still, many traditional stories managed to be recorded as Hawaiian society transitioned from an oral culture to a written one, and among those recorded were several versions of moʻolelo connected to the Waipiʻo area.

ʻEwa Moku

As briefly discussed earlier, the boundaries of ʻEwa have been linked to the story of the gods Kāne and Kanaloa who, while surveying the islands, reached what is now known as Red Hill and saw the expanse of what is the ʻEwa Plain. To mark the boundaries of the area, they would throw a stone, and the boundary would be placed where the stone landed. Seeing the beautiful land below them, they thought to include as much as possible, throwing the stone as far as the Waiʻanae Mountain Range in the area known as Waimanalo. While in search of their flung stone, Kāne and Kanaloa were unable to find where it had landed. Because of this, the area was named ʻEwa due to the straying of the stone. Eventually, the stone was found on a hill and was named Pili o Kahe. This place marks the boundary between the ʻEwa and Waiʻanae Districts, Honouliuli Ahupuaʻa within ʻEwa, and Nānākuli in Waiʻanae (Nawaʻa in Sterling and Summers 1978:1).

In the epic tale of Hiʻiakaikapoliopele, Pele's sister Hiʻiaka crossed the ʻEwa Plain on her return journey to Kīlauea, Hawaiʻi, from Hāʻena, Kauaʻi, where she had been sent to retrieve Pele's lover, Lohiʻau-ipo (Lohiʻau). The full story was printed in the Hawaiian language newspaper *Ka Hōkū o Hawaiʻi* from September 18, 1924 to July 17, 1928. An excerpt pertaining to the ʻEwa Plain is included below (translations by Kepā Maly).

> … Aloha ka hau o Kaʻala
> ʻOia hau halihali ʻaʻala mauʻu nēnē
> Honi ai ke kupa o Puʻuloa
> He loa ka imina e ke aloha e…
> Beloved is the dew of Kaʻala
> That dew which bears the fragrance of the *nēnē* grasses
> [fragrant dew which] Kissed the natives of Puʻuloa
> One searches far for love…
> (*Ka Hōkū o Hawaiʻi* 1927 in Beardsley 2001:G-1)

The moʻolelo of Kahalaopuna also takes place in ʻEwa (Fornander 1918, vol. V:188–192). Kahalaopuna was a young woman who was from Mānoa. Betrothed to marry Kauhi, a man from

Koʻolau, he sent her numerous gifts before they were to be married. He soon became very angry when he heard rumors that Kahalaopuna had been unfaithful to him. Kauhi took Kahalaopuna to ʻEwa, leading her through the back valley and trails to a place known as Pohakea and a large lehua tree, where he took her life, even though she begged of her innocence. After burying her body under leaves of the lehua tree, Kauhi returned home. Meanwhile, Kahalaopuna's spirit had flown into the tree, and was able to chant to passers-by to tell her parents of her death and of her location. After she was brought back to life by her parents, Kauhi returned to Kahalaopuna, asking for forgiveness, however, she would not listen to him.

ʻEwa was known to be a very fruitful place, with abundant resources in the ocean and on land. Protecting such a place was the kiaʻi, or caretaker, of ʻEwa, named Kanekuaʻana (Kamakau 1991:83). Relied on by the ʻEwa kamaʻāina during times of scarcity of fish, her descendants built Waihau Heiau and lit fires for the cooking of offerings with the hope of blessings in the form of the various types of seafood:

> The *pipi* (pearl oyster)—strung along from Namakaohalawa to the cliffs of Honouliuli, from the *kuapa* fishponds of inland ʻEwa clear out to Kapakule. That was the oyster that came in from the deep water to the mussel beds near shore, from the channel entrance of Puʻuloa to the rocks along the edges of the fishponds. They grew right on the *nahawele* mussels, and thus was this *iʻa* obtained. Not six months after the *hau* branches [that placed a kapu on these waters until the *pipi* should come in] were set up, the *pipi* were found in abundance—enough for all ʻEwa—and fat with flesh. Within the oyster was a jewel (*daimana*) called a pearl (*momi*), beautiful as the eyeball of a fish, white and shining; white as cuttlefish, and shining with the colors of the rainbow—reds and yellows and blues, and some pinkish white, ranging in size from small to large. They were of great bargaining value (*he waiwai kumukuʻai nui*) in the ancient days, but were just "rubbish" (*ʻopala*) in ʻEwa. (Kamakau 1991:83)

Waipiʻo Ahupuaʻa

The plateau lands of Waipiʻo, particularly around Kīpapa Gulch, hold a prominent place in moʻolelo as this was a recurring setting of numerous and infamous battles (see power and warfare section). Because of the immense bloodshed and sorrow tied to the battles, the gulches came to be regarded as both sacred and feared ground. Tradition holds that the spirits of the slain continue to retrace their last march, manifesting as the huakaʻi pō, or night marchers.

The region is also remembered as a center for the traditional sport and skill of spear throwing. Chiefs of Līhuʻe were especially fond of this practice, and the most renowned instructors in the art were said to have come from there. The Hawaiian newspaper *Kuokoa*, in its August 26, 1865 issue, recounts a contest hosted by a chief of ʻEwa:

> The ruling chief of Ewa, named Piliwale, (of the royal family of Kumuhonua of Kukaniloko) had two daughters. The older was Kukaniloko, and the younger Kohepalaoa. The former was betrothed to the son of the chief of Maui, whose name was Luaia. The chief had declared that if any man be found who was skilled in spear throwing and could out-match his instructor then the reward would be his daughter. The chief's spear throwing instructor was Awa. He could hold ten spears in his right hand and ten in his left. He could, with two thrusts send ten at the back, two to trip his opponent and two at the navel (The skill of the ancients could not be surpassed.) (Sterling and Summers 1978:22–23)

Among the notable figures connected to Waipiʻo is Makanikeʻoe, who appears in the moʻolelo of Laukaʻieʻie. An excerpt from Moses Manu's *He Moolelo Kaao Hawaii no Laukaieie,* as translated by Maly (2003:105), follows below:

> Seeing this pit, swiftly ran back to Waipahu, where he looked at the source of the water, where it came out of the earth, and flowed to the estuary of Waikele. Makanikeoe dove into the water to determine its hidden source. He swam underground, and first arrived at Kahuaiki, at Waipio, for which the song is sung:
>
> Return to the coolness of Waipio,
>
> The cold water of Kahuaiki…
>
> He then dove under and came out on the plain of Puunahawele [sic, Punahawele], that barren and people-less plain. There he saw the source of the water of Kahuaiki. It is near a hidden stone (shaped like a hook pendant) and close to Kekuaolelo, along the trail which ascends straight up to Waipio uka (Maly 2003:105).

In the legend of Nāmakaokapaoʻo, the setting is the Waipiʻo lowland region known as kula o Keahumoa ("plain of Keahumoa"), the open plain situated just before reaching Kīpapa Gulch. Nāmakaokapaoʻo was the son of Pokai and Kaulukahai, "a great chief of Kahiki (the ancestral home of the Hawaiians)." Before his son's birth, Kaulukahai returned to Kahiki, leaving his Oʻahu family in hardship. Pokai later attracted the attention of a man named Pualiʻi, who married her, and together they lived on the plains of Keahumoa, where they cultivated ʻuala. Nāmakaokapaoʻo grew up there as "a small, brave child" who resented his stepfather. In defiance, he pulled up the ʻuala that Pualiʻi had planted at their home. When Pualiʻi attempted to strike him with an axe, Nāmakaokapaoʻo invoked a death prayer and killed him, casting his head into a cave at Waipouli near the shore of Honouliuli (Fornander 1919, Vol. 5:274–276).

Another notable moʻolelo is of the sleepy farmer Kalealuaka:

> One moʻolelo from Waipiʻouka involves a kāne named Kalealuaka, son of Kaopele, born in Waipiʻo during the early 17th century reign of Kākuhihewa on Oʻahu. Kaopele was known for cultivating lands while he was awake, but would go into deep sleeps for months at a time and the lands would go to waste. Once when he fell asleep and thought to be dead in Maeaea, Waialua and was taken to Kauaʻi to be sacrificed. But Kaopele awoke before this fate, and eventually married a Kauaʻi woman and has Kalelealuakā. When Kalelealuakā chose to visit Oʻahu, he came to an area in Waipiʻouka known as Keahumoe (Keahumoa), which was under great cultivation planted by his father. This ʻāina called Keahumoe in Waipiʻouka was filled with maiʻa, upland kalo, kō, and ʻuala... Kalelealuakā shot one of his magical arrows and where it landed he built a house known as Lelepua. This story is an exciting piece of evidence for what was once grown and can possibly be regrown in the uplands of Waipiʻo and Kīpapa. (Morgan 2014:54)

In her dissertation about Mililani, Olan Leimomi Morgan documented another moʻolelo, as told by kumu hula Elsie Ryder. Ryder noted Waipiʻo as the place where Pele would come to meet Kamapuaʻa, the pig demigod and the swimming hole where Pele would bathe at Oʻahunui (Morgan 2014:55).

ʻŌlelo Noʻeau

Like moʻolelo, traditional proverbs and wise sayings, also known as ʻōlelo noʻeau, have been another means by which the history of Hawaiian locales have been recorded. In 1983, Mary Kawena Pukui published a volume of close to 3,000 ʻōlelo noʻeau that she collected throughout the islands. The introductory chapter of that book reminds us that if we could understand these proverbs and wise sayings well, then we would understand Hawaiʻi well (Pukui 1983). A single ʻōlelo noʻeau was found referring specifically to Waipiʻo:

Waipiʻo kimopō.

Waipiʻo of the secret rebellion.

An epithet for the people of Waipiʻo, Oʻahu. After the death of Kahahana, the chiefs of Waipiʻo plotted to murder the chiefs of Maui, who were then in ʻEwa. Someone warned the Maui chiefs and all but one escaped. To throw off suspicion, the Waipiʻo chiefs claimed that the one was killed by someone from Kauaʻi. Later Kahekili learned that Elani, chief of ʻEwa, was in the plot, so he launched a massacre that choked the streams of Niuhelewai and Makaho in Palama with the bodies of the dead. (Pukui 1983:319)

Oli and Mele

The noteworthiness of specific locales in Hawaiian culture is further bolstered by their appearance in traditional chants. An oli refers to a chant that is done without any accompaniment of dance, while a mele refers to a chant that may or may not be accompanied by a dance. These expressions of folklore have not lost their merit in today's society. They continue to be referred to in contemporary discussions of Hawaiian history, identity, and values. Undoubtedly, printed compilations of traditional chants are but a scant glimmer of the multitude that were recited in the days of old.

In an account recorded by Abraham Fornander, *Moolelo o Kualii,* Waipiʻo is part of a list of ʻEwa place names in the great chant of Chief Kualiʻi, presented by Kapaahulani at the Keahumoa battlefield. The chant declares that Waipiʻo is known for "the arched house at Kauamoa" although what physical or metaphorical landmark this is in reference to remains unclear. Below is an excerpt of this chant (Fornander 1916):

O Kaweloiki puu oioi, Puu o Kapolei-e—
Uliuli ka poi e piha nei—o Honouliuli;
Aeae ka paakai o Kahuaiki—Hoaeae;
Pikele ka ia e Waikele—o Waikele;
Ka hale pio i Kauamoa—o Waipio;
E kuu kaua i ka loko awa—o Waiawa;
Mai hoomanana ia oe—o Manana.
He kini kahawai,
He lau kamano—o Waimano;
Ko ia kaua e ke au—o Waiau;
Kukui malumalu kaua—Waimalu;

Kaweloiki, the sharp-pointed hill. Hill of Kapolei.
Blue is the poi which appeases [the hunger] of Honouliuli;
Fine the salt of Kahuaike—Hoaeae;
Slippery is the fish of Waikele—Waikele;
The arched house at Kauamoa—Waipio;
Let us cast the net in the awa-pond—of Waiawa;
Do not stretch yourself at—Manana.
Many are the ravines,
Numerous the sharks, at Waimano;
We are drawn by the current of Waiau;
In the kukui grove we are sheltered—in Waimalu;

Printed during the last few months of 1895, *Buke Mele Lahui*, was a response to the recent overthrow of the Hawaiian monarchy in 1893. A collection of 105 songs, this publication served as a means of expression during a time of censorship. The song "Kue Hao O Ka Lanakila" mentions various places in ʻEwa and Waiʻanae (Figure 6).

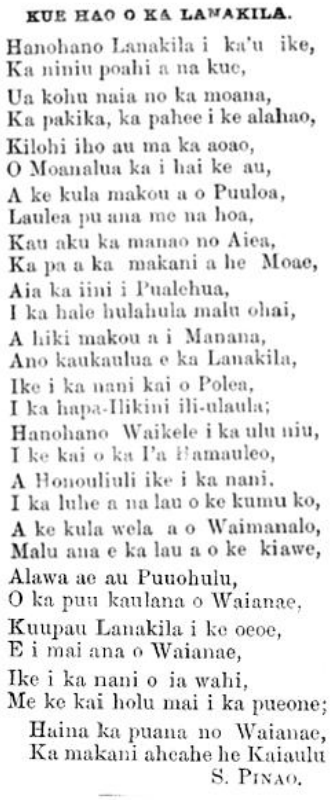

KUE HAO O KA LANAKILA.

Hanohano Lanakila i ka'u ike,
Ka niniu poahi a na kue,
Ua kohu naia no ka moana,
Ka pakika, ka pahee i ke alahao,
Kilohi iho au ma ka aoao,
O Moanalua ka i hai ke au,
A ke kula makou a o Puuloa,
Laulea pu ana me na hoa,
Kau aku ka manao no Aiea,
Ka pa a ka makani a he Moae,
Aia ka iini i Pualehua,
I ka hale hulahula malu ohai,
A hiki makou a i Manana,
Ano kaukaulua e ka Lanakila,
Ike i ka nani kai o Polea,
I ka hapa-Ilikini ili-ulaula;
Hanohano Waikele i ka ulu niu,
I ke kai o ka I'a Hamauleo,
A Honouliuli ike i ka nani,
I ka luhe a na lau o ke kumu ko,
A ke kula wela a o Waimanalo,
Malu ana e ka lau a o ke kiawe,
Alawa ae au Puuohulu,
O ka puu kaulana o Waianae,
Kuupau Lanakila i ke oeoe,
E i mai ana o Waianae,
Ike i ka nani o ia wahi,
Me ke kai holu mai i ka pueone;
Haina ka puana no Waianae,
Ka makani aheahe he Kaiaulu

S. PINAO.

Figure 6. Mele that mentions places in ʻEwa (Hawaiian Historical Society 2003:98–99).

The mele, *Waipiʻo*, was written in 1923 by Mekia Kealakai and George Allen for Mrs. Irene Kahalelaukoa Holloway referencing her home in Kahuaiki, Waipiʻo. This mele was shared by Olan Leimomi Morgan in her thesis:

ʻO kāu hana mau nō ia	It is your usual way
ʻO ka hoʻokipa i ke aloha	To welcome all with love,
A naʻu i hoʻoheno mua	I have been dearly loved,
Ka makani o Laulani	(By) the breeze of Laulani.
Hui:: He inoa kēia no Waipiʻo	Chorus: This is a praise for Waipiʻo,
ʻO Kahalelauokekoa	(And) Kahalelauokekoa,
I puia i ke ʻala	Imbued with fragrance
Onaona i ka ihu.	So sweet to smell.
E ka ʻia hāmau leo	The fish that silences the voice
E hiʻipoi mālie nei	Embraces gently
I ka mea kamehaʻi	The wondrous one
O ua ʻāina nei.	Of this land. (Morgan 2014:89)

‘Ewa and Waipiʻo in the Historic Era

When the first Westerners arrived in the Hawaiian archipelago in 1778, the islands were not yet united under one sovereign. At that time, Waipiʻo and the entire island of Oʻahu were under the rule of Chief Kahahana. Chief Kahahana’s reign was ended in 1783 with the invasion and victory of Chief Kahekili of Maui. This would also be the end of Oʻahu’s independence as a separate island kingdom. While Kahekili ruled over Oʻahu, the Oʻahu chiefs tried to organize a revolt, but their plan was exposed, and they were not successful. In retribution, Kahekili slaughtered the men, women, and children of ‘Ewa District and of the neighboring Kona District. Fornander (1916–1918) recorded this story and pointed out that Kahahanaʻs brother-in-law, who would betray him lived in Waikele Ahupuaʻa of ‘Ewa.

Following the death of Chief Kahekili in 1794, authority over Oʻahu passed to his son Kalanikūpule. The next year, Kamehameha I of Hawaiʻi Island launched his invasion, advancing into Nuʻuanu Valley and meeting Kalanikūpule’s forces at Nuʻuanu. There, Kamehameha’s army overwhelmed Kalanikūpule’s warriors, securing control of the islands from Hawaiʻi to Oʻahu (Kanahele 1995). During this period, the population of Waipiʻo had been sharply reduced, first by the upheavals of warfare and then by the devastating introduction of foreign diseases, most notably the 1804 epidemic (maʻi ʻōkuʻu). The loss of life and disruption to agricultural cultivation severely impacted food production, contributing to a famine later documented by John Papa ʻĪʻī, who was a prominent figure in the Hawaiian Kingdom and a key chronicler of its past. His life was closely tied to Waipiʻo, where he recorded his family’s settlement following Kamehameha’s consolidation of power on Oʻahu.

In August of 1800 ʻĪʻī was born on lands named for his uncle, Papa ʻĪʻī. Papa, who had been granted Hanaloa Fishpond and additional parcels from Kamehameha after the Battle of Nuʻuanu, had later transferred the property to his cousin, Wanaoa (also known as Pahulemu and Kalaikane), John Papa’s mother (ʻĪʻī 1959:20).

In *Fragments of Hawaiian History*, ʻĪʻī offers valuable insight regarding life in Waipiʻo Ahupuaʻa. He recalls his family’s agricultural labor, noting how the “family [went] to Kipapa from Kumelewai by way of upper Waipio to make ditches for the farms” (ʻĪʻī 1959:28). One of his most striking accounts is of a famine. During this period, residents of Waipiʻo survived on upland foods such as ʻōhiʻa ʻai, kī, and uhi. When the famine ended, the harvest of new crops was temporarily forbidden until the community gathered to give thanks. As ʻĪʻī explained:

> The removal of new crops from the taro patches and gardens was prohibited until all of the people had gathered and the farmers had joined in thanks to the gods. This prohibition was called kapu ʻohiʻa. (ʻĪʻī 1959:77)

On the day of Kāne, an offering of kalo greens and other foods was made to lift the restriction, after which each farmer could finally harvest for his family’s needs, ending this enduring period of hunger (ʻĪʻī 1959:77).

John Papa ʻĪʻī was both an invaluable Hawaiian historian and a pivotal political figure. At ten years old, he entered the royal court as a companion to the future Kamehameha II, Liholiho, and went on to serve as an attendant and advisor to Kamehameha I and his successors. ʻĪʻī later held high-ranking government positions, including membership in the House of Nobles and the Privy Council, and he served on the Board of Land Commissioners to Quiet Land Titles during the Māhele, where his work shaped land tenure in Hawaiʻi. From 1846 to 1852 he was an Associate Justice of the Supreme Court, helping draft the Constitution of 1852, and he continued on the bench until resigning in 1864 (Day 1984:54).

Early Historical Accounts of the ʻEwa Region

It is recorded that in 1778 Captain James Cook became the first Westerner to see the Hawaiian Islands. Following Cook, a wave of other western explorers landed on Hawaiʻi's shores. Among these early visitors was Captain George Vancouver, who described the ʻEwa landscape from his vantage point anchored off the entrance to West Loch, in 1793.

> The part of the island opposite to us was low, or rather only moderately elevated, forming a level country between the mountains that compose the east [Koolau] and west [Waianae] ends of the island. This tract of land was of some extent, but did not seem to be populous, nor to possess any great degree of natural fertility; although we were told that, at a little distance from the sea, the soil is rich, and all the necessaries of life are abundantly produced. …Mr. Whitbey observed [sic], that the soil in the neighborhood of the harbor appeared of a loose sandy nature; the country low for some distance, and, from the number of houses within the harbour, it should seem to be very populous; but the very few inhabitants who made their appearance were an indication of the contrary. (Vancouver 1801, vol. III:361, 363)

Seaman A. Campbell moved to Hawaiʻi to recover from frostbite, and his 1819 account includes a description of ʻEwa, also noting the rich soil of the region:

> We passed by foot-paths winding through an extensive and fertile plain, the whole of which is the highest state of cultivation. Every stream was carefully embanked, to supply water for the taro beds. Where there was no water, the land was under crops of yams and sweet potatoes. The roads and numerous houses are shaded by cocoa-nut trees, and the sides of the mountains covered with wood to a great height. We halted two or three times, and were treated by the natives with the utmost hospitality. (Campbell 1819:145)

Similar to earlier accounts, British traveler G.F. Mathison, visiting the "Sandwich Islands" in 1821–1822, noted the abundance of resources within the ʻEwa Plain:

> The adjoining low country is overflowed both naturally and by artificial means, and is well stocked with tarrow-plantations [sic], bananas, etc. The land belongs to many different proprietors; and on every estate there is a fishpond surrounded by a stone wall, where the fish are strictly preserved for the use of their rightful owners, or tabooed, as the natives express it. One of particular dimensions belongs to the King. (Mathison 1825 in McAllister 1933:109)

During a visit to Hawaiʻi in 1825, botanist James Macrae offered the following remarks about Puʻuloa and the surrounding area:

> The neighborhood of the Pearl River is very extensive, rising backwards with a gentle slope towards the woods, but is without cultivation, except round the outskirts to about half a mile from the water. The country is divided into separate farms or allotments belonging to the chiefs, and enclosed with walls from four to six feet high, made of a mixture of mud and stone. (Macrae 1922 in McAllister 1933:31)

Captain Jacobus Boelen's 1828 narrative of Puʻuloa discusses traveling to ʻEwa from Honolulu and the shallow reefs that shelter the bay. Like previous accounts, he notes the highly fertile soils which are heavily cultivated in kalo and early sugarcane crops:

> On 26 February, in the company of some good friends and acquaintances, we made an excursion to what the Indians called the harbor of Oporooa [Puʻuloa], which I believe means approximately "Pearl River"—at least that is what the foreigners call this bay. This is because the Indians sometimes find pearls there, which they offer for sale in Honoruru. We departed from Honoruru at ten o'clock in the morning in two boats, sailed out of the harbor to sea, and rowed a distance of about three quarters or one league toward the west

> along the coral reef that encircles the whole south coast of Woahoo. We passed over the bar of Oporooa harbor. The bar is no more than ten feet deep at low tide, from which one can conclude that in a rough sea high waves will break against it. Even at high tide the passing of this bar can be very dangerous unless the sea is calm. Therefore, on the advice of our pilot, a native of the island, we remained for a time outside the bar and then rowed hard across it.
>
> We found ourselves in a rectangular bay, or rather a lake with several arms, consisting of several deep bights. Two of the most important of these stretched to the northeast, while the one to the northwest cut the farthest….The soil in this region seemed at first sight to be exceptionally fertile, and the land consisted of meadows and *taro* and sugar [cane] fields….
>
> We rowed to the end of the harbor of Opooroa, or the so-called Pearl River, and landed with the boats near a small Indian village with the name of Mannonco….In the meantime, we strolled through the surrounding land, which everywhere was very fertile, with cultivated fields of *tarro*, maize, and also sugar cane. (Boelen 1988:64–65)

While missionaries such as William Ellis described the uplands of ʻEwa in the 1820s as largely uninhabited (Ellis 1963:7), other accounts suggest otherwise. Kamakau noted that under Kamehameha III, "Waipiʻo had school houses near the coast and in the uplands" (Kamakau 1992:424), indicating continued mauka settlement.

By the 1830s, cattle grazing was introduced to Waipiʻo's uplands, and by 1847 complaints arose about damage from stray animals (Bishop 1901:87). The herds stripped vegetation and caused erosion, with storm runoff carrying soil into the lagoons of Pearl Harbor, gradually shoaling the waters (Bishop 1901:87).

Waipiʻo and the Changes in Land Tenure

The change in the traditional land tenure system in Hawaiʻi began with the appointment of the Board of Commissioners to Quiet Land Titles by Kamehameha III in 1845. The Māhele took place during the first few months of 1848 when Kamehameha III and more than 240 of his chiefs worked out their interests in the lands of the Kingdom. This division of land was recorded in the Māhele Book. The King retained roughly a million acres as his own as Crown Lands, while approximately a million and a half acres were designated as Government Lands. The Konohiki Awards amounted to about a million and a half acres, however title was not awarded until the konohiki presented the claim before the Land Commission.

In the fall of 1850 legislation was passed allowing citizens to present claims before the Land Commission for parcels that they were cultivating within the Crown, Government, or Konohiki lands. By 1855 the Land Commission had made visits to all of the islands and had received testimony for about 12,000 land claims. Ultimately between 9,000 and 11,000 kuleana land claims were awarded to kamaʻāina totaling only about 30,000 acres and recorded in ten large volumes.

Although the Māhele had specifically set aside lands for the King, the government, and the chiefs, this did not necessarily alienate the makaʻāinana from their land. On the contrary, access to the land was fostered through the reciprocal relationships which continued to exist between the commoners and the chiefs. Indeed, the ahupuaʻa rights of the makaʻāinana were not extinguished with the advent of the Māhele, and Beamer points out that there are "numerous examples of hoaʻāina living on Government and Crown Lands Post-Mahele which indicate the government recognized their rights to do so" (Beamer 2008:274).

> Hoaʻāina who chose not to acquire allodial lands through the Kuleana Act continued to live on Government and Crown Lands as they had been doing as a class previously for

> generations. Since all titles were awarded, "subject to the rights of native tenants." The hoaʻāina possessed habitation and use rights over their lands. (Beamer 2008:274)

For those commoners who did seek their individual land titles, the process that they needed to follow consisted of filing a claim with the Land Commission; having their land claim surveyed; testifying in person on behalf of their claim; and submitting their final Land Commission Award (LCA) to get a binding royal patent. However the vast majority of the native population never received any LCAs recognizing their land holdings due to several reasons such as their unfamiliarity with the process, their distrust of the process, and/or their desire to hold to their traditional way of land tenure regardless of how they felt about the new system. In 1850, the king passed another law, this one allowing foreigners to buy land. This further hindered the process of Hawaiians securing lands for their families.

The majority of LCAs granted in Waipiʻo were concentrated along the shoreline with 19 claims and 11 awards issued in the uplands of Waipiʻo Uka, all confined to Kīpapa Gulch. These mauka parcels included house lots, pasture areas, cultivated fields, and sections of forest clearings. John Papa ʻĪʻī secured the largest holding in the ahupuaʻa, LCA 8241, which encompassed nearly 20,540 acres and included a register list of "the people living on the land of Waipiʻo ʻEwa in 1848" (Native Register 1847–1853 vol. 5:512–517). After his death in 1870, his lands, including his Waipiʻo holdings, passed to his daughter Irene ʻĪʻī Brown.

Another significant award in Waipiʻo went to Hawaiian high chief Abner Pākī, father of Bernice Pauahi Bishop, whose LCA 10613 included the 350-acre ʻili of Hanaloa in Waipiʻo (Waihona ʻĀina 2025). William Harbottle likewise received an award (LCA 2937) for two acres at Hanapouliʻili. In addition to these large grants, 99 individual land claims were filed by the residents of Waipiʻo, although not all were awarded. These records show the predominance of subsistence agriculture in the ahupuaʻa, with no fewer than 312 loʻi documented among the claims.

By the mid-19th century, Waipiʻo records note 43 moʻo containing additional loʻi, along with four coastal fishponds, 53 claims for kula lands, and 25 for ʻokipuʻu (forest clearings). These figures highlight the dominance of wetland kalo cultivation, supplemented by dryland crops such as maiʻa, ʻuala, and ʻawa, as well as the use of forest clearings for gathering resources and pasturage (Lucas 1995:60, 82).

The Late Historic Era in ʻEwa

The late-18th and early-19th centuries marked Hawaiʻi's entry into global trade. Among the kingdom's most sought-after exports was sandalwood (*Santalum* sp.), or ʻiliahi, valued in China for its fragrance and use in household goods, incense, perfumes, and medicines (St. John 1947). The central plains of ʻEwa, mauka of the current project area, were a key source of this resource. Missionary Sereno Bishop (1901) recalled his journeys across central Oʻahu in the 1830s:

> Our family made repeated trips to the home of Rev. John S. Emerson at Waialua during those years. There was then no road save a foot path across the generally smooth upland. We forded the streams. Beyond Kipapa gulch the upland was dotted with occasional groves of Koa trees. On the high plains the ti plant abounded, often so high as to intercept the view. No cattle then existed to destroy its succulent foliage. According to the statements of the natives, a forest formerly covered the whole of the then nearly naked plains. It was burned off by the natives in search of sandalwood, which they detected by its odor burning. (cited in Sterling and Summers 1978:89)

Ranching, rice, sugarcane and pineapple agriculture would also change the ʻEwa landscape in the late historic era.

Ranching

In 1793, Captain George Vancouver introduced livestock to Hawai‘i, bringing cattle and sheep aboard the *Discovery* as a goodwill gift for Kamehameha I. This gift included four cows, two bulls, four ewes, and two rams. Rough seas and stifling heat during the voyage killed several of the animals, but to protect the herd’s growth, Kamehameha placed a ten-year kapu on slaughtering cattle. The ban worked, and the herds multiplied. When the kapu was lifted, their numbers swelled so quickly that they became both destructive and dangerous.

By the 1830s, cattle ranching had spread into the uplands of Waipi‘o (Bishop 1901). Unrestrained grazing devastated gardens and struck fear into local residents, who risked attack from roaming wild cattle. By 1847, the situation had grown so severe that Waipi‘o’s upland inhabitants petitioned John Young, then Minister of the Interior, to intervene and control the problem of stray herds. Bishop (1901:87) further observed that the impacts extended beyond the uplands, affecting the coastal areas as well.

One of the earliest ranches in the region was Lihue Ranch, which was established in 1856 by John Meek, who leased large parcels in Waikele Ahupua‘a (Taylor 1922:221). Figure 7 illustrates the location of this ranch to the west of the current study lands within the sacred Līhu‘e region. Vestiges of ranching walls can still be found throughout the ‘Ewa Plain.

The sandalwood trade and subsequent introduction of cattle soon after devastated the forests of the region. As Judd (1933) notes, new ‘iliahi seedlings never fully recovered, leaving the uplands permanently altered.

The Oahu Railway and Land Company (OR&L)

The OR&L began in the late 1800s as a means to connect the northern and western O‘ahu sugar mills with the port of Honolulu (Treiber 2003:5). In addition to serving ‘Aiea, Waipahu, ‘Ewa, Wai‘anae, and Kahuku sugar mills, the OR&L often carried passengers traveling from Central O‘ahu to Honolulu (Treiber 2003:5).

In 1906, OR&L extended their railway from Waipahu to Wahiawā, so that pineapples could be transported from the fields to the new Dole cannery constructed at Iwilei in Honolulu. During World War II (1941–1945), freight traffic boomed and military cargo such as ammunition, explosives, petroleum products, and other supplies were transported by the OR&L (Treiber 2003:9). By 1947, most of the OR&L tracks were abandoned and rail transportation transferred to the trucking industry and the road system that had been significantly improved during World War II (Treiber 2003:11).

Sugarcane, Rice, and Pineapple Cultivation

In 1897, the O‘ahu Sugar Company, newly established at the time, secured a lease of 3,400 acres within Waipi‘o (Condé and Best 1973:313). Just a few years earlier, the OR&L had obtained rights to a corridor through Kīpapa Gulch, enabling the transport of sugar and pineapple from Wahiawā to Honolulu.

In the 1880s, Chinese laborers began acquiring large portions of land in ‘Ewa to convert to rice paddies. Since the Native Hawaiian population in ‘Ewa had declined significantly by this time, there was less of a demand for taro, and many former lo‘i kalo were left fallow (Chong 1998). These parcels were sold or leased to Chinese immigrants and by 1882, “every available inch of ground along the shore west of Honolulu seemed to be utilized as rice fields” (Damon 1882 in Coulter and Chun 1937:20).

Pineapple cultivation was also present in Waipi‘o during the first half of the 20th century. Hawai‘i’s commercial pineapple industry began modestly in 1901, when James Dole established the Hawaiian

Pineapple Company on 12 acres in Wahiawā. Within three decades, pineapple had become the islands' second largest industry. By 1945, much of Waipiʻo Ahupuaʻa was planted in pineapple and sugarcane. After World War II, however, markets shifted from canned to fresh fruit, and by the late 1960s urban growth was overtaking the central upland plateau, bringing commercial pineapple cultivation to a close. Although some upland areas of Waipiʻo were still farmed in 1985, much of the land had already given way to residential development.

Reverend Abraham Akaka performed a dedication ceremony for the proposed Mililani development in 1968 (Lawyer 2003), following which developer Castle & Cooke's subsidiary constructed the first master-planned development in Hawaiʻi (Morgan 2014). The endeavor cost $3.85 billion to develop 16,000 homes on 3,500 acres of former agricultural lands (Gomes 2008).

Historic Maps

Historic maps help in visualizing what the project lands were like in times past and depict the changes that have taken place in the region over the years. The series of six maps presented here illustrate the project area at the turn of the 19th century and into the 20th century. The earliest map found for this region from 1873, is a survey map which depicts the study region in the late 19th century (Alexander 1873; Figure 7). The map illustrates the numerous gulches west of the project area including the nearby Waikakalaua Gulch. Also to the west of the project area, Upper Pouhala is labeled as Crown Lands with Captain J. Meek's Lihue Ranch situated to the southwest within the sacred Līhuʻe (labeled Lihue) region. Located to the far south of the current project area is Eo Fishpond along the Middle Loch of Pearl Harbor.

Another early map shows multiple roads surrounding the project area (Lyons 1876; Figure 8). These roads likely followed the routes of the earlier trails depicted in Figure 5. The map depicts LCAs and land grants, including LCA 8241 awarded to John Papa ʻĪʻī, upon which the current project area is situated. It also marks the location of a ranch house believed to have been occupied by the daughter of John Meek, Elizabeth Meek Crabbe, and her husband, Horatio Crabbe. Identified on the map as "Crabbe," the house is shown just northwest of Kokoloea:

> [A] USGS benchmark (271 m, or 888 ft, above sea level) and 19th century survey landmark in this area (it was used as a benchmark in Crown Lands surveys undertaken in the late 1800s). It was a point of reference for an ulu maika field named Kapalauauai... and was also the site of the "old Dowsett ranch house"... Kokoloea was also the name of a chief of the Lo class. (Tomonari-Tuggle and Blankfein 1997:13)

A map produced one year later depicts Waipiʻo Ahupuaʻa with its gulches clearly delineated (Brown 1877; Figure 9). The subject property is shown within a tract labeled "Grassy Plain," positioned just north of Kīpapa Gulch, while an adjacent area to the south is marked "Smooth Grassy Plain." A survey triangle appears just south of the current project area with the notation "W.M. Elevation 717 feet." On historic survey maps, "W.M." referred to a Water Mark elevation, a fixed reference point used by surveyors to anchor their measurements to a known height above sea level. The upper northeast portion of the ahupuaʻa is designated "Very Irregular Ohia and Koa Forest," suggesting that this tract predated its later designation as the ʻEwa Forest Reserve.

Another map, compiled toward the end of the 19th century (Kanakanui 1894; Figure 10), provides a more detailed representation of land tenure in the uplands of Honouliuli and Waipiʻo. The project area is depicted within open lands situated between Waikele and Kīpapa Gulch, now identified as part of the award to John ʻĪʻī (LCA 8241). Where the earlier map had marked a "W.M. Elevation," this 1894 survey instead labels the reference triangle as "Waipio." This map also depicts the road

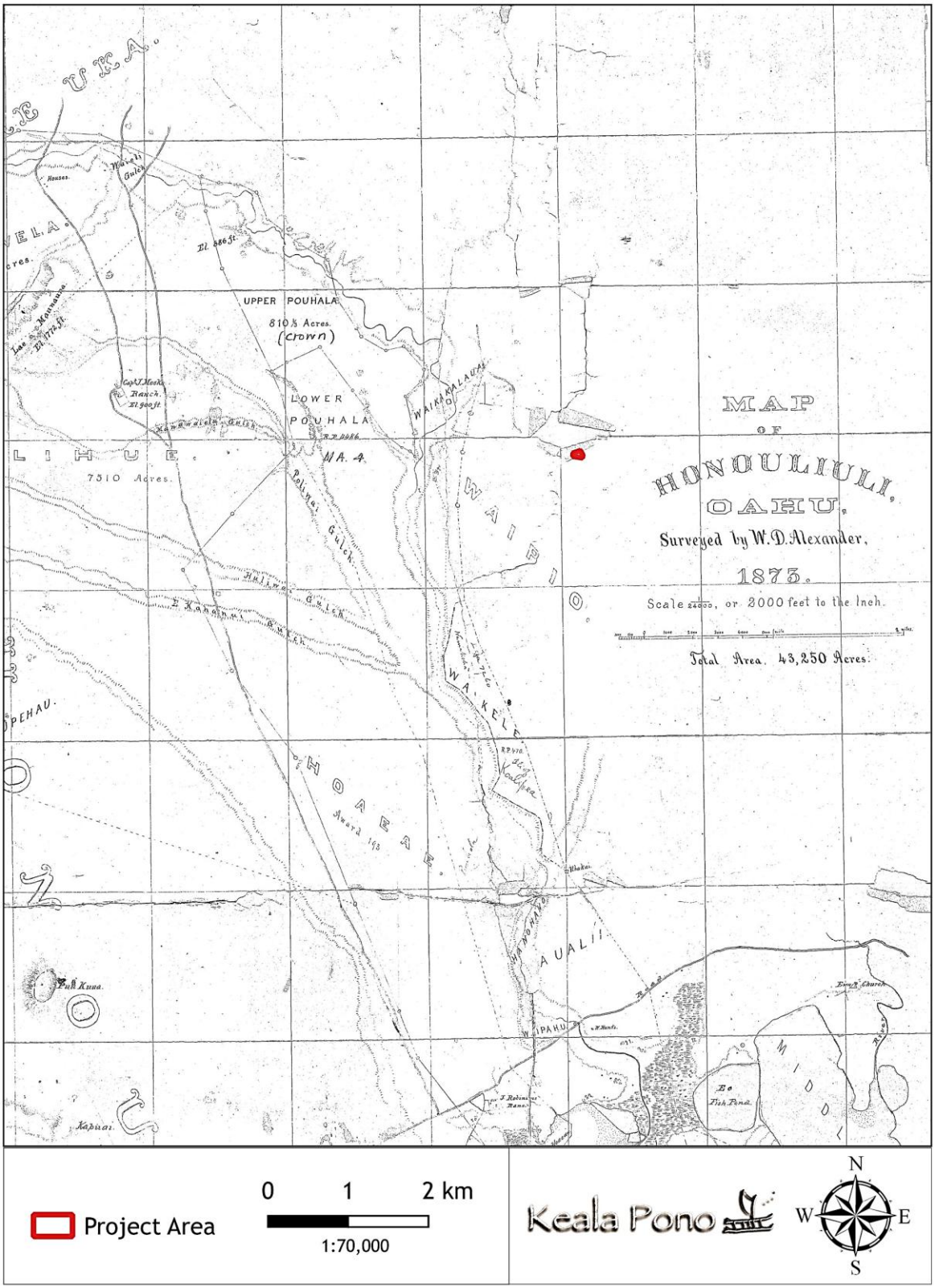

Figure 7. Portion of an early map of Honouliuli (Alexander 1873).

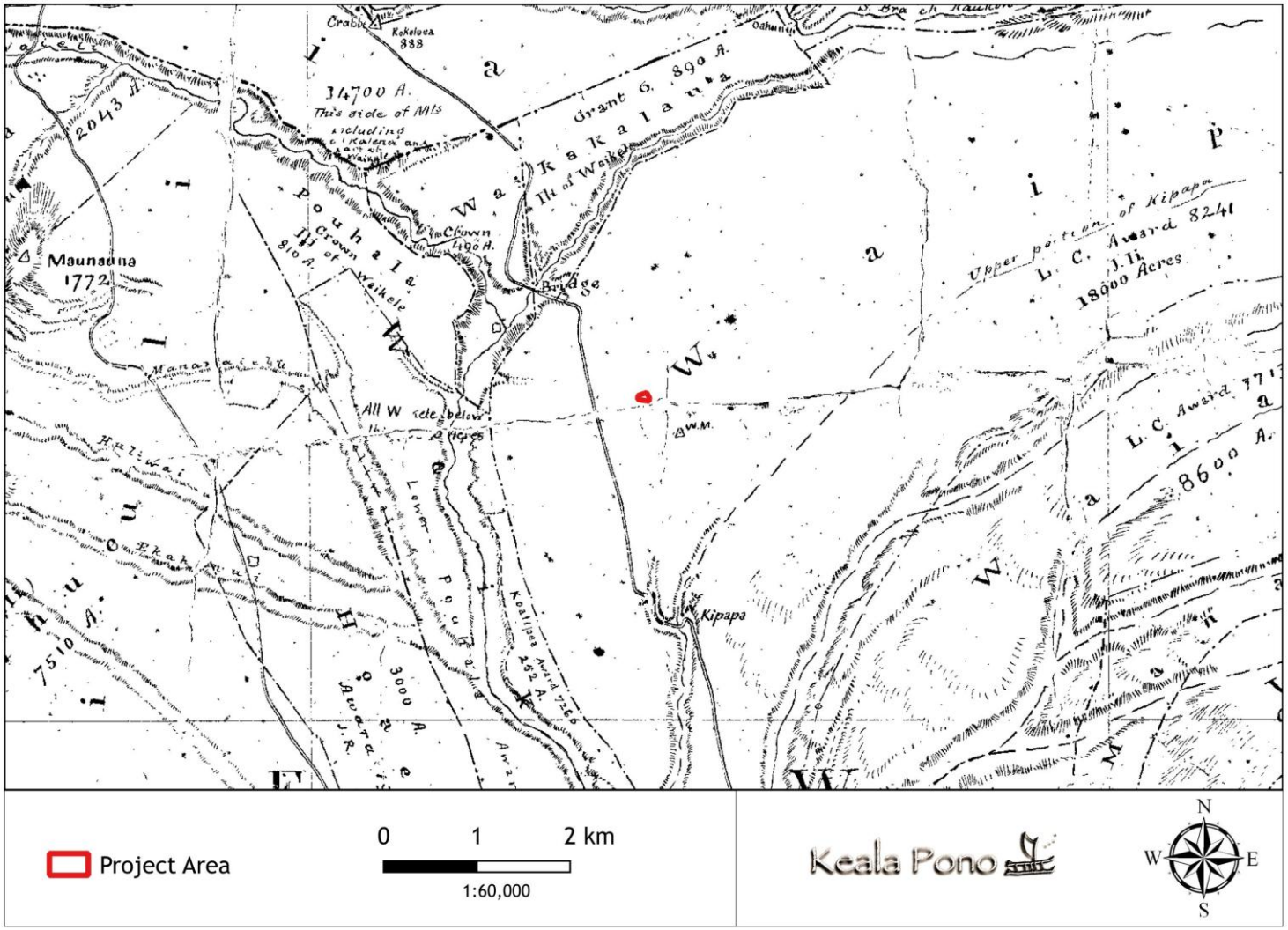

Figure 8. Portion of an Oahu Government Survey map showing the study region (Lyons 1876).

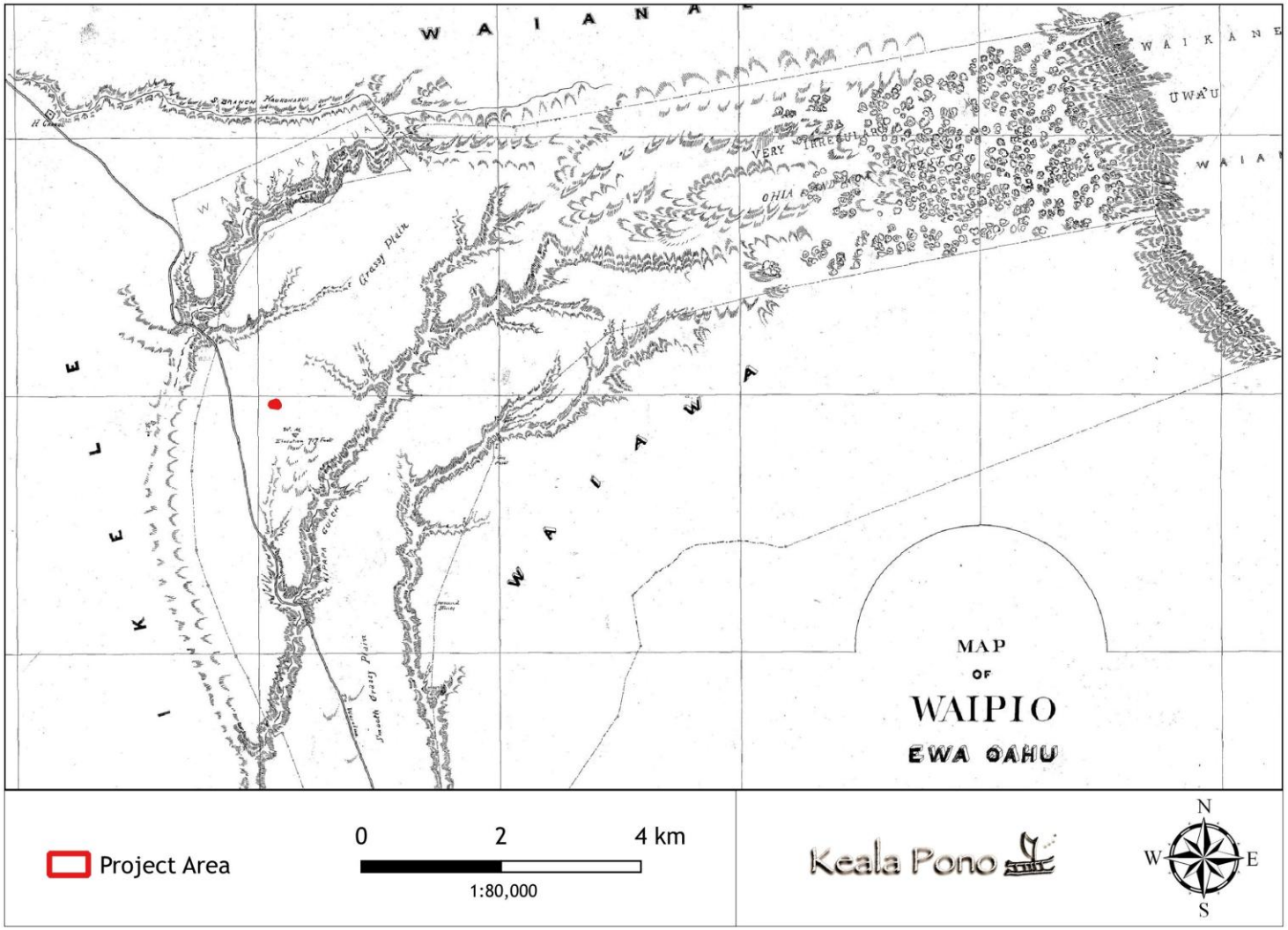

Figure 9. Portion of an early map of Waipi‘o showing the project area (Brown 1877).

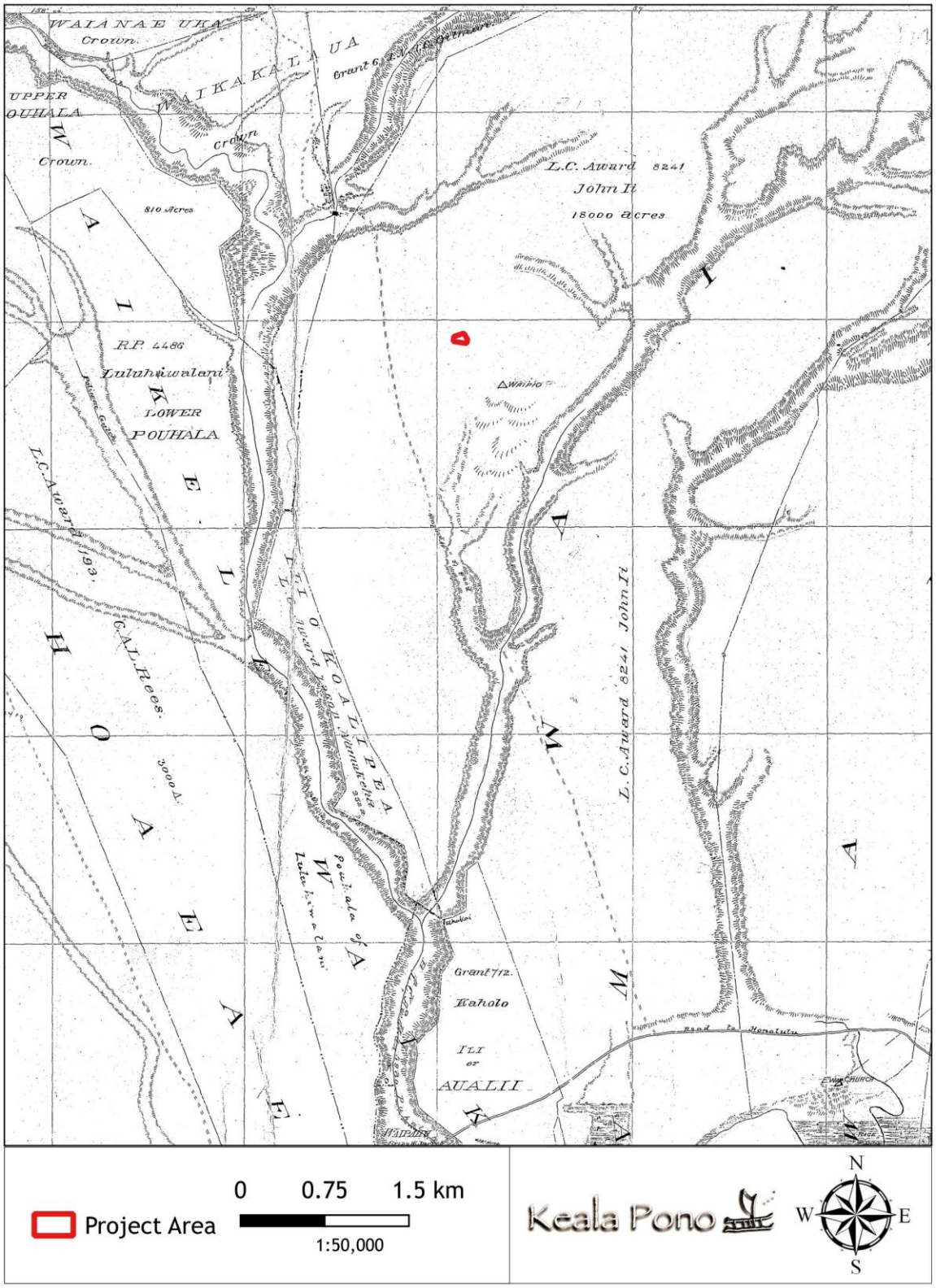

Figure 10. Portion of an early government survey map of Pearl Harbor and ʻEwa (Kanakanui 1894).

located to the west of the current project area is now labeled "Road to Waialua" Overall, the map indicates that Waipiʻo and the adjoining uplands remained largely undeveloped as the region approached the turn of the 20th century.

A map dating to the early 1900s (Wall 1902; Figure 11), depicts two zones of pineapple plantations; one north of the project area which overlaps with an area labeled "U.S. Military Reservation" in the current location of Schofield Barracks; and another to the east within John Papa ʻĪʻī's LCA 8241. To the northwest, public lands are marked "Crown," while to the southeast the site of Puʻu Pōhaku is shown, which served as a prominent local landmark used in surveys in the early 20th century. The "Road to Waialua" remains labeled, and Leilehua Ranch appears to the northwest, also within the U.S. Military Reservation. The project area itself is shown as grazing land, situated just north of Oʻahu Sugar Company lands labeled "Oahu Plantation." Overall, the map illustrates that the region of the project area had undergone notable changes in the eight years since the previous survey.

A final map from the 1930s shows significant development of infrastructure on the military reservation to the northwest of the project area, which is now labeled as "Schofield Barracks" (Mahinske 1935; Figure 12). Wheeler Army Airfield (WAAF) is established by this time and labeled as "Wheeler Field" with residences along the northern boundary and hangars positioned along the northern edge of the airfield. During the mid-1930s, WAAF was still formally a part of Schofield Barracks, but physically separated from the main base by Kunia Road. Wahiawā town has also developed with residential neighborhoods and roads located to the northeast of Wheeler Field. The OR&L is also depicted as extending between Schofield Barracks and Wahiawā town.

Previous Archaeological and Cultural Studies

The earliest archaeological investigation of Waipiʻo was conducted by J.G. McAllister (1933) during his island wide study under the auspices of the Bernice Pauahi Bishop Museum. This study documented important sites, including heiau, at a time when many traditional Hawaiian structures were still prevalent. McAllister (1933) provided information on sites and natural features in Waipiʻo Ahupuaʻa. Although none are near the current project area, three are mentioned here for their cultural and historical significance to the greater region.

McAllister documented two heiau, Moaʻula (Site 130) and Heiau o ʻUmi (Site 131), which were reported as being located in or near Kīpapa Gulch, roughly 1.6 km southeast of the current project area. McAllister (1933:107) described Moaʻula (Site 130) as located "on the Honolulu side of Kipapa Gulch just above Heiau o Umi, to which it is said to be a companion structure." McAllister (1933:107) described the location of Heiau o ʻUmi (Site 131) as being "just northeast of the government road in the bottom of Kipapa Gulch on the slight elevation at the foot of the pali on the Honolulu side". Both heiau were noted to be obscured by sugarcane during the time of the survey. SHPD's Hawaiʻi Cultural Resource Information System (HICRIS) database indicates that both sites have since been destroyed.

Site 132 refers to both Waikakalaua and Kīpapa gulches. McAllister references Fornander stating "Waikakalaua is the place where the invading chiefs from Hawaii met Mailikukahi, moi of Oahu, in battle."

More recent archaeological studies offer additional insight into land use of Waipiʻo. While no previous archaeological work has been conducted within the current project area, a number of studies have been completed nearby. The following discussion summarizes the findings of archaeological work conducted within 0.5 km of the project area (Figure 13; Table 1) and is based on archaeological reports found at the SHPD library in Kapolei, Hawaiʻi. State Inventory of Historic Places site numbers are prefaced with 50-80-09 (Figure 14; Table 2).

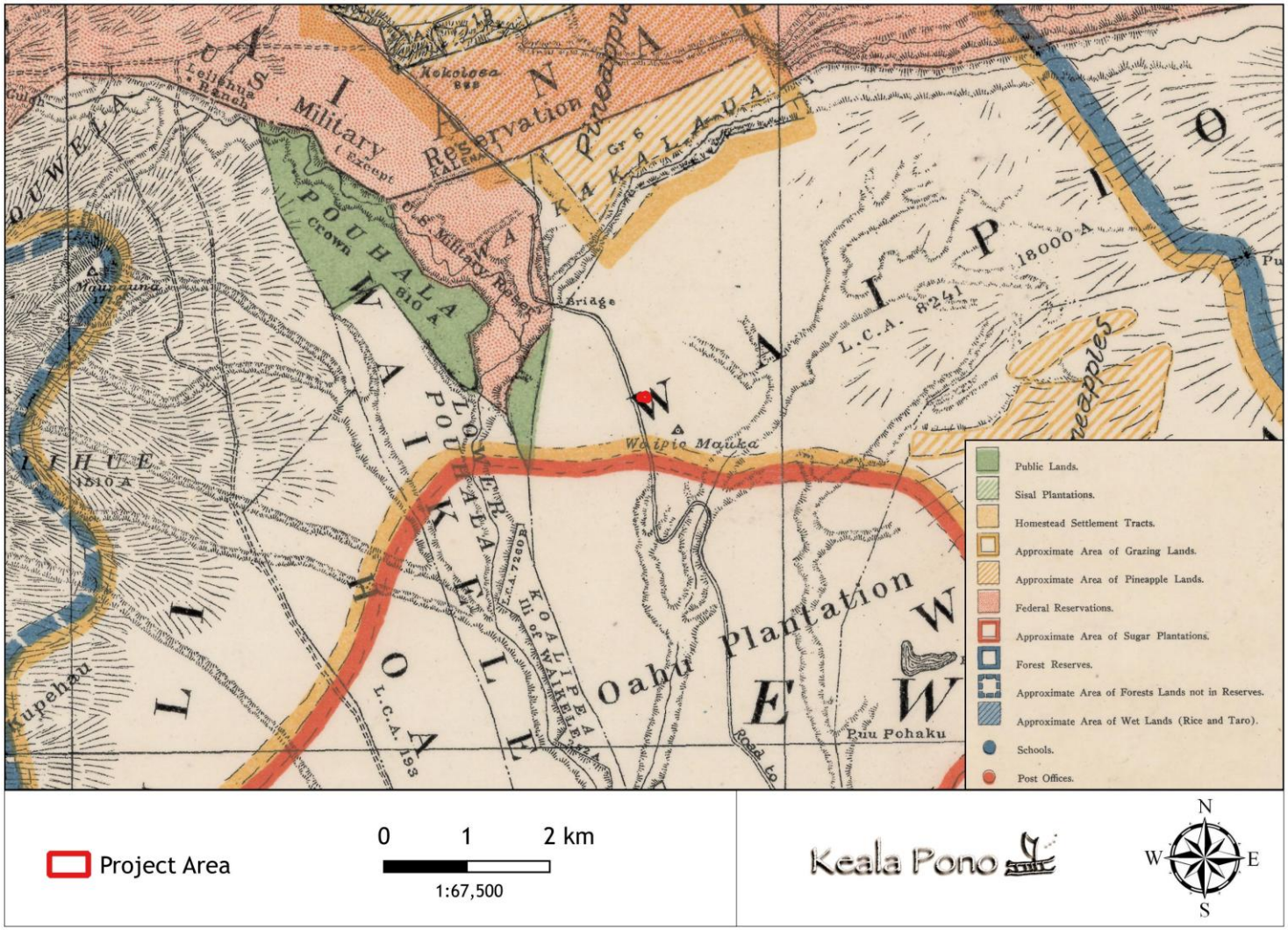

Figure 11. Waipi‘o section of a Hawaii Territory Survey map showing the project area (Wall 1902).

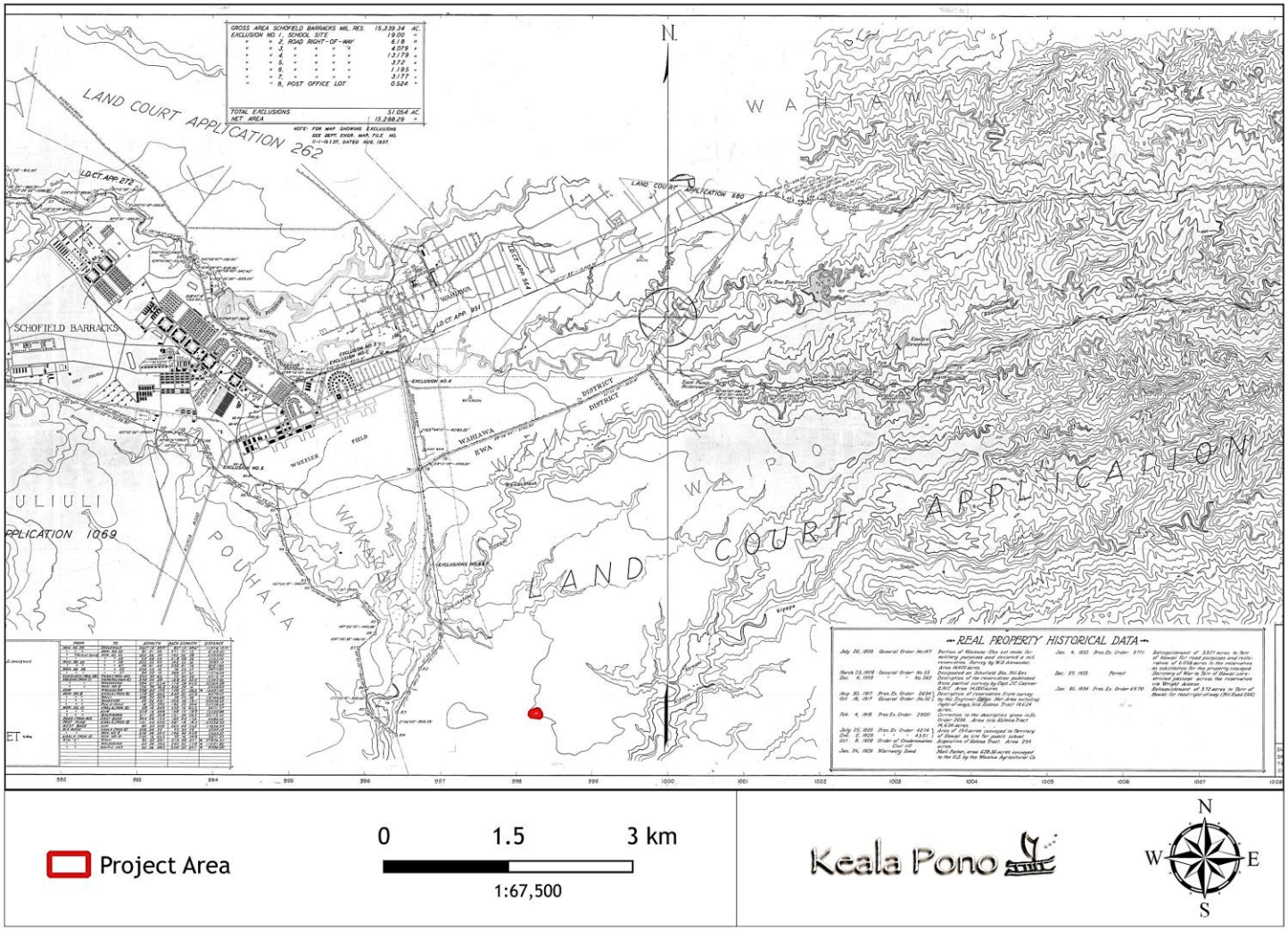

Figure 12. Map of Schofield Barracks Military Reservation and the surrounding area (Mahinske 1935).

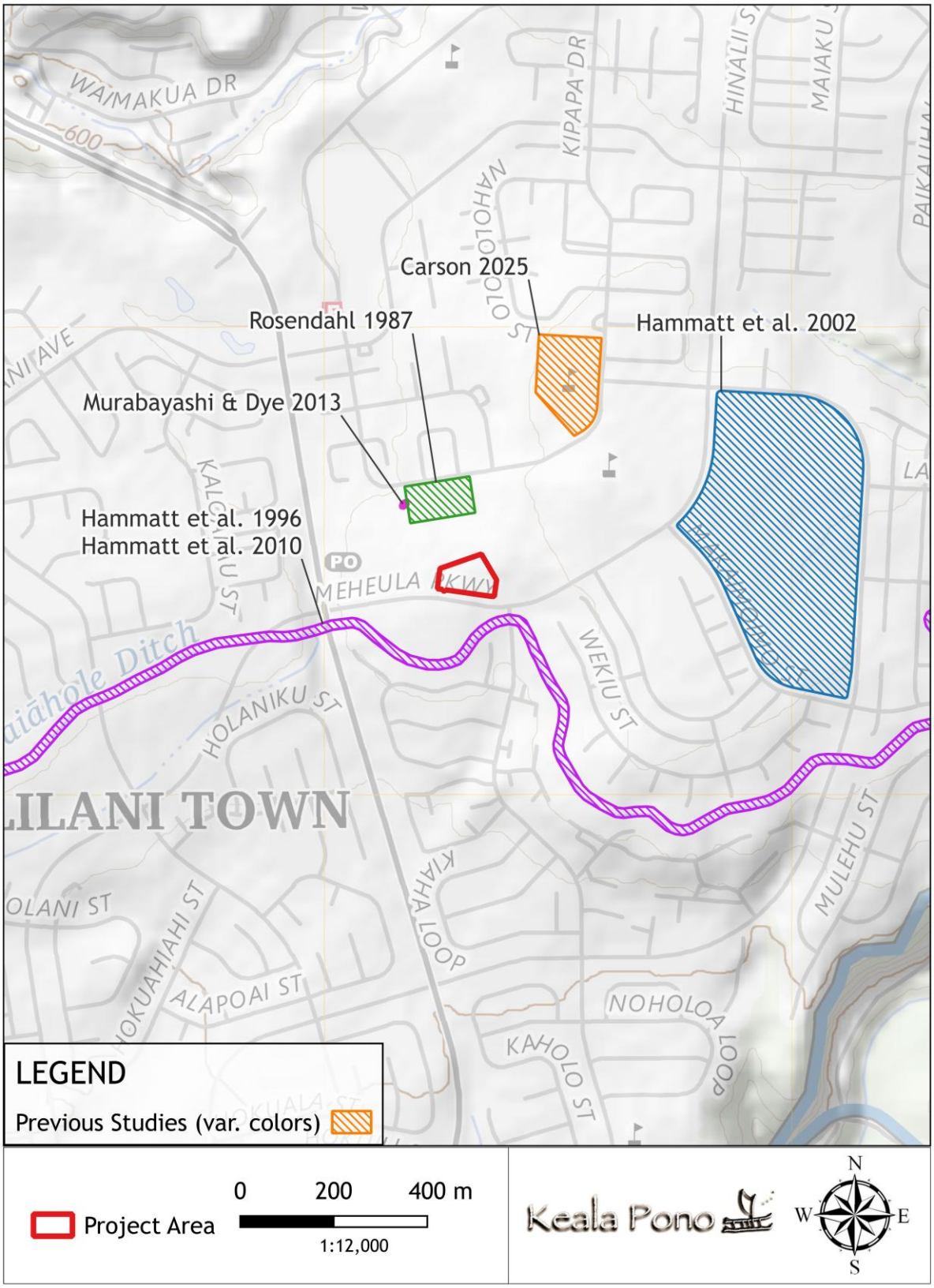

Figure 13. Previous archaeological and cultural studies located within 0.5 km of the project area.

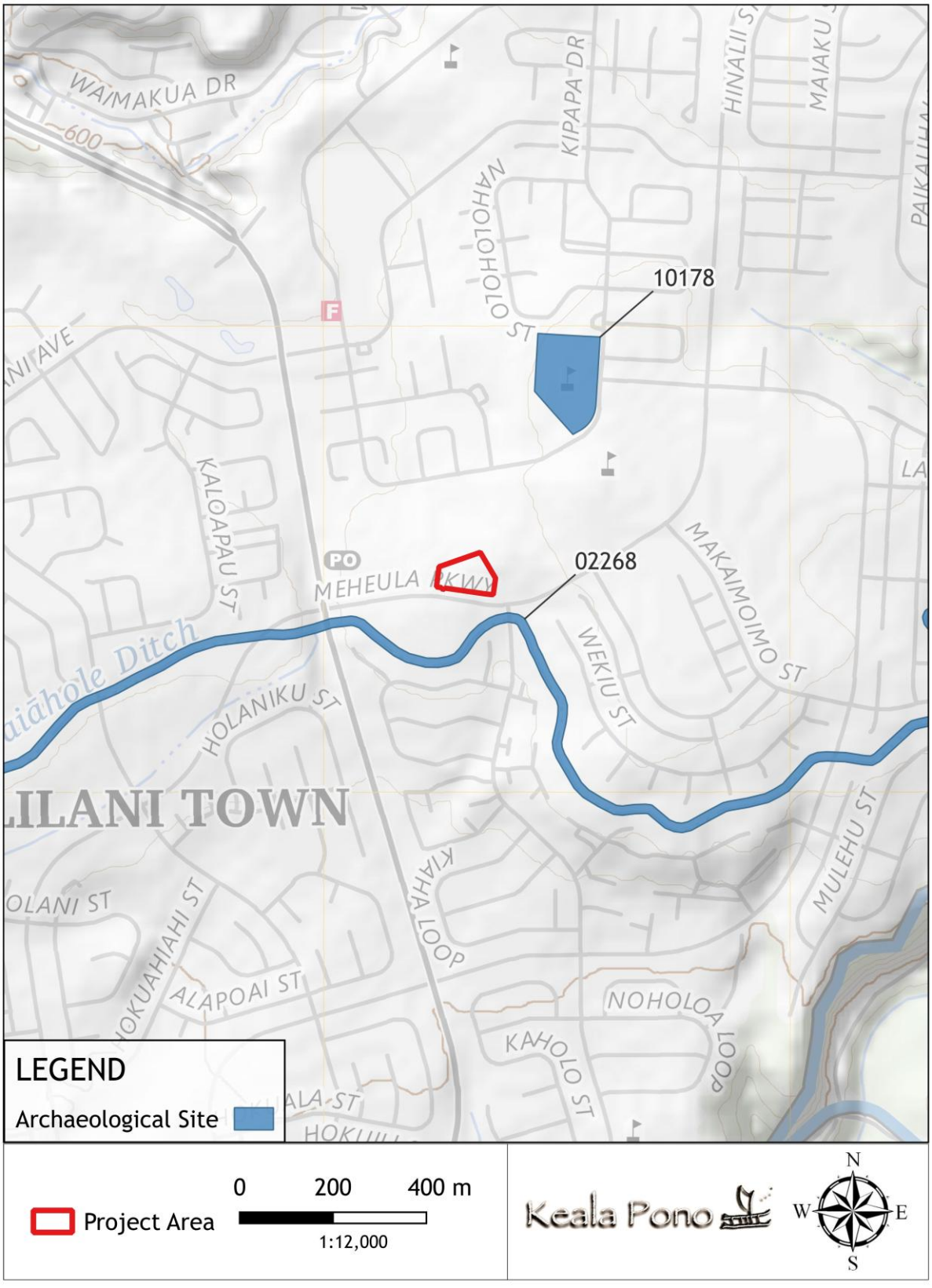

Figure 14. Known archaeological sites located within 0.5 km of the project area.

Table 1. Previous Archaeological Studies Near the Project Area

Summary: This data table contains chronological columns listing archaeological studies. The four column headers read from left to right: Author(s) and Date, Location, Study Type, and Findings. Each row represents a specific archaeological report, its geographic focus area, and the corresponding cultural or site discoveries.

Author(s) and Date	Location	Study	Findings
McAllister 1933	Island-wide	Survey	Did not identify any sites near the current project area.
Rosendahl 1987	Adjacent to 95-1200 Meheula Pkwy	Archaeological Reconnaissance	No historic properties were identified.
Hammatt et al. 1996	Castle and Cooke Lands Waipiʻo and Waiawa Ahupuaʻa (1,339 acres)	Archaeological Inventory Survey	Noted plantation-era disturbance; identified new portions of the previously recorded Waiāhole Ditch (SIHP 02268).
Hammatt et al. 2002	Mililani Community Transit Center at 95-1249 Meheula Pkwy	Archaeological and Cultural Impact Evaluation	Documented that the current Kamehameha Highway corridor follows the same path as a traditional trail first mapped by McAllister (1933) that connected ʻEwa and Waialua districts. No SIHP number was designated.
Hammatt et al. 2010	High-Capacity Transit Corridor Waiawa to Aloha Stadium	Archaeological Inventory Survey	SIHP 02268 (Waiāhole Ditch System) was further documented. Portions near Waipiʻo and east of Mililani High School remained physically intact.
Murabayashi & Dye 2013	Communications Facility Mililani High School	Historic Properties Assessment	No historic properties were identified.
Carson 2025	95-202 Kīpapa Dr. Mililani Waena Elementary School	Historic Property Evaluation	Documented Mililani Waena Elementary School (SIHP 10178).

Table 2. Archaeological Sites With Known Locations Within 0.5 km of the Project Area

Summary: This data table identifies archaeological resources by location. The three column headers read from left to right: State Inventory of Historic Places (SIHP) Number, Site Description, and Author(s) and Date. Each row details a single site, its formal designation code, and the corresponding report where it was documented.

SIHP 50-80-09-	Description	Author(s) and Date
02268	Waiāhole Ditch System	Hammatt et al. 1996; Hammatt et al. 2010
10178	Mililani Waena Elementary School	Carson 2025

In 1987 an archaeological reconnaissance survey was carried out on a 2.75-acre plot of land in Mililani Town, located to the west of Mililani High School (Rosendahl 1987). The survey found no archaeological resources, and no further archaeological research was recommended.

An archaeological inventory survey was conducted on 1,339 acres planned for residential development in the mauka regions of Waipiʻo and Waiawa Ahupuaʻa (Hammatt et al. 1996). No signs of prior settlement were found, which was largely attributed to the land having been extensively cultivated with pineapple during both historic and modern periods. However, a new section of the previously recorded Waiāhole Ditch System (SIHP 50-80-09-02268) was identified. The Waiāhole Ditch System, constructed by the Oahu Sugar Company between 1912 and 1916, is a historic 25-mile irrigation network on Oʻahu. Designed to channel water from streams and tunnels along the windward slopes of the Koʻolau Range, it delivers this resource to the arid leeward plains, enabling large-scale commercial agriculture. Upon identifying the remnants of the system, the report recommended implementing mitigative measures if this site were to be affected during development.

In 2010, the Waiāhole Ditch System (SIHP 02268) was re-studied during another archaeological inventory survey (Hammatt et al. 2010) with segments near Waipiʻo and east of Mililani High School documented as still intact. The features identified included portions of plantation-era rock and mortar segments of a channel, flume remnants, field boundaries, and earthen berms. However, all were determined to lack integrity and historical importance due to extensive prior disturbance.

In 2002, an archaeological and cultural impact evaluation was prepared for the proposed Mililani Community Transit Center, situated to the east of the current project area (Hammatt et al. 2002). The study determined that the present Kamehameha Highway corridor follows the alignment of a former traditional trail that once linked the ʻEwa and Waialua districts and was mapped by McAllister (1933). The conclusion of the study suggested another trail, referenced by John Papa ʻĪʻī, likely passed near the area. ʻĪʻī described the trail as follows:

> There the trail met with the one from Kolekole and continued on to the stream of Waikakalaua, Piliamoo, the plain of Punaluu to the rise, then down to Kipapa and to Kehualele. A trail ran from this main trail to Halakoa, Oahunui, and other places much visited, such as Kukaniloko. From there it extended to the digging place of Kahalo then went below to Paupalai, thence to Lelepua and to Kahalepoai where the legendary characters Kalelealuaka and Keinohoomanawanui lived. (ʻĪʻī 1959:99)

Kūkaniloko, renowned as the sacred birthing site of Hawaiian royalty, provides an important cultural landmark in understanding the region's traditional landscape. Given its location, the associated trail was most likely situated north (mauka) of both the Mililani Community Transit Center project area as well as the current study parcel. However, its precise alignment has been obscured by decades of pineapple cultivation and later urbanization. As a result of this long history of agricultural use followed by modern development, the study identified no cultural resources. It was concluded that construction of the proposed transit center would not adversely impact archaeological resources or cultural practices.

In 2013, a historic properties assessment was carried out for the proposed Verizon Wireless Mililani High School communications facility, located on the football field to the immediate northwest of the current project area (Murabayashi and Dye 2013). The assessment evaluated whether replacing an existing stadium light pole with an antenna monopole would result in direct or visual impacts on historic properties within the area. It was determined through a review of archaeological studies and historic maps that the project area had previously undergone significant alteration by commercial pineapple cultivation and later by Mililani High School construction. As a result, it was determined that subsurface features were unlikely to still be present in the area, and the facility's construction would not directly affect historic resources.

Most recently, a historic properties evaluation was conducted for Mililani Waena Elementary School to assess the significance and integrity of its campus buildings (Carson 2025). The school was first constructed in 1970 with an administration building (Building A) and classroom building (Building B), followed by the construction of the library (Building C) and a 16-classroom building (Building D) in 1972. The serving kitchen (Building E) was built in 1973 and the cafeteria (Building F) in 1983. The evaluation determined that the campus was eligible to be listed as a historic district because it is an example of Oʻahu school development during the postwar period (1950s–1970s). Buildings A–E were also determined to be representative examples of regionally designed public schools during the 1970s. As a result, Mililani Waena Elementary School was designated SIHP 50-80-09-10178.

Summary of Background Research

Through examination of traditional and historic land use for Waipiʻo and the greater ʻEwa District, as reflected in moʻolelo, historic literature, and archaeological investigations, it is clear that this was a land rich in both natural and cultural resources. The ʻEwa region was a major center of settlement and agriculture, with kalo, ʻuala, and other crops cultivated across its broad coastal plain and fertile valleys. Along the shoreline of Puʻuloa (Pearl Harbor), numerous fishponds provided mullet, akule, and a variety of shellfish, while the inland areas yielded ʻawa, wauke, mamaki, and olonā and offered foraging resources during times of drought and famine. The moʻolelo of Kanekuaʻana immortalizes this inland lifeline by detailing the construction of Waihau Heiau by the descendants of Kanekuaʻana and the offerings left in her honor in hopes of securing her blessings during times of fish scarcity. This abundance made ʻEwa, and particularly Waipiʻo Ahupuaʻa, both a stronghold of aliʻi and a hub of population and activity on Oʻahu. In later periods, land use in Waipiʻo and the wider ʻEwa region centered on plantation agriculture and ranching.

Waipiʻo was also a battleground in Oʻahu's history, with its plateau lands and gulches serving as the setting for repeated conflicts. Kīpapa Gulch, in particular, was the site of legendary battles between invading chiefs and Oʻahu leaders, remembered for the immense loss of life that gave the gulch its name. Waipiʻo also became a center of rebellion, earning the epithet Waipiʻo kīmopō, "Waipiʻo of secret rebellion."

In the late 18th and early 19th centuries, the ʻEwa uplands supplied ʻiliahi for global trade, but heavy harvesting and burning left the forests depleted and the land permanently altered. The introduction of cattle in 1793 further transformed the landscape, as herds multiplied and damaged gardens and settlements, and lead to the establishment of ranches such as Lihue Ranch by the mid-1800s. By the late 19th century, rice paddies spread across former loʻi kalo, while sugarcane and later pineapple dominated the agricultural economy, aided by the OR&L, which linked fields to the cannery and port in Honolulu. Schofield Barracks and Wheeler Army Airfield were also established in the region and the railroad later served military transport during World War II. By the mid-20th century, much of Waipiʻo was under pineapple and sugarcane, but shifting markets and postwar urbanization eventually gave rise to Mililani Town, replacing plantation agriculture with residential development.

Previous archaeological studies in the region have not identified any traditional sites within the immediate project vicinity. However, historic plantation-era flume remnants of the Waiāhole Ditch System (SIHP 02268) were recorded east of the current project area. In addition, the nearby Mililani Waena Elementary School campus (SIHP 10178), situated to the northeast, was recognized as a representative example of Oʻahu school development during the postwar era (1950s–1970s). The current project area is a built environment that has undergone extensive previous disturbance in historic and modern times. Thus, it is not likely that any surface archaeological features remain. Nevertheless, cultural materials, features, and/or deposits may be present in a subsurface context on the property.

ETHNOGRAPHIC SURVEY

Not all information can be found in the archives, in textbooks, or at the library. Rather, it is through the stories, knowledge and experiences of our kamaʻāina and kūpuna, that unwritten information is found. Through them we are able to better understand the past and plan for our future. With the goal to identify and understand the importance of, and potential impacts to, traditional Hawaiian and/or historic cultural resources and traditional cultural practices of the project area in Waipiʻo, ethnographic interviews were conducted with community members who are knowledgeable about the region.

Methods

This CIA was conducted between September and November 2025. Guiding documents for this work include The Hawaiʻi Environmental Council's Guidelines for Assessing Cultural Impacts (2012), A Bill for Environmental Impact Statements, and Act 50 (State of Hawaiʻi). Key personnel involved with this study include Windy McElroy, PhD, Principal Investigator of Keala Pono Archaeological Consulting, and Gina McGuire, PhD, Ethnographer.

Interviewees were selected because they met one or more of the following criteria: 1) was referred by Keala Pono Archaeological Consulting or the project proponent; 2) had/has ties to the project area or vicinity; 3) is knowledgeable about Hawaiian cultural resources of the area; 4) is a known Hawaiian cultural practitioner; or 5) was referred by other cultural resource professionals. Three individuals participated in the current study. Manaʻo and ʻike shared during these interviews are included in this report.

Interviews were conducted by phone or videoconference. The interviews were taped using a digital recorder. One interviewee requested to provide a written response to the questions. During the interviews, each participant was provided with a map or aerial photograph of the subject property, the Agreement to Participate (Appendix A), and Consent Form (Appendix B), and briefed on the purpose of the CIA. Research categories were addressed in the form of open questions which allowed the interviewee to answer in the manner that they are most comfortable. Follow-up questions were asked based on the interviewee's responses or to clarify what was said.

Transcription was completed by listening to recordings and typing what was said. A copy of the edited transcript was sent to each interviewee for review, along with the Transcript Release Form. The Transcript Release Form provided space for clarifications, corrections, additions, or deletions to the transcript, as well as an opportunity to address any objections to the release of the document (Appendix C). When the forms were returned, transcripts were corrected to reflect any changes made by the interviewee. The one written response is presented in Appendix E with no edits.

A total of 20 individuals were contacted, resulting in three interviews. Additional manaʻo was shared via a written statement from a lineal descendant of Mililani. The ethnographic analysis process consisted of examining each transcript and organizing information into research themes, or categories. Research topics include connections to the project lands, land use and archaeological sites, the natural environment and traditional cultural practices, moʻolelo, mele, and place names, changes over time, and concerns and recommendations for the proposed project. Edited transcripts of the interviews are presented in their entirety, in the order in which the interviews were conducted, in Appendices D through F. Additionally, a writen statement is included un-edited in Appendix G. A list of those who consented to be interviewed and those who assisted in the consultation process are presented in Table 3.

Table 3. List of Individuals/Organizations Contacted

Summary: This four-column data table tracks community outreach and cultural consultation efforts. The column headers read from left to right: Name, Affiliation, Method of Contact, and Result of Contact. Each horizontal row details a single individual or group contacted, their organization, how they were reached, and the final outcome of the outreach.

Name	Affiliation	Method of Contact	Result of Contact
Noelani DeVincent	Hawaiian Civic Club of Wahiawā, President	Email	No Response
Daniel-William Elisaga	Hula dancer, Mililani Middle and High graduate	Phone	No Response
Olan Leimomi Fisher	Kuaʻāina Ulu ʻAuamo, Raised in Mililani	Email	Interviewed via Phone
Pua Heimuli	Koʻolau Mountains Watershed Partnership	Email	No Response
Regina Hilo	SHPD, Burial Sites Specialist	Email	No Response
Giovanni Kaanehe	Lineal Descendant of Mililani	NA	Written Statement Submitted
Jo-Lin Lenchanko Kalimapau	Hawaiian Civic Club of Wahiawā, Historian, Mililani Resident, Lineal Descendant	Email	Written Response
Leialoha "Rocky" Kaluhiwa	Hawaiʻi State Aha Moku Advisory Committee, Moku o Kakuhihewa, Oʻahu	Email	No Response
Kelsie Kuniyoshi	Mililani High graduate, agricultural and cultural advocate	Email	Interviewed by Videoconference
Makalani Kūpua and Māhealani Traub	ʻApoākea Native Hawaiian Innovation Institute, Mililani	Email	No Response
Kēhaulani Kupihea	UH West Oʻahu, Mauliola Keʻehi Founder and Executive Director	Email	No Response
Mariko Lau	Mari's Gardens	Phone, Email	No Response
Andrea Leialoha Mākuanani	Office of Hawaiian Affairs, Compliance Advocate	Email	Recommended Knowledge Holders
John Ornellas	Mililani kamaʻāina, musician	Email	No Response
Maria Kaʻimipono Orr	Ethnographer, Kaʻimipono Consulting, Mililani Resident	Phone, Email	Declined
Elsie Ryder	Kumu Hula, Hālau Hula o Kukunaokalā	Phone	No Response
Kumu Mandi Scott	Kumu Hula, Na Maka o Puʻuwai Aloha Foundation President	Phone, Email	No Response
Kaʻāhiki Solis	SHPD, Cultural Historian	Email	No Response
Sharon Williams	Garden Club of Honolulu, President, Mililani garden advocate	Phone, Email	No Response
	Mililani Town Association	Email	No Response

Consultant Background

The following section presents background information for each consultant, in their own words. This includes information on the interviewee's ʻohana and where the interviewee was born and raised. The participants are Olan Leimomi Fisher, Jo-Lin Lenchanko Kalimapau, Kelsie Kuniyoshi, and Giovanni Kaanehe.

Olan Leimomi Fisher

Okay, my name is Olan Leimomi Sauchai Morgan, and I'm Fisher because I got married.

I was born and raised on Oʻahu. My parents lived and still live in Mililani, so that's where I like, I kind of spent half my time, but then I was also really raised a lot by my grandparents who lived in ʻAiea and then had a house in Pūpūkea on the North Shore. So now I currently live in my grandparents' former house in Pūpūkea.

My, so my mom is Native Hawaiian and Chinese. My dad is Caucasian, Swiss English from California. And so yeah, I was raised in a hapa way, half-half, kind of, in those cultures, I guess.

Yeah, but so, my Hawaiian side, my grandparents, my grandma is from Oʻahu, Honouliuli, where she was born in ʻEwa side. And then my papa was, like, lived in town, Pōhaku Street, like in Kalihi. And we trace our family lineage, the furthest back that I was able to go, my grandma's side was Hāna, Maui and the furthest back on my papa's side was Kōloa, Kauaʻi.

Jo-Lin Lenchanko Kalimapau

Jo-Lin Lenchanko Kalimapau. Born May 31,1950 in Waikīkī. When I was 9 in 1959, we moved to Waipiʻo Acres, Wahiawā. It was the year the Hawaiʻi became the 50th State. Attended Kipapa Elementary School (there were three or four teachers' cottages on campus), Wahiawa Intermediate School and graduated from Leilehua High School in 1968. Leeward College for three semesters.

My mom is from Waipiʻo Valley, Moku o Keawe. She was part Hawaiian and part Mongolian. My dad was Ukrainian, Portuguese, Puerto Rican. There were six siblings. Both parents have ua hala. All siblings are still here in Hawaiʻi with their families. Two siblings still have homes in Waipiʻo Acres.

Kelsie Kuniyoshi

So I was born and raised in Mililani Mauka, which is considered like the richer side, I guess you could say, but I wouldn't say that my parents were really rich. We were more middle class… Yeah, but now I live in Pālolo, just to be closer to UH, because I'm going to be there for a while. But the majority of my compulsory education, like I mentioned, was in Mililani. So I went to Hanalani Preschool which is like a private Christian preschool. And then I attended Mililani Mauka Elementary, and then Mililani Middle. and then Mililani High School. And then for all of my higher education, I chose to attend UH Mānoa.

So my mom's side is actually from Kailua. But before that, they were from Līhuʻe in Kauaʻi. And then my dad is from Mānana, I guess you could say Palisades area, but also Waipahu, actually, both of which— my parents met at UH, and they moved to Mililani after they got married. In terms of my moʻokūʻauhau, it's a little bit unclear because my tūtū was adopted. So I don't really know much about my familial history. I did get a DNA test, but it doesn't tell me anything about myself. But as far as I know, I'm, I think, fifth generation from immigrants on both sides. But I was born and raised in Oʻahu my whole life.

Giovanni Kaanehe

> Here I will speak on the importance of the areas around the current Mililani Highschool Teacher Workforce Housing Project. I will summarize the history and continued existence of native plants, canoe plants, cultural sites, place names, wind names, and wars in the Waipio Uka area that encompasses the project. And finally, I will mention historical accounts and documentation that may be of interest for the specific proposed construction area.
>
> My name is Giovanni Kaanehe. Both sides of my family have lived in Mililani for three generations. Prior to my family living in the ahupuaa of Waipio on Oahu, my ancestors lived in the ahupuaa of Waipio on Hawaii island, farming kalo throughout the 1800s. I am of Hawaiian descent and can trace my lineage back to Haloanakalaukapalili... You may contact me for any future Cultural Impact Assessment interviews or comments on the ahupuaa of Waipio and ili aina of Mililani.

Topical Breakouts

The following sections are extended direct quotations from the interviews, organized by topic. Interviewees provided information on connections to the project lands; land use and archaeological sites; the natural environment and traditional cultural practices; mo‘olelo, mele, and place names; and changes over time. They also shared their concerns and recommendations for the proposed Mililani High School Teacher Workforce Housing Project.

Connections to the Project Lands

> So the project site takes place at my alma mater. And then I was a student there from 2015 to 2019. And although I never took ag as a high schooler, I always admired my friends who did. And I wish I was involved in it. But honestly, I mean, this is something that I brought up to my advisors and stuff, too, when I was older. But I didn’t know what the term NREM was or really what ag was when I was younger, because it was just something that you did, and I didn’t know you could get paid for it. And it wasn’t until I was actually graduated from my college that NREM was a field, and conservation and resource management was separate. But I did also teach part of my unit, because I was a master’s of education in curriculum studies for the STEM squared program. And we were required to teach a unit. And since I didn’t have— I’m not a formal educator— I’m an informal educator. Since I didn’t have a classroom, I contacted Bonnie Parker and Mrs. Kuwahara, Jennifer Kuwahara, from the high school if I could teach my unit on kalo, or more specifically, Hāloanakalaukapalili, who is kalo to their ag classes, and they said yes. And I’ve done a lot of workdays, too, with them with Hui Mālama, I think it’s called. And I still try to actively be involved with them, but I did teach my unit there as part of my completion of my graduate program. [Kelsie Kuniyoshi]
>
> I’m 36 now. And growing up, it’s kind of in my thesis, too. And the reason why I did my thesis about Mililani is that I definitely could tell the difference between, you know, spending a lot of time in ‘Aiea, where my grandparents’ house was, and then coming home to where my parents’ house was. And just like that sense of place, you know, it felt like, it felt artificial, kind of, I guess, in Mililani, growing up. And I just didn’t, I guess to be perfectly honest I didn’t like it. I really, I really would always gravitate, I was always more with my grandparents. You know, I even say that I’m, a lot of times, I’ll say I’m from ‘Aiea as opposed to from Mililani. And it just felt fake and not like it was actually part of Hawai‘i. Placed upon that ‘āina. But I will say, like, having a little more perspective, being older now, I have really come to appreciate it for the good that it does have too. Like the safety things, like sidewalks, like, you know, street lights. And it does, I mean, even if it’s just a facade, it overall does feel like a safe, kind of friendly community, you know? [Olan Leimomi Fisher]

I presently live with my first born son in Mililani. The subject property, Mililani High School, is across the street from us...Our ʻĀina Lenchanko lived in this area from 1959 before Mililani was developed in 1968. This area was our backyard and we rode our bikes and explored this ʻāina daily long before any development began. It was already acres and acres of pineapple fields. [Jo-Lin Lenchanko Kalimapau]

It's easy, like easier, to walk around than a lot of other places with no sidewalks and stuff like that, infrastructure like that. But yeah, I just, I was always missing that sense of place and I didn't really feel a lot of pride when I would talk about Mililani or like, people would be like, "Oh, well, what is that place known for?" You know, or "What's special about that place?" And the most I could say is like, we have rec centers with pools and like, the town center. You know? Which is like, and again, not to, I mean those are really great things, too, to have in the community. I mean, it's not like, I think it was part of my naivety. Like being naive of like, you know, now I appreciate it a lot more than I did when I was younger. Yeah, that was kind of my relationship with it for a really long time. And then what led me to focus my master's thesis in Hawaiian Studies about, like the history of that ʻāina before it became, before it even became called Mililani, this master planned community that it is today. [Olan Leimomi Fisher]

Land Use and Archaeological Sites

There's definitely iwi, because the Battle of Kīpapa was, sounded pretty intense. So if everybody, or like what that moʻolelo says is, like, the bodies are like lining the ditch. There's probably bones all over, so I'm not surprised. And I know even on old maps, you can see that there are labeled tombs on the golf course and stuff, because that's where Loko ʻEo was from people from the ʻĪʻī family. And there's definitely, well, I was wrong about, I called it Keahumoa Heiau, by the way, it's Moaʻula, I'm sorry. I knew it was a chicken thing. Yeah. I think, yeah, that's the main one I can think of is like the Battle of Kīpapa with the bones lining the gulch and downwards. Because even by Nob Hill, that's what is mentioned. That's what we call it, Nob Hill. But that's mentioned in the story too, and that's pretty close to the high school. So that area would probably have bones too. And then wherever people from the ʻĪʻī family chose to bury. [Kelsie Kuniyoshi]

Now that we know how Punalu'u got its name, let's talk about what used to be there. Considering the Punalu'u plains that the project area exists on were kula lands, there would've been soil terraces and mounds likely containing uala, but it really depends on the time period in question. To illustrate this better, a missionary speaks about his memories of the changes in the Punalu'u plain in the 1830s: Our family made repeated trips to the home of Rev. John S. Emerson at Waialua during those years. There was then no road save a foot path across the generally smooth upland. We forded the streams. Beyond Kīpapa Gulch the upland was dotted with occasional groves of Koa trees. On the high plains the ti plant abounded, often so high as to intercept the view. No cattle then existed to destroy its succulent foliage. According to the statements of the natives, a forest formerly covered the whole of the then nearly naked plains. It was burned off by the natives in search of sandalwood, which they detected by its odor burning. (Sterling and Summers 1978:89) [Giovanni Kaanehe]

It's [Kūkaniloko] not that far, though. I mean, even like Waikakalāua, the valley over, like Mililani Tech Park is close, like with the Oahualua stone. [Olan Leimomi Fisher]

Over the past 30 years the Hawaiian Civic Club of Wahiawā has participated in many site visits within the Wahiawa-Halemano, and Mililani lands through Escorted Access visits with Cultural Resources Military personnel. I do not know of any traditional sites in the area in discussion. [Jo-Lin Lenchanko Kalimapau]

Yeah, so Mililani is in Waipiʻo, which from, like, the land claim awards, I mean, there could be more, but I think there are like about like 100 to 200, maybe awards of that, of loʻi or even just kula lands in general. And from my understanding, the Māhele land claim

award process was pretty rigorous. You had to have, like, witnesses and everything. So 100 to 200 loʻi is pretty extensive. And it was originally like 35,000 acres of ag land. And they were kula lands because, well, further down, there were fishponds and stuff. But where Mililani is, is kind of landmarked. So in that sense, those are mostly kula lands, like dry land. And you'd find maiʻa, kō, ʻuala, dryland, kalo, stuff like that. But I have seen old pictures where you can see koa trees and kukui trees, and ʻiliahi, and stuff like that, all of which can be used for medicine, and construction, and highly valued stuff. So it was a pretty prosperous time, especially when Maʻilikūkahi was in reign. [Kelsie Kuniyoshi]

To continue on with the two companion heiau in Kipapa Gulch, as mentioned by McAllister in 1933 (Site 130&131). These structures are right off the main apex of the path through Kipapa Gulch on Army land, although they have not been maintained since the time of John Papa Ii. Their names are Moa'ula and Heiau o Umi, whose remnants can still be seen. Skye Kolealani Razon-Olds writes this about Kipapa "The remaining fugitives were hunted down and slain throughout the ʻEwa Moku. Afterward, the corpses were taken to multiple Heiau within the valley and offered to the gods. There is even a moolelo about the bodies disappearing after lightning struck the Heiau. They called it the tongue of god." Suggesting Kīpapa's heiaus were Luakini, involving human sacrifice. I've seen the exact same story written for the Moa'ula heiau on Big Island in More Hawaiian Folk Tales by Thomas G Thrum on page 274. [Giovanni Kaanehe]

Heiau a ʻUmi which, it's supposedly in the Kīpapa Gulch. And we went searching for it. But there's just so much California grass. We didn't ever find anything. But yeah, if you check out that map, it's basically kind of some of the significant sites that I was able to find anyway. With the Oʻahu, Oʻahu Nui Stone, and Waikakalaua Stream, and then Heiau a ʻUmi. Um... And yeah, then, I mean, Kīpapa Gulch in itself, you could say, is a significant site too. Um, with the different, there's like two significant battles that took place there. And yeah, I mean, if you're going, just looking at the whole of ahupuaʻa the more makai area is where John Papa ʻĪʻī's home was... [Olan Leimomi Fisher]

More cultural sites such as terrace walls, petroglyphs, rock shelters, ancient trails, maika fields, and housing platforms, are documented around the area in John Papa Ii's Trails of Leeward Oahu. Pictures of these can be seen in Skye Kolealani Razon-Olds blog on Kipapa. [Giovanni Kaanehe]

And then there's two heiau that are not really functional, because that's where the Ted Makalena Golf Course is, which is Heiau o Umi and Keahumoa. But they're, like, companion structures, but like I said, they're not really functional. Because that's where the... and I don't know of anybody that's stewarding them. I don't think anybody's going to give up the golf course. But also in that area is Loko ʻEo, which was the former fishpond. Because Waipiʻo is in a broader region of Puʻuloa that is very concentrated with lots of fishponds. [Kelsie Kuniyoshi]

The Natural Environment and Traditional Cultural Practices

[In response to cultural practices in the project area] Yeah, not that I know of. I mean, and it's been developed for so long at this point. Yeah, not that I know of... I mean I haven't heard of anyone, like, practicing recently. I know some people go into the gulch and... hike and things like that, but there's not really— I mean, the last time I was in there, too, was... there's not a lot of, like, native plants that I saw, that I've seen. But, yeah. I hate to say that because it's all… you don't want to, like... preclude that from happening in the future, you know? [Olan Leimomi Fisher]

[In response to "Are you aware of any traditional gathering practices at the project area and/or within the surrounding areas both past and ongoing?"] No. [Jo-Lin Lenchanko Kalimapau]

But it's just like, it's not like necessarily Hawaiian crops, but they do have like ʻulu and coconuts at the high school and a kalo library, but not all of it is, you know, traditional. [Kelsie Kuniyoshi]

Notable native plants that lived in the area are Koa and Ohia Lehua as notated in 1800s maps of the Waipio Ahupuaa. Many species of Ohia such as Lehua, Ha, Ahihi, Mamo etc. are still found along the border of Mililani and Waikakalaua. Mamaki was also a very notable native in Waipio. "From Waipi'o in Ewa and from some lands of Hawaii came tapas made of Mamaki bark and ʻouholowai tapas from Olaa and soforth..." (Sites of Oahu, John Ii) Lastly, ʻiliahi (Hawaiian Sandalwood) was previously present in the area until the trade ravaged its population (Sterling and Summers 1978:89) [Giovanni Kaanehe]

I think that's… besides other stories related to training, training of warriors close by to that area, like, in the Līhuʻe more kind of Schofield, too. And Kūkaniloko, but it's like kind of how, how far is too far? [Olan Leimomi Fisher]

They already had, they already have a lot of stuff growing there. And holistically, my unit was only, for the purposes of the program, our units are only two weeks... I mean, no, it was fun. I'm very grateful. And if they didn't have a place on campus, right next to the classroom, in my opinion, my unit would not have been anywhere as effective... Because I just took them out. You know what I mean? I'm like, this is the kalo. This is its, look at this one. It's different. You can see the colors and the shapes. And I started their, like, journals for them. [Kelsie Kuniyoshi]

And yeah, the garden was, is, has been a nice thing to see. And I know the Mililani High School has, like, their Mālama Mililani or something group. Yeah, I think Kumu Kekoa Wong is a part of that. And he will definitely have more to say for sure. ʻCause I know that they do like, I think they do like imus and they, I think they're, I even heard of them, some of them trying to steward some certain areas around the, around Mililani. [Olan Leimomi Fisher]

Well, so it's pretty interesting because they have a section of it that is, we have a partnership with the Waiʻanae Mountain Watershed Project. So there's a section of it that's a shade house. And that's like a little nursery where they grow all kinds of native stuff which is really awesome because, and then they get to go on the field trips and then outplant it sometimes. But they have, have sugar cane. I know the ag students, when they take that pathway, they get plots of land. And you can grow whatever you want. A lot of them choose to grow ornamentals, like sunflowers and stuff like that. But I know for a fact that they have two coconut trees, and then they have kukui all lining the back, which they used when they have their imu at the end. They use kukui to cook. They have kalo, like, kind of in the back, lining the side. They have squash. They have lots of good food stuff there, actually. [Kelsie Kuniyoshi]

The people of Waipio had specific cultivar varieties tailored to the area. A rare variety of ancient Hawaiian maia (banana) previously mentioned by Kamakau in the 1800s was discovered by K.E.Y. Hosaka in 1932 in Kīpapa Gulch bordering Mililani. The variety was called Iholena Loha, and it was the last time the variety was ever seen. Maia were typically grown along the banks of lo'i, which are still abundant in Kipapa Gulch. The kalo that was growing in the lo'i was most likely the Kāī family of kalo (kāī kea, kāī ʻala, kāī uliuli), which were famous in the Ewa moku for their attractive ʻala or fragrance. There is also an ʻili ʻāina called Kahauone in Waipi'o Uka whose ʻawa clumps were favored by Kakuhihewa. Unfortunately, I have yet to identify what ʻawa variety it is. [Giovanni Kaanehe]

They do [do an imu every year]. I usually get invited to it, and it's pretty awesome to see the students do that kind of stuff. And they always have something innovative going on, like they have a robotic planting thing now, which is pretty cool. And I think some of the stuff that they grow, because Mililani is one of the schools that does farm-to-school

initiatives or farm-to-table, I think that some of the stuff that they grow on there gets put into the lunches. [Kelsie Kuniyoshi]

Although not explicitly stated for the heiau in Waipio, Oahu, but for the heiau in Waipio, Hawaii island, which carries the same name “Moa’ula”, two important canoe plants are mentioned. Niu Hiwa is believed to grow around the heiau as with all Luakini heiau. A variety of red ‘ape (‘ape ula) was also used as hookupu by Kamehameha the Great for the heiau. It is possible that the heiau between these two ahupuaa mirror each other and must be further researched. [Giovanni Kaanehe]

Moʻolelo, Mele, Place Names

Many battles were fought on the Central Plains of Oʻahu. Moʻolelo, mele, oli and place names have survived. I am not familiar with any of them in this area at this time. [Jo-Lin Lenchanko Kalimapau]

I just saw the map, like 10 minutes ago, but not specifically in that area, that I really know of. I mean, a lot of it is in my thesis. I think I talked about, like, how a Hawaiian elder was brought in to give the street names of Mililani, when it was first being created. And a lot of them are, like, star names and constellations and, like, that we think correlates to, like, what we’ve seen in certain places. But... And then a little further down from the site area, it’s in my thesis too, is what I’ve heard was, like, an entrance point to, like, the Kīpapa Gulch. [Olan Leimomi Fisher]

No, it’s actually, it’s like a street away or kind of a, it’s kind of far actually, from it. I mean, I guess, just it’s all relative, but you can kind of see the geography level though, but yeah, it’s kind of actually like me and my parents’ house where there’s like a valley, or not a valley, but like a little kind of ravine. That’s kind of like the start of the Kīpapa Gulch. And then I was told by Aunty Elsie Ryder, actually, that that was like the point where a lot of the soldiers entered through the gulch. And then there was a big battle that happened in that gulch, which gave it partially the name Kīpapa... If you’re going up Lanikuhana Avenue, um, and then it’s like, you can actually see it pretty well on Google if you’re, you take a right from Kamehameha, and then you’re going up and then you’ll see, like, kind of a little ravine, like, there’s trees lining it to the right, kind of directly across Nob Hill. [Olan Leimomi Fisher]

Punalu’u - The ili aina that we know today as Mililani, was originally named after the ali’i that died on this plain in the battle of Kīpapa. It was later renamed to Mililani by Castle&Cooke. It is believed that John Papa I’i coined the name Mililani for the area, although I’ve seen in his writings that he uses the old name “Punalu’u.” John Papa I’i taught at the same school and became friends with Amos Star Cooke and his wife, who later bought John Papa I’i’s land and founded Castle&Cooke. [Giovanni Kaanehe]

Place names that immediately come to mind are Waiāhole Ditch, Oʻahu Nui, Kūkaniloko. A lot of people don’t realize that Kūkaniloko isn’t just like a small spot in Wahiawā. It’s pretty big. And in central Oʻahu, it encompasses the entire Mililani region, from what I understand, according to Uncle Tom Lenchanko. And arguably, Kūkaniloko is one of the most important spots on Oʻahu, because that’s where chiefs are born. Even Kamehameha attempted to bring his wife here. But I don’t know, it didn’t work out or something. [Kelsie Kuniyoshi]

Well, there’s the Waipiʻo song that was, it’s in the thesis too. Written by, um, Mekia Kealakai, or Irene ʻĪʻī, the daughter of John Papa ʻIʻī. Um, and it’s specifically about Waipiʻo Oʻahu. ʻCause there’s a lot of, like, there’s a lot more stuff about Waipiʻo on the Big Island, yeah, but yeah, I know that that song, was, like, a really special… and it talks about Kahalelaukoa, which was, like, what they called her. And that family, anytime it was played at any party, would stand up, and they would all, like, be very proud that that song

was for them, for their land. And it talks about the Laulani breeze. The Laulani, Laulani is the wind of that area. [Olan Leimomi Fisher]

Kea'akukui Gulch - Translating to "the Kukui rootlet" this is an old name that specifies the gulch that is above the Kipapa Junction but below the Waikakalaua and Kawaieli junction boarding Mililani. Most maps just label these two gulches as Waikakalaua. Waikakalaua - Translating to "water rough in the rain" this gulch starts at the Kawaieli junction and continues all the way up to the Waipio ahupuaa marker "Puu Kaaumakua." This gulch is most notably spoken of in the Oahunui story and the Kīpapa Gulch wars. [Giovanni Kaanehe]

But other place names are like Kīpapa. That's a really pretty, probably the most famous moʻolelo that took place in Mililani. There were two battles of Kīpapa. Sometimes it gets conflated as one, but it's two. And the bigger one of the story is between Big Island, Maui chiefs. There's a couple of them that teamed up together and kind of tried to ransack, I guess you could say, or surprise Maʻilikūkahi. But Maʻilikūkahi, an Oʻahu chief, he was able to cut off and successfully defend it at Kīpapa. And it's not just the stream, but it's kind of more by Kīpapa Drive and the elementary school, too. So it got that name because, from what I understand, the warriors' bodies paved the way of the gulch, so it means "placed prone." [Kelsie Kuniyoshi]

Maʻilikūkahi was known for being really connected to this area on Oʻahu. And he was actually born at Kūkaniloko... And then, yeah, there's old newspaper articles talking about him. And yeah. The warriors that were trained, like, during his time in that area. And yeah, if you actually go to Page 48 in my thesis, too, there's a map that I did overlaying kind of— so, like, Punaluʻu Plains is, like, what a lot of Mililani was built on... [Olan Leimomi Fisher]

But something else about place names that's pretty interesting in Mililani is that all of the streets are named after navigational terms or star terms. But I haven't really found too much or learned too much about the significance of navigation in Mililani. And I assume that it has to do with maybe our heiau not being functional since heiau are places to observe time. But yeah, certainly, they got those names for a reason. And in the development of the town, I'm sure they consulted somebody that was Hawaiian and knew these names. But the place I grew up on was Alenale, which means "clear." [Kelsie Kuniyoshi]

Kīpapa Gulch - Kīpapa has three translations. Mary Kawena Pukui writes that it meant "to place prone" or also "to pave." Referring to the dead bodies after the war. If you farm kalo, you know that kīpapa also refers to a style of retaining wall used to prevent erosion in your lo'i. All these definitions could be right as the bodies were probably placed prone, paving the gulch, and stacked like rock walls. [Giovanni Kaanehe]

And like, then you can even like, just I mean, and then it kind of goes to his other home in town, like, near Iolani Palace that was named Mililani. And you could say that Mililani Town is kind of, like, named after him and his family, and that home that they had there. And there's also that Mililani Street now. It's the street in town that is commemorating, like, their home that once stood there. [Olan Leimomi Fisher]

Laulani - as heard in the Waipi'o song by Mekia Kealakai Kanoenoe - as written in the Star Bulletin announcing the Mililani Mauka community breaking ground. The article states the intended meaning of the names Castle&Cooke gave throughout Mililani, such as I'i vistas, Kanoenoe, Kumelewai court, etc. Kanoenoe is noted as the wind name of the area. [Giovanni Kaanehe]

But what makes this place unique and special? And it's the history, it's the places and even just the name of Waipiʻo is so beautiful, you know, like, the curved water referencing all the rainbows that you can see in this area. And rainbows being, like, a physical manifestation of god and akua and your kūpuna. And then mililani, like, the name, meaning to look up and to be grateful and to praise the heavens and the gods. So it's, like, some of

it's there and at least it's me, at least I really do like the street names. There's some, you know, like there's ʻĪʻī Vistas in Mililani Mauka. Like some certain areas. But yeah, I don't know. And isn't it a cool opportunity ʻcause there hasn't really been a bigger thing like this in the town area for a while. [Olan Leimomi Fisher]

Two wars are recorded as taking place in the areas of Waipio, specifically Punaluu, Waikakalaua, and Kipapa. Here are the direct sources: Kahikulani was a war leader of Puna, Hawaii. He came to battle against the chief Halemano whose cannibal meat dish became famous. He went inland and up to the very top of the mountain. He looked down on Kipapa stream where his warriors fought those of chief Halemano in a great battle. The sun had not set when all of Halemano's warriors were destroyed. The land and stream of Kipapa was reddened with the blood shed in this battle. That was the first time that the public highway became peaceful in that period that is gone. Kakikulani was a man of power in Puna, Hawaii. (Sterling and Summers 1978:20) [Giovanni Kaanehe]

I have before referred to the expedition by some Hawaii chiefs, Hilo-a-Lakapu, Hilo- a-Hilo-Kapuhi, and Punaluu, joined by Luakoa of Maui, which invaded Oahu during the reign of Mailikukahi. It cannot be considered as a war between the two islands, but rather as a raid by some restless and turbulent Hawaii chiefs.... The invading force landed at first at Waikiki, but for reasons not stated in the legend, altered their mind, and proceeded up the Ewa lagoon and marched inland. At Waikakalaua they met Mailikukahi with his forces, and a sanguinary battle ensued. The fight continued from there to the Kīpapa gulch. The invaders were thoroughly defeated, and the gulch is said to have been literally paved with the corpses of the slain, and received its name "Kīpapa," from this circumstance. Punaluu was slain on the plain which bears his name, the fugitives were pursued as far as Waimano, and the head of Hilo was cut off and carried in triumph to Honouliuli, and stuck up at a place still called Poo-Hilo. (Fornander 1996:89–90) [Giovanni Kaanehe]

Change Through Time

I think it was all just native forest before. Yeah, nāhelehele. But then came pineapple, which, I mean, and sugar, which like wiped all that out before. [Olan Leimomi Fisher]

And then I also tried to start a community garden in Mililani, but the Town Association said it's banned in the governing laws of Mililani. So therefore, there's just so many hurdles. There's very reduced ag land as is, and it's constantly under threat. Um, like we have Mililani Ag Park, but that's like where they do like solar stuff too. And it's like gated and all that. And then they have, some of it was up for lease too when they wanted to build an emergency campus. So, but anyways, yeah, more of the contemporary stuff takes place within schools, like the middle school has a pretty extensive area too, but I wouldn't say all of it is traditional. You know, like they grow stuff like, not that lettuce isn't valuable. [Kelsie Kuniyoshi]

The land here was primarily pineapple lands. All physical sites were already destroyed. We lived in Waipiʻo Valley and watched the development of Mililani Town. The only way to Honolulu or to Wahiawā was through a two lane Kamehameha Highway. The development of the H-2 Freeway took out more of our remaining traditional sites. H-2 Freeway was opened in October 1974. [Jo-Lin Lenchanko Kalimapau]

Yeah. Well, I think the high school, like— I know I'm not the only one who feels this way, but I feel like it looks like a jail now because they have, like, a fence wrapping around the, like the entire thing. And I don't know if that's because kids were ditching class too much or something, but I just feel like it looks really intimidating and not really welcoming. Yeah, but I have noticed more houses, people in Mililani now, which is interesting. Not that that's bad or anything, it's just, it's just interesting. And there's definitely been, like, a lot of the shops and stuff that we see have definitely, like some of the smaller mom and pop shops, like I know Sanrio just went out of business, or no, not Sanrio, Morning Glory just went out of business, which is definitely a favorite store for me and my friends when

we were younger, but they're getting kind of out-competed by other bigger businesses. [Kelsie Kuniyoshi]

I think, like, more just generally, which my thesis kind of focuses on is, like, John Papa ʻĪʻī and how, you know, he was awarded the whole ahupuaʻa of Wahiawā in the Māhele. And then there's, like, some more maps. But a lot of the kuleana that we found, or that I found in my in my thesis, I think was more along the river, like in the gulch. [Olan Leimomi Fisher]

Yeah, it's really, I mean, at the end of the day, it's like a planned community, you know, and like a lot of people or a lot of my classmates think that Mililani is an ahupuaʻa. They don't know. It's just like, I don't think they really teach about the development. That's why, or at least when I was in school, from the public school system, I don't recall them teaching about the history of Mililani. Like we did learn what ahupuaʻa were, but not in the context of our own ahupuaʻa. Like the students there wouldn't know what ahupuaʻa they live in, unfortunately. And to be fair, a lot of the resources that would be traditionally accessed, like all the kai resources are in Pearl Harbor, so it's not really readily accessed. And when they go on field trips, like I've gone on field trips with them too as an adult, and they'll go all the way to Keʻehi, or all the way to Kahana, you know? There's nothing for the students to access that's within their own, even moku, basically, which is kind of sad to me. [Kelsie Kuniyoshi]

Because it was, yeah, because they had the water there. Where a lot of what the development is on is like more the plains area. Yeah, but yeah, there's actually a map in my thesis on Page 113 was showing some of the original Land Commission awardees in Waipiʻo Uka, right in Mililani... I think it's kind of a little bit more mauka, though, than the project site. It was more like a mauka area. [Olan Leimomi Fisher]

And even up mauka, there was the fires recently, so I think there's more restricted access, but they have military training up there. And there's an area that me and my friends and sometimes my classmates would go to, which I don't know what the real name of it is. It might be wait, [inaudible name] or something? It's a creek. But that's what we call it. It's like in some residential area, just behind some houses. But they do military training there and you can definitely, like we've gone there to swim and catch fish and stuff, but you can definitely hear them shooting their guns. [Kelsie Kuniyoshi]

I mean, even in just my lifetime, well, one small change that I think I guess that is good, I guess, is in my thesis, I have, I kind of studied a little. Like, there used to be this, kind of pavilion in the center of the town center. And it had all these, like, plaques on it that were done by the elementary school students. And they were, like, had all kinds of, like, mistakes and misinformation, an inaccurate description of the battles and stuff that happened there. And, yeah, there's pictures. It's all in the first chapter, but... And then it also has, like, they had Miliani High School students and Hanalani students dream up, like, visions of the future. Like, it's really, it was pretty, like, terrifying, honestly... Yeah, they were, like, just buildings. Like it was, it's like in the Pages 26 to 28, has pictures of what these plaques looked like. And this was from 11 years ago even, you know what I mean? I'm sure, I don't even know what it would look like now, but I think it'd be not the same, I don't know. And then the Hanalani student plaque was, the vision of the future was like, was a huge pineapple at the center. Like, that's the furthest back that Hawaiian culture or Hawaiʻi, the meaning and origins go with pineapples, you know? Yeah. So, I'm glad that that was taken down... Yeah, I mean, I'm glad that it was taken down, but then what they replaced it with is just like, I would say maybe, I don't know, not worse, but, even more, like, ambiguous and just kind of, like, not— it doesn't even have any kind of anything, no history now, nothing. It's just, like, these, this fake grass turf in the middle of the town center and water features. [Olan Leimomi Fisher]

And most of it, I think, belonged to the ʻĪʻī family, from Ioane Papa ʻĪʻī, most of that area. And then Castle and Cook acquired it. And it was sold to Hawaiian Pineapple. And that

was like the more, what Mililani is contemporarily known for is pineapple farming. But it was a really small portion of the history here, actually. And yeah, now it's mostly residential. But there is other contemporary things that's in the area is like albizia, which the Albizia Project, it's invasive. But the Albizia Project does source from Mililani to make their construction materials and stuff. And then most of the current gathering, I would say, because MTA has such tight restrictions, the Town Association, a lot of it does take place at the high school because, like for me, my backyard is mainly cement, so we can't plant anything in it. And everything is in pots, which obviously isn't ideal. [Kelsie Kuniyoshi]

Concerns and Recommendations*

I mean, I know, like, Kīpapa itself is, like, a Superfund site that I think just is being ignored, like, most of those. Yeah. It should be cleaned up and, like, given back to community at some point. [Olan Leimomi Fisher]

There is also a writing from Kim Duffet illustrating the connection between navigation and the area. The writing is on a plaque at Mililani Town Center, accompanying a sculpture. The plaque reads, "In ancient times, Hawaiian Kahuna came to this site (Mililani Town Center area) to view the heavens because of its elevation and openness. Today, many of the streets in the town of Mililani are named after Hōkū, or stars in the night sky." This should be further researched, as it would be the most culturally impactful information we may have regarding this area of Punalu'u and is very close to the proposed construction site. [Giovanni Kaanehe]

I mean, the access to the cultural significance is already pretty limited as it is. Because like what I mentioned, like Mililani being landlocked and then like the traditional kai resources are completely, well, filled in for the golf course, but unaccessible because where it is, is like the site of a Superfund. And there are, like, some teachers there that I would say are really awesome and are actively trying to teach the students the cultural side. There's just the two that would be there and like that, like that is what is ideal, like in an ideal world that if we were to show them the cultural sites, we just take them there, but there's no way to really do that right now. [Kelsie Kuniyoshi]

Mai Ma'a Nei - Listen so you can see (pay attention). Should any earth disturbance reveal our past deep beneath the surface, procedures should be respected and ensure that all protocols are followed. All steps are to be taken to repatriate any discovered iwi kūpuna or artifacts revealed. Perhaps a Cultural Monitor, or two, should be assigned to this project? [Jo-Lin Lenchanko Kalimapau]

What's really important always, yeah, for every project that you need, if you find iwi to have cultural monitors. So definitely, definitely. [Olan Leimomi Fisher]

And like I said, even up mauka, like it's, it's limited because of military and anyways, but… I've been to a couple of those meetings and there are two proposed sites one is at that ag space and the other would be kind of by the other side of the campus but it doesn't really, it just displaces, if it were to be on the ag space, it would displace one of the last remaining ag spaces in Mililani. And when I talked to the, when I went to the community meetings and I asked, why was that site chosen? Because the answer that I got, basically, was that when they drove by, they saw undeveloped land. And it was kind of frustrating because I know that if the football field was there, or if it was the band program, or if it was any other like building or whatever you want to call it, even the baseball field or like something, they wouldn't see it as undeveloped. And they just can't see with their own eyes that there's like a huge 'ulu tree there, there's coconut trees, there's a kalo library, there's a shade house, there's a mural with all the place names that the students helped to put together. Like that's just kind of sad to me. [Kelsie Kuniyoshi]

I did hear some, like, there was a little bit of controversy out because some folks were kind of sad to be losing the garden. So I don't know if maybe part, like a part of the area could

still be dedicated to native plants or I mean, I did actually try to push for that. Through my thesis, I think I even put potential ways that Mililani could better incorporate Hawaiian culture and history into its plan. And one was like to use more native plants and all the landscaping. [Olan Leimomi Fisher]

The pineapple industry destroyed the physical remains of any visible cultural sites in this and many areas of our ʻāina. However, depending how deep into the earth this project will go, it may reveal an unexpected and unknown past of this area. [Jo-Lin Lenchanko Kalimapau]

Kind of what I was saying, too, about how some people grow their food on campus. The old teachers let me come and pick ti leaves when I need to make lei, or they definitely let me grow stuff there if I need to. I don't live there now, so I don't go as often. But I know for a fact that some students grow their own food and stuff there. And if we're going to build there, then they need to make sure that their students are still offered areas that they can grow their stuff. And I know surely it's going to be reduced in size, which you can do vertical gardening or just other things to at least provide opportunities for students. Because people don't want to admit it, but food insecurity is bigger than we think in Mililani. And I definitely had a lot of friends in high school working jobs to pay for siblings' school lunches and stuff. And it's not free, it's only increased in price. And sometimes that's some people's only meals. So by offering students a place on campus to grow their food, that's really important. And sometimes even if, I know the project thing said they would replace the greenhouse, and they would replace all this, and offer another ag space. But the thing is that most plants do not grow within a day. It takes a lot of time and a lot of care, and they can go under shock. A lot of the healthy plants might not be as easily transplanted as we like to think. [Kelsie Kuniyoshi]

But that hasn't happened. I mean, I don't know, I feel like just it's not so much preserving it because we know that this whole area has already pretty much been bulldozed over, like, over and over again, you know, since sugar, pineapple, just developed Mililani. So it's like, bringing it back almost as much as you can. And like respectful and I think just like, you know, I think it's an opportunity, and I guess that's, that is the main reason I was, like, I wanted to talk to you, or at least to get it out there somewhere. Yeah. If you're listening, that just, like, just because it's, a new development doesn't mean you just erase the whole identity of that place, and, um, especially, like, the Hawaiian culture. If there's no Hawaiians, then there's no Hawaiʻi. You know what I mean? Whether it's through the building names or just, like, the language parts or the plants parts, some of the design. I feel like just kind of giving it that sense of place more with, like, where it is, too, in Waipiʻo, is really important. It's, so it's, yeah, it's not so much of, like, the protecting what's, I mean, it is. It's protecting what is, what's there beneath the, all of the change, that's been just erased over. And bringing it back and celebrating it again. [Olan Leimomi Fisher]

And It's pretty interesting because in reading and doing my own research about Mililani, especially from Leimomi Morgan's thesis, something that was striking was that at the time of her thesis, which was in 2014, students were asked to see what they see as key symbols of Mililani. And high schoolers, not even young students, high schoolers said that they saw a pineapple and a clock tower as key symbols of Mililani, which are not cultural at all. And even sadder, the way that they envision Mililani in the future is they see it as a restaurant town, but they can't acknowledge where that food would come from. And they see it as like, I don't know. It was just kind of, I just feel like the cultural education there is pretty limited as is, and there's a very low native Hawaiian population anyways. And when we continue to remove these spaces, and I really get the need for teacher housing and the whole thing about that bill… [Kelsie Kuniyoshi]

I hope some kind of, there can be some kind of mitigation for the loss of like the garden area though, but I don't, I don't really know how, like, or if there's another area or

> something that the school could use for a garden, that would be cool. ‘Cause that is really important too. [Olan Leimomi Fisher]
>
> So it [the ag program] has been under threat before, and I don’t think that we’re above it now. But even the other proposed space, the Site B, from what I understand, they would have to compromise... other portions of the campus. [Kelsie Kuniyoshi]
>
> Honestly, the best way to lessen the adverse effects is to make the ag program bigger. So it’s kind of nice if it seems like they’re adding another space in addition to the existing space. And if they must build, because I know it’s by law, with the whole teacher housing thing that the governor signed. I just think that no matter what, the least they could do is preserve as much of the space as they can. And I think the bigger issue that I see with even gardens being so close to teacher housing is like, because students grow, or me who wants to access it in my off time to go pick leaves or whatever, since actual teachers will live there, will students be able to actually access these spaces in their off time, like outside of school hours or on the weekends when there’s not supervision and stuff? Because I mean, I’m an adult. Certainly, I want to have a level of security and stuff. And it’s a really fine line, especially literally with boundaries between high school students and teachers. But I really still believe in the students still having access to grow stuff because it’s so strict in Mililani. My family got cited for having papaya trees and ferns, you know what I mean? ... You can only grow grass, which, in your planter strip, and they’ll get you for everything. So it’s just, because things are just so strict as is, the smallest amount of ag spaces that we have need to be preserved. [Kelsie Kuniyoshi]

*Subsequent to the interviews, Keala Pono learned that the portion of the project site that includes a garden is not a school program but is being tended to by a few of the school staff.

Summary of Ethnographic Survey

A total of three ethnographic interviews were conducted with individuals knowledgeable about the project area: Olan Leimomi Fisher, Jo-Lin Lenchanko Kalimapau, and Kelsie Kuniyoshi, and a written statement was submitted by Giovanni Kaanehe. Each of the interviewees are knowledgeable of cultural resources and traditional practices and beliefs, and the history associated with the study area, having grown up within Mililani and Wahiawā. Jo-Lin Lenchanko Kalimapau continues to reside near the project area and is an active historian and member of the Hawaiian Civic Club of Wahiawā. She remembers the project area prior to development when it was used for pineapple cultivation. Kelsie Kuniyoshi and Olan Leimomi Fisher’s parents continue to reside in Mililani. Kelsie Kuniyoshi understands the project area as an alumna of Mililani High School, from her experiences teaching classes about Hāloa and kalo, and growing and gathering plants such as ti from the project area. Olan Leimomi Fisher has completed extensive research on the histories of land use within Mililani for her thesis. Giovanni Kaanehe is a lineal descendant of Mililani. The interviewees expressed a diversity of connections to the project area, most of all expressing interest in bringing the older cultural history of the area into the design and perspective of this project.

The interviewees identified a variety of cultural sites and practices and natural resources in the Waipiʻo region. Cultural sites in the region include the Kūkaniloko complex, terraces, petroglyphs, rock shelters, ancient trails, maika fields, and housing platforms, the home of John Papa ʻĪʻī, and the ʻĪʻī family burial ground. Giovanni Kaanehe shared the potential connection between Moaʻula Heiau in Waipiʻo, Oʻahu to Moaʻula Heiau on Hawaiʻi Island. Niu hiwa and ʻape ula were known to grow at Moaʻula Heiau. There were no known cultural sites within the proposed project area although each of the interviewees drew attention to historical events such as the nearby Battle of Kīpapa that heighten the potential for iwi kūpuna to be found. Kīpapa Gulch is home to Moaʻula Heiau and Heiau o Umi. Current cultural practices within the area are surrounding the proposed project are limited due to the extensive historic land use changes and reduced numbers of native plants. Hiking

in Kīpapa Gulch was one cultural practice in the surrounding area that was shared. Cultural practices at Mililani High School include cultivation of kalo, ʻulu, coconuts, kō, kukui, squash, and other food crops, gathering of ti, cultural stewardship, native plant propagation, and preparing imu. Natural resources shared to have been in the surrouding area include natives koa, māmaki, ʻōhiʻa lehua, mamo, ʻāhihi, ʻiliahi, and hā, and special attention was given to cultivation histories in the area, both of contemporary and historic usage. Traditional cultivars known to Waipiʻo include maiʻa iholena loha, ʻawa, several varieties of kalo, and ʻuala.

While there was general support from the interviewees for the proposed project because of the need for teacher housing, several concerns and recommendations were shared. Key concerns include the declining connections between students and the cultural history and landscape of Mililani; ground disturbance may encounter iwi kūpuna and artifacts; potential impact on agricultural and gathering activities of students and community members; and that there may be a compromise of student programs for the teacher housing. The interviewees recommended the following: 1) follow cultural protocols and repatriation if any iwi kūpuna or artifacts are encountered; 2) have cultural monitors present during ground disturbing activities; 3) incorporate the cultural identity and rich history of Mililani into the building designs; 4) include native plants into landscaping and project design; 5) expand agricultural spaces and programs; 6) research and utilize navigational and star names within the project that have ties to Mililani; and 7) continue to have open conversations with community members and follow recommendations that are shared.

The purpose of this CIA is to identify cultural resources, practices, and beliefs within the project area; determine if the project will affect those resources, practices, and beliefs or access to cultural resources and practices; and delineate mitigation actions to any resources, practices, and beliefs that will be affected. Table 4 lists each cultural resource, practice, and belief identified during the CIA along with where it was mentioned (ethnographic survey or background research). Also included are effects of the proposed project on the resource, practice, or belief, and recommendations for mitigation. These are discussed further in the following sections.

Cultural Resources, Practices, and Beliefs Identified

The interviewees identified a rich myriad of cultural practices, archaeological sites, and vibrant landscape of moʻolelo in the region. The surrounding landscape, part of the Kūkaniloko complex includes many cultural sites including the Kūkaniloko birthing stones, the Oahualua Stone, the Oʻahu Nui Stone, Moaʻula Heiau, Heiau a ʻUmi, and the home of historic figure, Jon Papa ʻĪʻī. Interviewees discussed burial locations of the ʻĪʻī family. These burial sites were explicitly discussed to be located within the Makalena Golf Course, which was historically near former fishpond, Loko ʻEo. There were no known cultural sites within the proposed project area although each of the interviewees drew attention to historical events such as the nearby Battle of Kīpapa that heighten the potential for iwi to be uncovered. The interviewees cite moʻolelo that speak of bodies that lined the sides of Kīpapa Gulch and that were near Nob Hill.

Significant natural resources and linked cultural practices were shared. Special attention was given to cultivation histories in the area, both of contemporary and historic usage. Mauka Mililani had many Māhele land claims tied to dryland cultivation and gathering practices including plants such as maiʻa, kō, ʻuala, dryland kalo, koa, kukui, ti, and ʻiliahi. Historic cultural practices in the surrounding area include its use as the royal center of Oʻahu which included training of warriors in Līhuʻe, use of the Kūkaniloko Birthing Stones, and historic battles. Many of the moʻolelo surrounding the Mililani area are tied to the reign of aliʻi Maʻilikūkahi.

Current cultural practices within the surrounding area are limited due to historic land use changes and reduced numbers of native plants. Hiking in Kīpapa Gulch was one cultural practice in the surrounding area that was shared. Cultural practices at Mililani High School include cultivation of kalo, ʻulu, coconuts, kō, kukui, squash, and other food crops, gathering of ti, cultural stewardship, native plant propagation, and making imu. Street names around the project area were named after stars and navigational terms. Interviewees expressed interest in further consideration of these names to be utilized within the current proposed project. Surrounding place names include Punaluʻu, Kīpapa, Keaʻakukui Gulch, Waiāhole Ditch, Waikakalaua, Oʻahu Nui, and Kūkaniloko. Interviewees shared that the ahupuaʻa name, Waipiʻo, refers to curved water and rainbows as physical manifestations of akua and ancestors. Mele Waipiʻo was shared, of importance to the ʻĪʻī family descendants and noting the Laulani wind. Kanoenoe was another wind name of the area.

Interviewees describe significant changes to Mililani including overharvestation of sandalwood trees, the historic shift from native forest to pineapple and sugar cultivation, changes to Puʻuloa (Pearl Harbor) and Loko ʻEo that severed connections to kai resources within Waipiʻo Ahupuaʻa, increases in invasive species populations such as albizia, use of Kīpapa as a Superfund site, and historic destruction of cultural sites during the pineapple era and during construction of the H-2 Freeway. Other changes have occurred within the lifetimes of the interviewees including limitations emplaced by the Mililani Town Association on what can be grown at residences, growing disconnects between students and the cultural history and identity of their ahupuaʻa, aesthetically

Table 4. Cultural Resources, Practices, and Beliefs Identified, Effects of the Proposed Project, and Proposed Mitigation Actions

Summary: This three-column matrix assesses project impacts on local heritage. The columns read from left to right: Cultural Resource, Practice, or Belief; Effects of the Proposed Project; and Proposed Mitigation Action. The rows are organized sequentially under three thematic category header blocks: Cultural Resources, Cultural Practices, and Cultural Beliefs. Each row details an identified asset, how it is affected by the project, and the corresponding mitigation or recommendation.

	Cultural Resource, Practice, or Belief	Effects of the Proposed Project	Proposed Mitigation Action
Cultural Resources	Traditional and Historic Sites [Background Research]	The current project area is a built environment that has undergone extensive previous disturbance in historic and modern times. It is not likely that any surface archaeological features remain. Nevertheless, archival sources and previous archaeological studies suggest the potential for cultural materials and deposits to be present in a subsurface context on the property.	Repatriation of any cultural materials that may be encountered during project construction.
	Iwi Kūpuna & Artifacts [Ethnographic Interviews]	Given the surrounding historic battles of Kīpapa and location within the cultural landscape of Kūkaniloko, there is the potential to encounter iwi kūpuna and/or artifacts.	Provide a cultural monitor during ground disturbance activities.
Cultural Practices	Cultural Agriculture [Ethnographic Interviews]	None- the proposed project site plan B is not located where the primary high school agricultural garden is located.	None- the proposed project will not affect this resource. It is recommended that landscape design incorporates native plants and that gardens are made accessible to students during non-school hours for use.
	Imu Practice [Ethnographic Interviews]	None- the proposed project site plan B is not located where imu is located.	None- the proposed project will not affect this resource. Ensure that if the imu is effected, the site for a new one will be found.
	Perpetuation of Place Names and Mo‘olelo, and other traditional knowledge [Background Research, Ethnographic Interviews]	None- the proposed project will not affect the perpetuation of traditional Hawaiian knowledge.	It is recommended that the project incorporate traditional knowledge such as mo‘olelo and place names into its design.
Cultural Beliefs	Beliefs that iwi kūpuna should be protected [Ethnographic Interviews]	None- the proposed project will not affect cultural beliefs surrounding human burial.	None- the proposed project will not affect this belief.
	Beliefs relating to traditional religion, akua, and ancestors [Ethnographic Interviews, Background Research]	None- the proposed project will not affect cultural beliefs about religion, akua, and ancestors.	None- the proposed project will not affect this belief.

unpleasing changes made to the high school in recent years (e.g., fencing), closing of smaller mom and pop shops, and continued military activity in upland areas.

Potential Effects of the Proposed Project on Cultural Resources, Practices, and Beliefs

Interviewees corroborated that the main impacts of the proposed improvements will depend on the extent that it displaces pre-existing student programs including the agricultural program. The project has the potential to have a positive effect on cultural practices if it can incorporate native plants into landscape design, promote and extend cultural agricultural space and access for students, and incorporate Hawaiian cultural knowledge into the design of the housing. There is the potential to encounter iwi kūpuna or cultural artifacts during ground disturbance.

Recommendations and Mitigations

There was general support from the interviewees for the proposed project with understanding for the need for teacher housing. There were several concerns and recommendations that were shared pertaining to the proposed project. Addressing these would further support the project being done in a pono way.

Key concerns include:

- Declining connections between students and the cultural history and landscape of Mililani.
- Ground disturbance at certain depths may encounter the resting places of iwi kūpuna and artifacts.
- Potential impact on agricultural and gathering activities of students and community members.

The interviewees recommended the following:

- Cultural protocols and repatriation should be followed if any iwi kūpuna or artifacts are encountered.
- Have cultural monitors present during ground disturbing activities.
- Incorporate the cultural identity and rich history of Mililani into the building designs.
- Research and utilize navigational and star names within the project that have ties to Mililani.
- Include native plants into landscaping and project design.
- Expand agricultural spaces and programs. This can be facilitated by ensuring that there are ways for students to access the agricultural spaces near the teacher housing outside of school hours or on the weekends.
- Continue to have open and transparent conversations with community members and follow recommendations that are shared.

Confidential Information Withheld

No sensitive or confidential information was withheld during the course of researching the current report or conducting the ethnographic survey.

Conflicting Information

No conflicting information was obvious in analyzing the ethnographic interviews. On the contrary, a number of themes were repeated and information was generally confirmed by independent sources.

GLOSSARY

ʻāhihi	A low spreading bush (*Metrosideros* spp.).
ahupuaʻa	Traditional Hawaiian land division usually extending from the uplands to the sea.
ʻāina	Land.
akua	God, goddess, spirit, ghost, devil, image.
akule	Big-eyed or goggled-eyed scad fish (*Trachurops crumenophthalmus*).
ʻala	Fragrant, sweet-smelling, fragrance.
albizia	A genus of trees invasive to Hawaiʻi, particularly *Falcataria moluccana*.
aliʻi	Chief, chiefess, monarch.
ʻamaʻama	Striped mullet fish.
ʻape ula	A variety of the large plants *Alocasia macrorrhiza* or *Xanthosoma roseum*, that resemble taro. In traditional Hawaiʻi, ʻape was planted near gates, and leaves were placed under the sick because they were believed to deter evil spirits. They were not planted near houses.
ʻawa	Kava; plant cultivated for ceremonial, medicinal, and social use.
Hāloa	First man in Hawaiian genealogy.
hapa	A person who is of diverse ethnic makeup; often part Caucasian. Literally "half."
hau	The indigenous tree *Hibiscus tiliaceous*, which had many uses in traditional Hawaiʻi. Sandals were fashioned from the bark and cordage was made from fibers. Wood was shaped into net floats, canoe booms, and various sports equipment and flowers were used medicinally.
heiau	Place of worship and ritual in traditional Hawaiʻi.
Hiʻiaka	Most commonly refers to Hiʻiakaikapoliopele, the youngest sister of the goddess Pele, although all twelve of Pele's younger sisters have Hiʻiaka as the first part of their names.
hoaʻāina	Literally "land companion"; a tenant or cultivator of land within an ahupuaʻa.
hoʻokupu	Tribute, offering, religious gift.
huakaʻi pō	Night march; supernatural procession of ancestral warrior spirits; Night marchers.
iʻa	Fish or other marine animal.
iholena loha	Ancient variety of Hawaiian cooking banana. Lit. drooping, wilting, hanging low.
ʻike	To see, know, feel; knowledge, awareness, understanding.
ʻili	Traditional land division, usually a subdivision of an ahupuaʻa.
ʻiliahi	*Santalum* spp., refers to all types of Hawaiian sandalwood.
imu	Underground pit or oven used for cooking.
iwi	Bone.

Kahiki A far away land, sometimes refers to Tahiti.

kai Sea, sea water; area near the sea, seaside, lowlands; tide, current in the sea; insipid, brackish, tasteless.

kāī Varieties of kalo, whose corms are fragrant when cooked. Varieties mentioned include kea, ʻala, and uliuli.

kalo The Polynesian-introduced *Colocasia esculenta*, or taro, the staple of the traditional Hawaiian diet.

kamaʻāina Literally "child of the land"; a long-time resident or one deeply familiar with a place.

Kanaloa A major god, typically associated with Kāne.

Kāne The leading of the traditional Hawaiian deities.

kapu Taboo, prohibited, forbidden.

kī The plant *Cordyline* spp., whose leaves were traditionally used in house thatching, raincoats, sandals, whistles, and as a wrapping for food.

kiaʻi Guard, caretaker; to watch or guard; to overlook, as a bluff.

Kīpapa Literally to pave, or a paved surface. Figurately "Placed Prone". Associated with Kīpapa Gulch, where bodies were said to have been left prone, effectively paving the area after battles.

kō The Polynesian introduced *Saccharum officinarum*, or sugarcane, a large grass traditionally used as a sweetener and for black dye.

koa *Acacia koa*, the largest of the native forest trees, prized for its wood, traditionally fashioned into canoes, surfboards, and calabashes.

konohiki The overseer of an ahupuaʻa ranked below a chief; land or fishing rights under control of the konohiki; such rights are sometimes called konohiki rights.

kuapā Wall of a fishpond.

kukui The candlenut tree, or *Aleurites moluccana*, the nuts of which were eaten as a relish and used for lamp fuel in traditional times.

kula Plain, field, open country, pasture, land with no water rights.

kuleana Right, title, property, portion, responsibility, jurisdiction, authority, interest, claim, ownership.

kumu hula Hula teacher/master.

kupekala A bivalve of Pearl Harbor, possibly *Chama* spp.

kupuna Grandparent, ancestor; kūpuna is the plural form.

lehua The native tree *Metrosideros polymorpha*, the wood of which was utilized for carving images, as temple posts and palisades, for canoe spreaders and gunwales, and in musical instruments; a taro variety that makes red poi.

lei niho palaoa Ivory pendant, originally probably whale's tooth, also of stone, shell or wood, later also of walrus tusk.

Lepau Literally “decayed” or “dilapidated,” but contextually a specific locality in Waipiʻo.

lepo Dirt, earth; dirty.

Līhuʻe “Cold chill” or “cold setting”; historically, the sacred and chiefly center of Oʻahu located in the ʻEwa region.

loʻi, loʻi kalo An irrigated terrace or set of terraces for the cultivation of taro.

loko iʻa Fishpond; traditional aquaculture system.

lua Traditional Hawaiian martial art of hand-to-hand combat.

luakini Large heiau of human sacrifice.

mahamoe Sleek, as a plump animal, attractive; smooth; also the name of an edible bivalve.

Māhele The 1848 division of land.

maʻi ʻokuʻu Epidemic or pestilence; historically refers to diseases that devastated Native Hawaiian populations.

maiʻa The banana, or *Musa* sp., whose fruit was eaten and leaves used traditionally as a wrapping for cooking food in earth ovens.

maika Ancient Hawaiian game suggesting bowling.

makaʻāinana Common people, or populace; translates to “people that attend the land.”

makai Toward the sea.

mākua Parent, relative of the parent’s generation; Catholic father. Plural mākua.

māla Garden, plantation, patch, cultivated field.

māmaki Native shrub (*Pipturus albidus*), whose leaves are used for tea and bark fibers for kapa (barkcloth).

manaʻo Thoughts, opinions, ideas.

mauka Toward the mountains.

mele Song, chant, or poem.

mililani To praise, exalt; to give thanks.

mōʻī Sovereign, king or queen; supreme ruler of Hawaiʻi.

moku District, island.

momi Pearl; name for the shell pūpū Niʻihau; center of the eye or a fish eyeball; a watch face; the jackfish nuku momi.

moʻo Lizard, dragon, water spirit; narrow strip of land, smaller than an ʻili.

moʻokūʻauhau Genealogy.

moʻolelo A story, myth, history, tradition, legend, or record.

nāhelehele Wilderness, forest, grove; vegetation, trees, weeds, undergrowth.

niu hiwa One of two Hawaiian cultivars of coconut (*Cocos nucifera*) used ceremonially.

ʻohā Taro corm growing from the older root.

ʻohana Family.

ʻōhiʻa ʻai The mountain apple tree, *Eugenia malaccensis*, a forest tree that grows to 50 ft high.

ʻōhiʻa hā The tree *Eugenia* [*Syzygium*] *sandwicensis*, related to the mountain apple, with edible red fruit. The bark was used traditionally to make black dye.

ʻōhia lehua The native tree *Metrosideros polymorpha*, the wood of which was utilized for carving images, as temple posts and palisades, for canoe spreaders and gunwales, and in musical instruments.

ʻokipuʻu Forest clearing or cultivated plot in upland regions.

ʻōlelo noʻeau Proverb, wise saying, traditional saying.

oli Chant.

olohe "Hairless". Represented in legends as cannibalistic "professional robbers" and experts in the martial art of *lua* (bone-breaking combat)

olona Native plant (*Touchardia latifolia*) prized for its exceptionally strong fiber used in nets, cordage, and fishlines.

ʻōpala Rubbish, trash, garbage, junk.

ʻowāʻowaka A bivalve, possibly of the family *Isognomonidae*.

pali Cliff, steep hill.

Papa Earth mother goddess.

pāpaua The clam *Isognomon*, a bivalve.

Pele The volcano goddess.

piko Navel; summit; center.

pipi Hawaiian pearl oyster.

pono Correct, proper, good.

post-contact After A.D. 1778 and the first written records of the Hawaiian Islands made by Captain James Cook and his crew.

pre-contact Prior to A.D. 1778 and the first written records of the Hawaiian Islands made by Captain James Cook and his crew.

Puʻuloa "Long hill". Traditional name for Pearl Harbor.

sandalwood **ʻ**Iliahi (*Santalum*), several varieties endemic to Hawaiʻi. Known for their aromatic wood and medicinal qualities. Heavily exported in the 1800s.

ti (kī) The plant *Cordyline terminalis*, whose leaves were traditionally used in house thatching, raincoats, sandals, whistles, and as a wrapping for food.

tūtū Grandmother or grandfather.

ua hala To pass away, pass on.

‘uala	Sweet potato (*Ipomoea batatas*).
uhi	The yam *Dioscorea alata*, commonly grown for food.
‘ulu	The Polynesian-introduced tree *Artocarpus altilis*, or breadfruit.
‘ulu maika	Stone used in the maika game, similar to bowling.
wahi pana	Sacred places or legendary places that may or may not be kapu, or taboo.
wā kahiko	Times of old.
Wākea	Sky father, consort of Papa.
wao	The uplands or inland region.
wauke	The paper mulberry, or *Broussonetia papyrifera*, which was made into tapa cloth in traditional Hawai‘i.

REFERENCES

Alexander, W.D.
1875 *Plan of Part of Waikele, Oahu.* Hawaiian Government Survey. Registered Map 120. 500 ft = 1 in.

Andrews, L.
1865 A Dictionary of the Hawaiian Language. Henry M. Whitney, Honolulu.

Beamer, B.
2008 *Na wai ka mana? ʻŌiwi Agency and European Imperialism in the Hawaiian Kingdom*. Diss. University of Hawaiʻi, Honolulu.

Beardsley, F.
2001 *Phase II – Intensive Survey and Testing Naval Air Station Barbers Point Land of Honouliuli, ʻEwa District, Island of Oʻahu*. Contract No. N62742-93-D-0502 Delivery Orders No. 7 and No. 19. International Archaeological Research Institute, Inc., Honolulu.

Bishop, S.
1901 ʻEwa, Oʻahu: Old Memories. *The Friend* 59(5), May. Honolulu.

Boelen, J.
1988 *A Merchant's Perspective: Captain Jacobus Boelen's Narrative of his visit to Hawaiʻi in 1828*. The Hawaiian Historical Society, Honolulu.

Brown, J.F.
1877 *Map of Waipio, Ewa, Oahu.* Compiled by J.F. Brown. Scale 1:24000. Area 16,250 acres.

Campbell, A.
1819 *Voyage Round the World from 1806–1812*. New York.

Carson, A.
2025 *Historic Property Evaluation – Survey Form for Mililani Waena Elementary School*. FAI Architects, Honolulu, Hawaiʻi.

Chong, D.D.L.
1998 *Ancestral Reflections: Hawaii's Early Chinese of Waipahu*. Waipahu Tsoong Nyee Society, Waipahu, Hawaiʻi.

Condé, J.C., and G.M. Best
1973 *Sugar Trains: Narrow Gauge Rails of Hawaiʻi.* Glenwood Publishers, Felton, California.

Cordy, R.
1981 *A Study of Prehistoric Social Change: The Development of Complex Societies in the Hawaiian Islands*. Academic Press, New York.

2002 *The Rise and Fall of the Oʻahu Kingdom*. Mutual Publishing, Honolulu.

Coulter, J.W. and C.K. Chun
1937 *Chinese Rice Farmers in Hawaiʻi*. University of Hawaii Research Publications, Number 16. University of Hawaiʻi, Honolulu.

Day, A.G.
1984 *John Papa ʻĪʻī: A Biography.* University of Hawaiʻi Press, Honolulu.

Ellis, W.
1963 Journal of William Ellis: Narrative of a Tour of Hawaiʻi, or Owhyhee; with Remarks on the History, Traditions, Manners, Customs and Prospects of the Sandwich Islands. Advertiser Publishing Co., Honolulu. (Originally published 1825; reprinted 1917).

Foote, D., E. Hill, S. Nakamura, and F. Stephens
1972 *Soil Survey of the Islands of Kauai, Oahu, Maui, Molokai, and Lanai, State of Hawaii*. United States Department of Agriculture, Soil Conservation Service. Published in cooperation with the University of Hawaii Agricultural Experiment Station, Washington, D.C.

Fornander, A.
1916 *Fornander Collection of Hawaiian Antiquities and Folk-Lore. Vol. IV*. Bishop Museum Press, Honolulu.
1918 *Fornander Collection of Hawaiian Antiquities and Folk-lore.* B.P. Bishop Museum Memoirs, Volume V, Part I. Bishop Museum, Honolulu.
1919 *Fornander Collection of Hawaiian Antiquities and Folk-lore.* B.P. Bishop Museum Memoirs, Volume V, Part II. Bishop Museum, Honolulu.
1996 *Ancient History of the Hawaiian People to the Times of Kamehameha I*. Mutual Publishing, Honolulu.

Giambelluca, T.W., Q. Chen, A.G. Frazier, J.P. Price, Y.-L. Chen, P.-S. Chu, J.K. Eischeid, and D.M. Delparte
2013 Online Rainfall Atlas of Hawai'i. Bulletin of the American. Meteorological Society 94: 313–316, doi: 10.1175/BAMS-D-11-00228.1.

Gomes, A.
2008 *Mililani ends 40 years of building*. Honolulu Advertiser, Honolulu, Hawai'i. https://archives-new.honoluluadvertiser.com/article/2008/Jun/21/bz/hawaii806210324.html Accessed November 2025.

Hammatt, H.H., L. Pyle, V. Creed, T. Devereaux, and R. Chiogioji
1996 *Archaeological Inventory Survey of a 1339-Acre Parcel at Castle and Cooke Lands Within Portions of Waipi'o and Wai'awa Ahupua'a, O'ahu (TMK 9-4-06:01, 03 & 10 por.; and 9-5-03:01 por., 04 & 07; and 9-6-04:21).* Cultural Surveys Hawai'i, Inc., Kailua, Hawai'i.

Hammatt, H.H., D.W. Shideler, and D.F. Borthwick
1996 *Archaeological Reconnaissance Survey of the Waikakalaua Ammo Storage Tunnels Site, An Waikele, 'Ewa, O 'ahu*. Cultural Surveys Hawai'i, Kailua, Hawai'i.

Hammatt, H.H., D.W. Shideler, and K.W. Bushnell
2002 *An Archaeological and Cultural Impact Evaluation for the Proposed Mililani Community Transit Center, Waipi'o Ahupua'a, 'Ewa District, O'ahu.* Cultural Surveys Hawai'i, Kailua, Hawai'i.

Hammatt, H. H., P. R. Mills, and E. K. Shideler
2010 *Archaeological Inventory Survey for the Honolulu High-Capacity Transit Corridor Project, Volume IV: Waiawa to Aloha Stadium, Island of O'ahu. Prepared for the Honolulu High-Capacity Transit Corridor Project and Parsons Brinckerhoff, Honolulu*. Cultural Surveys Hawai'i, Inc., Kailua. Manuscript on file at the State Historic Preservation Division, Department of Land and Natural Resources, Kapolei, Hawai'i.

Handy, E.S. and E.G. Handy (with the collaboration of M.K. Pukui)
1991 *Native Planters in Old Hawaii; Their Life, Lore, and Environment*. Revised Edition. Bernice P. Bishop Museum Bulletin 23, Bishop Museum Press, Honolulu.

Hawaiian Historical Society
2003 *Buke Mele Lahui*. Copy of original printed in 1895. Hawaiian Historical Society, Honolulu.

'Ī'ī, J.P.
1959 *Fragments of Hawaiian History*. Bishop Museum Press, Honolulu.

Judd, C.A.
1933 The Parasitic Habit of the Sandalwood Tree. *Thrum's Hawaiian Annual* pp. 81–88.

Kamakau, S.M.
1991 *Tales and Traditions of the People of Old: Na Mo'olelo a ka Po'e Kahiko*. Translated by Mary Kawena Pukui. Ed. by Dorothy B. Barrere. Bishop Museum Press, Honolulu.
1992 *Ruling Chiefs of Hawaii*. Revised Edition. Originally published 1869–1870. The Kamehameha Schools Press, Honolulu.

Kanahele, G.S.
1995 *Waikiki 100 B.C. To 1900 A.D.: An Untold Story*. The Queen Emma Foundation, Honolulu.

Kanakanui, S.E.
1894 *Pearl Harbor and Ewa.* Hawaiian Government Survey, W.D. Alexander, Surveyor General. Scale 1:24,000.

Kirch, P.V.
2010 *How Chiefs Became Kings: Divine Kingship And The Rise Of Archaic States In Ancient Hawai'i.* University of California Press, Berkeley and Los Angeles.

Kukaniloko.org
n.d. https://www.kukaniloko.org/ Accessed October 2025

Lawyer, D.D.
2003 *All-American Mililani Town*. The Honolulu Advertiser, sec. R. May 4, 2003.

Lucas, P.F.
1995 *A Dictionary of Hawaiian Legal Land-Terms.* Native Hawaiian Legal Corporation, Honolulu, and University of Hawai'i Committee for the Preservation and Study of Hawaiian Language, Art and Culture, Honolulu.

Lyons, C.J.
1876 *Oahu Government Survey.* Hawaiian Government Survey. Scale 1:60000. Registered Map 1380.

MacDonald, G.A., A.T. Abbott, and F.L. Peterson
1983 *Volcanoes in the Sea*. Second Edition. University of Hawai'i Press, Honolulu.

Mahinske, Tech. Sgt.
1935 *Schofield Barracks Mil. Reservation.* Department Engineer Office, H.H.D., Fort Shafter, T.H. Scale 1"=1,000 ft. Registered Map 2139). Courtesy of David Crowley, Cultural Resources Manager, DPW Environmental Division, U.S. Army Garrison – Hawaii.

Maly. K. and O. Maly
2003 *He Wahi Mo'olelo No Ponahawai A Me Punahoa Ma Hilo: A Collection of Traditions and Historical Accounts for Ponahawai and Punahoa, District of Hilo, Island of Hawai'i (TMK 2-3-44:19; 2-3-49:53; 2-3-37:01)*. Kumu Pono Associates, Hilo, Hawai'i.

McAllister, J.G.
1933 *Archaeology of O'ahu*. Bishop Museum Bulletin 104. Bernice P. Bishop Museum, Honolulu.

Morgan, O.
2014 *Ka Mo'olelo o Mililani: The Story Beneath the Development in Waipi'o, 'Ewa, O'ahu*. Thesis. University of Hawai'i at Mānoa, Honolulu.

Murabayashi, K., and T. S. Dye
2013 *Historic Properties Assessment for the Proposed VZW Mililani High School Replacement Communications Facility, Waipi'o Ahupua'a, 'Ewa District, O'ahu (TMK: [1] 9-5-001:054).* Prepared for Verizon Wireless. T. S. Dye & Colleagues, Archaeologists, Inc., Honolulu.

Native Register
1847–1853 Register of Kuleana Claims to Quiet Land Titles in the Hawaiian Islands, Native Island of O'ahu. State of Hawai'i Archives, Honolulu.

Nogelmeier, M.P.
2006 "Commentary." *The Epic Tale of Hi'iakaikapoliopele*. Awaiaulu: Hawaiian Literature Project, Honolulu.

Pacific Housing Assistance Corporation
2025 *Mililani High School Teacher Housing Site Plan*. Pacific Housing Assistance Corporation, Honolulu.

Pukui, M.K.
1983 *ʻŌlelo Noʻeau; Hawaiian Proverbs and Poetical Sayings*. Bernice P. Bishop Museum Special Publication No. 71. Bishop Museum Press, Honolulu.

Pukui, M.K., S.H. Elbert and E.T. Mookini
1974 *Place Names of Hawaiʻi*. University of Hawaii Press, Honolulu.

Rosendahl, M. L. K.
1987 *Archaeological Reconnaissance of Mililani Town Station, ʻEwa District, Island of Oʻahu (TMK 9-5-01:54).* Letter to S. A. Dietz. PHRI, Hilo, Hawaiʻi.

State of Hawaiʻi
1985 *Tax Map Key (TMK) Plat (1) 9-5-01*. City and County of Honolulu, Department of Planning and Permitting, Honolulu.

Stearns, H. T.
1939 *Geologic Map and Guide of the Island of Oahu, Hawaii*. Bulletin 2. Hawaiʻi Division of Hydrography, Honolulu.

Sterling, E.P. and C.C. Summers
1978 *Sites of Oahu*. Bishop Museum Press, Honolulu.

St. John, H.
1947 The History, Present Distribution and Abundance of Sandalwood on Oʻahu, Hawaiian Islands: Hawaiian Plant Studies 14. *Pacific Science* 1:5–20.

Taylor, A.P.
1922 *Under Hawaiian Skies*. Honolulu Advertiser Publishing Company, Honolulu.

Treiber, G.E.
2003 *Hawaiian Railway Album WWII Photographs*. The Railroad Press, Hanover, PA.

Tomonari-Tuggle, M.J. and R. Blankfein
1997 *Upland Settlement, Leilehua Ranch, and the Military: An Assessment of the Archaeology of the Schofield Barracks Cantonment*. International Archaeological Research Institute, Inc., Honolulu.

USGS (United States Geological Survey)
1998 *Geohydrology of the Central Oahu, Hawaii, Ground-Water Flow System and Numerical Simulation of the Effects of Additional Pumping.* Department of the Interior, Washington, D.C.

2025 *Mililani Town Quadrangle Map*. 1:24000 scale. U.S. Geological Survey, Washington, D.C.

Vancouver, G.
1801 A Voyage of Discovery to the North Pacific Ocean and Round the World. 6 vols., London.

Waihona ʻAina
n.d. Online Māhele database. https://waihona.com. Accessed August 2025.

Wall, W.E.
1902 *Hawaiʻi Territory Survey, Oahu, Hawaiian Islands*. Scale 1:5000.

APPENDIX A: AGREEMENT TO PARTICIPATE

Mililani High School Teacher Workforce Housing Project
Gina McGuire, Ethnographer, Keala Pono Archaeological Consulting

You are invited to participate in a Cultural Impact Assessment (CIA) for the proposed Mililani High School Teacher Workforce Housing Project in Waipiʻo Ahupuaʻa, on the Island of Oʻahu (herein referred to as "the Project"). The Assessment is being conducted by Keala Pono Archaeological Consulting (Keala Pono), a cultural resource management firm, at the request of PBR Hawaii and Associates. The ethnographer will explain the purpose of the Assessment, the procedures that will be followed, and the potential benefits and risks of participating. A brief description of the Assessment is written below. Feel free to ask the ethnographer questions if the procedures need further clarification. If you decide to participate, please sign the attached Consent Form. A copy of this form will be provided for you to keep.

Description of the Project
This CIA is being conducted to collect information about the Project in Waipiʻo Ahupuaʻa, ʻEwa Moku, through interviews with individuals who are knowledgeable about this area, and/or about information including (but not limited to) cultural practices and beliefs, moʻolelo, mele, or oli associated with this area. The goal of this Assessment is to identify and understand the importance of any traditional Hawaiian and/or historic cultural resources, or traditional cultural practices within the Project. This Assessment will also attempt to identify any effects that the proposed development may have on cultural resources present, or once present within the Project area.

Procedures
After agreeing to participate in the Assessment and signing the Consent Form, the ethnographer will digitally record your interview and it may be transcribed in part or in full. The transcript may be sent to you for editing and final approval. Data from the interview will be used as part of the ethno-historical report for this project and transcripts may be included in part or in full as an appendix to the report. The ethnographer may take notes and photographs and ask you to spell out names or unfamiliar words.

Discomforts and Risks
Possible risks and/or discomforts resulting from participation in this Assessment may include, but are not limited to the following: being interviewed and recorded; having to speak loudly for the recorder; providing information for reports which may be used in the future as a public reference; your uncompensated dedication of time; possible misunderstanding in the transcribing of information; loss of privacy; and worry that your comments may not be understood in the same way you understand them. It is not possible to identify all potential risks, although reasonable safeguards have been taken to minimize them.

Benefits
This Assessment will give you the opportunity to express your thoughts and opinions and share your knowledge, which will be considered, shared, and documented for future generations. Your sharing of knowledge may be instrumental in the preservation of cultural resources, practices, and information.

Confidentiality
Your rights of privacy, confidentiality and/or anonymity will be protected upon request. You may request, for example, that your name and/or sex not be mentioned in the Assessment material, such as in written notes, on tape, and in reports; or you may request that some of the information you provide remain off-the-record and not be recorded in any way. To ensure protection of your privacy, confidentiality and/or anonymity, you should immediately inform the ethnographer of your requests. The ethnographer will ask you to specify the method of protection and note it on the attached Consent Form.

Refusal/Withdrawal
At any time during the interview process, you may choose to not participate any further and ask ethnographer for the tape and/or notes. If the transcription of your interview is to be included in the report, you will be given an opportunity to review your transcript, and to revise or delete any part of the interview.

APPENDIX B: CONSENT FORM

Consent Form

I, _____, am a participant in the Cultural Impact Assessment (Assessment) for the proposed Mililani High School Teacher Workforce Housing Project (herein referred to as "the Project"). I understand that the purpose of the Assessment is to conduct oral history interviews with individuals knowledgeable about the Project and the surrounding ahupua'a in an effort to identify and protect traditional cultural practices and cultural resources.

_____ I understand that Keala Pono Archaeological Consulting (Keala Pono) and/or PBR Hawaii and Associates (the client) will retain the product of my participation (digital recording, transcripts of interviews, etc.) as part of their permanent collection and that these materials will only be used for scholarly, educational, and/or land management purposes.

_____ I hereby grant to Keala Pono and the client the right to use the property that is the product of my participation (e.g., my interview, written materials, and any other materials I provide) for the Assessment as stated above. By giving permission, I understand that I do not give up any copyright or performance rights that I may hold.

_____ I also grant to Keala Pono and the client my consent for any photographs provided by me or taken of me in the course of my participation in the Assessment to be used, published, and copied by Keala Pono and/or the client and its assignees in any medium for purposes of the Assessment.

_____ I agree that Keala Pono and the client may use my name, photographic image, biographical information, statements, and voice reproduction for this Assessment without further approval on my part.

_____ If transcriptions are to be included in the report, I understand that I will have the opportunity to review and edit my transcripts to ensure that they accurately depict what I meant to convey. I understand I have the power to delete any information I deem too sensitive and/or too personal for publication from the transcript. I also understand that if I do not return the revised transcripts after two weeks from the date of receipt, my signature below will indicate my release of information for the draft Assessment, although I will still have the opportunity to make revisions during the draft review process.

_____ I further understand that not giving my consent to any portion of the above listed items will not prevent my mana'o being included in the Assessment. For example, I may decline Keala Pono or their client permission to use my photographic image or biographical information but by signing this Consent Form, still grant my permission for my mana'o to be included in the text of the Assessment.

By signing this consent form, I am acknowledging that I have been informed about the purpose of this Assessment, the procedure, how the data will be gathered, and how the data will be used. I understand that my participation is strictly voluntary, and that I may withdraw from participation at any time without consequence.

Consultant Signature **Date**

Print Name **Phone**

Address

Thank you for participating in this valuable study.

APPENDIX C: TRANSCRIPT RELEASE FORM

Transcript Release

I, _____, am a participant in the Cultural Impact Assessment for the proposed Mililani High School Teacher Workforce Housing Project (herein referred to as "the Project") and was interviewed for the Assessment. I have reviewed the transcripts of the interview and agree that the transcript is complete and accurate except for those matters delineated below under the heading "CLARIFICATION, CORRECTIONS, ADDITIONS, DELETIONS."

I agree that Keala Pono Archaeological Consulting and/or PBR Hawaii and Associates, may use and release my identity, biographical information, and other interview information, for the purpose of including such information in a report to be made public, subject to my specific objections, to release as set forth below under the heading "OBJECTIONS TO RELEASE OF INTERVIEW MATERIALS."

CLARIFICATION, CORRECTIONS, ADDITIONS, DELETIONS:

OBJECTIONS TO RELEASE OF INTERVIEW MATERIALS:

_____

Participant Signature **Date**

_____

Print Name **Phone**

_____

Address

APPENDIX D: INTERVIEW WITH OLAN LEIMOMI FISHER

TALKING STORY WITH
OLAN LEIMOMI SAUCHAI FISHER (OF)
Oral History for the Mililani Project by Gina McGuire (GM)
For Keala Pono [October 13, 2025]

GM: I have 12 questions and if there's anything you don't want to answer that's totally fine, I'll just go through them. To start we just start with a little bit of background information, if you can state your name, where and when you were born and grew up?

OF: Okay, my name is Olan Leimomi Sauchai Morgan, and I'm Fisher because I got married.

GM: Congratulations!

OF: Thanks, that was already like, that was a while ago, but um, I was born and raised on Oʻahu. My parents lived and still live in Mililani, so that's where I like, I kind of spent half my time, but then I was also really raised a lot by my grandparents who lived in ʻAiea and then had a house in Pūpūkea on the North Shore. So now I currently live in my grandparents' former house in Pūpūkea.

GM: Wow. Do you want to share a little bit about your ʻohana background or moʻokūʻauhau?

OF: Oh, sure. My, so my mom is Native Hawaiian and Chinese. My dad is Caucasian, Swiss English from California. And so yeah, I was raised in a hapa way, half-half, kind of, in those cultures, I guess. And it's weird like, doing this kind of thing, I've done these before for others. It's interesting being on the other side of it.

GM: Yeah, for sure.

OF: Yeah, but so, my Hawaiian side, my grandparents, my grandma is from Oʻahu, Honouliuli, where she was born in ʻEwa side. And then my papa was, like, lived in town, Pōhaku Street, like in Kalihi. And we trace our family lineage, the furthest back that I was able to go, my grandma's side was Hāna, Maui and the furthest back on my papa's side was Kōloa, Kauaʻi.

GM: Oh wow.

OF: Yeah.

GM: Going from there, could you talk a little about your relationship to Mililani? I know you grew up partly there...

OF: Yeah, so, I'm 36 now. And growing up, it's kind of in my thesis, too. And the reason why I did my thesis about Mililani is that I definitely could tell the difference between, you know, spending a lot of time in ʻAiea, where my grandparents' house was, and then coming home to where my parents' house was. And just like that sense of place, you know, it felt like, it felt artificial, kind of, I guess, in Mililani, growing up. And I just didn't, I guess to be perfectly honest I didn't like it. I really, I really would always gravitate, I was always more with my grandparents. You know, I even say that I'm, a lot of times, I'll say I'm from ʻAiea as opposed to from Mililani. And it just felt fake and not like it was actually part of Hawaiʻi. Placed upon that ʻāina. But I will say, like, having a little more perspective, being older now, I have really come to appreciate it for the good that it does have too. Like the safety things, like sidewalks, like, you know, street lights. And it does, I mean, even if it's just a facade, it overall does feel like a safe, kind of friendly community, you know?

GM: Yeah.

OF: It's easy, like easier, to walk around than a lot of other places with no sidewalks and stuff like that, infrastructure like that. But yeah, I just, I was always missing that sense of place and I didn't really feel a lot of pride when I would talk about Mililani or like, people would be like, "Oh, well, what is that place known for?" You know, or "What's special about that place?" And the most I could say is like, we have rec centers with pools and like, the town center. You know? Which is like, and again, not to, I mean those are really great things, too, to have in the community. I mean, it's not like, I think it was part of my naivety. Like being naive of like, you know, now I appreciate it a lot more than I did when I was younger. Yeah, that was kind of my relationship with it for a really long time. And then what led me to focus my master's thesis in Hawaiian Studies about, like the history of that ʻāina before it became, before it even became called Mililani, this master planned community that it is today.

GM: That's awesome, finding that depth of meaning. And you work for— I found you through Kuaʻāina Ulu ʻAuamo?

OF: Yes, yeah.

GM: Okay.

OF: I work for KUA still.

GM: Okay. So, some of your research, or your experience, I don't know if you had a chance to look at the map that I sent, one of our questions is if you know of any traditional sites, that can be cultural sites or burials but also historic sites or structures that may have been or are in that project area?

OF: Yeah, I don't. I mean, I just saw the map, like 10 minutes ago, but not specifically in that area, that I really know of. I mean, a lot of it is in my thesis. I think I talked about, like, how a Hawaiian elder was brought in to give the street names of Mililani, when it was first being created. And a lot of them are, like, star names and constellations and, like, that we think correlates to, like, what we've seen in certain places. But... And then a little further down from the site area, it's in my thesis too, is what I've heard was, like, an entrance point to, like, the Kīpapa Gulch.

GM: Oh.

OF: Yeah, it's kind of more... No, it's actually, it's like a street away or kind of a, it's kind of far actually, from it. I mean, I guess, just it's all relative, but you can kind of see the geography level though, but yeah, it's kind of actually like me and my parents' house where there's like a valley, or not a valley, but like a little kind of ravine. That's kind of like the start of the Kīpapa Gulch. And then I was told by Aunty Elsie Ryder, actually, that that was like the point where a lot of the soldiers entered through the gulch. And then there was a big battle that happened in that gulch, which gave it partially the name Kīpapa.

GM: What is the name of the street that that's...

OF: Um, it's not a, there's no street name, but it's like, if you're going up... I think it's...

GM: I'm pulling out my map.

OF: If you're going up Lanikuhana Avenue, um, and then it's like, you can actually see it pretty well on Google if you're, you take a right from Kamehameha, and then you're going up and then you'll see, like, kind of a little ravine, like, there's trees lining it to the right, kind of directly across Nob Hill.

GM: Okay.

OF: Yeah.

GM: Okay.

OF: Yeah, but I think, like, more just generally, which my thesis kind of focuses on is, like, John Papa ʻĪʻī and how, you know, he was awarded the whole ahupuaʻa of Wahiawā in the Māhele. And then there's, like, some more maps. But a lot of the kuleana that we found, or that I found in my in my thesis, I think was more along the river, like in the gulch.

GM: Oh, that makes sense.

OF: Because it was, yeah, because they had the water there. Where a lot of what the development is on is like more the plains area. Yeah, but yeah, there's actually a map in my thesis on Page 113 was showing some of the original Land Commission awardees in Waipiʻo Uka, right in Mililani.

GM: I will pull that up. That's one of the things we have to document is the LCAs and kuleana.

OF: Oh, yeah, a lot of, I already, I went through what I could find back then. And hold the old maps. And there's names of folks, you know. But I'm trying to look at that map and compare it now to the project area.

GM: Let me pull up your thesis.

OF: Oh, I think it's kind of a little bit more mauka, though, than the project site. It was more like a mauka area. Yeah, with that map anyway.

GM: Yeah, we do overlay historical maps. So I'll double check. Yeah.

OF: I would really be interested to see this impact, this cultural impact assessment after, too. Yeah. That would be cool.

GM: Yeah, we can either mail you a printed copy at the end or just email you one, either.

OF: Oh, yeah. Either or would be great.

GM: My next question is if you're aware of any, I don't want to just limit to gathering practices, but any cultural practices in that area or surrounding area that we should know of?

OF: Yeah, not that I know of. I mean, and it's been developed for so long at this point. Yeah, not that I know of. I mean, I know, like, Kīpapa itself is, like, a Superfund site that I think just is being ignored, like, most of those. Yeah. It should be cleaned up and, like, given back to community at some point. Um... But, yeah, I haven't… Yeah, I recently, I mean I haven't heard of anyone, like, practicing recently. I know some people go into the gulch and... hike and things like that, but there's not really— I mean, the last time I was in there, too, was... there's not a lot of, like, native plants that I saw, that I've seen. But, yeah. I hate to say that because it's all… you don't want to, like... preclude that from happening in the future, you know?

GM: No, I mean, this might be like a naive question. I'm like trying to see how far away Kūkaniloko is from here.

OF: Oh, yeah. Yeah. It's not that far, though. I mean, even like Waikakalāua, the valley over, like Mililani Tech Park is close, like with the Oahualua stone. Yeah.

GM: Okay, so a lot of invasive plants where it used to be native?

OF: Yeah, I think it was all just native forest before. Yeah, nāhelehele. But then came pineapple, which, I mean, and sugar, which like wiped all that out before.

GM: Long, long histories of change over there. Are there any moʻolelo, mele, or oli that we should know of?

OF: Well, there's the Waipiʻo song that was, it's in the thesis too. Written by, um, Mekia Kealakai, or Irene ʻĪʻī, the daughter of John Papa ʻIʻī. Um, and it's specifically about Waipiʻo, Oʻahu. ʻCause there's a lot of, like, there's a lot more stuff about Waipiʻo on the Big Island, yeah, but yeah, I know that that song, was, like, a really special… and it talks about Kahalelaukoa, which was, like, what they called her. And that family, anytime it was played at any party, would stand up, and they would all, like, be very proud that that song was for them, for their land. And it talks about the Laulani breeze. The Laulani, Laulani is the wind of that area. Um, and, yeah, I think that's… besides other stories related to training, training of warriors close by to that area, like, in the Līhuʻe more kind of Schofield, too. And Kūkaniloko, but it's like kind of how, how far is too far? Like, yeah.

GM: I mean, yeah, we just say the surrounding area, but maybe within the ahupuaʻa?

OF: I would really try to reach out to the Lenchankos too, if you haven't already. Probably already did, yeah.

GM: I just spoke with them, but for a different project, but not for this one yet.

OF: Yeah. They always have so much to share. Uncle Tommy really shared a lot with me for this. And yeah, I kind of found— or he shared about Laʻilaʻi overall with Kūkaniloko being the center of the island. And oh, who else? Oh, Uncle John Topolinski, but I think he passed away. He was a long-time teacher, too, at Mililani High School.

GM: What was the last name?

OF: Topolinski, T-O-P-O-L-I-N-S-K-I. I think the only way I contacted with him was I had to go to the high school and, like, stalk him, like, outside one of his classes to contact him. Yeah. But I was able to talk to him. And then also, Maʻilikūkahi was known for being really connected to this area on Oʻahu. And he was actually born at Kūkaniloko.

GM: Oh, wow.

OF: And then, yeah, there's old newspaper articles talking about him. And yeah. The warriors that were trained, like, during his time in that area. And yeah, if you actually go to Page 48 in my thesis, too, there's a map that I did overlaying kind of— so, like, Punaluʻu Plains is, like, what a lot of Mililani was built on, I think that's what it's called. And then, but surrounding it, like right around it, there's a, oh, yeah, Heiau a ʻUmi which, it's supposedly in the Kīpapa Gulch. And we went searching for it. But there's just so much California grass. We didn't ever find anything. But yeah, if you check out that map, it's basically kind of some of the significant sites that I was able to find anyway. With the Oʻahu, Oʻahu Nui Stone, and Waikakalaua Stream, and then Heiau a ʻUmi. Um... And yeah, then, I mean, Kīpapa Gulch in itself, you could say, is a significant site too. Um, with the different, there's like two significant battles that took place there. And yeah, I mean, if you're going,

just looking at the whole of ahupuaʻa the more makai area is where John Papa ʻĪʻī's home was. And like, then you can even like, just I mean, and then it kind of goes to his other home in town, like, near Iolani Palace that was named Mililani. And you could say that Mililani Town is kind of, like, named after him and his family, and that home that they had there. And there's also that Mililani Street now. It's the street in town that is commemorating, like, their home that once stood there.

GM: Lots of history, yeah? Do you think, I know it's been, you know, developed for a while, but do you think that that area would affect a place of cultural significance or access to a place of cultural significance?

OF: So it's like right, it's basically on the high school property right now? Is that?

GM: Yeah, it's where their garden is, I believe.

OF: Oh, yeah, I see. Okay. Yeah, wait, let me. Oh yeah, it's kind of at that intersection, huh?

GM: There's like the tennis courts...

OF: Uh, no. Again, I don't, yeah, I don't, I don't know if there's any like kūpuna, actually. You should really talk to the Lenchankos ʻcause they live, like their family home is like right there in that loop.

GM: Okay.

OF: The head of the loop, I think. I mean, specifically about this.

GM: Yeah.

OF: That would be good, ʻcause you already know them. Mm-hmm. And then another one that might be good is, he's a Hawaiian language teacher at the high school now. Oh, I forget his name. He's very active. I did talk to him, too, for this. Oh, yeah, Kumu Kekoa Wong, I think. Just ʻcause they might know, like, I don't know, maybe they do gathering or something in that area. I just don't know, you know?

GM: That's helpful, thank you. Okay, and then, um, I only have three more questions, but, um, is there anything you would recommend them to do to lessen adverse effects on cultural resources or practices?

OF: What's really important always, yeah, for every project that you need, if you find iwi to have cultural monitors. So definitely, definitely. But I mean, I did hear some, like, there was a little bit of controversy out because some folks were kind of sad to be losing the garden. So I don't know if maybe part, like a part of the area could still be dedicated to native plants or I mean, I did actually try to push for that. Through my thesis, I think I even put potential ways that Mililani could better incorporate Hawaiian culture and history into its plan. And one was like to use more native plants and all the landscaping.

GM: Yeah.

OF: But that hasn't happened. I mean, I don't know, I feel like just it's not so much preserving it because we know that this whole area has already pretty much been bulldozed over, like, over and over again, you know, since sugar, pineapple, just developed Mililani. So it's like, bringing it back almost as much as you can. And like respectful and I think just like, you know, I think it's an

opportunity, and I guess that's, that is the main reason I was, like, I wanted to talk to you, or at least to get it out there somewhere. Yeah. If you're listening, that just, like, just because it's, a new development doesn't mean you just erase the whole identity of that place, and, um, especially, like, the Hawaiian culture. If there's no Hawaiians, then there's no Hawai'i. You know what I mean? Whether it's through the building names or just, like, the language parts or the plants parts, some of the design. I feel like just kind of giving it that sense of place more with, like, where it is, too, in Waipi'o, is really important. It's, so it's, yeah, it's not so much of, like, the protecting what's, I mean, it is. It's protecting what is, what's there beneath the, all of the change, that's been just erased over. And bringing it back and celebrating it again.

G: Yeah. Yeah. That is one of the questions is how the area has changed in the course of your lifetime or as you remember it.

OF: Oh, I mean, even in just my lifetime, well, one small change that I think I guess that is good, I guess, is in my thesis, I have, I kind of studied a little. Like, there used to be this, kind of pavilion in the center of the town center. And it had all these, like, plaques on it that were done by the elementary school students. And they were, like, had all kinds of, like, mistakes and misinformation, an inaccurate description of the battles and stuff that happened there. And, yeah, there's pictures. It's all in the first chapter, but... And then it also has, like, they had Miliani High School students and Hanalani students dream up, like, visions of the future. Like, it's really, it was pretty, like, terrifying, honestly.

GM: Oh, no.

OF: Yeah, they were, like, just buildings. Like it was, it's like in the Pages 26 to 28, has pictures of what these plaques looked like. And this was from 11 years ago even, you know what I mean? I'm sure, I don't even know what it would look like now, but I think it'd be not the same, I don't know. And then the Hanalani student plaque was, the vision of the future was like, was a huge pineapple at the center. Like, that's the furthest back that Hawaiian culture or Hawai'i, the meaning and origins go with pineapples, you know? Yeah. So, I'm glad that that was taken down.

GM: I'm looking at it.

OF: Yeah, I mean, I'm glad that it was taken down, but then what they replaced it with is just like, I would say maybe, I don't know, not worse, but, even more, like, ambiguous and just kind of, like, not— it doesn't even have any kind of anything, no history now, nothing. It's just, like, these, this fake grass turf in the middle of the town center and water features. I actually worked for Mililani Town Association for a very brief time, and, um... not that, I mean, it's just a different, it's just values, you know? … I remember I pitched even like, what about more native plants in landscaping and it's, you know, more appropriate for this land, really. And it was like, "No, we just want more color. It's too, like, yellow and green. We want to put more like rainbow colors all over." So I have noticed that too because they did do that. They've been planting more colorful plants all over. And I know they tried to take out the big, like pine trees. They don't like those just 'cause of, more 'cause of the infrastructure damage that they do. But really that's kind of the only small things that I've ever noticed in the area. And yeah, the garden was, is, has been a nice thing to see. And I know the Mililani High School has, like, their Mālama Mililani or something group. Yeah, I think Kumu Kekoa Wong is a part of that. And he will definitely have more to say for sure. 'Cause I know that they do like, I think they do like imus and they, I think they're, I even heard of them, some of them trying to steward some certain areas around the, around Mililani. And so, yeah, sorry, I don't even remember what the question was.

GM: Ah, changes. Changes.

OF: That's kind of it, I guess, besides, like, you know, they just built the new Straub doctor's office.

GM: No, but what I think I'm hearing is, like, the depth of history or the, like, understanding of the significance isn't hitting back to that, like, ka wā kahiko kind of era, and that's really what's needed to bring back or reminded or present in the design or the thinking or the landscaping is like, it's older than, it's older than the pineapple plantation. It's older than this.

OF: No, for sure. Yeah, exactly. And I mean, I mean, even if you just go back even to John Papa ʻĪʻī, Like, the.. and the ʻĪʻī found me, you know? Like, and I got to actually talk to a couple of them for my thesis. Yeah. I mean, yeah. Even if you just go to that, it's better than, at least, than just, like, pineapples. Or like, I think one of the kids said like, "Oh, it'll be known as like a restaurant city," or something. Just so, it's like that could be anywhere in the world, you know? Yeah. But what makes this place unique and special? And it's the history, it's the places and even just the name of Waipiʻo is so beautiful, you know, like, the curved water referencing all the rainbows that you can see in this area. And rainbows being, like, a physical manifestation of god and akua and your kūpuna. And then mililani, like, the name, meaning to look up and to be grateful and to praise the heavens and the gods. So it's, like, some of it's there and at least it's me, at least I really do like the street names. There's some, you know, like there's ʻĪʻī Vistas in Mililani Mauka. Like some certain areas. But yeah, I don't know. And isn't it a cool opportunity ʻcause there hasn't really been a bigger thing like this in the town area for a while.

GM: That's beautiful, the names. My last question is, you've kind of touched on this already with the garden, but any cultural or community concerns that might be had for the project area or within that ahupuaʻa?

OF: Yeah, I think I already, yeah, I think I already talked about it.

GM: Okay.

OF: Definitely trying to talk to Kekoa Wong and the Lenchankos more. I did talk to Aunty Elsie and she kind of was like, "Oh, I don't know how much more I can share than I already shared in your thesis." They're so like, they don't, you know, they're so humble and stuff.

GM: Yeah.

OF: But I'm pretty sure Kumo Kekoa would probably want to talk to you, especially with it being on the high school and overall though, I mean, I think this is a good project too. So I think that people would be more willing to talk to you because of that, you know?

GM: That's good to hear.

OF: Yeah, I mean, I don't know, I hope some kind of, there can be some kind of mitigation for the loss of like the garden area though, but I don't, I don't really know how, like, or if there's another area or something that the school could use for a garden, that would be cool. ʻCause that is really important too. But I don't know how much it's really utilized as it is anyway.

GM: That's a good recommendation, to find space for that. Okay, well those are all my questions unless there's anything you want to add?

OF: No, I think I talked your ear off. No, no. But yeah, just like, I felt like this was a cool opportunity to actually, like, exercise a little what I... yeah, my thesis is about. It's just, like, try to still have some

kind of recognition of the history of a place when building anything upon it, you know? So, that's my main message.

GM: Yeah, no, that's a good message.

OF: Yeah, and thanks for reaching out. Oh, no, thank you. I hope the project goes well.

APPENDIX E: INTERVIEW WITH JO-LIN LENCHANKO KALIMAPAU

TALKING STORY WITH
JO-LIN LENCHANKO KALIMAPAU (JK)
Oral History for the Mililani Project by Gina McGuire (GM)
For Keala Pono [November 4, 2025]

Ethnographer's note: instead of completing an oral interview, Aunty Jo-Lin opted to answer the interview questions in writing.

GM: To start please tell us about yourself...Name? Where/When you were born? Where you grew up? Where you went to school?

JK: Jo-Lin Lenchanko Kalimapau. Born May 31,1950 in Waikīkī. When I was 9 in 1959, we moved to Waipiʻo Acres, Wahiawā. It was the year the Hawaiʻi became the 50th State. Attended Kipapa Elementary School (there were three or four teachers' cottages on campus), Wahiawa Intermediate School and graduated from Leilehua High School in 1968. Leeward College for three semesters.

GM: Could you tell us about your ʻohana/family background?

JK: My mom is from Waipiʻo Valley, Moku O Keawe. She was part Hawaiian and part Mongolian. My dad was Ukrainian, Portuguese, Puerto Rican. There were six siblings. Both parents have ua hala. All siblings are still here in Hawaiʻi with their families. Two siblings still have homes in Waipiʻo Acres.

GM: What is your association to the subject property (family land, work place, etc.)?

JK: I presently live with my first born son in Mililani. The subject property, Mililani High School, is across the street from us.

GM: What are the ways you have acquired special knowledge of this area (from your ʻohana, personal research, specific sources)?

JL: Our ʻĀina Lenchanko lived in this area from 1959 before Mililani was developed in 1968. This area was our backyard and we rode our bikes and explored this ʻāina daily long before any development began. It was already acres and acres of pineapple fields.

GM: Do you know of any traditional sites or historically significant buildings which are or were located on the Property site--for example: cultural sites, archaeological sites, historic structures and/or burials? Please elaborate.

JL: Over the past 30 years the Hawaiian Civic Club of Wahiawā has participated in many site visits within the Wahiawa-Halemano, and Mililani lands through Escorted Access visits with Cultural Resources Military personnel. I do not know of any traditional sites in the area in discussion.

GM: Are you aware of any traditional gathering practices at the Property area and/or within the surrounding areas both past and ongoing?

JK: No.

GM: Do you think the proposed development would affect any place of cultural significance or access to a place of cultural significance? Please elaborate.

JK: No

GM: What could the Project do to lessen the adverse effects on any current cultural resources or practices in the area?

JK: Mai Maʻa Nei - Listen so you can see (pay attention). Should any earth disturbance reveal our past deep beneath the surface, procedures should be respected and ensure that all protocols are followed. All steps are to be taken to repatriate any discovered iwi kūpuna or artifacts revealed. Perhaps a Cultural Monitor, or two, should be assigned to this project?

GM: Could you share your manaʻo relevant to the Mililani, Waipiʻo area and the surrounding region (personal anecdotes, moʻolelo, mele, oli, place names, etc.)?

JK: Many battles were fought on the Central Plains of Oʻahu. Moʻolelo, mele, oli and place names have survived. I am not familiar with any of them in this area at this time. The pineapple industry destroyed the physical remains of any visible cultural sites in this and many areas of our ʻāina. However, depending how deep into the earth this project will go, it may reveal an unexpected and unknown past of this area.

GM: As far as you remember and your experiences, how has the area changed? Could you share how it was when you were young and how it's different now?

JK: The land here was primarily pineapple lands. All physical sites were already destroyed. We lived in Waipiʻo Valley and watched the development of Mililani Town. The only way to Honolulu or to Wahiawā was through a two lane Kamehameha Highway. The development of the H-2 Freeway took out more of our remaining traditional sites. H-2 Freeway was opened in October 1974.

GM: Are you aware of any other cultural concerns the community might have related to cultural practices within or in the vicinity of the Property site and its surrounding areas?

JK: No.

GM: Do you know of any other kūpuna, kamaʻāina, cultural/lineal descendants, or other knowledgeable people who might be willing to share their manaʻo of the Mililani, Waipiʻo area?

JK: No.

APPENDIX F: INTERVIEW WITH KELSIE KUNIYOSHI

TALKING STORY WITH
KELSIE KUNIYOSHI (KK)
Oral History for the Mililani Project by Gina McGuire (GM)
For Keala Pono [November 5, 2025]

GM: Okay, thank you for making time. To start could you tell me a little bit about yourself and where you grew up?

KK: So I was born and raised in Mililani Mauka, which is considered like the richer side, I guess you could say, but I wouldn't say that my parents were really rich. We were more middle class… Yeah, but now I live in Pālolo, just to be closer to UH, because I'm going to be there for a while. But the majority of my compulsory education, like I mentioned, was in Mililani. So I went to Hanalani Preschool which is like a private Christian preschool. And then I attended Mililani Mauka Elementary, and then Mililani Middle. and then Mililani High School. And then for all of my higher education, I chose to attend UH Mānoa.

GM: Wow, awesome— long time roots in Mililani. Do you want to share a little bit about your ʻohana background or moʻokūʻauhau, anything like that?

KK: So my mom's side is actually from Kailua. But before that, they were from Līhuʻe in Kauaʻi. And then my dad is from Mānana, I guess you could say Palisades area, but also Waipahu, actually, both of which— my parents met at UH, and they moved to Mililani after they got married. In terms of my moʻokūʻauhau, it's a little bit unclear because my tūtū was adopted. So I don't really know much about my familial history. I did get a DNA test, but it doesn't tell me anything about myself. But as far as I know, I'm, I think, fifth generation from immigrants on both sides. But I was born and raised in Oʻahu my whole life.

GM: Okay, thank you for sharing that. One of our questions is how you became familiar with the project area. [pulls up proposed project area map]

KK: Yeah. So the project site takes place at my alma mater. And then I was a student there from 2015 to 2019. And although I never took ag as a high schooler, I always admired my friends who did. And I wish I was involved in it. But honestly, I mean, this is something that I brought up to my advisors and stuff, too, when I was older. But I didn't know what the term NREM was or really what ag was when I was younger, because it was just something that you did, and I didn't know you could get paid for it. And it wasn't until I was actually graduated from my college that NREM was a field, and conservation and resource management was separate. But I did also teach part of my unit, because I was a master's of education in curriculum studies for the STEM squared program. And we were required to teach a unit. And since I didn't have— I'm not a formal educator— I'm an informal educator. Since I didn't have a classroom, I contacted Bonnie Parker and Mrs. Kuwahara, Jennifer Kuwahara, from the high school if I could teach my unit on kalo, or more specifically, Hāloanakalaukapalili, who is kalo to their ag classes, and they said yes. And I've done a lot of workdays, too, with them with Hui Mālama, I think it's called. And I still try to actively be involved with them, but I did teach my unit there as part of my completion of my graduate program.

GM: That's awesome. That's awesome. So you guys were... you grew kalo, or?

KK: They already had, they already have a lot of stuff growing there. And holistically, my unit was only, for the purposes of the program, our units are only two weeks.

GM: Oh, okay.

KK: And so it's not really enough time to do a whole cycle. Even like a semester isn't enough. And I mentioned that to them, but I gave them the materials and like, ideally, like, they continue to do this, and then the students will teach the next set of students how to grow kalo. But there was a lot of restrictions, obviously, and time block periods are different per school. And it was a weird week, because it was ACT week. So it was, yeah, it was a difficult integration, I guess you could say.

GM: Yeah, that's cool, though. I've never worked with high schoolers, so I feel like that would be challenging.

KK: I mean, no, it was fun. I'm very grateful. And if they didn't have a place on campus, right next to the classroom, in my opinion, my unit would not have been anywhere as effective.

GM: Okay.

KK: Because I just took them out. You know what I mean? I'm like, this is the kalo. This is its, look at this one. It's different. You can see the colors and the shapes. And I started their, like, journals for them.

GM: That sounds like the ideal classroom. I'm going to kind of jump forward in questions because I'm thinking about Hāloa now, but, are there any moʻolelo or mele, oli, or place names from specific to that area or from the wider Mililani area that we should know of?

KK: Place names that immediately come to mind are Waiāhole Ditch, Oʻahu Nui, Kūkaniloko. A lot of people don't realize that Kūkaniloko isn't just like a small spot in Wahiawā. It's pretty big. And in central Oʻahu, it encompasses the entire Mililani region, from what I understand, according to Uncle Tom Lenchanko. And arguably, Kūkaniloko is one of the most important spots on Oʻahu, because that's where chiefs are born. Even Kamehameha attempted to bring his wife here. But I don't know, it didn't work out or something.

But other place names are like Kīpapa. That's a really pretty, probably the most famous moʻolelo that took place in Mililani. There were two battles of Kīpapa. Sometimes it gets conflated as one, but it's two. And the bigger one of the story is between Big Island, Maui chiefs. There's a couple of them that teamed up together and kind of tried to ransack, I guess you could say, or surprise Maʻilikūkahi. But Maʻilikūkahi, an Oʻahu chief, he was able to cut off and successfully defend it at Kīpapa. And it's not just the stream, but it's kind of more by Kīpapa Drive and the elementary school, too. So it got that name because, from what I understand, the warriors' bodies paved the way of the gulch, so it means "placed prone."

And then there's two heiau that are not really functional, because that's where the Ted Makalena Golf Course is, which is Heiau o Umi and Keahumoa. But they're, like, companion structures, but like I said, they're not really functional. Because that's where the... and I don't know of anybody that's stewarding them. I don't think anybody's going to give up the golf course. But also in that area is Loko ʻEo, which was the former fishpond. Because Waipiʻo is in a broader region of Puʻuloa that is very concentrated with lots of fishponds.

GM: Oh, I didn't know that. That's awesome. It's always, I think, surprising. I've had a couple of projects in Wahiawā, Mililani, like how, I mean, how different or changed it is, but how much is there?

KK: Yeah, it's really, I mean, at the end of the day, it's like a planned community, you know, and like a lot of people or a lot of my classmates think that Mililani is an ahupuaʻa. They don't know. It's just like, I don't think they really teach about the development. That's why, or at least when I

was in school, from the public school system, I don't recall them teaching about the history of Mililani. Like we did learn what ahupuaʻa were, but not in the context of our own ahupuaʻa. Like the students there wouldn't know what ahupuaʻa they live in, unfortunately. And to be fair, a lot of the resources that would be traditionally accessed, like all the kai resources are in Pearl Harbor, so it's not really readily accessed. And when they go on field trips, like I've gone on field trips with them too as an adult, and they'll go all the way to Keʻehi, or all the way to Kahana, you know? There's nothing for the students to access that's within their own, even moku, basically, which is kind of sad to me.

And even up mauka, there was the fires recently, so I think there's more restricted access, but they have military training up there. And there's an area that me and my friends and sometimes my classmates would go to, which I don't know what the real name of it is. It might be wait, [inaudible name] or something? It's a creek. But that's what we call it. It's like in some residential area, just behind some houses. But they do military training there and you can definitely, like we've gone there to swim and catch fish and stuff, but you can definitely hear them shooting their guns.

GM: Can you say the name one more time?

KK: I think it might be Waikalalaua. I can send you. I tried to prepare some of my answers to these questions so that it's more thought out because speaking it is hard sometimes or remembering everything.

GM: Yeah, no worries.

KK: But something else about place names that's pretty interesting in Mililani is that all of the streets are named after navigational terms or star terms. But I haven't really found too much or learned too much about the significance of navigation in Mililani. And I assume that it has to do with maybe our heiau not being functional since heiau are places to observe time. But yeah, certainly, they got those names for a reason. And in the development of the town, I'm sure they consulted somebody that was Hawaiian and knew these names. But the place I grew up on was Alenale, which means "clear."

GM: That's a cool name. So I know you mentioned you didn't do ag in high school, but your friends did. But I don't know if you want to talk a little bit more about some of the things they're growing there, or gathering growing practices in that area. And that can be traditional, what you think would have been there, or yeah, more modern, what's happening in that project area.

KK: Yeah, so Mililani is in Waipiʻo, which from, like, the land claim awards, I mean, there could be more, but I think there are like about like 100 to 200, maybe awards of that, of loʻi or even just kula lands in general. And from my understanding, the Māhele land claim award process was pretty rigorous. You had to have, like, witnesses and everything. So 100 to 200 loʻi is pretty extensive. And it was originally like 35,000 acres of ag land. And they were kula lands because, well, further down, there were fishponds and stuff. But where Mililani is, is kind of landmarked. So in that sense, those are mostly kula lands, like dry land. And you'd find maiʻa, kō, ʻuala, dryland, kalo, stuff like that. But I have seen old pictures where you can see koa trees and kukui trees, and ʻiliahi, and stuff like that, all of which can be used for medicine, and construction, and highly valued stuff. So it was a pretty prosperous time, especially when Maʻilikūkahi was in reign.

And most of it, I think, belonged to the ʻĪʻī family, from Ioane Papa ʻĪʻī, most of that area. And then Castle and Cook acquired it. And it was sold to Hawaiian Pineapple. And that was like the more, what Mililani is contemporarily known for is pineapple farming. But it was a really small portion of the history here, actually. And yeah, now it's mostly residential. But there is other contemporary things that's in the area is like albizia, which the Albizia Project, it's invasive. But the Albizia Project

does source from Mililani to make their construction materials and stuff. And then most of the current gathering, I would say, because MTA has such tight restrictions, the Town Association, a lot of it does take place at the high school because, like for me, my backyard is mainly cement, so we can't plant anything in it. And everything is in pots, which obviously isn't ideal.

And then I also tried to start a community garden in Mililani, but the Town Association said it's banned in the governing laws of Mililani. So therefore, there's just so many hurdles. There's very reduced ag land as is, and it's constantly under threat. Um, like we have Mililani Ag Park, but that's like where they do like solar stuff too. And it's like gated and all that. And then they have, some of it was up for lease too when they wanted to build an emergency campus. So, but anyways, yeah, more of the contemporary stuff takes place within schools, like the middle school has a pretty extensive area too, but I wouldn't say all of it is traditional. You know, like they grow stuff like, not that lettuce isn't valuable.

GM: Yeah. Yeah.

KK: But it's just like, it's not like necessarily Hawaiian crops, but they do have like ʻulu and coconuts at the high school and a kalo library, but not all of it is, you know, traditional.

GM: When you were helping out with doing the Hāloa lesson, what were they primarily growing at that garden?

KK: Well, so it's pretty interesting because they have a section of it that is, we have a partnership with the Waiʻanae Mountain Watershed Project. So there's a section of it that's a shade house. And that's like a little nursery where they grow all kinds of native stuff which is really awesome because, and then they get to go on the field trips and then outplant it sometimes. But they have, have sugar cane. I know the ag students, when they take that pathway, they get plots of land. And you can grow whatever you want. A lot of them choose to grow ornamentals, like sunflowers and stuff like that. But I know for a fact that they have two coconut trees, and then they have kukui all lining the back, which they used when they have their imu at the end. They use kukui to cook. They have kalo, like, kind of in the back, lining the side. They have squash. They have lots of good food stuff there, actually. Yeah.

GM: Oh, that's awesome.

KK: Yeah.

GM: And they do an imu every year?

KK: They do. I usually get invited to it, and it's pretty awesome to see the students do that kind of stuff. And they always have something innovative going on, like they have a robotic planting thing now, which is pretty cool. And I think some of the stuff that they grow, because Mililani is one of the schools that does farm-to-school initiatives or farm-to-table, I think that some of the stuff that they grow on there gets put into the lunches.

GM: That's super cool. So other than traditional gathering practices, are you aware of any cultural sites or potential for iwi or artifacts, historic structures that might be in that area?

KK: There's definitely iwi, because the Battle of Kīpapa was, sounded pretty intense. So if everybody, or like what that moʻolelo says is, like, the bodies are like lining the ditch. There's probably bones all over, so I'm not surprised. And I know even on old maps, you can see that there are labeled tombs on the golf course and stuff, because that's where Loko ʻEo was from people from

the ʻĪʻī family. And there's definitely, well, I was wrong about, I called it Keahumoa Heiau, by the way, it's Moaʻula, I'm sorry. I knew it was a chicken thing. Yeah. I think, yeah, that's the main one I can think of is like the Battle of Kīpapa with the bones lining the gulch and downwards. Because even by Nob Hill, that's what is mentioned. That's what we call it, Nob Hill. But that's mentioned in the story too, and that's pretty close to the high school. So that area would probably have bones too. And then wherever people from the ʻĪʻī family chose to bury.

GM: Okay, that's really good to know. Do you think this development would impact access to a place of cultural significance or affect a place of cultural significance?

KK: I mean, the access to the cultural significance is already pretty limited as it is. Because like what I mentioned, like Mililani being landlocked and then like the traditional kai resources are completely, well, filled in for the golf course, but unaccessible because where it is, is like the site of a Superfund. And there are, like, some teachers there that I would say are really awesome and are actively trying to teach the students the cultural side. There's just the two that would be there and like that, like that is what is ideal, like in an ideal world that if we were to show them the cultural sites, we just take them there, but there's no way to really do that right now.

And like I said, even up mauka, like it's, it's limited because of military and anyways, but… I've been to a couple of those meetings and there are two proposed sites one is at that ag space and the other would be kind of by the other side of the campus but it doesn't really, it just displaces, if it were to be on the ag space, it would displace one of the last remaining ag spaces in Mililani. And when I talked to the, when I went to the community meetings and I asked, why was that site chosen? Because the answer that I got, basically, was that when they drove by, they saw undeveloped land. And it was kind of frustrating because I know that if the football field was there, or if it was the band program, or if it was any other like building or whatever you want to call it, even the baseball field or like something, they wouldn't see it as undeveloped. And they just can't see with their own eyes that there's like a huge ʻulu tree there, there's coconut trees, there's a kalo library, there's a shade house, there's a mural with all the place names that the students helped to put together. Like that's just kind of sad to me. Yeah.

And It's pretty interesting because in reading and doing my own research about Mililani, especially from Leimomi Morgan's thesis, something that was striking was that at the time of her thesis, which was in 2014, students were asked to see what they see as key symbols of Mililani. And high schoolers, not even young students, high schoolers said that they saw a pineapple and a clock tower as key symbols of Mililani, which are not cultural at all. And even sadder, the way that they envision Mililani in the future is they see it as a restaurant town, but they can't acknowledge where that food would come from. And they see it as like, I don't know. It was just kind of, I just feel like the cultural education there is pretty limited as is, and there's a very low native Hawaiian population anyways. And when we continue to remove these spaces, and I really get the need for teacher housing and the whole thing about that bill. Both my parents are teachers, actually, in the formal DOE education system. So I totally get it. And I totally get that the teacher salary is not good. But we also don't have to compromise student programs to make way for teachers, in my opinion.

GM: That kind of feeds into kind of, any concerns or, that you've heard about this project or about the area that we need to be aware of?

KK: Yeah, because even like the, from what I understand, Murphy kind of talked to me on the side and was like, "Oh, it's not going to be on the ag land." That program isn't under threat, but he's definitely lying because the ag program almost got cut when I was in high school. That's what my friend said, like the FFA program and stuff. So it has been under threat before, and I don't think that

we're above it now. But even the other proposed space, the Site B, from what I understand, they would have to compromise the dance program or other portions of the campus.

Kind of what I was saying, too, about how some people grow their food on campus. The old teachers let me come and pick ti leaves when I need to make lei, or they definitely let me grow stuff there if I need to. I don't live there now, so I don't go as often. But I know for a fact that some students grow their own food and stuff there. And if we're going to build there, then they need to make sure that their students are still offered areas that they can grow their stuff. And I know surely it's going to be reduced in size, which you can do vertical gardening or just other things to at least provide opportunities for students. Because people don't want to admit it, but food insecurity is bigger than we think in Mililani. And I definitely had a lot of friends in high school working jobs to pay for siblings' school lunches and stuff. And it's not free, it's only increased in price. And sometimes that's some people's only meals. So by offering students a place on campus to grow their food, that's really important. And sometimes even if, I know the project thing said they would replace the greenhouse, and they would replace all this, and offer another ag space. But the thing is that most plants do not grow within a day. It takes a lot of time and a lot of care, and they can go under shock. A lot of the healthy plants might not be as easily transplanted as we like to think.

GM: Yeah. Yeah, that's for sure. I'll bring up the project area that I have. It says Project B. Mililani Site B. Yeah, so it's right next to the tennis courts.

KK: Yeah. Yeah, that's what I, like, from the last meeting, that's what I gathered that it wouldn't be at the original Site A. It's going to be at Site B. But I think, like I said, they're still compromising a dance building, which I also took dance as an elective. So it's like, that dance program is already very limited as is. You know, like, I loved my teacher, but she, it's just very small, so. I just don't understand why we have to compromise student programs for teacher housing, but hopefully they have plans to move the dance building somewhere or offer a different space for it.

GM: It's, I mean, you've already given a couple suggestions about, you know, providing space to grow food and/or the dance building, but is there anything you'd like to see them explicitly do to minimize the harm that they're causing or adverse effects on cultural resources specifically?

KK: Honestly, the best way to lessen the adverse effects is to make the ag program bigger. So it's kind of nice if it seems like they're adding another space in addition to the existing space. And if they must build, because I know it's by law, with the whole teacher housing thing that the governor signed. I just think that no matter what, the least they could do is preserve as much of the space as they can. And I think the bigger issue that I see with even gardens being so close to teacher housing is like, because students grow, or me who wants to access it in my off time to go pick leaves or whatever, since actual teachers will live there, will students be able to actually access these spaces in their off time, like outside of school hours or on the weekends when there's not supervision and stuff? Because I mean, I'm an adult. Certainly, I want to have a level of security and stuff. And it's a really fine line, especially literally with boundaries between high school students and teachers. But I really still believe in the students still having access to grow stuff because it's so strict in Mililani. My family got cited for having papaya trees and ferns, you know what I mean? So we have to cut it down and...

GM: Wow.

KK: You can only grow grass, which, in your planter strip, and they'll get you for everything. So it's just, because things are just so strict as is, the smallest amount of ag spaces that we have need to be preserved.

GM: Yeah. Wow. I only have two more questions. Can you say a little about how the area has changed as you grew up?

KK: Yeah. So much. Yeah. I mean, are you talking about Mililani in general or the high school?

GM: Both. Both.

KK: Yeah. Well, I think the high school, like— I know I'm not the only one who feels this way, but I feel like it looks like a jail now because they have, like, a fence wrapping around the, like the entire thing. And I don't know if that's because kids were ditching class too much or something, but I just feel like it looks really intimidating and not really welcoming. Yeah, but I have noticed more houses, people in Mililani now, which is interesting. Not that that's bad or anything, it's just, it's just interesting. And there's definitely been, like, a lot of the shops and stuff that we see have definitely, like some of the smaller mom and pop shops, like I know Sanrio just went out of business, or no, not Sanrio, Morning Glory just went out of business, which is definitely a favorite store for me and my friends when we were younger, but they're getting kind of out-competed by other bigger businesses.

GM: Yeah, a lot of that happening. And then my last question is just if there's anybody else that you recommend I talk story to for this one?

KK: Well, I don't know if you've interviewed already, but I'm going to assume that, or I would think Leimomi Morgan is really good. And I'm going to assume Mrs. Kuwohara referred me or something. Or I don't know. She would be a good one, because she actually is a teacher there, but I don't want to jeopardize her position, to be fair, as a teacher. But lineal descendants of, like, the ʻĪʻī family or, I know, like, my kumu hula when I was in class there was Kekoa Wong, and his kumu is Kahaʻi Topolinski. And at the middle school, it's Noelani Dabis-Tom and her sister, Leinani Dabis-Tom. These are my kumu. And I would say they did make an effort to teach us some stuff. And in elementary school, it was Makua Carnation. Makua Carnation Damon. She did teach me a mele, which I don't know, it's a contemporary mele because she composed it, but there definitely is plenty about Waipiʻo.

GM: Okay, I've stayed away from interviewing people who are currently teachers but...

KK: Yeah. No, I don't want to jeopardize their positions, obviously.

GM: Okay, well, those are all my questions. Unless there's anything you want to add that I didn't ask?

KK: I also prepared, on the document you sent me, some more thorough answers so I can send that to you.

GM: Okay, thank you.

Kelsie provided additional manaʻo below:

To start please tell us about yourself…Name? Where/When you were born? Where you grew up? Where you went to school?

a. Kelsie Pīkake Kuniyoshi. Born and raised in Mililani Mauka, but now I live in Pālolo to be closer to UHM.

b. The vast majority of my compulsory education was in Mililani. I attended Hanalani Preschool, Mililani Mauka Elementary, Mililani Middle School, and Mililani High School. For all higher education, undergraduate to PhD, I will have attended UHM.

Could you tell us about your ʻohana/family background?

c. My mom is from Kailua, but her ʻohana is originally from Līhuʻe (Kauaʻi). My dad is from Mānana (Palisades), but is ʻohana also lived in Waipahu.

What is your association to the subject property (family land, work place, etc.)?

d. The project site takes place at my Alma Mater, MHS. I was a student here from 2015-2019.

What are the ways you have acquired special knowledge of this area (from your ʻohana, personal research, specific sources)?

e. Most of my knowledge of this area had to come from my own research and pilina building with the broader community. They don't really teach the history of Mililani in school (at least from what I can remember and during my time at school). A lot of students in Mililani actually think Mililani is an ahupuaʻa or an ʻili, which it is not. The ahupuaʻa is Waipiʻo. My knowledge of the broader Waipiʻo region comes from volunteering at community workdays, like with Ioane and Kahea from ʻĀina Kaiāulu at Kūkaniloko, Uncle Tom Lenchanko, etc. More specific stuff came from Leimomi Morgan's thesis.

Do you know of any traditional sites or historically significant buildings which are or were located on the Property site--for example: cultural sites, archaeological sites, historic structures and/or burials?

- Well just in general, Mililani is located in a region known as Kūkaniloko. Lots of people think the region is limited to just a small area within Wahiawā, which is not true. The entire Mililani region is located in Kūkaniloko, which is arguably one of the most important places of Oʻahu. It is central Oʻahu, the piko of Oʻahu, where aliʻi were born.
- Additionally, there are 2 heiau, companion structures, in Mililani, that are now covered up by the Ted Makalena golf course. These are known as Moaʻula Heiau and Heiau o ʻUmi, which is memorialized in Sites of Oʻahu. I don't think anyone is stewarding them, because how can you, when the golf course is there. There were 2 famous battles in Kīpapa, which are often conflated as one. Perhaps the more famous one is between Hilo and Punaluʻu, Hawaiʻi island aliʻi, and Luakoʻa, a Maui aliʻi, who waged war on Māʻilikūkahi. Māʻilikūkahi's troops cut off the Hawaiʻi island Maui island guys, literally, and the corpses lined Kīpapa gulch, which is how the area got its name. Again, most people think Kīpapa only refers to the gulch, but it refers to the broader area of Kīpapa Drive and by the elementary school. The other battle was with Kahikulani and Halemano.

- I'd have to look up more specifics on the exact site for burials, but I wouldn't be surprised if there were iwi. It sounded like these battles here were pretty intense.

Are you aware of any traditional gathering practices at the property area and/or within the surrounding areas both past and ongoing?

- Mililani is located in Waipiʻo, but I think other parts might overlap with Waipahū. These areas were agricultural. These were kula lands, you'd find maiʻa, kō, kalo, ʻuala, etc. here. There were koa trees, ʻIliahi, kukui. All of these plants can be used for food, construction, medicine, etc.
- In fact, Mililani was built on 3,500 acres of former ag lands owned by Castle and Cooke. Before them, it belonged to the family of Ioane Papa ʻĪʻī. At one point, these lands were sold to Hawaiian Pineapple, with the understanding it would still be ag land. Pineapples were grown here for a while, but then Castle and Cooke saw the pineapple industry in decline and chose to develop a community here as this is more profitable.
- Ongoing, Mililani is one of several source areas for Albizia, which is an invasive tree, and is now repurposed for construction. Most of the gathering currently takes place at the high school's agricultural area, or within school gardens. Residents can't really grow too many things because Mililani has really strict rules. My family got cited for growing papayas and things in our front yard. Because the majority of our backyard is cement, everything is in pots, which of course isn't ideal for growing plants. According to the Mililani Town Association, community gardens are banned in their bylaws. I can imagine this is to keep the town "aesthetic." There is agriculture going on at Mililani agricultural park, but this is lettuce, kalo, ʻuala, vanilla, and māmaki as far as I Know. There's also solar panels here, and I think this is part of a bigger project within CTAHR.
- There is a labeled Tomb on the Makalena golf course, someone from the ʻĪʻī family, which is where Loko ʻEo was.

Do you think the proposed development would affect any place of cultural significance or access to a place of cultural significance? Please elaborate.

- Access to culture here is already displaced and affected. While there are some teachers actively working to educate their students on the cultural side of Mililani, I find it kind of sad that we don't have a place in Mililani, like our two heiau, that is close to the student's home for them. The kai resources we would have traditionally accessed are located in Puʻuloa (Pearl Harbor), which is the site of military activity, contamination, and a Superfund site. Even up ma uka, they do military training here, there is an area that people call the "Creek." We'd go there to swim, hike, and fish. But sometimes you can hear the military drills, their guns and stuff and see remnants of it.
- What I'm trying to say is that if this housing project takes place on the ag space, it would displace one of the last remaining educational agricultural spaces in Mililani. I really think developers just see it as undeveloped land, and they fail to see a tall ʻulu

tree, sugarcane, coconut trees, a shade house, a mural, and all the hands that went into making that space what it is. I'm pretty sure some of the food that the school uses in farm to school initiatives comes from this garden. Waste food from the café gets composted at this area too. When I taught my unit plan on kalo here as a requirement of my master's program, I was able to take the students out to the māla, and show them Hāloa. They have lots of kalo cultivars there, students started kilo journals from the mākua kalo here, and the next year will be observing the ʻohā. This kind of stuff, even if the garden is relocated somewhere else on campus, doesn't grow in a day. Try ask the students what they know about agriculture here in Mililani, most, including myself as a high schooler, probably couldn't give a good answer.

- Something interesting that was mentioned in Leimomi's thesis was that students of MHS and Hanalani, when asked what they saw as symbols of Mililani, identified a pineapple and a clock tower. When asked what they envision of Mililani in the future, they say they see it as a restaurant town. Where is the food going to come from if we continue to destroy our agricultural spaces? Some of the ag land was just under threat to build an Emergency Campus. Ag is just simply not as valued in Mililani, but people like to pretend it is.

What could the Project do to lessen the adverse effects on any current cultural resources or practices in the area?

- Both my parents are educators. I really, really recognize the perils of housing security in Hawaiʻi, and low wages for teachers. How this teacher housing project started as a requirement of a bill that passed. I get that. But the thing is, and my point is that developers are always going to see it as undeveloped land, even if the cultural resources are there, right in front of their faces. They wouldn't choose to develop here if this was where the football field was, or the band building, or the English department. Obviously, I am not an architect and I understand that this area was chosen for accessibility reasons and cost lots of factors. But this development cannot take place where the ag program is. From the meetings I attended, it sounded like no matter what, the school would be compromising student programs. The other proposed site is where the dance building is located, where no offense, as someone who did take dance as an elective, again, the program wasn't very robust. I loved the teacher, but it is quite a small program.
- The best way to lessen the adverse effects is to just not build there, and honestly, make the ag program bigger. But if they MUST build there, the bare minimum they could do is preserve as much of the existing garden as they can and implement like vertical gardening or space saving stuff, so ag can still take place there. The bigger issue I see with this is that if students will be able to visit this during class or club time or their free time since actual teachers will live there. The ag teachers let me go there to pick ti leaves if I need. I know they let some students grow some of their own food there if interested. If they MUST build here, developers need to still offer space to students, alumni, staff, who use this space to grow food, especially considering the existing restrictions in Mililani as is.

Could you share your manaʻo relevant to the Mililani, Waipiʻo area and the surrounding region (personal anecdotes, moʼolelo, mele, oli, place names, etc.)?

- Some immediate place names that I haven't mentioned come to mind are Waiāhole Ditch, Oʻahunui, Waikakalāua, Laʻilaʻi, Kanoenoe,
- There might be more, but Land Claim Awards indicate this area had between 100–200 loʻi or māla. Either way it was cultivated.

APPENDIX G: WRITTEN STATEMENT FROM GIOVANNI KAANEHE

WRITTEN STATEMENT FROM
GIOVANNI KAANEHE
Oral History for the Mililani Project
[February 25, 2026]

Aloha nui,

Here I will speak on the importance of the areas around the current Mililani Highschool Teacher Workforce Housing Project. I will summarize the history and continued existence of native plants, canoe plants, cultural sites, place names, wind names, and wars in the Waipio Uka area that encompasses the project. And finally, I will mention historical accounts and documentation that may be of interest for the specific proposed construction area.

My name is Giovanni Kaanehe. Both sides of my family have lived in Mililani for three generations. Prior to my family living in the ahupuaa of Waipio on Oahu, my ancestors lived in the ahupuaa of Waipio on Hawaii island, farming kalo throughout the 1800s. I am of Hawaiian descent and can trace my lineage back to Haloanakalaukapalili.

I want this to be added to the cultural assessment since majority of this information I am providing to you was not mentioned in your original assessment. You may contact me for any future Cultural Impact Assessment interviews or comments on the ahupuaa of Waipio and ili aina of Mililani.

Native plants

Notable native plants that lived in the area are Koa and Ohia Lehua as notated in 1800s maps of the Waipio Ahupuaa. Many species of Ohia such as Lehua, Ha, Ahihi, Mamo etc. are still found along the border of Mililani and Waikakalaua. Mamaki was also a very notable native in Waipio. “From Waipi’o in Ewa and from some lands of Hawaii came tapas made of Mamaki bark and ‘ouholowai tapas from Olaa and soforth...” (Sites of Oahu, John Ii) Lastly, ‘iliahi (Hawaiian Sandalwood) was previously present in the area until the trade ravaged its population (Sterling and Summers 1978:89).

Canoe Plants (Hawaiian Cultivars)

The people of Waipio had specific cultivar varieties tailored to the area. A rare variety of ancient Hawaiian maia (banana) previously mentioned by Kamakau in the 1800s was discovered by K.E.Y. Hosaka in 1932 in Kīpapa Gulch bordering Mililani. The variety was called Iholena Loha, and it was the last time the variety was ever seen. Maia were typically grown along the banks of lo’i, which are still abundant in Kipapa Gulch. The kalo that was growing in the lo’i was most likely the Kāī family of kalo (kāī kea, kāī ‘ala, kāī uliuli), which were famous in the Ewa moku for their attractive ‘ala or fragrance. There is also an ‘ili ‘āina called Kahauone in Waipi’o Uka whose ‘awa clumps were favored by Kakuhihewa. Unfortunately, I have yet to identify what ‘awa variety it is.

Although not explicitly stated for the heiau in Waipio, Oahu, but for the heiau in Waipio, Hawaii island, which carries the same name “Moa’ula”, two important canoe plants are mentioned. Niu Hiwa is believed to grow around the heiau as with all Luakini heiau. A variety of red ‘ape (‘ape ula) was also used as hookupu by Kamehameha the Great for the heiau. It is possible that the heiau between these two ahupuaa mirror each other and must be further researched.

Cultural Sites

To continue on with the two companion heiau in Kipapa Gulch, as mentioned by McAllister in 1933 (Site 130&131). These structures are right off the main apex of the path through Kipapa Gulch on

Army land, although they have not been maintained since the time of John Papa Ii. Their names are Moa'ula and Heiau o Umi, whose remnants can still be seen. Skye Kolealani Razon-Olds writes this about Kipapa "The remaining fugitives were hunted down and slain throughout the 'Ewa Moku. Afterward, the corpses were taken to multiple Heiau within the valley and offered to the gods. There is even a moolelo about the bodies disappearing after lightning struck the Heiau. They called it the tongue of god." Suggesting Kīpapa's heiaus were Luakini, involving human sacrifice. I've seen the exact same story written for the Moa'ula heiau on Big Island in More Hawaiian Folk Tales by Thomas G Thrum on page 274.

More cultural sites such as terrace walls, petroglyphs, rock shelters, ancient trails, maika fields, and housing platforms, are documented around the area in John Papa Ii's Trails of Leeward Oahu. Pictures of these can be seen in Skye Kolealani Razon-Olds blog on Kipapa.

Place Names

Punalu'u - The ili aina that we know today as Mililani, was originally named after the ali'i that died on this plain in the battle of Kīpapa. It was later renamed to Mililani by Castle&Cooke. It is believed that John Papa I'i coined the name Mililani for the area, although I've seen in his writings that he uses the old name "Punalu'u." John Papa I'i taught at the same school and became friends with Amos Star Cooke and his wife, who later bought John Papa I'i's land and founded Castle&Cooke.

Kea'akukui Gulch - Translating to "the Kukui rootlet" this is an old name that specifies the gulch that is above the Kipapa Junction but below the Waikakalaua and Kawaieli junction boarding Mililani. Most maps just label these two gulches as Waikakalaua. Waikakalaua - Translating to "water rough in the rain" this gulch starts at the Kawaieli junction and continues all the way up to the Waipio ahupuaa marker "Puu Kaaumakua." This gulch is most notably spoken of in the Oahunui story and the Kīpapa Gulch wars.

Kīpapa Gulch - Kīpapa has three translations. Mary Kawena Pukui writes that it meant "to place prone" or also "to pave." Referring to the dead bodies after the war. If you farm kalo, you know that kīpapa also refers to a style of retaining wall used to prevent erosion in your lo'i. All these definitions could be right as the bodies were probably placed prone, paving the gulch, and stacked like rock walls.

Wind Names

Laulani - as heard in the Waipi'o song by Mekia Kealakai Kanoenoe - as written in the Star Bulletin announcing the Mililani Mauka community breaking ground. The article states the intended meaning of the names Castle&Cooke gave throughout Mililani, such as I'i vistas, Kanoenoe, Kumelewai court, etc. Kanoenoe is noted as the wind name of the area.

Wars

Two wars are recorded as taking place in the areas of Waipio, specifically Punaluu, Waikakalaua, and Kipapa. Here are the direct sources:

Kahikulani was a war leader of Puna, Hawaii. He came to battle against the chief Halemano whose cannibal meat dish became famous. He went inland and up to the very top of the mountain. He looked down on Kipapa stream where his warriors fought those of chief Halemano in a great battle. The sun had not set when all of Halemano's warriors were destroyed. The land and stream of Kipapa was reddened with the blood shed in this battle. That was the first time that the public highway

became peaceful in that period that is gone. Kakikulani was a man of power in Puna, Hawaii. (Sterling and Summers 1978:20)

I have before referred to the expedition by some Hawaii chiefs, Hilo-a-Lakapu, Hilo- a-Hilo-Kapuhi, and Punaluu, joined by Luakoa of Maui, which invaded Oahu during the reign of Mailikukahi. It cannot be considered as a war between the two islands, but rather as a raid by some restless and turbulent Hawaii chiefs.... The invading force landed at first at Waikiki, but for reasons not stated in the legend, altered their mind, and proceeded up the Ewa lagoon and marched inland. At Waikakalaua they met Mailikukahi with his forces, and a sanguinary battle ensued. The fight continued from there to the Kīpapa gulch. The invaders were thoroughly defeated, and the gulch is said to have been literally paved with the corpses of the slain, and received its name "Kīpapa," from this circumstance. Punaluu was slain on the plain which bears his

name, the fugitives were pursued as far as Waimano, and the head of Hilo was cut off and carried in triumph to Honouliuli, and stuck up at a place still called Poo-Hilo. (Fornander 1996:89–90)

Project Area

Now that we know how Punalu'u got its name, let's talk about what used to be there. Considering the Punalu'u plains that the project area exists on were kula lands, there would've been soil terraces and mounds likely containing uala, but it really depends on the time period in question. To illustrate this better, a missionary speaks about his memories of the changes in the Punalu'u plain in the 1830s: Our family made repeated trips to the home of Rev. John S. Emerson at Waialua during those years. There was then no road save a foot path across the generally smooth upland. We forded the streams. Beyond Kīpapa Gulch the upland was dotted with occasional groves of Koa trees. On the high plains the ti plant abounded, often so high as to intercept the view. No cattle then existed to destroy its succulent foliage. According to the statements of the natives, a forest formerly covered the whole of the then nearly naked plains. It was burned off by the natives in search of sandalwood, which they detected by its odor burning. (Sterling and Summers 1978:89) There is also a writing from Kim Duffet illustrating the connection between navigation and the area. The writing is on a plaque at Mililani Town Center, accompanying a sculpture. The plaque reads, "In ancient times, Hawaiian Kahuna came to this site (Mililani Town Center area) to view the heavens because of its elevation and openness. Today, many of the streets in the town of Mililani are named after Hōkū, or stars in the night sky." This should be further researched, as it would be the most culturally impactful information we may have regarding this area of Punalu'u and is very close to the proposed construction site.

Again, I want this to be added to the cultural assessment since the majority of the information I have provided to you was not mentioned in your original assessment. You may contact me for any future Cultural Impact Assessment interviews or comments on the ahupuaa of Waipio and ili aina of Mililani.

Mahalo a nui,

Giovanni Kaanehe

(This page intentionally left blank.)

Appendix H

Transportation Impact Assessment Report

(This page intentionally left blank.)

Transportation Impact Assessment Report

Mililani High School Teacher Workforce Housing

Mililani, Hawai‘i

April 2026

Prepared for:

PBR Hawaii & Associates
1001 Bishop Street, Suite 650
Honolulu, Hawai‘i 96813
(808) 521-5631

Prepared by:

AECOM Technical Services, Inc.
1001 Bishop Street, Suite 1600
Honolulu, Hawai‘i 96813
(808) 521-5031

TMK: 9-5-001:054 and 9-5-001:017

Project Reference: 60766923

Contents

1.0 Introduction 1
2.0 Existing Conditions 4
2.1 Site Location 4
2.2 Roadway Conditions 4
2.2.1 Roadway Descriptions 4
2.2.2 Intersection Conditions 10
2.3 Pedestrian and Bicycle Facilities 11
2.3.1 Pedestrian Facilities 11
2.3.2 Bicycle Facilities 12
2.4 Public Transit Conditions 12
2.5 Existing Traffic Conditions 14
2.5.1 Existing Vehicular, Pedestrian, and Bicycle Volumes 14
2.5.2 Intersection Operations Methodology 17
2.5.3 Intersection Operations 18
3.0 Future Year 2030 Conditions 20
3.1 Proposed Development 20
3.2 Future Roadway Conditions 20
3.2.1 Roadway Conditions 20
3.2.2 Intersection Conditions 20
3.3 Future Pedestrian, Bicycle, and Public Transit Conditions 20
3.3.1 Future Pedestrian Facilities 20
3.3.2 Future Bicycle Facilities 21
3.3.3 Future Public Transit Facilities 21
3.4 Future Traffic Conditions 21
3.4.1 Projected Year 2030 Peak Hour Background Traffic 21
3.4.2 Vehicular Trips Generated by the Mililani High School Teacher Housing 23
3.4.3 Vehicular Trip Distribution and Assignment 23
3.4.4 Total Projected Year 2030 Peak Hour Traffic Volumes 26
3.4.5 Projected Year 2030 Peak Hour Intersection Operations 28

3.4.6 Multimodal Stress and Comfort Level Analysis 29
4.0 SUMMARY AND RECOMMENDATIONS 31
4.1 Summary 31
4.2 Recommendations 31
4.2.1 Vehicular Access 31
4.2.2 Travel Demand Management Actions 32
5.0 REFERENCES 34

List of Appendices

Appendix A Transportation Count Worksheets
Appendix B Synchro Worksheets
Appendix C HDOT Traffic Count Station Worksheets

Table of Figures

Figure 1 Site Location Map 2
Figure 2 Site Plan 3
Figure 3 View along Meheula Parkway (Top: Facing East, Bottom Facing West) 5
Figure 4 View along Meheula Parkway (Top: Facing North, Bottom Facing South) 6
Figure 5 View along Kamehameha Highway/Meheula Parkway (Top: Facing North, Bottom Facing South) 7
Figure 6 View along Lanikūhana Avenue at Meheula Parkway and Kamehameha Highway (Top: Facing West, Bottom Facing East) 8
Figure 7 View along Anania Drive at Meheula Parkway and Lanikūhana Avenue (Top: Facing North, Bottom Facing South) 9
Figure 8 View along Maka‘imo‘imo Street at Meheula Parkway and Lanikūhana Avenue (Top: Facing North, Bottom Facing South) 10
Figure 9 Existing Peak Hour Vehicular Volume Counts 16
Figure 10 Projected Year 2030 Peak Hour Traffic Volumes without Project 22
Figure 11 Trip Distribution for Project-Generated Traffic 25
Figure 12 Future Year 2030 AM and PM Peak Hour Traffic Volumes with Project 27
Figure 13 Meheula Parkway Multimodal Radar Diagram 30

Table of Tables

Table 1 Intersection Delay and Corresponding Levels-of-Service 17
Table 2 Existing Intersection Operations 18
Table 3 Projected Trip Generation by Mililani High School Teacher Workforce Housing 23
Table 4 Future Year 2030 AM Peak Hour Intersection Operations 28
Table 5 Future Year 2030 PM Peak Hour Intersection Operations 29

1.0 Introduction

The Hawai‘i School Facilities Authority (HiSFA) is developing a new Teacher Workforce Housing project located on the lower campus of Mililani High School along Meheula Parkway, between Kamehameha Highway and Anania Drive, in Central O‘ahu.

The project site is located on the lower campus of Mililani High School near Kaulauna Stadium and adjacent to the existing tennis courts. The planned development will consist of two main residential buildings, totaling approximately 95 dwelling units, with 149 off-street parking stalls, as well as shared amenities such as a courtyard and gathering space in a separate single-story building. Surface parking areas and an entry court will provide convenient access, while the site’s direct connection to Meheula Parkway allows for integration with the existing roadway network. The site will also have 27 long-term bicycle stalls and 6 short-term bicycle stalls.

Figure 1 illustrates the location of the Mililani High School Teacher Workforce Housing site. Figure 2 illustrates the conceptual site plan for the Teacher Workforce Housing Development.

The purpose of this transportation impact assessment report (TIAR) is to document the existing conditions, analyze the traffic operational impacts resulting from the increased traffic from the proposed Mililani High School Teacher Workforce Housing, report the results of the analysis, and summarize key findings and recommendations based on the results of the analysis.

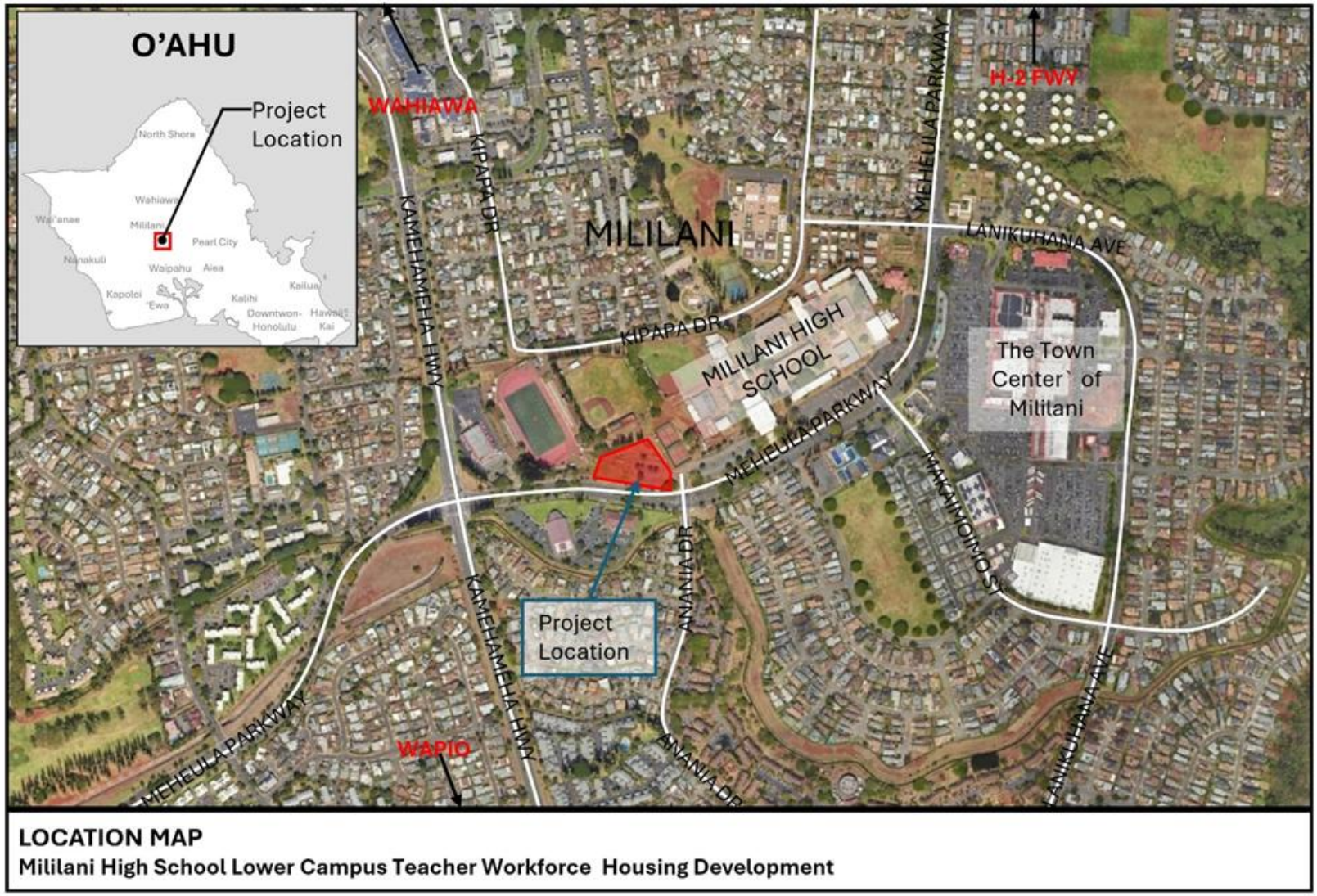

Figure 1 Site Location Map

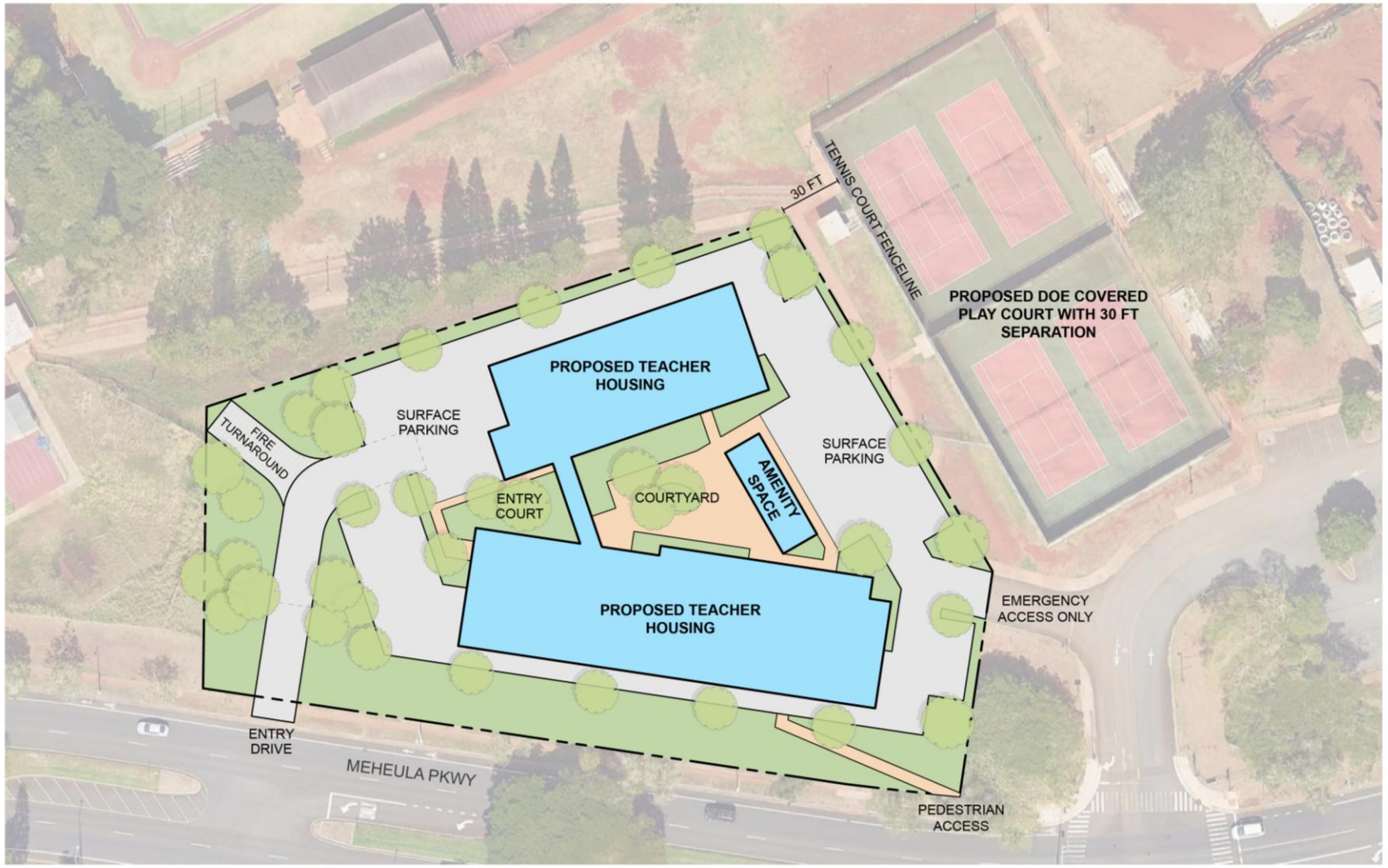

Figure 2 Site Plan

2.0 Existing Conditions

2.1 Site Location

The location of the new teacher housing development will be located within Mililani High School along Meheula Parkway between Kamehameha Highway and Anania Drive in the city of Mililani on the island of Oʻahu. The project is located on the lower campus of Mililani High School in the vicinity of Kauinana Stadium. The surrounding conditions of the site consist of the United States Postal Service, commercial businesses, nearby community parks, Mililani Waena Elementary School, the Church of Jesus Christ Latter-Day Saints (will be referred to as "Church" in this report), Mililani Public Library, and residential housing. The existing conditions around the project site such as the existing roadway, intersections, and pedestrian facilities are illustrated in Figure 2.

2.2 Roadway Conditions

The key roadways in the vicinity of the proposed Mililani High School Teacher Workforce Housing include the following: Meheula Parkway and Kamehameha Highway serve as the primary access and main circulation roadways while Anania Drive, Makaʻimoʻimo Street, Hookelewaa Street, and Lanikūhana Avenue all primarily serve as local roads.

2.2.1 Roadway Descriptions

Meheula Parkway is an arterial roadway running east-west through the area. South of Mililani High School, it connects major destinations such as the Town Center of Mililani, Walmart, and nearby residential neighborhoods. Meheula Parkway is a four lane, divided roadway, with two lanes in each direction. It has a curb and gutter on both sides of the road with the posted speed limit is 25 miles per hour (mph) and is under multiple jurisdictions for each segment of the road. Figure 3 illustrates the view of Meheula Parkway at Kamehameha Highway and Lanikūhana Avenue. Figure 4 illustrates Meheula Parkway in the vicinity of the project at the Church driveway and the lower campus of Mililani High School.

Figure 3 View along Meheula Parkway (Top: Facing East, Bottom Facing West)

Figure 4 View along Meheula Parkway (Top: Facing North, Bottom Facing South)

Kamehameha Highway (Route 99) is another arterial roadway running north-south through Mililani and located on the west side of the project location. Kamehameha Highway is a four lane, divided roadway, with two lanes in each direction connecting Mililani to other major regions such as Wahiawā to the north and Pearl City/H-2 Freeway to the south. With a posted speed limit of 35 mph and it is under state jurisdiction. Figure 5 illustrates the view of Kamehameha from the intersection of Meheula Parkway.

Figure 5 View along Kamehameha Highway/Meheula Parkway (Top: Facing North, Bottom Facing South)

Lanikūhana Avenue is city owned arterial roadway, runs along the east side of the Town Center of Mililani, connecting residential neighborhoods to key commercial, recreational, and community destinations. This four-lane, two in each direction, divided roadway serves as a primary access route to major establishments while linking major roadways like Meheula Parkway and Kamehameha Highway. On both sides, the road has curb and gutter along segments of the roadway and a posted speed limit of 25 mph. Figure 6 illustrates the view of Lanikūhana Avenue at Meheula Parkway and Kamehameha Highway.

Figure 6 View along Lanikūhana Avenue at Meheula Parkway and Kamehameha Highway (Top: Facing West, Bottom Facing East)

Anania Drive, a residential connector road located directly south of Kauinana Stadium and west of the Town Center of Mililani, linking residential areas to major routes Meheula Parkway and Lanikūhana Avenue. Anania Drive is a two lane, undivided, one lane in each direction roadway that runs north-south with curb and gutters along both sides of the road. This roadway is under the jurisdiction of the City and County of Honolulu. The posted speed limit of 25 mph and on street marked parallel parking with no restrictions between Puanane Loop and Kīʻaha Loop. Figure 7 illustrates the view of Anania Drive.

Figure 7 View along Anania Drive at Meheula Parkway and Lanikūhana Avenue (Top: Facing North, Bottom Facing South)

Makaʻimoʻimo Street is a city-owned residential and commercial connector roadway located south of Mililani High School. A two lane, one lane in each direction, undivided north-south roadway, with a posted speed limit of 25 mph. Makaʻimoʻimo Street is adjacent to the Town Center of Mililani and residential neighborhoods. Curb and gutter along the whole roadway and on street parking on both sides of the road start south of Lanikūhana Avenue. Figure 8 illustrates a view of Makaʻimoʻimo Street.

Figure 8 View along Maka‘imo‘imo Street at Meheula Parkway and Lanikūhana Avenue (Top: Facing North, Bottom Facing South)

2.2.2 Intersection Conditions

The intersections that are included as a part of this study include the following five intersections.

- Kamehameha Highway and Meheula Parkway;
- Meheula Parkway and Church of Jesus Christ of Latter-Day Saints driveway;
- Meheula Parkway and Anania Drive intersection;
- Meheula Parkway and Maka‘imo‘imo Street; and
- Meheula Parkway and Hookelewaa Street/Lanikūhana Avenue.

The intersection of Kamehameha Highway and Meheula Parkway is a four-legged, major signalized intersection that is west of the Mililani High School and near the proposed project site. This intersection accommodates multiple lanes and right only lanes and protected left lanes on all approaches. On Meheula Parkway the westbound and eastbound approach has one left-turn lane, two through lanes, and a channelized right-

turn lane. On Kamehameha Highway, the northbound and southbound approaches have one left-turn lane, two through lanes, and one channelized right-turn lane.

The Meheula Parkway and the driveway of the Church intersection is an unsignalized T-intersection with a STOP-sign control on the Church's driveway approach. On the Meheula Parkway approach heading toward Kamehameha Highway, there is a single left -turn lane on Meheula Parkway. On the opposite side of Meheula Parkway, there is a lane that could be converted to a left turn lane but is currently striped out to identify that the lane is not active.

The Anania Drive/Mililani High School Lower Campus Parking Lot intersection is a four-legged signalized intersection. On the northbound Anania Drive approach and southbound parking lot approach, there is a one shared through /left-turn lane and a right-turn lane. On Meheula Parkway westbound and eastbound approach has a through lane, one shared through and right-turn lane and left-turn lane.

The Maka'imo'imo Street/Mililani High School Upper Campus Parking Lot intersection is a four-legged signalized intersection. On the northbound Maka'imo'imo Street approach and southbound parking lot approach, there is a one shared through /left-turn lane and a right-turn lane. On Meheula Parkway westbound and eastbound approach has a through lane, one shared through and right-turn lane and left-turn lane.

The Meheula Parkway and Hookelewaa Street/Lanikūhana Avenue intersection is a major signalized, four-legged intersection. On Lanikūhana Avenue approach there is one left turn lane, through lane, and right-turn lane. On Hookelewaa Street approach a shared through/ left-turn lane and a shared through/right-turn lane. On Meheula Parkway the northbound approach, left-turn lane, two through lane, and a shared through/right-turn lane. On the southbound approach two left-turn lanes, a through lane, and a shared through/right-turn lane.

2.3 Pedestrian and Bicycle Facilities

2.3.1 Pedestrian Facilities

In the vicinity of the project area, Kamehameha Highway, Meheula Parkway, Anania Drive, Maka'imo'imo Street, Hookelewaa Street, and Lanikūhana Avenue all have detached sidewalks along both sides of the road.

The Kamehameha Highway and Meheula Parkway, Meheula Parkway and Anania Drive, Meheula Parkway and Maka'imo'imo Street, and Meheula Parkway and Hookelewaa Street/Lanikūhana Avenue intersections all have marked crosswalks across all approaches for the intersection.

2.3.2 Bicycle Facilities

Along Meheula Parkway, there is a bicycle lane along each side of the road between Kahalani Avenue to Lanikūhana Avenue. Along Lanikūhana Avenue, there are shared lane markings, sharrows, on both sides of the road between the south end of Meheula Parkway to Mililani Shopping Center.

2.4 Public Transit Conditions

The City and County of Honolulu Department of Transportation Services (DTS) through the Oahu Transit Service (OTS) operates the TheBus system on the island of O‘ahu. The following descriptions detail the TheBus routes that operate and travel in the vicinity of the Mililani High School Teacher Workforce Housing project site.

Route 51 and Route 52 provide service between Wahiawa/Haleiwa and Honolulu. For westbound, during the AM peak period, Route 51 runs from approximately 5:45 AM to about 8:45 AM (span of approximately 3 hours) meanwhile Route 52 runs from approximately 7:00 AM to about 8:45 AM (span of approximately 2 hours). In the PM peak period, Route 51 and Route 52 run from approximately 3:00 PM to 6:00 PM (span of approximately 3 hours).

For eastbound, during the AM peak period, Route 51 runs from approximately 6:00 AM to about 8:45 AM (span of approximately 3 hours), meanwhile Route 52 runs from approximately 6:45 AM to 9:00 AM (span of approximately 2 hours). In the PM peak period, both routes run from approximately 3:15 PM to 6:00 PM (span of approximately 3 hours). In the vicinity of the project, it runs through Kamehameha Highway, and Meheula Parkway. Route 51 also runs through Lanikūhana Avenue.

Route 84 and 84A provides an express service from Mililani to Downtown area. During the AM peak period, they run from approximately 5:15 AM to 6:30 AM (span of approximately 1 hour). In the PM peak period, they run from approximately 5:00 PM to 6:30 PM (span of approximately 1 hour). In the vicinity of the project, Route 84 and Route 84A run through Meheula Parkway and Lanikūhana Avenue.

Route PH2 provides an express service from Mililani to Pearl Harbor. During the AM peak period, it runs one time approximately at 5:00 AM and during PM peak period, it runs one time approximately at 4:00 PM. In the vicinity of the project, Route PH2 runs through Meheula Parkway and Lanikūhana Avenue.

Route 98A provides an express service from Mililani Transit Center to Downtown. During the AM peak period, it runs from approximately 5:00 AM to 6:00 AM (span of approximately 1 hour) and the PM peak period, it runs from approximately 5:15 PM to 6:15 PM (span of approximately 1 hour). In the vicinity of the project, Route PH2 runs through Meheula Parkway and Kamehameha Highway.

Route 99 provides a service between Wahiawa and Kapolei. During the AM peak period, it runs from approximately 5:15 AM to about 7:00 AM (span of approximately 2 hours). In the PM peak period, it runs from approximately 4:45 PM to 6:00 PM (span of approximately 1 hour. In the vicinity of the project, it runs through Kamehameha Highway and Meheula Parkway.

Routes 501, 503, and 504 provide a service in the local areas of Mililani. Route 501, during the AM peak period, runs from approximately 6:00 AM to about 8:30 AM (span of approximately 2 hours). In the PM peak period, it runs from approximately 2:45 PM to 3:45 PM (span of approximately 1 hour). In the vicinity of the project, Route 501 runs through Meheula Parkway and relatively on the east side of Mililani High School.

Route 504, during the AM peak period, runs from approximately 6:00 AM to about 9:00 AM (span of approximately 3 hours). In the PM peak period, it runs from approximately 3:00 PM to 6:00 PM (span of approximately 1 hour). In the vicinity of the project, it runs through Meheula Parkway and Kīpapa Street which is North of Mililani High School.

Route 503, northbound during the AM peak period, runs from approximately 5:50 AM to about 9:00 AM (span of approximately 3 hours). In the PM peak period, it runs from approximately 2:55 PM to 5:45 PM (span of approximately 3 hours. Southbound during the AM peak period, it runs from approximately 6:15 AM to 8:45 AM (span of approximately 3 hours). During the PM peak period, it runs from approximately 3:30 PM to 6:00 PM (span of approximately 3 hours). In the vicinity of the project, it runs through Meheula Parkway and Kīpapa Street which is North of Mililani High School.

In the vicinity of the project site, there are several bus stops that service the area. The following bus stops are located primarily along Meheula Parkway, Kamehameha Highway and Lanikūhana Avenue. Near the intersection of Hookelewaa Street/Lanikūhana Avenue and Meheula Parkway, there are two bus stops. One located on the Ewa mauka side of the intersection: Stop #1609. The other bus stop: Stop #3435 (Eastbound) located on the Ewa, makai side of the road for buses traveling in the east/southbound direction.

The Mililani Transit Center is located on this segment of Meheula Parkway. The bus stops located on Meheula Parkway right across Mililani High School and adjacent to Town Center of Mililani; Stop #4418 (Westbound) and Stop #4419 (Eastbound). Near intersection of Hikikaulia Street/Mililani High School Upper Campus, there are two bus stops; Stop #1610 for the westbound buses and Stop #1616 for the eastbound buses. At the intersection of Anania Drive/Miliani High School Lower Campus on Meheula Parkway there are two bus stops: Stop #1611 (westbound) and Stop #1615. Near the project site, at the intersection of Meheula Parkway and Kamehameha Highway there are three bus stops: Stop #1614, Stop #1612(westbound), and #1619.

2.5 Existing Traffic Conditions

2.5.1 Existing Vehicular, Pedestrian, and Bicycle Volumes

Vehicular turning movement, bicycle, and pedestrian counts were collected for the AM and PM peak periods between Tuesday, September 9, 2025 and Wednesday, September 24, 2025. The turning movement counts were conducted at the following intersections along Meheula Parkway:

- Kamehameha Highway (Thursday, September 11, 2025 (AM peak period) and Tuesday, September 16, 2025 (PM peak period);
- Church's driveway (Wednesday, September 24, 2025);
- Anania Drive (Wednesday, September 24, 2025);
- Makaʻimoʻimo Street (Tuesday, September 9, 2025); and
- Lanikūhana Avenue (Tuesday, September 9, 2025)

A midday peak hour period count was conducted on Wednesday, September 24, 2025, at Anania Drive and Church's driveway intersection. The midday count was included to capture the school-related traffic during the data collection effort. The bell schedule for Mililani High School is from 8:00 AM to 3:00 PM except on Wednesdays where school is from 8:00 AM to 1:23 PM. The study periods on Tuesdays and Thursdays were from 6:30 AM to 8:30 AM and 2:00 PM to 6:00 PM. On Wednesday, the study period was from 6:30 AM to 8:30 AM, 12:30 PM to 2:00 PM, and 3:00 PM to 6:00 PM. On September 9, 2025, Mililani High School held a College and Career Fair from 5:00 PM to 7:00 PM, which some of the traffic was documented during the data collection effort.

From these study periods, the AM peak hour was determined to occur from 7:15 AM to 8:15 AM and the PM peak hour was determined to occur from 4:00 PM to 5:00 PM. For the Anania Drive and Church driveway intersections, the midday peak was determined to occur from 12:45 PM to 1:45 PM. In accordance with DTS's Transportation Impact Assessment (TIA) Guide, it requires the use of traffic volumes from the second-highest peak hour rather to evaluate impacts from the project. The second highest AM peak hour was from 7:30 AM to 8:30 AM and the second highest PM peak hour was from 4:30 PM to 5:30 PM. The second highest midday peak hour for the Anania Drive and Church driveway was from 12:30 PM to 1:30 PM. The traffic count worksheets are included in Appendix A. Figure 9 summarizes the existing vehicular counts for the second highest AM and PM peak hours. At the intersection with the Church's driveway, it was observed that there were 4 U-turns during the second highest AM peak hour and 17 U-turns during the second highest PM peak hour.

The pedestrian and bicycle counts were collected for all intersections. The pedestrian and bicycle count worksheets are included in Appendix A. The Kamehameha Highway and Meheula Parkway intersection had moderate pedestrian and bicycle activity. During the second highest AM peak hour, it was observed that there were 25 pedestrians and 5 bikes. During the second highest PM peak hour, there were 3 pedestrians and 4 bikes.

At the Church's driveway intersection, during the second highest AM peak hour, there were 19 pedestrians, 4 crossing the Church's driveway and 15 crossing the proposed project site driveway. There were four bikes observed during this peak period. During the midday peak hour, it was observed that there were 28 pedestrians and 0 bikes. Most of these pedestrians were students as this was conducted on a Wednesday where nearby Mililani High School finishes around this time as noted previously. During the PM peak hour, it was observed that there were 6 pedestrians and 0 bikes.

At the Anania Drive/Mililani High School Lower Campus Parking Lot intersection there were heavy pedestrians and moderate bike activity during AM peak hour with 56 pedestrians and 8 bikes. The second highest midday peak hour had 60 pedestrians and 8 bikes. Meanwhile there were light pedestrian and bike activity during the second highest PM peak hour with 14 pedestrians and 2 bikes. Most of the pedestrian activity during the AM and midday peak hours are students which align with the Mililani High School bell schedule.

At the Makaʻimoʻimo Street/Mililani High School Upper Campus Parking Lot intersection, there was heavy pedestrian activity and moderate bike activity. During the second highest AM peak hour with 233 pedestrians and 8 bikes, as well as the second highest PM peak hour with 128 pedestrians and 1 bike.

At the Lanikūhana Avenue/Hookelewaa Street intersection there were heavy pedestrian and bike activity. During the second highest AM peak hour it was observed there were 121 pedestrians and 14 bikes. During the second highest PM peak hour, it was observed that there were 33 pedestrians and 7 bikes.

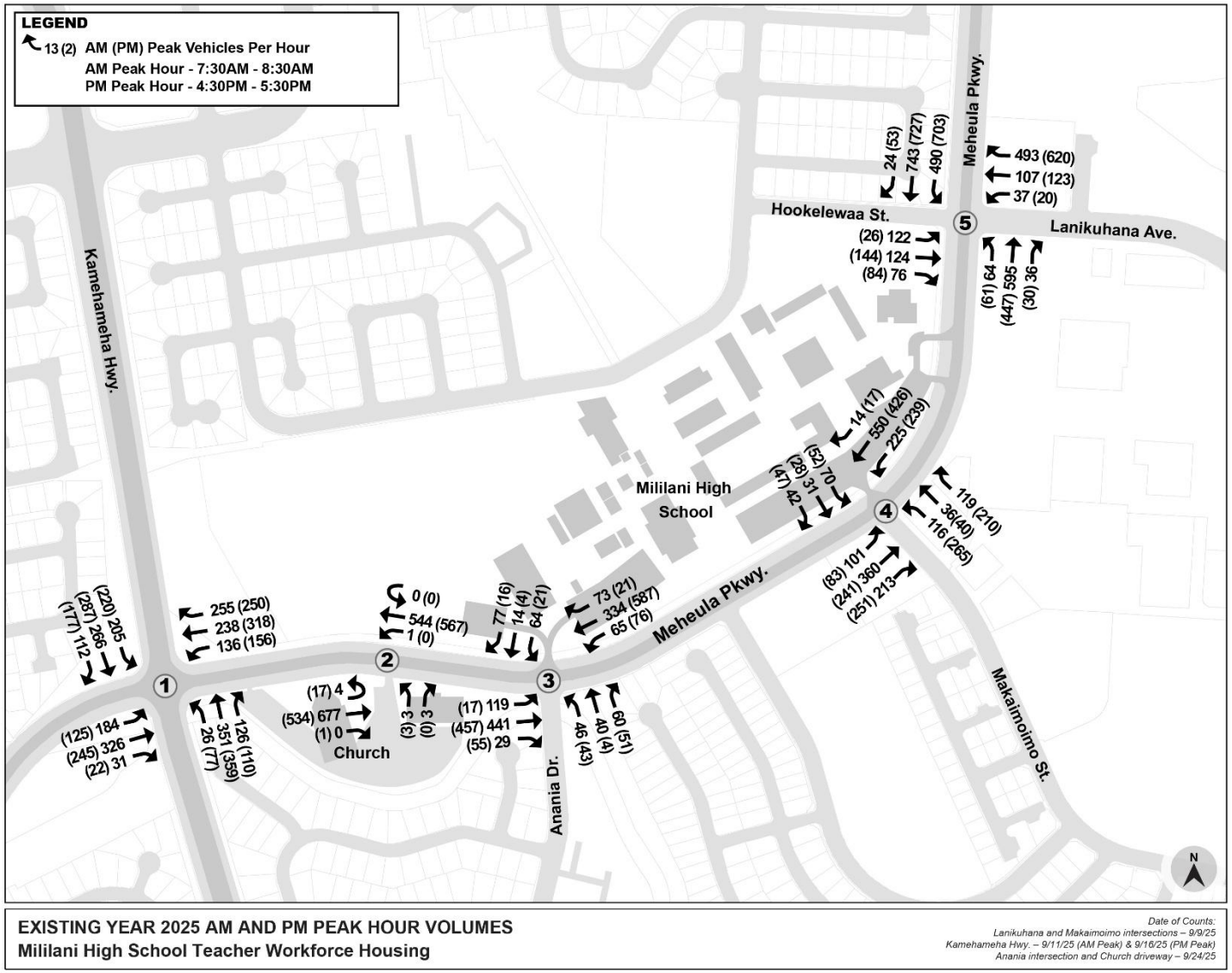

Figure 9 Existing Peak Hour Vehicular Volume Counts

2.5.2 Intersection Operations Methodology

Traffic signal control and stop control schemes were used to evaluate the intersections to determine any potential impacts resulting from the proposed Mililani High School Teacher Workforce Housing.

For the intersections, traffic operational analyses were conducted using Synchro/SimTraffic 12.0 in accordance with procedures outlined in the Highway Capacity Manual (HCM). Table 1 the control delays and corresponding levels of service (LOS) established in the HCM for signalized and unsignalized intersections.

Table 1 Intersection Delay and Corresponding Levels-of-Service

Level-of-Service	Signal Control Delay (sec/veh)	Stop Control Delay (sec/veh)
A	< 10	< 10
B	10 – 20	10 – 15
C	20 – 35	15 – 25
D	35 – 55	25 – 35
E	55 – 80	35 – 50
F	> 80	> 50

Source: HCM 7th Edition, Volume 3: pg. 19-16, 20-6

The goal of this analysis was to understand the existing operations of the signalized and stop-controlled intersections. For future conditions, it would be to determine the operational sufficiency for the intersections to serve the added demand of traffic as a result of adding the proposed development. The following assumptions/input parameters were used in the intersection analysis:

- Peak hour factor: Ranges from 0.67-0.95
- Percent Heavy Vehicles: 2%
- Vehicle travel speed: the posted speed limit
- Lane widths: 12’
- Base saturation flow rate: 1,900 vehicles per hour per lane (vphpl) for all movements
- Right-turn on red movements: These traffic movements were included in the analysis and modeled in the software
- Signal cycle length: Varies (based on field measurements of the existing signal timing)

2.5.3 Intersection Operations

Table 2 summarizes the existing (Year 2025) intersection LOS and delay results for the second highest AM and PM peak hours. The AM and PM existing traffic volumes are more conservative than the midday traffic volumes and were the volumes used for the remainder of the analysis. The corresponding Synchro worksheets are included as part of Appendix B.

Table 2 Existing Intersection Operations

Intersection LOS and Delay	AM Peak Hour		PM Peak Hour	
	Delay (sec/veh)	LOS	Delay (sec/veh)	LOS
Meheula Pkwy & Kamehameha Hwy	44.8	D	32.0	C
Meheula Pkwy & Church of Jesus Christ Latter-Day Saints Drwy*				
Meheula Pkwy WB LT	10.0	B	0.0	A
Church Dwy LT/RT	21.5	C	18.9	C
Meheula Pkwy & Anania Dr/Mililani HS Dwy	28.9	C	19.6	B
Meheula Pkwy & Maka‘imo‘imo St/Mililani HS Dwy	30.5	C	38.7	D
Meheula Pkwy & Lanikūhana Ave/Hookelewaa St	41.7	D	38.4	D

Notes: AM 2nd Peak Hour: 07:30-08:30 AM, PM 2nd Peak Hour: 4:30-5:30 PM
sec/veh = seconds per vehicle, LOS = Level of Service. Pkwy = Parkway, Hwy = Highway, Dr = Drive, Dwy = Driveway, St = Street, Ave = Avenue
* Indicates an unsignalized intersection

As shown in Table 2, all of the overall intersections or key-turning movements operate at LOS D or better, which indicates heavy but acceptable operations during both peak hour periods. The Kamehameha Highway intersection currently operates at a LOS D during the AM and LOS C during the PM peak hour periods. The turning movement from the Church’s driveway intersection operates at LOS C during the AM and LOS B during the PM peak hour periods. The left turn movement from Meheula Parkway into the Church operates at LOS B during the AM and at LOS A during the PM peak hour periods. The Anania Drive intersection currently operates at a LOS C during the AM peak hour and at LOS B during the PM peak hour. The Maka‘imo‘imo Street intersection currently operates at a LOS C and a LOS D during the AM and PM peak hour periods, respectively. Finally, Lanikūhana Avenue currently operates at a LOS D during AM and PM peak hour periods.

The results from the analysis are consistent with what was observed during data collection. It was observed that the Church's Driveway/Meheula Parkway intersection did not have any vehicles enter the Church's driveway during the PM peak periods, which is reflected in the calculated delay from Synchro.

3.0 Future Year 2030 Conditions

3.1 Proposed Development

The Teacher Workforce Housing will be located on a 1.7 acre site within the Mililani High School campus. The access to the development will be from Meheula Parkway, across from the driveway for the Church. The development plans to have a total of 95 total units. The proposed development is near the Town Center of Mililani, which is a shopping mall with various eateries, stores, and other services available. The proposed development is also near Mililani Park and Mililani Waena Elementary School.

3.2 Future Roadway Conditions

3.2.1 Roadway Conditions

It is assumed that there would not be any major changes to the roads in the vicinity of the proposed developments. No upcoming roadway projects were listed in the vicinity of the development on The City and County of Honolulu and the HDOT websites.

3.2.2 Intersection Conditions

Upon reviewing the projects in the surrounding area, there is one project related to intersection improvements in the study area. This project is the Traffic Signal Modernization at Various Locations, O‘ahu Phase 4A, which includes the intersection of Meheula Parkway and Kamehameha Highway. The project scope includes the replacement of traffic signal pullboxes, traffic signal poles, pedestrian pushbuttons, loop detectors, and for the various traffic signal cables needed. While not directly related to the project access, the improvements will be beneficial for future residents.

3.3 Future Pedestrian, Bicycle, and Public Transit Conditions

3.3.1 Future Pedestrian Facilities

As noted in Section 2.3.1, Pedestrian Facilities, the areas around the study intersections primarily have usable sidewalks and crosswalks.

Two pedestrian improvement projects are planned near the project site. DTS is currently designing a crosswalk enhancement at the intersection of Hikikauila Street and Meheula Parkway to improve pedestrian safety. Additionally, a sidewalk improvement project along both sides of Kamehameha Highway—from Meheula Parkway to Lanikūhana Avenue—is underway, with AECOM serving as the design consultant. This project will install new sidewalks to connect existing pedestrian infrastructure and enhance walkability in the area. Both pedestrian projects will help to enhance the pedestrian facilities for future residents of the development.

3.3.2 Future Bicycle Facilities

Based on the DTS's 2019 Oʻahu Bike Plan Update, there are several proposed bicycle projects near the project site. The proposed bicycle projects are separated into several tiers with Tier 1 having the highest priority and Tier 3 having the lowest priority. The Tier 1 project is along Meheula Parkway, which currently serves an existing bike lane, and proposes to install a protected bike lane from Lanikūhana Avenue (south) to H-2 Interchange. The remaining projects in the vicinity of the proposed development are Tier 2 projects. These projects propose the installation of bike lanes alongside Lanikūhana Avenue, Anania Drive, and Kipapa Drive. The project along Lanikūhana Avenue, which currently serves as a shared roadway, would install a bike lane from the south end of Meheula Parkway to Mililani Shopping Center. Along Anania Drive, the proposed project would install a bike lane from Meheula Parkway to Kipapa Gulch Path. Along Kipapa Drive, the proposed project plans to add bike lanes along Kipapa Drive Loop. The other Tier 2 project is located along Kamehameha Highway. The project would continue the shoulder bikeway facility from Lanikūhana Avenue to Ka Uka Boulevard.

3.3.3 Future Public Transit Facilities

As noted in Section 2.4, there are multiple bus stops and routes that service Meheula Parkway. The current assumption is that there are currently no projects that directly involve improvements to the public transit for Mililani based on the information provided on TheBus's website. In the future, there may be some updates to some of the routes that travel along Meheula Parkway to better integrate them with the new Skyline system.

3.4 Future Traffic Conditions

3.4.1 Projected Year 2030 Peak Hour Background Traffic

Background traffic accounts for the growth in traffic unrelated to the proposed Teacher Workforce Housing development. According to the HiSFA webpage, the tenants are projected to move in during 2029. For the purpose of this study, it is assumed that a full build out with residents moved in will occur in 2030, which is five years from the data collection period. The future background traffic was grown and projected out to the Year 2030 and will be used for all of the future traffic analyses.

On Meheula Parkway, there is an existing HDOT traffic count station near the intersection with Lanikūhana Avenue. Using the count station data from 2015 and 2019, a growth rate for the area was determined using annual average daily traffic (AADT) volumes between the two years. When the growth rate was calculated using these volumes, a 0.6% growth rate was obtained. This growth rate was applied globally for all movements at each of the intersections with the exception for any turning movement entering or exiting from Mililani High School. The traffic count station worksheets are included in Appendix C.

Figure 10 illustrates the projected Year 2030 peak hour turning movement volumes for the background traffic.

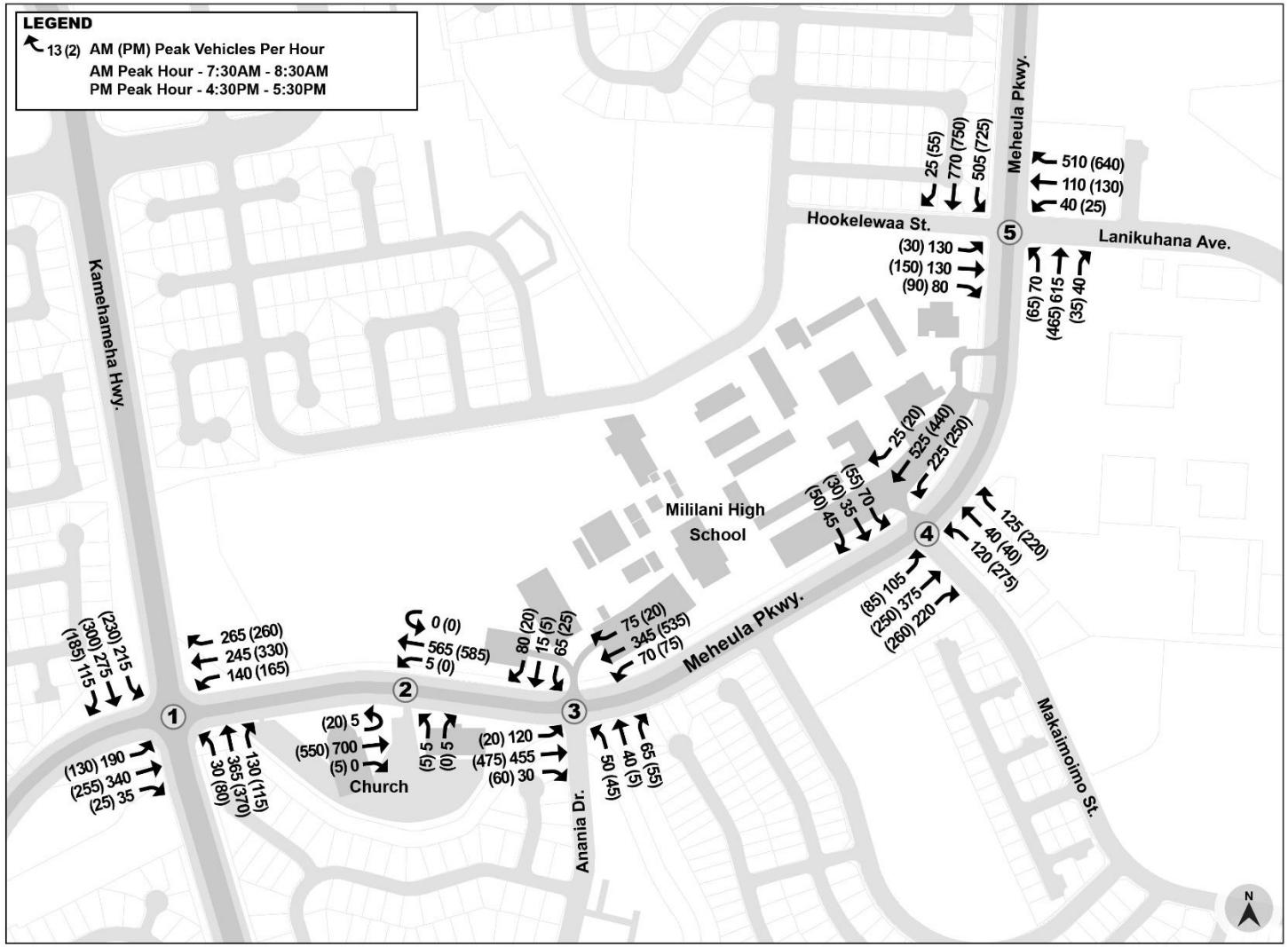

Figure 10 Projected Year 2030 Peak Hour Traffic Volumes without Project

3.4.2 Vehicular Trips Generated by the Mililani High School Teacher Housing

Table 3 summarizes the land use and estimated vehicular volumes that would be generated by the proposed Mililani High School Teacher Workforce Housing development. The vehicular volume is based on the trip generation rates documented in the Institute of Transportation (ITE) publication, Trip Generation, 11th Edition. Equations for the AM and PM peak hours of adjacent street traffic periods were used in this estimation.

Trip generation equations for Category 220 – Multifamily Housing (Low-Rise) were used to estimate the vehicular traffic generated by the proposed development. The index used as the predictor of generated traffic was the number of dwelling units. Due to the purpose of the housing, an assumption was made a small percentage of the trips generated from the site would be headed toward Mililani High School. It was assumed that approximately 5% of the generated trips would be bound toward Mililani High School and would not access the surrounding roadway network.

Table 3 Projected Trip Generation by Mililani High School Teacher Workforce Housing

Land Use	Intensity	ITE Category	AM Peak Hour		PM Peak Hour	
			In	Out	In	Out
Multifamily Housing (Low-Rise)	95 Dwelling Units (DU)	220	12	40	38	23
Internal Capture			0	2	1	2
Total			12	38	37	21

Notes: AM and PM Peak Hour traffic volumes are in vehicles per hour. Trip Generation is the estimation of vehicular traffic based on equations documented in the Institute of Transportation Engineers' publication, Trip Generation, 11th Edition.
For Category 220 - Multifamily Housing (Low-Rise), the trip generation equations are:
AM Peak Hour: T = 0.31(X) + 22.85 (24% Enter/76% Exit)
PM Peak Hour: T = 0.43(X) +20.55 (63% Enter/37% Exit)
where T = traffic volume (vehicles per hour) and X = number of dwelling units

3.4.3 Vehicular Trip Distribution and Assignment

The total projected Year 2030 vehicular traffic volumes generated by the Teacher Workforce Housing summarized in Table 3 were directionally assigned to the roadway network. For the purpose of this study, the project generated traffic was assigned to the roadway network using the directional splits entering and exiting area at the two ends of the study area (the Kamehameha Highway and Lanikūhana Avenue/ Hookelewaa Street intersections). Using this split, the trips were distributed to the surrounding roadway

network. The trips generated and assigned to the roadway network are summarized in Figure 11 below.

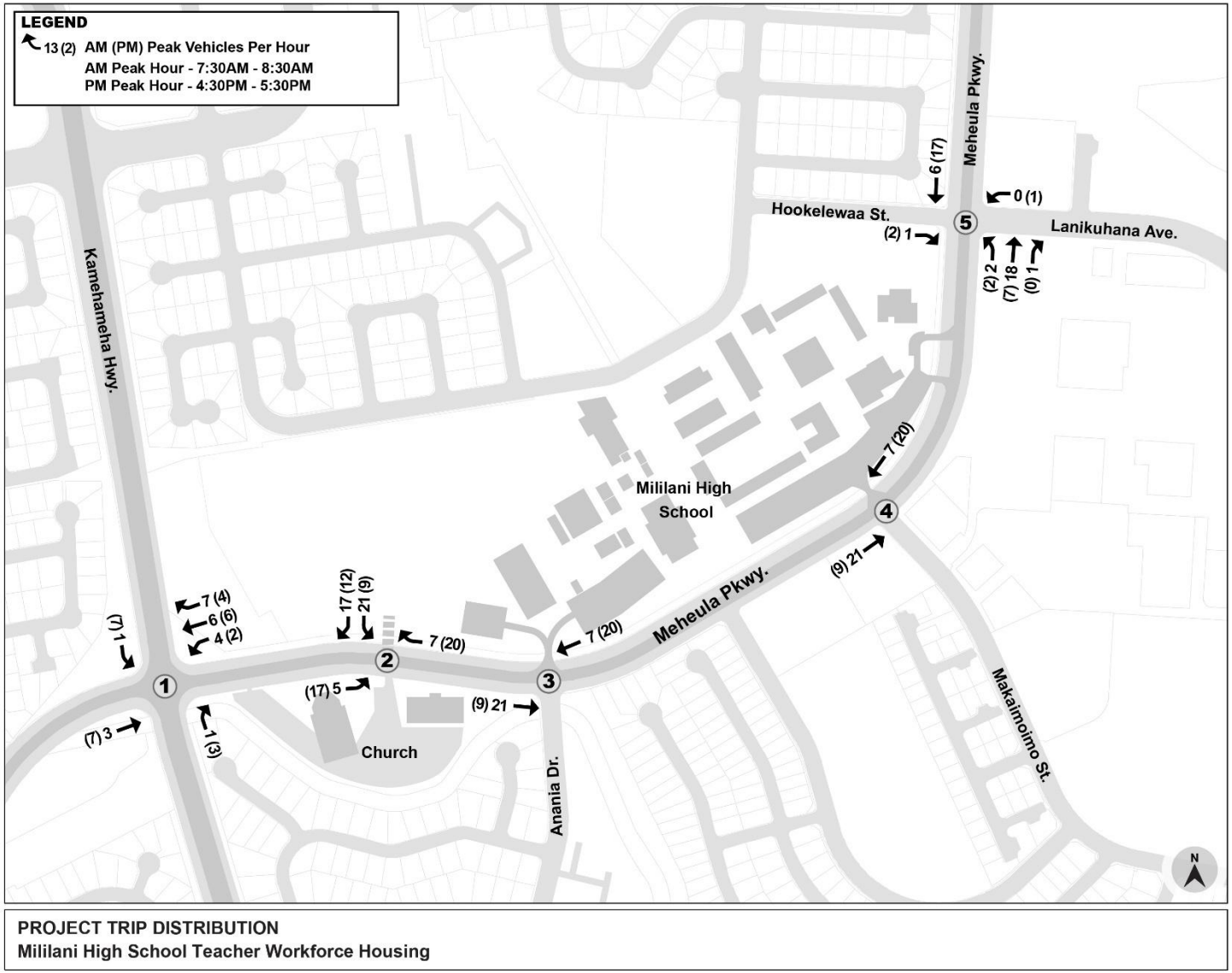

Figure 11 Trip Distribution for Project-Generated Traffic

3.4.4 Total Projected Year 2030 Peak Hour Traffic Volumes

The projected traffic volumes generated by the proposed Workforce Teacher Housing summarized in Figure 11 were combined with the projected Year 2030 background traffic summarized in Figure 10 to calculate the total projected Year 2030 peak hour traffic volumes. The total projected Year 2030 peak hour traffic volumes are summarized in Figure 12 below.

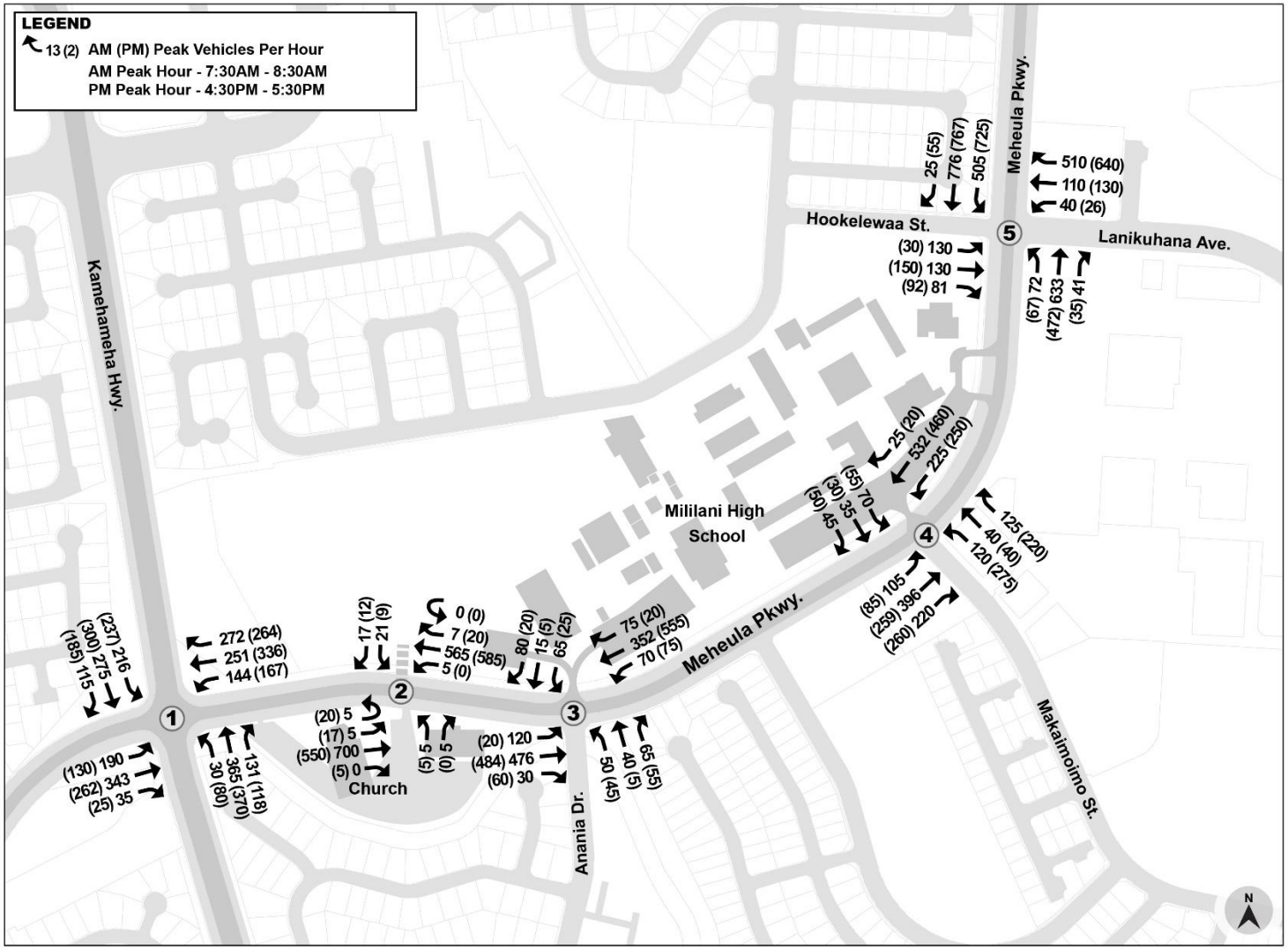

Figure 12 Future Year 2030 AM and PM Peak Hour Traffic Volumes with Project

3.4.5 Projected Year 2030 Peak Hour Intersection Operations

The projected Year 2030 peak hour traffic volumes with (build) and without (no build) the proposed project were evaluated using the same methodologies described in Section 2.5.2, Intersection Operations Methodology using Synchro/SimTraffic analysis software. Table 4 and Table 5 summarize the results of the analysis for the AM peak hour conditions and the PM peak hour conditions, respectively.

Table 4 Future Year 2030 AM Peak Hour Intersection Operations

Intersection LOS and Delay	No Build		Build	
	Delay (sec/veh)	LOS	Delay (sec/veh)	LOS
Meheula Pkwy & Kamehameha Hwy	47.5	D	48.4	D
Meheula Pkwy & Church of Jesus Christ Latter-Day Saints Drwy*				
Meheula Pkwy WB LT	10.2	B	10.2	B
Meheula Pkwy EB LT	-	-	9.5	A
Church Dwy LT/RT	23.5	C	30.2	D
Proposed Dwy LT/RT	-	-	34.6	D
Meheula Pkwy & Anania Dr/Mililani HS Dwy	30.4	C	30.7	C
Meheula Pkwy & Maka‘imo‘imo St/Mililani HS Dwy	32.6	C	33.5	C
Meheula Pkwy & Lanikūhana Ave/Hookelewaa St	46.4	D	47.0	D

Notes: AM 2nd Peak Hour: 07:30-08:30 AM, PM 2nd Peak Hour: 4:30-5:30 PM

sec/veh = seconds per vehicle, LOS = Level of Service. Pkwy = Parkway, Hwy = Highway, Dr = Drive, Dwy = Driveway, St = Street, Ave = Avenue

* Indicates an unsignalized intersection

Table 5 Future Year 2030 PM Peak Hour Intersection Operations

Intersection LOS and Delay	No Build		Build	
	Delay (sec/veh)	LOS	Delay (sec/veh)	LOS
Meheula Pkwy & Kamehameha Hwy	33.8	C	34.8	C
Meheula Pkwy & Church of Jesus Christ Latter-Day Saints Drwy*				
Meheula Pkwy WB LT	0.0	A	0.0	A
Meheula Pkwy EB LT	-	-	9.1	A
Church Dwy LT/RT	19.7	C	25.0	D
Proposed Dwy LT/RT	-	-	17.7	C
Meheula Pkwy & Anania Dr/Mililani HS Dwy	20.0	B	20.1	C
Meheula Pkwy & Maka'imo'imo St/Mililani HS Dwy	41.2	D	41.4	D
Meheula Pkwy & Lanikūhana Ave/Hookelewaa St	40.8	D	41.1	D

Notes: AM 2nd Peak Hour: 07:30-08:30 AM, PM 2nd Peak Hour: 4:30-5:30 PM
sec/veh = seconds per vehicle, LOS = Level of Service. Pkwy = Parkway, Hwy = Highway, Dr = Drive, Dwy = Driveway, St = Street, Ave = Avenue
* Indicates an unsignalized intersection

As shown in Table 4 and Table 5, the intersection movements are projected to operate with a LOS D or better under both the build and no build scenarios in both peak hour periods. The projected delays and LOS are very similar with both scenarios. There is an increase in delay from vehicles turning out of the Church driveway from LOS C to LOS D after the proposed driveway is functioning. While the LOS does increase after the project opens, there was not much traffic volume that accessed the church during the peak hour periods and the LOS is generally still acceptable during the peak hour periods. The other intersections had a minimal impact on delay and LOS after the project-generated traffic was added to the roadway network. The future intersection analysis indicates that the roadway network around the project site would be able to handle the additional traffic and operate at an acceptable LOS during the peak hour periods. Transportation demand management (TDM) strategies will recommend to encourage other modes of transportation to potentially reduce auto trips from the project site.

3.4.6 Multimodal Stress and Comfort Level Analysis

In addition to the vehicular operations at the intersections, the pedestrian, bicycle, and public transit LOS were also calculated. DTS's TIA Guide includes various tools to

evaluate each street's LOS for pedestrian, bicycle, and public transit modes. The corresponding LOS for each mode was entered into a spreadsheet that generates the multimodal radar diagram that was used to evaluate the stress and comfort levels for streets related to the project site.

The street segment evaluated for this project includes Meheula Parkway as it is the street that directly fronts the access for the proposed development. Figure 13 shown below is the multimodal radar diagram for Meheula Parkway.

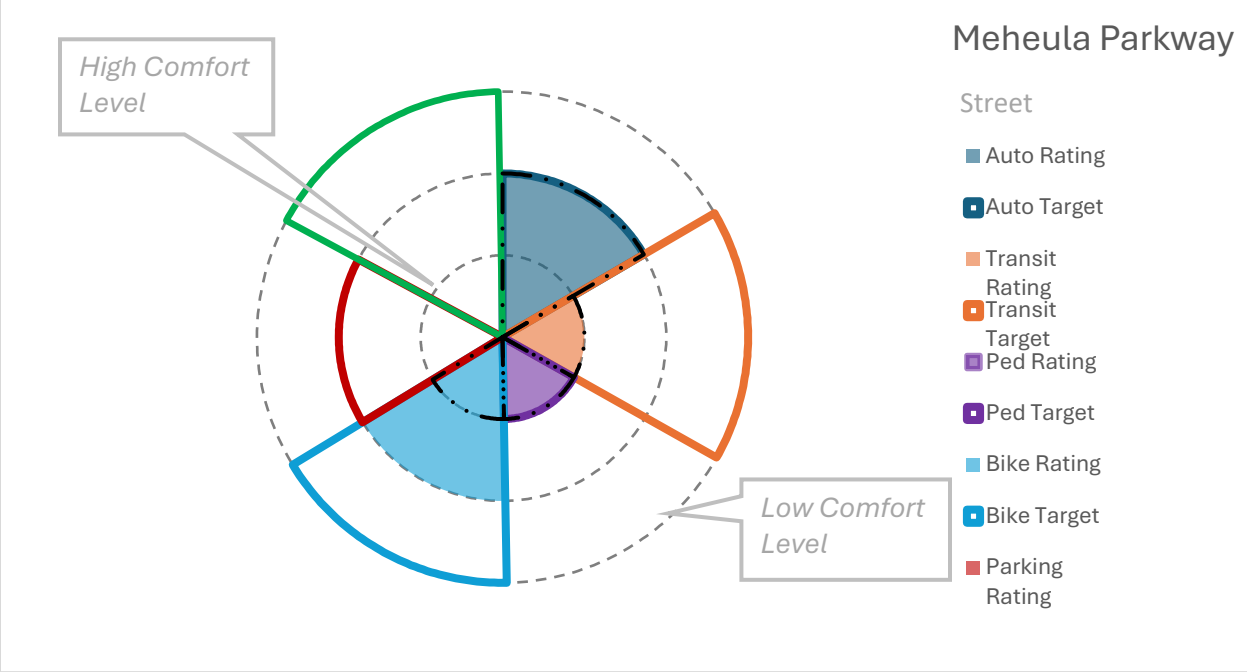

Figure 13 Meheula Parkway Multimodal Radar Diagram

As shown in Figure 13, the auto rating, transit rating, pedestrian rating, and bike rating all meet the target rating for both the existing and proposed conditions. This segment of Meheula Parkway includes the Mililani Transit Center and has several bus stops between Lanikūhana Avenue and Kamehameha Highway, which should provide residents sufficient access to public transit. This segment of Meheula Parkway has detached sidewalks along both sides of the road with sporadic trees located along the roadway, which helps with the walkability of the area. The road currently has bike lanes along both sides of the road with plans to upgrade the bicycle lane into a protected bicycle lane in the future. Based on this evaluation, the area should be comfortable for all modes of transportation in the future.

4.0 SUMMARY AND RECOMMENDATIONS

4.1 Summary

The proposed Mililani High School Teacher Workforce Housing development will be located on the lower campus of Mililani High School. The site access is located along Meheula Parkway opposite of the Church driveway. The proposed development will have 95 units and is scheduled to be completed by 2029.

The proposed Teacher Workforce Housing is projected to generate 52 vehicles per hour (vph) during the AM peak hour and 61 trips during the PM peak hour. This analysis assumed that a small percentage of these trips would be bound for Mililani High School and would not access the surrounding roadway network. The analysis assumed that the trips would be distributed using a similar travel patterns as the existing traffic. The directional splits were determined using the inbound and outbound volumes along Meheula Parkway at the Lanikūhana Avenue and Kamehameha Highway intersections.

The additional traffic generated by the proposed Teacher Workforce Housing site is projected to have a minimal impact on the peak period intersection operations for the surrounding intersections. The analysis indicated that there was very little change to the delay and LOS between the build and no build scenarios with all intersections or key turning movements operating at a LOS D or better.

4.2 Recommendations

Based on the results of the operations analysis, these are the following recommendations for the project.

4.2.1 Vehicular Access

At the current intersection with the Church driveway, there is currently a left-turn lane available that is striped out to not be an active lane and a curb cut that could be converted to the project driveway. During the project, the roadway striping should be modified to activate the left-turn lane from Meheula Parkway into the project driveway. The project driveway should be installed with one lane for the entering traffic and one lane for the exiting traffic, which would allow a left turn from the project driveway onto Meheula Parkway.

An alternative option for the configuration of the project driveway has also been proposed. This alternative configuration would have one lane for the entering traffic and two lanes for the exiting traffic. This configuration would not affect the traffic assignment and should work as long as the driveway has sufficient width for three lanes.

It is recommended that STOP-sign-controlled access be installed at the project driveway. The intersection operates at an acceptable level for the peak hour period with just STOP-sign control at the driveway.

The proposed project intersection would not warrant the installation of a traffic signal based on Warrant 3, Peak Hour, the projected peak hour volumes on Meheula Parkway and the project driveway fall well below the threshold volumes required for Warrant 3. While a full traffic signal warrant analysis should be completed after the project is completed if a traffic signal is desired, the projected volumes likely would not meet Warrant 1, Eight-Hour Vehicular Volume, or Warrant 2, Four-Hour Vehicular Volume threshold volumes, as well. Other intersection improvements that could be implemented such as 4-way stop control and a roundabout, but would likely not be warranted (4-way stop control) or not be a feasible solution (roundabout) to address traffic safety concerns.

Other solutions that potentially addresses the traffic safety concerns include allowing the use of the driveway opposite of Anania Drive under certain situations such as large events occurring at the Church of Jesus Christ of Latter-day Saints and evaluating the driveway at the Post Office. However, for the latter option, that evaluation is outside of the scope of this project and if options are being considered, it should be brought up to the City and County of Honolulu.

The line of sight around the project driveway should be maintained. A crosswalk across the driveway and ADA compliant curb ramps should be installed. The project should also consider future changes to the surrounding area such as upgrades to the bicycle facilities.

4.2.2 Travel Demand Management Actions

To help encourage other modes of transportation, below are several Travel Demand Management (TDM) strategies that would be recommended for the project. Since the project does not generate 100 or more net trips during the AM or PM peak hour period, it does not meet the requirements to submit an annual compliance report for the first five years following the completion of the project.

For bicycle strategies, it is recommended to provide bicycle parking or storage for the residents. The development proposes 27 long-term bicycle stalls and 6 short-term bicycle stalls. There are several future bicycle projects around the project site that are planned which would enhance the bicycle network. Other bicycle strategies such as the implementation of bicycle share stations would involve the developers coordinating with the appropriate agencies.

For transit strategies, the developers should coordinate with DTS if there is a desire to add additional bus stops in the vicinity of the site. There are several bus stops along this

stretch of Meheula Parkway that would allow residents access to TheBus system. However, there is not a bus stop directly fronting the development.

For pedestrian strategies, the development should provide sidewalks and accessible paths within the site that connect to the existing pedestrian facilities along Meheula Parkway.

5.0 REFERENCES

City and County of Honolulu Department of Transportation Services. 2019. “O‘ahu Bike Plan 2019 Update.” Honolulu, HI

City and County of Honolulu Department of Transportation Services. 2022. “O‘ahu Pedestrian Plan.” Honolulu, HI

Institute of Transportation Engineers. 2021. “220 Multifamily Housing (Low-Rise).” In *Trip Generation Manual 11th Edition*, Volume 2: Data Washington DC: Institute of Transportation Engineers.

State of Hawaii Department of Transportation. 2015, 2019. “Traffic Station Mapbook Island of O‘ahu – Traffic Count Worksheets.” Honolulu, HI

Transportation Research Board of the National Academics. 2022. “Urban Street Facilities.” In *Highway Capacity Manual*, 7th Edition, Washington, DC: Transportation Research Board.

Appendix A Transportation Count Worksheets

MILILANI HS WORKFORCE TEACHER HOUSING TRANSPORTATION ANALYSIS VEHICLE TURNING MOVEMENT FORM

LOCATION: Kamehameha Hwy & Meheula Pkwy
DATE: 09/11/2025 (Thursday)
TIME: 6:30a-8:30a
WEATHER: Clear
RECORDER: JY +CY
PHF 0.78

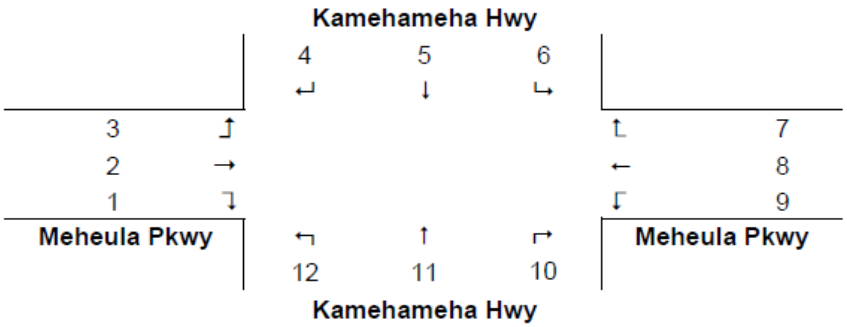

TIME PERIOD	MOVEMENT NUMBER											
	1	**2**	**3**	**4**	**5**	**6**	**7**	**8**	**9**	**10**	**11**	**12**
6:30-6:45a	9	31	26	18	43	21	20	15	16	11	66	3
6:45-7:00a	6	60	38	16	43	31	27	17	11	12	73	6
7:00-7:15a	9	82	48	10	51	26	30	29	11	22	61	2
7:15-7:30a	7	84	57	15	82	39	45	22	25	32	84	3
7:30-7:45a	9	115	64	21	61	51	66	56	40	49	88	5
7:45-8:00a	9	132	57	36	73	75	82	51	50	41	108	5
8:00-8:15a	4	45	35	27	68	49	76	91	35	19	95	9
8:15-8:30a	9	34	28	28	64	30	31	40	11	17	60	7
Peak Hour 7:30a-8:30a	31	326	184	112	266	205	255	238	136	126	351	26

Notes: Peak Hour from 7:15-8:15 was used for this intersection. Per DTS's TIA Guide, we are to use the second peak hour, which was from 7:30-8:30.

MILILANI HS WORKFORCE TEACHER HOUSING TRANSPORTATION ANALYSIS VEHICLE TURNING MOVEMENT FORM

LOCATION: Kamehameha Hwy & Meheula Pkwy
DATE: 09/16/2025 (Tuesday)
TIME: 2:00p-6:00p
WEATHER: Clear
RECORDER: JY +CY
PHF 0.93

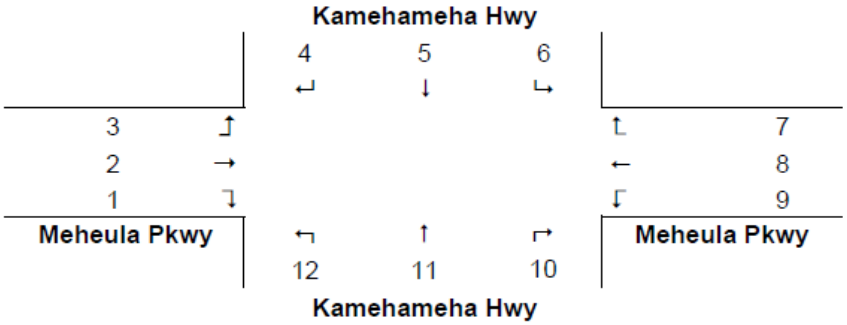

TIME PERIOD	MOVEMENT NUMBER											
	1	2	3	4	5	6	7	8	9	10	11	12
2:00-2:15p	9	68	29	17	62	47	48	47	26	13	59	16
2:15-2:30p	5	65	23	37	64	51	56	47	30	21	87	19
2:30-2:45p	12	60	23	26	54	48	46	72	19	17	87	13
2:45-3:00p	7	50	20	36	69	48	64	97	33	31	80	10
3:00-3:15p	8	40	26	41	74	58	79	91	28	26	72	6
3:15-3:30p	5	42	23	38	73	51	66	67	24	33	93	15
3:30-3:45p	8	59	23	44	83	65	70	73	27	30	72	19
3:45-4:00p	4	53	28	57	93	54	72	65	21	23	80	19
4:00-4:15p	7	66	34	38	64	56	69	75	36	29	98	24
4:15-4:30p	8	70	32	43	103	70	68	84	19	40	83	21
4:30-4:45p	4	66	40	35	76	54	70	85	47	32	102	21
4:45-5:00p	9	65	26	56	60	54	65	97	46	24	73	20
5:00-5:15p	3	64	33	38	79	53	66	75	44	25	112	15
5:15-5:30p	6	50	26	48	72	59	49	61	19	29	72	21
5:30-5:45p	7	58	31	47	63	58	56	96	26	25	93	15
5:45-6:00p	4	65	24	37	60	49	60	75	24	18	74	24
Peak Hour 4:30p-5:30p	22	245	125	177	287	220	250	318	156	110	359	77

Notes: Peak Hour from 4:00-5:00 was used for this intersection. Per DTS's TIA Guide, we are to use the second peak hour, which was from 4:30-5:30.

MILILANI HS WORKFORCE TEACHER HOUSING TRANSPORTATION ANALYSIS VEHICLE TURNING MOVEMENT FORM

LOCATION: Meheula Pkwy & Church Dwy
DATE: 09/24/2025 (Wednesday)
TIME: 6:30a-8:30a
WEATHER: Clear
RECORDER: CY
PHF 0.71

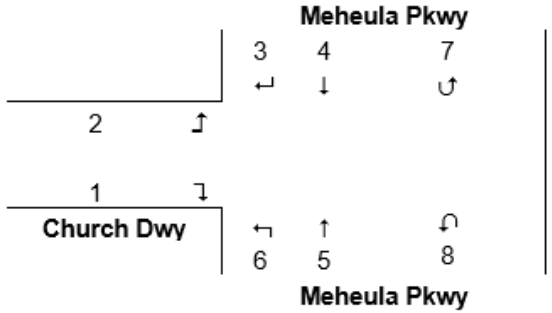

TIME PERIOD	MOVEMENT NUMBER							
	1	2	3	4	5	6	7	8
6:30-6:45a	5	5	6	72	45	6	1	1
6:45-7:00a	3	4	3	93	68	3	2	0
7:00-7:15a	1	1	4	128	86	3	0	0
7:15-7:30a	8	5	0	162	94	0	4	0
7:30-7:45a	3	3	0	228	135	1	2	0
7:45-8:00a	0	0	0	249	184	0	1	0
8:00-8:15a	0	0	0	120	142	0	0	0
8:15-8:30a	0	0	0	80	83	0	1	0
Peak Hour 7:30a-8:30a	3	3	0	677	544	1	4	0

Notes: Peak Hour from 7:15-8:15 was used for this intersection. Per DTS's TIA Guide, we are to use the second peak hour, which was from 7:30-8:30.

MILILANI HS WORKFORCE TEACHER HOUSING TRANSPORTATION ANALYSIS VEHICLE TURNING MOVEMENT FORM

LOCATION: Meheula Pkwy & Anania Dr
DATE: 09/24/2025 (Wednesday)
TIME: 12:30p-2:00p
WEATHER: Clear
RECORDER: CY
PHF 0.89

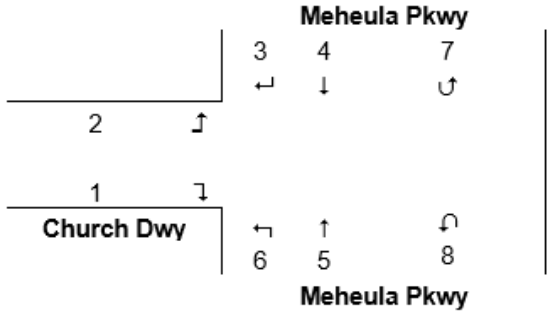

TIME PERIOD	MOVEMENT NUMBER							
	1	2	3	4	5	6	7	8
12:30-12:45p	0	0	0	140	117	0	8	0
12:45-1:00p	0	0	0	159	162	0	6	0
1:00-1:15p	0	0	0	183	153	0	6	1
1:15-1:30p	0	0	0	127	156	0	2	0
1:30-1:45p	0	1	2	102	154	1	5	0
1:45-2:00p	0	0	0	100	163	0	7	0
Peak Hour 12:30-1:30p	0	0	0	609	588	0	22	1

Notes:

MILILANI HS WORKFORCE TEACHER HOUSING TRANSPORTATION ANALYSIS VEHICLE TURNING MOVEMENT FORM

LOCATION: Meheula Pkwy & Anania Dr
DATE: 09/24/2025 (Wednesday)
TIME: 3:00p-6:00p
WEATHER: Clear
RECORDER: CY
PHF 0.87

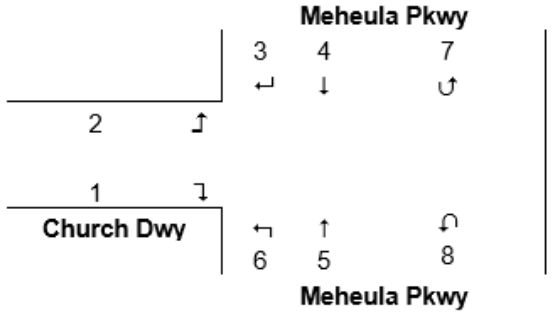

TIME PERIOD	MOVEMENT NUMBER							
	1	2	3	4	5	6	7	8
3:00-3:15p	0	0	0	105	145	2	7	2
3:15-3:30p	0	0	0	112	130	0	10	0
3:30-3:45p	1	0	1	102	151	1	6	1
3:45-4:00p	0	0	0	124	148	0	9	0
4:00-4:15p	1	0	1	128	154	0	5	0
4:15-4:30p	0	0	1	136	140	0	8	0
4:30-4:45p	0	0	0	143	142	0	2	0
4:45-5:00p	0	0	1	146	171	0	12	0
5:00-5:15p	0	1	0	121	142	0	1	0
5:15-5:30p	0	2	0	124	112	0	2	0
5:30-5:45p	1	0	0	131	143	1	3	1
5:45-6:00p	0	1	0	115	106	3	1	3
Peak Hour 4:30p-5:30p	0	3	1	534	567	0	17	0

Notes: Peak Hour from 4:00-5:00 was used for this intersection. Per DTS's TIA Guide, we are to use the second peak hour, which was from 4:30-5:30.

MILILANI HS WORKFORCE TEACHER HOUSING TRANSPORTATION ANALYSIS VEHICLE TURNING MOVEMENT FORM

LOCATION: Meheula Pkwy & Anania Dr
DATE: 09/24/2025 (Wednesday)
TIME: 6:30a-8:30a
WEATHER: Clear
RECORDER: JY
PHF 0.67

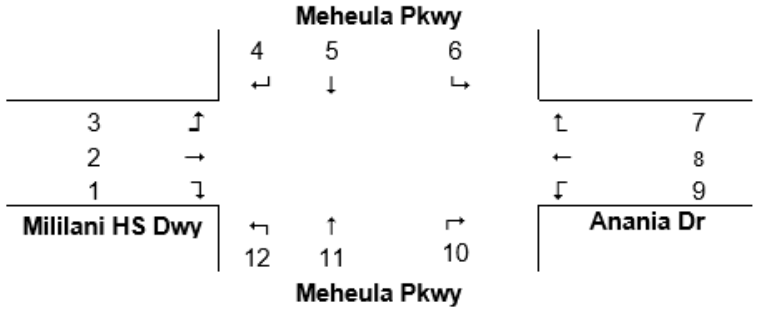

TIME PERIOD	MOVEMENT NUMBER											
	1	**2**	**3**	**4**	**5**	**6**	**7**	**8**	**9**	**10**	**11**	**12**
6:30-6:45a	1	0	0	4	41	4	10	0	10	4	72	1
6:45-7:00a	3	0	0	1	53	12	18	0	11	6	74	8
7:00-7:15a	9	0	8	11	68	11	23	3	13	8	106	16
7:15-7:30a	15	1	16	28	64	28	25	2	15	7	114	41
7:30-7:45a	22	1	25	41	60	18	22	10	20	5	139	54
7:45-8:00a	42	11	34	30	109	13	17	28	13	6	150	57
8:00-8:15a	12	2	4	2	94	23	11	2	5	10	86	7
8:15-8:30a	1	0	1	0	71	11	10	0	8	8	66	1
Peak Hour 7:30a-8:30a	77	14	64	73	334	65	60	40	46	29	441	119

Notes: Peak Hour from 7:15-8:15 was used for this intersection. Per DTS's TIA Guide, we are to use the second peak hour, which was from 7:30-8:30.

MILILANI HS WORKFORCE TEACHER HOUSING TRANSPORTATION ANALYSIS VEHICLE TURNING MOVEMENT FORM

LOCATION: Meheula Pkwy & Anania Dr
DATE: 09/24/2025 (Wednesday)
TIME: 12:30p-2:00p
WEATHER: Clear
RECORDER: JY
PHF 0.88

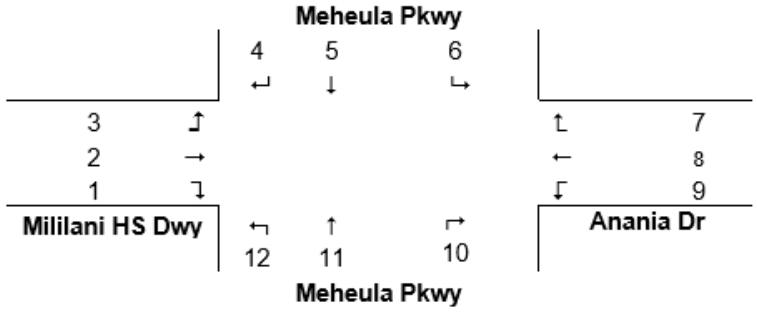

TIME PERIOD	MOVEMENT NUMBER											
	1	**2**	**3**	**4**	**5**	**6**	**7**	**8**	**9**	**10**	**11**	**12**
12:30-12:45p	2	1	5	15	122	7	12	2	7	8	111	20
12:45-1:00p	40	2	56	16	111	12	20	1	15	5	126	23
1:00-1:15p	9	3	24	14	126	16	16	3	15	14	155	14
1:15-1:30p	9	6	8	15	145	20	11	3	12	8	109	10
1:30-1:45p	6	1	7	3	156	25	16	2	4	12	85	4
1:45-2:00p	8	0	5	7	151	17	8	0	5	6	95	2
Peak Hour 12:30-1:30p	60	12	93	60	504	55	59	9	49	35	501	67

Notes:

MILILANI HS WORKFORCE TEACHER HOUSING TRANSPORTATION ANALYSIS VEHICLE TURNING MOVEMENT FORM

LOCATION: Meheula Pkwy & Anania Dr
DATE: 09/24/2025 (Wednesday)
TIME: 3:00p-6:00p
WEATHER: Clear
RECORDER: JY
PHF 0.87

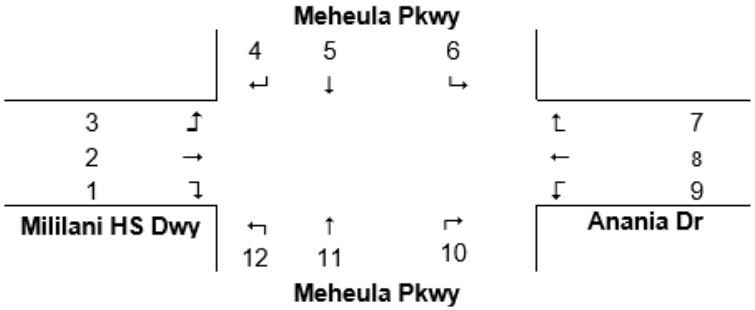

TIME PERIOD	MOVEMENT NUMBER											
	1	**2**	**3**	**4**	**5**	**6**	**7**	**8**	**9**	**10**	**11**	**12**
3:00-3:15p	19	0	9	17	117	19	12	0	15	16	71	11
3:15-3:30p	8	0	18	9	109	11	5	0	10	15	92	7
3:30-3:45p	7	1	3	3	135	20	9	0	13	9	85	5
3:45-4:00p	15	3	10	15	124	29	14	4	12	17	91	7
4:00-4:15p	5	1	4	9	143	19	19	1	12	15	113	4
4:15-4:30p	9	0	8	7	138	25	20	3	15	7	104	9
4:30-4:45p	2	1	4	2	138	15	13	1	13	17	123	3
4:45-5:00p	6	3	5	6	148	17	18	0	15	15	130	3
5:00-5:15p	4	0	5	8	131	20	8	0	8	13	100	7
5:15-5:30p	4	0	7	3	99	20	12	3	7	10	104	4
5:30-5:45p	7	3	5	8	133	20	16	0	9	15	106	10
5:45-6:00p	0	1	4	11	102	19	12	1	10	8	94	8
Peak Hour 4:30p-5:30p	16	4	21	19	516	72	51	4	43	55	457	17

Notes: Peak Hour from 4:00-5:00 was used for this intersection. Per DTS's TIA Guide, we are to use the second peak hour, which was from 4:30-5:30.

MILILANI HS WORKFORCE TEACHER HOUSING TRANSPORTATION ANALYSIS VEHICLE TURNING MOVEMENT FORM

LOCATION: Meheula Pkwy & Makaimoimo St
DATE: 09/09/2025 (Tuesday)
TIME: 6:30a-8:30a
WEATHER: Clear
RECORDER: CY
PHF 0.77

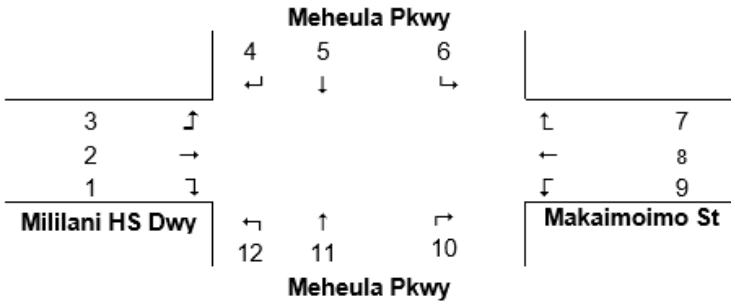

TIME PERIOD	MOVEMENT NUMBER											
	1	**2**	**3**	**4**	**5**	**6**	**7**	**8**	**9**	**10**	**11**	**12**
6:30-6:45a	0	0	1	2	32	12	17	1	15	26	53	1
6:45-7:00a	2	3	4	1	32	6	13	4	16	28	63	5
7:00-7:15a	7	3	18	2	57	17	18	11	27	34	75	14
7:15-7:30a	11	5	21	1	102	40	31	14	31	28	97	34
7:30-7:45a	15	4	25	5	110	60	40	14	25	56	120	37
7:45-8:00a	6	15	18	5	169	64	32	20	28	63	129	44
8:00-8:15a	16	9	23	3	169	61	22	1	24	61	66	14
8:15-8:30a	5	3	4	8	61	33	25	1	39	33	45	6
Peak Hour 7:30-8:30a	42	31	70	21	509	218	119	36	116	213	360	101

Notes: Peak Hour was from 7:15-8:15 and used for all intersections. Per DTS's TIA Guide, we are to use the second peak hour, which for this intersection was from 7:30-8:30. This peak hour was then used at the other intersections to get the volumes.

MILILANI HS WORKFORCE TEACHER HOUSING TRANSPORTATION ANALYSIS VEHICLE TURNING MOVEMENT FORM

LOCATION: Meheula Pkwy & Makaimoimo St
DATE: 09/09/2025 (Tuesday)
TIME: 2:00p-6:00p
WEATHER: Clear
RECORDER: CY
PHF 0.92

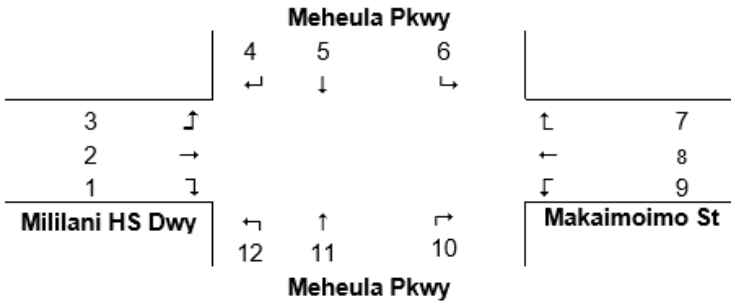

TIME PERIOD	MOVEMENT NUMBER											
	1	**2**	**3**	**4**	**5**	**6**	**7**	**8**	**9**	**10**	**11**	**12**
2:00-2:15p	0	2	4	0	83	38	38	2	60	53	61	4
2:15-2:30p	7	3	4	2	74	51	45	6	61	62	78	5
2:30-2:45p	4	25	9	2	98	64	37	5	36	65	70	8
2:45-3:00p	13	10	16	1	127	79	51	8	59	70	88	7
3:00-3:15p	8	9	22	2	126	76	68	4	62	54	65	3
3:15-3:30p	9	7	11	1	77	59	55	2	72	45	59	8
3:30-3:45p	5	4	13	1	100	74	56	1	58	62	61	4
3:45-4:00p	6	1	13	0	89	63	70	5	70	71	60	10
4:00-4:15p	10	3	17	2	102	62	72	4	65	64	72	7
4:15-4:30p	7	3	11	6	115	52	63	5	55	49	61	13
4:30-4:45p	20	10	18	5	123	67	45	11	56	69	74	19
4:45-5:00p	19	9	13	4	86	58	60	12	65	62	52	24
5:00-5:15p	2	4	8	6	97	48	62	9	72	57	55	20
5:15-5:30p	6	5	13	4	119	66	43	8	72	63	60	20
5:30-5:45p	5	6	11	3	73	57	53	4	67	66	63	18
5:45-6:00p	11	11	7	6	70	44	56	11	76	80	51	14
Peak Hour 4:30p-5:30p	47	28	52	19	425	239	210	40	265	251	241	83

Notes: Peak Hour was from 4:00-5:00 and used for all intersections. Per DTS's TIA Guide, we are to use the second peak hour, which for this intersection was from 4:30-5:30. This peak hour was then used at the other intersections to get the volumes.

MILILANI HS WORKFORCE TEACHER HOUSING TRANSPORTATION ANALYSIS VEHICLE TURNING MOVEMENT FORM

LOCATION: Meheula Pkwy & Lanikuhana Ave/Hookelewaa St
DATE: 09/09/2025 (Tuesday)
TIME: 6:30a-8:30a
WEATHER: Clear
RECORDER: JY
PHF 0.79

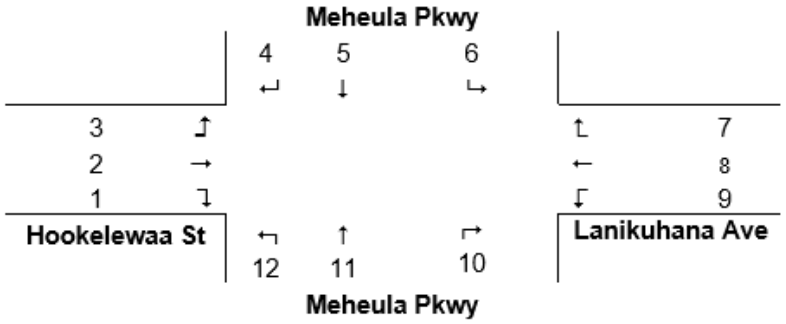

TIME PERIOD	MOVEMENT NUMBER											
	1	**2**	**3**	**4**	**5**	**6**	**7**	**8**	**9**	**10**	**11**	**12**
6:30-6:45a	10	11	8	0	37	47	77	9	2	7	50	6
6:45-7:00a	4	27	5	0	46	67	98	19	3	6	71	8
7:00-7:15a	9	23	21	6	108	81	104	27	6	2	97	7
7:15-7:30a	11	25	32	6	183	139	141	47	5	7	140	24
7:30-7:45a	13	24	45	11	256	143	151	44	12	8	192	26
7:45-8:00a	28	36	44	4	236	126	122	39	15	16	184	26
8:00-8:15a	27	43	30	2	154	135	124	13	8	7	145	8
8:15-8:30a	8	21	3	7	97	86	96	11	2	5	74	4
Peak Hour 7:30a-8:30a	76	124	122	24	743	490	493	107	37	36	595	64

Notes: Peak Hour from 7:15a-8:15a was used for this intersection. Per DTS's TIA Guide, we are to use the second peak hour, which was from 7:30-8:30.

MILILANI HS WORKFORCE TEACHER HOUSING TRANSPORTATION ANALYSIS VEHICLE TURNING MOVEMENT FORM

LOCATION: Meheula Pkwy & Lanikuhana Ave/Hookelewaa St
DATE: 09/09/2025 (Tuesday)
TIME: 2:00p-6:00p
WEATHER: Clear
RECORDER: JY
PHF 0.95

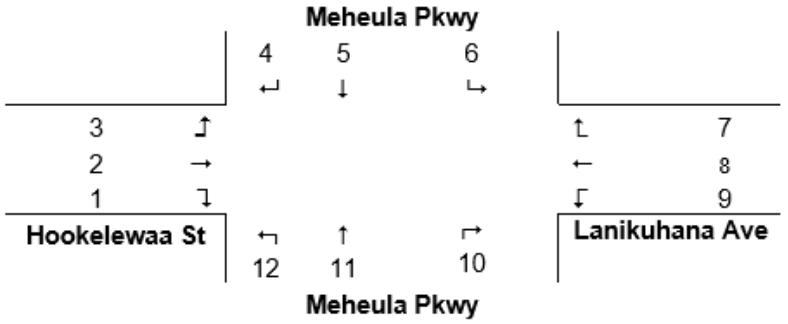

TIME PERIOD	MOVEMENT NUMBER											
	1	2	3	4	5	6	7	8	9	10	11	12
2:00-2:15p	10	52	9	6	105	141	127	11	8	5	73	15
2:15-2:30p	15	48	16	5	126	136	111	39	11	6	102	13
2:30-2:45p	13	36	10	9	99	114	92	16	5	8	90	12
2:45-3:00p	16	54	16	9	162	176	171	40	11	9	154	13
3:00-3:15p	23	51	12	7	185	204	146	27	3	4	150	17
3:15-3:30p	15	48	14	5	118	179	172	33	6	17	125	11
3:30-3:45p	15	48	8	8	160	176	142	16	4	4	115	13
3:45-4:00p	12	38	11	16	125	156	126	31	2	9	91	27
4:00-4:15p	17	23	5	15	145	150	161	30	1	13	117	35
4:15-4:30p	16	38	12	14	156	137	122	24	12	1	141	24
4:30-4:45p	19	44	6	15	189	153	161	27	6	8	119	16
4:45-5:00p	33	32	9	13	177	174	131	35	3	10	100	19
5:00-5:15p	16	41	7	17	173	177	146	26	6	4	119	10
5:15-5:30p	16	27	4	8	188	199	182	35	5	8	109	16
5:30-5:45p	11	29	2	5	149	155	128	33	4	9	106	13
5:45-6:00p	24	45	8	6	123	163	163	25	9	9	92	11
Peak Hour 4:30p-5:30p	84	144	26	53	727	703	620	123	20	30	447	61

Notes: Peak Hour from 4:00-5:00 was used for this intersection. Per DTS's TIA Guide, we are to use the second peak hour, which was from 4:30-5:30.

MILILANI HS WORKFORCE TEACHER HOUSING TRANSPORTATION ANALYSIS PEDESTRIAN TURNING MOVEMENT FORM

LOCATION: Kamehameha Hwy & Meheula Pkwy
DATE: 09/11/2025 (Thursday)
TIME: 6:30a-8:30a
WEATHER: Clear
RECORDER: JY +CY

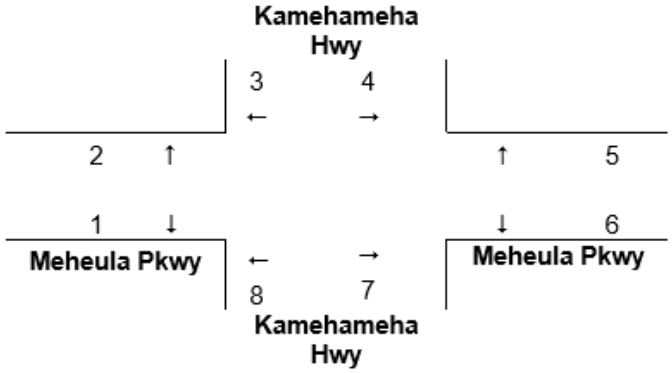

TIME PERIOD	MOVEMENT NUMBER							
	1	**2**	**3**	**4**	**5**	**6**	**7**	**8**
6:30-6:45a	0	0	0	1	0	2	0	0
6:45-7:00a	1	1	0	0	0	0	0	0
7:00-7:15a	0	1	0	0	1	0	0	1
7:15-7:30a	0	2	0	0	0	0	0	0
7:30-7:45a	3	4	0	0	0	0	0	0
7:45-8:00a	0	10	2	0	0	0	0	0
8:00-8:15a	0	0	1	0	0	2	0	0
8:15-8:30a	1	0	0	1	0	1	0	0
Peak Hour 7:30a-8:30a	4	14	3	1	0	3	0	0

Notes:

MILILANI HS WORKFORCE TEACHER HOUSING TRANSPORTATION ANALYSIS PEDESTRIAN TURNING MOVEMENT FORM

LOCATION: Kamehameha Hwy & Meheula Pkwy
DATE: 09/16/2025 (Tuesday)
TIME: 2:00p-6:00p
WEATHER: Clear
RECORDER: JY +CY

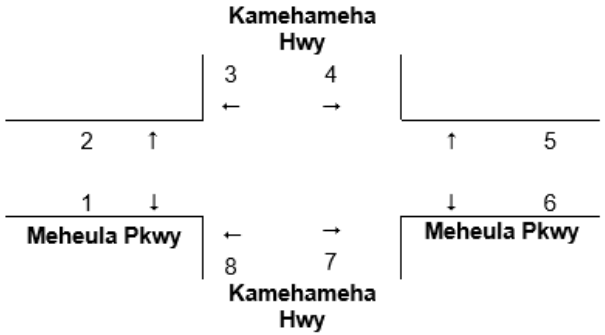

TIME PERIOD	MOVEMENT NUMBER							
	1	2	3	4	5	6	7	8
2:00-2:15p	0	0	0	0	0	0	0	0
2:15-2:30p	1	0	1	0	0	1	0	1
2:30-2:45p	0	0	0	0	0	0	0	0
2:45-3:00p	4	1	0	0	0	0	0	0
3:00-3:15p	1	0	0	1	0	0	0	0
3:15-3:30p	1	0	0	0	1	0	0	1
3:30-3:45p	1	0	1	0	0	0	0	0
3:45-4:00p	2	0	0	0	0	7	0	0
4:00-4:15p	0	0	0	1	1	0	0	0
4:15-4:30p	0	0	1	0	0	0	0	0
4:30-4:45p	1	0	0	0	0	0	0	0
4:45-5:00p	0	0	0	0	0	0	1	0
5:00-5:15p	0	0	0	0	0	0	0	0
5:15-5:30p	0	0	0	0	0	1	0	0
5:30-5:45p	3	0	0	0	0	0	1	0
5:45-6:00p	1	1	0	0	0	1	1	0
Peak Hour 4:30p-5:30p	1	0	0	0	0	1	1	0

Notes:

MILILANI HS WORKFORCE TEACHER HOUSING TRANSPORTATION ANALYSIS PEDESTRIAN TURNING MOVEMENT FORM

LOCATION: Meheula Pkwy & Church Dwy
DATE: 09/24/2025 (Wednesday)
TIME: 6:30a-8:30a
WEATHER: Clear
RECORDER: CY

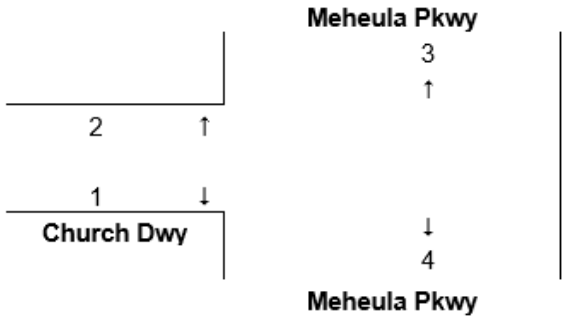

TIME PERIOD	MOVEMENT NUMBER			
	1	**2**	**3**	**4**
6:30-6:45a	5	2	4	1
6:45-7:00a	3	7	2	0
7:00-7:15a	1	1	1	0
7:15-7:30a	0	1	1	2
7:30-7:45a	0	0	4	0
7:45-8:00a	0	2	9	0
8:00-8:15a	1	0	0	0
8:15-8:30a	0	1	2	0
Peak Hour 7:30a-8:30a	1	3	15	0

Notes:

MILILANI HS WORKFORCE TEACHER HOUSING TRANSPORTATION ANALYSIS PEDESTRIAN TURNING MOVEMENT FORM

LOCATION: Meheula Pkwy & Anania Dr
DATE: 09/24/2025 (Wednesday)
TIME: 12:30p-2:00p
WEATHER: Clear
RECORDER: CY

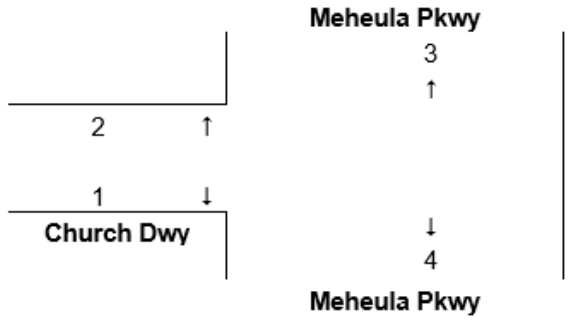

TIME PERIOD	MOVEMENT NUMBER			
	1	2	3	4
12:30-12:45p	0	1	0	1
12:45-1:00p	2	0	0	9
1:00-1:15p	0	1	1	8
1:15-1:30p	1	0	1	3
1:30-1:45p	3	0	0	3
1:45-2:00p	0	0	0	1
Peak Hour 12:30-1:30p	3	2	2	21

Notes:

MILILANI HS WORKFORCE TEACHER HOUSING TRANSPORTATION ANALYSIS PEDESTRIAN TURNING MOVEMENT FORM

LOCATION: Meheula Pkwy & Anania Dr
DATE: 09/24/2025 (Wednesday)
TIME: 3:00p-6:00p
WEATHER: Clear
RECORDER: CY

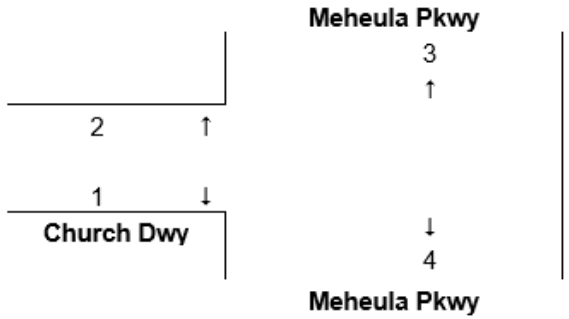

TIME PERIOD	MOVEMENT NUMBER			
	1	2	3	4
3:00-3:15p	0	0	0	0
3:15-3:30p	0	0	0	1
3:30-3:45p	1	2	0	0
3:45-4:00p	1	1	0	0
4:00-4:15p	0	0	0	0
4:15-4:30p	1	0	0	0
4:30-4:45p	1	0	0	2
4:45-5:00p	0	0	1	1
5:00-5:15p	0	0	0	0
5:15-5:30p	0	0	1	0
5:30-5:45p	3	0	1	2
5:45-6:00p	0	0	0	2
Peak Hour 4:30p-5:30p	1	0	2	3

Notes:

MILILANI HS WORKFORCE TEACHER HOUSING TRANSPORTATION ANALYSIS PEDESTRIAN TURNING MOVEMENT FORM

LOCATION: Meheula Pkwy & Anania Dr
DATE: 09/24/2025 (Wednesday)
TIME: 6:30a-8:30a
WEATHER: Clear
RECORDER: JY

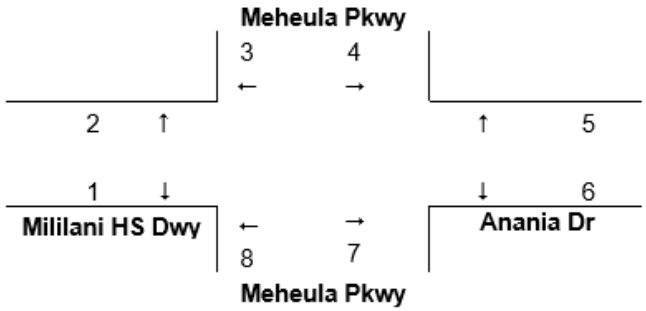

TIME PERIOD	MOVEMENT NUMBER							
	1	**2**	**3**	**4**	**5**	**6**	**7**	**8**
6:30-6:45a	1	0	1	1	0	0	3	2
6:45-7:00a	0	0	0	1	1	0	5	1
7:00-7:15a	0	1	3	1	1	0	1	0
7:15-7:30a	0	32	0	1	3	2	2	1
7:30-7:45a	0	7	0	0	8	0	0	0
7:45-8:00a	1	20	0	0	11	0	1	0
8:00-8:15a	0	2	0	0	3	0	0	0
8:15-8:30a	0	0	0	2	0	1	0	0
Peak Hour 7:30a-8:30a	1	29	0	2	22	1	1	0

Notes:

MILILANI HS WORKFORCE TEACHER HOUSING TRANSPORTATION ANALYSIS PEDESTRIAN TURNING MOVEMENT FORM

LOCATION: Meheula Pkwy & Anania Dr
DATE: 09/24/2025 (Wednesday)
TIME: 12:30p-2:00p
WEATHER: Clear
RECORDER: JY

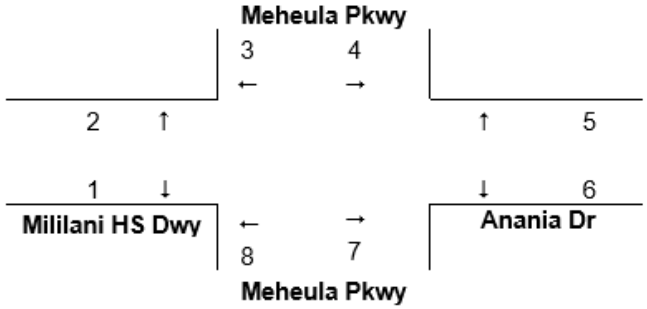

TIME PERIOD	MOVEMENT NUMBER							
	1	2	3	4	5	6	7	8
12:30-12:45p	0	1	1	1	0	0	0	0
12:45-1:00p	17	0	2	0	1	9	1	0
1:00-1:15p	5	0	1	0	0	9	1	0
1:15-1:30p	1	2	2	0	0	3	0	3
1:30-1:45p	0	0	1	0	0	2	0	1
1:45-2:00p	2	0	2	0	0	0	0	1
Peak Hour 12:30-1:30p	23	3	6	1	1	21	2	3

Notes:

MILILANI HS WORKFORCE TEACHER HOUSING TRANSPORTATION ANALYSIS PEDESTRIAN TURNING MOVEMENT FORM

LOCATION: Meheula Pkwy & Anania Dr
DATE: 09/24/2025 (Wednesday)
TIME: 3:00p-6:00p
WEATHER: Clear
RECORDER: JY

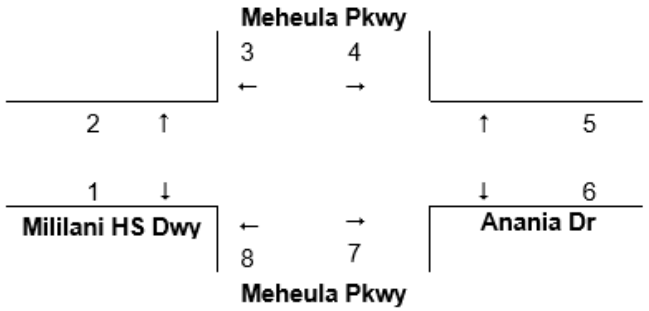

TIME PERIOD	MOVEMENT NUMBER							
	1	2	3	4	5	6	7	8
3:00-3:15p	0	0	0	0	0	0	1	0
3:15-3:30p	0	0	1	0	1	0	0	0
3:30-3:45p	0	0	0	0	1	0	1	0
3:45-4:00p	0	0	0	0	0	0	1	0
4:00-4:15p	0	0	0	0	0	0	0	1
4:15-4:30p	0	0	0	0	0	0	0	1
4:30-4:45p	1	0	0	0	1	0	0	0
4:45-5:00p	0	1	1	2	0	1	0	0
5:00-5:15p	2	0	2	0	0	1	0	0
5:15-5:30p	0	0	0	1	0	1	0	0
5:30-5:45p	2	0	3	1	1	1	0	1
5:45-6:00p	0	0	2	0	0	1	0	2
Peak Hour 4:30p-5:30p	3	1	3	3	1	3	0	0

Notes:

MILILANI HS WORKFORCE TEACHER HOUSING TRANSPORTATION ANALYSIS PEDESTRIAN TURNING MOVEMENT FORM

LOCATION: Meheula Pkwy & Makaimoimo St
DATE: 09/09/2025 (Tuesday)
TIME: 6:30a-8:30a
WEATHER: Clear
RECORDER: CY

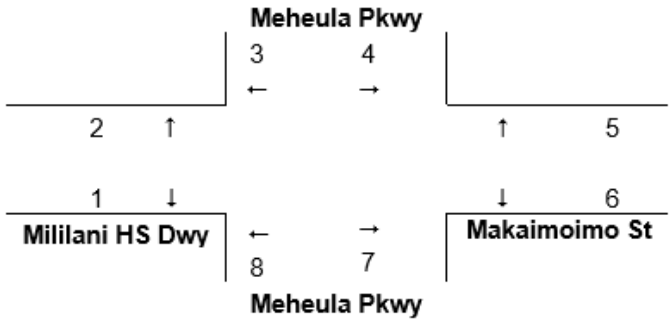

TIME PERIOD	MOVEMENT NUMBER							
	1	**2**	**3**	**4**	**5**	**6**	**7**	**8**
6:30-6:45a	0	0	0	1	1	0	2	0
6:45-7:00a	0	0	2	2	6	0	2	0
7:00-7:15a	0	0	0	0	7	1	0	1
7:15-7:30a	2	4	0	2	16	6	0	0
7:30-7:45a	0	11	0	4	52	2	1	1
7:45-8:00a	0	15	0	0	99	0	1	2
8:00-8:15a	0	8	0	0	31	0	3	0
8:15-8:30a	0	0	1	0	1	0	0	1
Peak Hour 7:30-8:30a	0	34	1	4	183	2	5	4

Notes:

MILILANI HS WORKFORCE TEACHER HOUSING TRANSPORTATION ANALYSIS PEDESTRIAN TURNING MOVEMENT FORM

LOCATION: Meheula Pkwy & Makaimoimo St
DATE: 09/09/2025 (Tuesday)
TIME: 2:00p-6:00p
WEATHER: Clear
RECORDER: CY

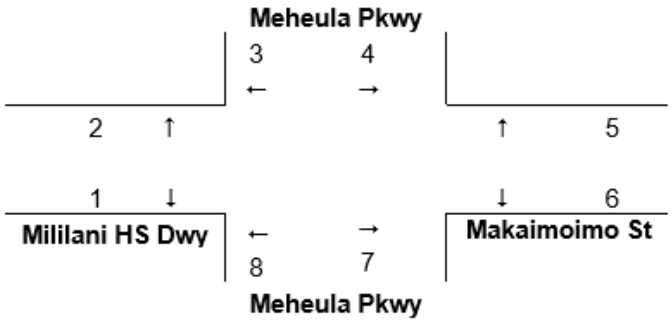

TIME PERIOD	MOVEMENT NUMBER							
	1	**2**	**3**	**4**	**5**	**6**	**7**	**8**
2:00-2:15p	1	0	1	0	1	0	1	0
2:15-2:30p	0	0	0	1	2	3	0	2
2:30-2:45p	79	0	0	11	7	307	3	11
2:45-3:00p	18	1	1	3	23	83	6	3
3:00-3:15p	6	1	2	3	27	25	2	5
3:15-3:30p	3	0	0	1	18	28	6	1
3:30-3:45p	1	1	0	2	14	6	1	6
3:45-4:00p	0	6	0	1	7	5	2	3
4:00-4:15p	0	0	2	0	17	7	0	1
4:15-4:30p	2	0	0	1	4	10	0	3
4:30-4:45p	1	1	1	3	11	13	2	0
4:45-5:00p	0	1	0	1	37	0	5	0
5:00-5:15p	2	1	0	1	13	10	0	1
5:15-5:30p	0	4	0	0	5	15	0	0
5:30-5:45p	1	0	1	4	7	16	4	3
5:45-6:00p	1	1	0	0	14	5	0	0
Peak Hour 4:30p-5:30p	3	7	1	5	66	38	7	1

Notes:

MILILANI HS WORKFORCE TEACHER HOUSING TRANSPORTATION ANALYSIS PEDESTRIAN TURNING MOVEMENT FORM

LOCATION: Meheula Pkwy & Lanikuhana Ave/Hookelewaa St
DATE: 09/09/2025 (Tuesday)
TIME: 6:30a-8:30a
WEATHER: Clear
RECORDER: JY

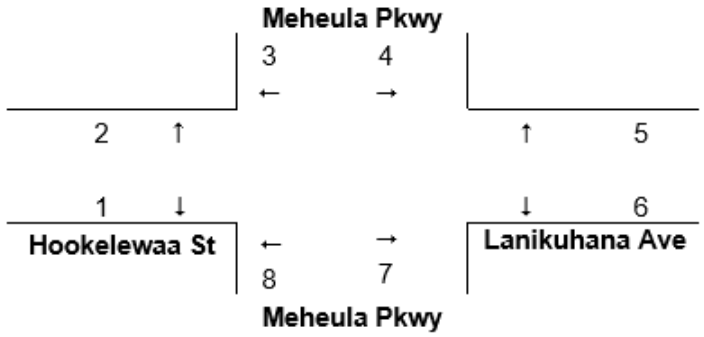

TIME PERIOD	MOVEMENT NUMBER							
	1	**2**	**3**	**4**	**5**	**6**	**7**	**8**
6:30-6:45a	1	2	2	0	1	2	0	0
6:45-7:00a	4	3	0	0	0	2	0	4
7:00-7:15a	1	1	1	0	1	1	0	3
7:15-7:30a	1	2	1	0	2	4	0	3
7:30-7:45a	6	8	13	1	0	4	3	14
7:45-8:00a	13	3	12	0	0	14	2	14
8:00-8:15a	0	0	0	0	4	2	0	2
8:15-8:30a	0	1	1	0	1	1	0	2
Peak Hour 7:30a-8:30a	19	12	26	1	5	21	5	32

Notes:

MILILANI HS WORKFORCE TEACHER HOUSING TRANSPORTATION ANALYSIS PEDESTRIAN TURNING MOVEMENT FORM

LOCATION: Meheula Pkwy & Lanikuhana Ave/Hookelewaa St
DATE: 09/09/2025 (Tuesday)
TIME: 2:00p-6:00p
WEATHER: Clear
RECORDER: JY

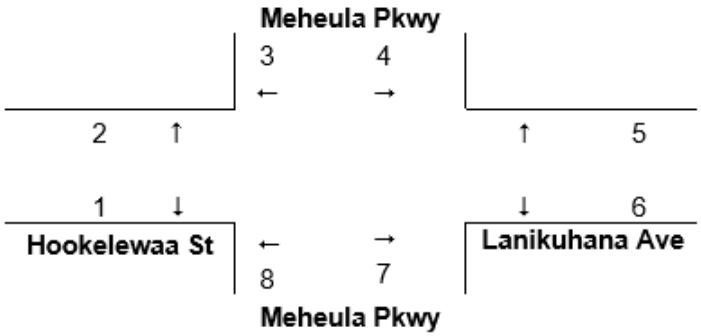

TIME PERIOD	MOVEMENT NUMBER							
	1	**2**	**3**	**4**	**5**	**6**	**7**	**8**
2:00-2:15p	0	0	1	0	0	0	1	2
2:15-2:30p	0	0	0	0	0	0	3	0
2:30-2:45p	0	11	0	0	3	1	4	1
2:45-3:00p	1	15	0	0	9	0	3	0
3:00-3:15p	0	2	0	0	3	2	0	0
3:15-3:30p	0	7	0	0	1	0	0	1
3:30-3:45p	0	0	0	0	2	0	4	1
3:45-4:00p	0	0	0	1	0	0	4	0
4:00-4:15p	0	1	0	0	0	1	1	1
4:15-4:30p	0	0	0	0	4	1	3	0
4:30-4:45p	1	0	0	1	1	2	3	0
4:45-5:00p	1	0	0	2	4	1	1	3
5:00-5:15p	0	1	0	1	1	2	1	1
5:15-5:30p	0	0	0	1	3	0	1	1
5:30-5:45p	1	1	0	1	1	0	0	0
5:45-6:00p	2	0	0	0	1	2	1	0
Peak Hour 4:30p-5:30p	2	1	0	5	9	5	6	5

Notes:

MILILANI HS WORKFORCE TEACHER HOUSING TRANSPORTATION ANALYSIS BICYCLE TURNING MOVEMENT FORM

LOCATION: Kamehameha Hwy & Meheula Pkwy
DATE: 09/11/2025 (Thursday)
TIME: 6:30a-8:30a
WEATHER: Clear
RECORDER: JY +CY

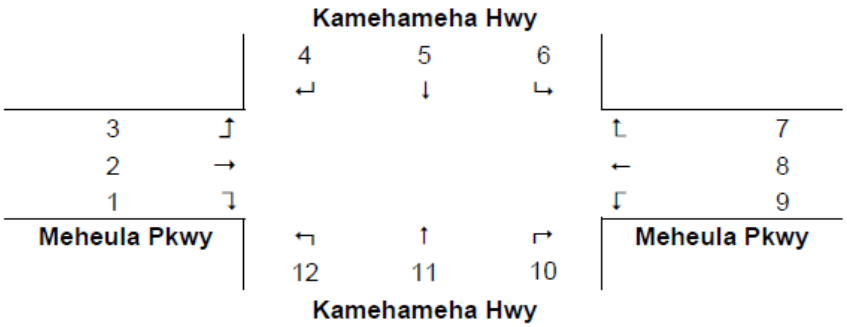

TIME PERIOD	MOVEMENT NUMBER											
	1	2	3	4	5	6	7	8	9	10	11	12
6:30-6:45a	0	0	0	0	0	0	0	0	0	0	0	0
6:45-7:00a	0	1	0	0	0	0	0	0	0	0	0	0
7:00-7:15a	0	1	0	0	0	0	0	0	0	0	0	0
7:15-7:30a	0	0	0	1	0	0	0	0	0	0	1	0
7:30-7:45a	0	3	0	0	0	0	0	0	0	0	0	0
7:45-8:00a	0	1	0	0	0	0	0	0	0	0	0	0
8:00-8:15a	0	0	0	0	0	0	0	0	0	0	0	0
8:15-8:30a	0	0	0	0	0	0	1	0	0	0	0	0
Peak Hour 7:30a-8:30a	0	4	0	0	0	0	1	0	0	0	0	0

Notes:

MILILANI HS WORKFORCE TEACHER HOUSING TRANSPORTATION ANALYSIS BICYCLE TURNING MOVEMENT FORM

LOCATION: Kamehameha Hwy & Meheula Pkwy
DATE: 09/16/2025 (Tuesday)
TIME: 2:00p-6:00p
WEATHER: Clear
RECORDER: JY +CY

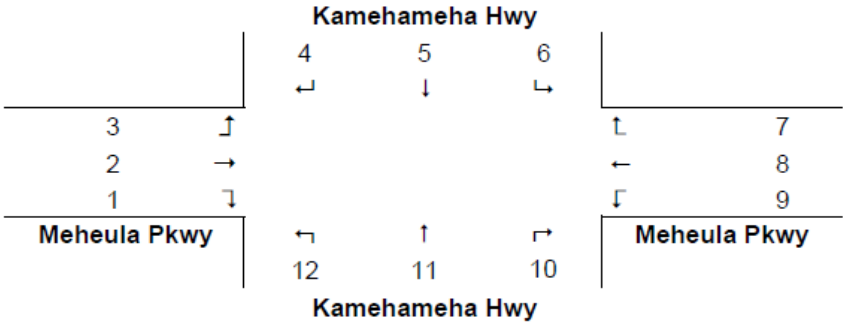

TIME PERIOD	MOVEMENT NUMBER											
	1	2	3	4	5	6	7	8	9	10	11	12
2:00-2:15p	0	0	0	0	0	1	0	0	0	0	0	0
2:15-2:30p	0	0	0	0	0	0	1	0	0	0	0	0
2:30-2:45p	0	0	0	0	0	0	0	0	0	0	0	0
2:45-3:00p	0	0	0	0	0	0	0	0	0	0	1	0
3:00-3:15p	0	0	0	0	0	0	0	1	0	0	0	0
3:15-3:30p	0	0	0	1	0	0	0	0	0	0	0	0
3:30-3:45p	0	0	0	0	0	0	0	2	0	0	1	0
3:45-4:00p	0	1	0	0	0	0	0	0	0	0	1	0
4:00-4:15p	0	0	0	0	0	0	0	0	0	0	0	0
4:15-4:30p	0	0	0	0	0	0	0	0	0	0	0	0
4:30-4:45p	0	0	0	0	0	0	0	0	0	0	0	0
4:45-5:00p	0	1	0	0	0	0	0	1	0	0	0	0
5:00-5:15p	0	0	0	0	0	0	0	1	0	0	0	0
5:15-5:30p	0	0	0	0	0	0	1	0	0	0	0	0
5:30-5:45p	0	0	0	0	0	0	1	1	0	0	0	0
5:45-6:00p	0	0	0	0	0	0	0	0	0	0	0	0
Peak Hour 4:30p-5:30p	0	1	0	0	0	0	1	2	0	0	0	0

Notes:

MILILANI HS WORKFORCE TEACHER HOUSING TRANSPORTATION ANALYSIS BICYCLE TURNING MOVEMENT FORM

LOCATION: Meheula Pkwy & Church Dwy
DATE: 09/24/2025 (Wednesday)
TIME: 6:30a-8:30a
WEATHER: Clear
RECORDER: CY

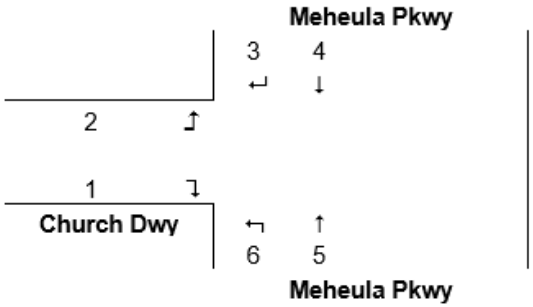

TIME PERIOD	MOVEMENT NUMBER					
	1	2	3	4	5	6
6:30-6:45a	0	0	0	1	0	0
6:45-7:00a	0	0	0	0	0	0
7:00-7:15a	0	0	0	3	0	0
7:15-7:30a	0	0	0	1	0	0
7:30-7:45a	0	0	0	3	0	0
7:45-8:00a	0	0	0	1	0	0
8:00-8:15a	0	0	0	0	0	0
8:15-8:30a	0	0	0	0	0	0
Peak Hour 7:30a-8:30a	0	0	0	4	0	0

Notes:

MILILANI HS WORKFORCE TEACHER HOUSING TRANSPORTATION ANALYSIS BICYCLE TURNING MOVEMENT FORM

LOCATION: Meheula Pkwy & Anania Dr
DATE: 09/24/2025 (Wednesday)
TIME: 12:30p-2:00p
WEATHER: Clear
RECORDER: CY

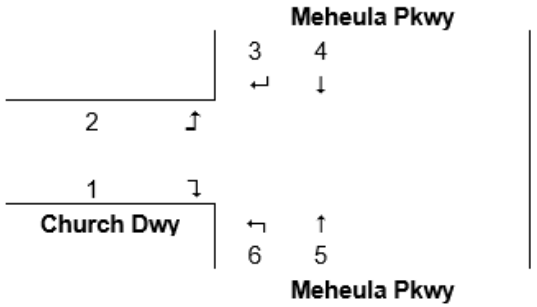

TIME PERIOD	MOVEMENT NUMBER					
	1	2	3	4	5	6
12:30-12:45p	0	0	0	0	0	0
12:45-1:00p	0	0	0	0	0	0
1:00-1:15p	0	0	0	0	0	0
1:15-1:30p	0	0	0	0	0	0
1:30-1:45p	0	0	0	0	0	0
1:45-2:00p	0	0	0	0	0	0
Peak Hour 12:30-1:30p	0	0	0	0	0	0

Notes:

MILILANI HS WORKFORCE TEACHER HOUSING TRANSPORTATION ANALYSIS BICYCLE TURNING MOVEMENT FORM

LOCATION: Meheula Pkwy & Anania Dr
DATE: 09/24/2025 (Wednesday)
TIME: 3:00p-6:00p
WEATHER: Clear
RECORDER: CY

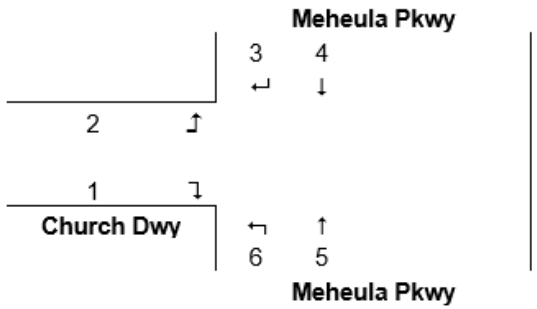

TIME PERIOD	MOVEMENT NUMBER					
	1	2	3	4	5	6
3:00-3:15p	0	0	0	0	0	0
3:15-3:30p	0	0	0	0	0	0
3:30-3:45p	0	0	0	0	0	0
3:45-4:00p	0	0	0	0	0	0
4:00-4:15p	0	0	0	0	0	0
4:15-4:30p	0	0	0	0	0	0
4:30-4:45p	0	0	0	0	0	0
4:45-5:00p	0	0	0	0	0	0
5:00-5:15p	0	0	0	0	0	0
5:15-5:30p	0	0	0	0	0	0
5:30-5:45p	0	0	0	0	0	0
5:45-6:00p	0	0	0	0	0	0
Peak Hour 4:30p-5:30p	0	0	0	0	0	0

Notes:

MILILANI HS WORKFORCE TEACHER HOUSING TRANSPORTATION ANALYSIS BICYCLE TURNING MOVEMENT FORM

LOCATION: Meheula Pkwy & Anania Dr
DATE: 09/24/2025 (Wednesday)
TIME: 6:30a-8:30a
WEATHER: Clear
RECORDER: JY

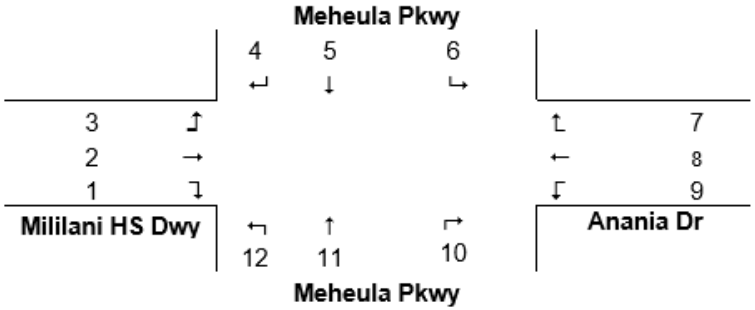

TIME PERIOD	MOVEMENT NUMBER											
	1	**2**	**3**	**4**	**5**	**6**	**7**	**8**	**9**	**10**	**11**	**12**
6:30-6:45a	0	0	0	0	0	0	0	0	0	0	1	0
6:45-7:00a	0	0	0	0	0	0	0	0	0	0	0	0
7:00-7:15a	0	0	0	0	0	0	0	0	0	1	0	2
7:15-7:30a	0	0	0	0	0	0	0	0	0	0	0	1
7:30-7:45a	0	0	0	0	0	0	0	0	0	0	2	0
7:45-8:00a	0	0	0	0	0	0	0	2	0	0	3	0
8:00-8:15a	0	0	0	0	1	0	0	0	0	0	0	0
8:15-8:30a	0	0	0	0	0	0	0	0	0	0	0	0
Peak Hour 7:30a-8:30a	0	0	0	0	1	0	0	2	0	0	5	0

Notes:

MILILANI HS WORKFORCE TEACHER HOUSING TRANSPORTATION ANALYSIS BICYCLE TURNING MOVEMENT FORM

LOCATION: Meheula Pkwy & Anania Dr
DATE: 09/24/2025 (Wednesday)
TIME: 12:30p-2:00p
WEATHER: Clear
RECORDER: JY

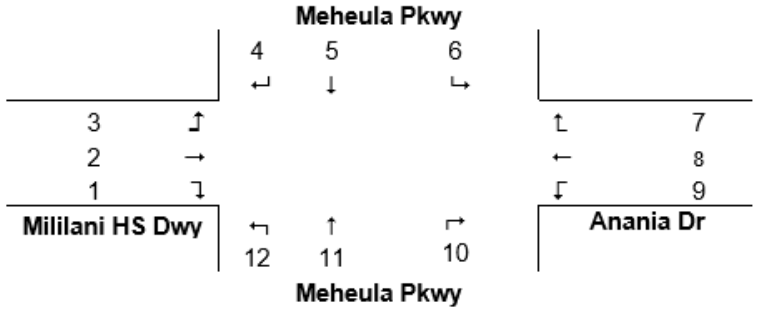

TIME PERIOD	MOVEMENT NUMBER											
	1	2	3	4	5	6	7	8	9	10	11	12
12:30-12:45p	0	0	0	0	0	0	0	0	0	0	0	0
12:45-1:00p	2	4	0	0	1	0	0	0	0	0	0	0
1:00-1:15p	1	0	0	0	0	0	0	0	0	0	0	0
1:15-1:30p	0	0	0	0	0	0	0	0	0	0	0	0
1:30-1:45p	0	0	0	0	0	0	0	0	0	0	0	0
1:45-2:00p	0	0	0	0	0	0	1	0	0	1	0	0
Peak Hour 12:30-1:30p	3	4	0	0	1	0	0	0	0	0	0	0

Notes:

MILILANI HS WORKFORCE TEACHER HOUSING TRANSPORTATION ANALYSIS BICYCLE TURNING MOVEMENT FORM

LOCATION: Meheula Pkwy & Anania Dr
DATE: 09/24/2025 (Wednesday)
TIME: 3:00p-6:00p
WEATHER: Clear
RECORDER: JY

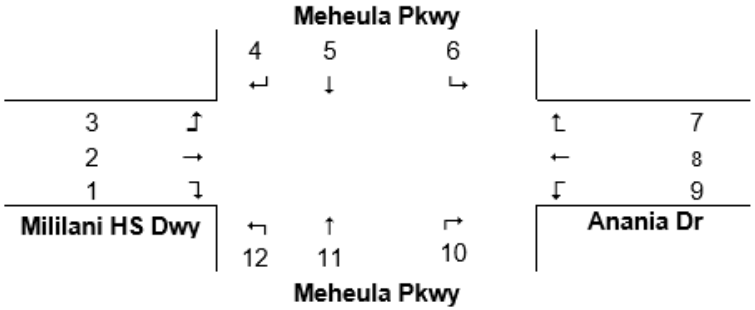

TIME PERIOD	MOVEMENT NUMBER											
	1	2	3	4	5	6	7	8	9	10	11	12
3:00-3:15p	2	1	0	0	0	0	0	0	0	0	0	0
3:15-3:30p	0	0	0	0	0	0	0	1	0	0	0	0
3:30-3:45p	0	0	0	0	1	0	0	0	0	0	0	0
3:45-4:00p	0	1	0	0	0	0	0	0	0	0	0	0
4:00-4:15p	0	0	0	0	0	0	0	0	0	0	0	0
4:15-4:30p	0	0	0	0	0	0	0	0	0	0	0	0
4:30-4:45p	0	0	0	0	0	0	0	0	0	0	0	0
4:45-5:00p	0	0	0	0	0	0	0	0	0	0	0	0
5:00-5:15p	0	0	0	0	0	0	0	1	0	0	0	0
5:15-5:30p	0	0	0	0	0	0	0	0	0	1	0	0
5:30-5:45p	0	0	0	0	1	0	0	0	0	0	0	0
5:45-6:00p	0	0	0	0	0	0	1	1	1	0	1	0
Peak Hour 4:30p-5:30p	0	0	0	0	0	0	0	1	0	1	0	0

Notes:

MILILANI HS WORKFORCE TEACHER HOUSING TRANSPORTATION ANALYSIS BICYCLE TURNING MOVEMENT FORM

LOCATION: Meheula Pkwy & Makaimoimo St
DATE: 09/09/2025 (Tuesday)
TIME: 6:30a-8:30a
WEATHER: Clear
RECORDER: CY

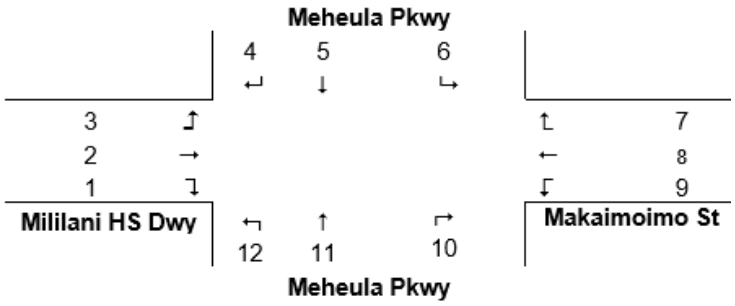

TIME PERIOD	MOVEMENT NUMBER											
	1	2	3	4	5	6	7	8	9	10	11	12
6:30-6:45a	0	0	0	0	0	0	0	0	0	1	0	0
6:45-7:00a	0	0	0	0	0	0	0	1	0	0	1	0
7:00-7:15a	0	0	0	0	0	0	0	0	0	0	0	0
7:15-7:30a	0	0	0	0	0	0	0	0	0	0	0	0
7:30-7:45a	0	0	0	0	0	0	0	0	0	0	5	0
7:45-8:00a	0	0	0	0	0	0	0	1	0	0	0	0
8:00-8:15a	0	0	0	0	0	0	0	0	0	0	1	0
8:15-8:30a	0	0	0	1	0	0	0	0	0	0	0	0
Peak Hour 7:30-8:30a	0	0	0	1	0	0	0	1	0	0	6	0

Notes:

MILILANI HS WORKFORCE TEACHER HOUSING TRANSPORTATION ANALYSIS BICYCLE TURNING MOVEMENT FORM

LOCATION: Meheula Pkwy & Makaimoimo St
DATE: 09/09/2025 (Tuesday)
TIME: 2:00p-6:00p
WEATHER: Clear
RECORDER: CY

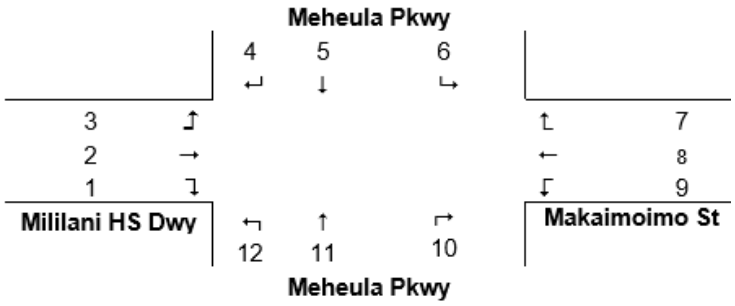

TIME PERIOD	MOVEMENT NUMBER											
	1	2	3	4	5	6	7	8	9	10	11	12
2:00-2:15p	0	0	0	0	0	0	0	0	0	0	0	0
2:15-2:30p	0	0	0	0	0	0	0	0	0	0	0	0
2:30-2:45p	0	0	0	0	0	0	0	0	0	0	0	0
2:45-3:00p	0	0	0	0	0	0	0	0	0	0	0	0
3:00-3:15p	0	0	0	0	0	0	0	0	0	0	0	0
3:15-3:30p	0	0	0	0	0	0	0	0	0	0	0	0
3:30-3:45p	0	1	0	0	1	0	0	0	0	0	0	0
3:45-4:00p	0	0	0	0	0	0	0	2	0	0	0	0
4:00-4:15p	0	0	0	0	0	0	0	0	0	0	0	0
4:15-4:30p	0	0	0	0	0	0	0	0	0	0	0	0
4:30-4:45p	0	0	0	0	1	0	0	0	0	0	0	0
4:45-5:00p	0	1	0	0	0	0	0	0	0	0	0	0
5:00-5:15p	0	0	0	0	0	0	0	0	0	0	0	0
5:15-5:30p	0	0	0	0	1	0	0	0	0	0	0	0
5:30-5:45p	0	1	0	0	1	0	0	0	0	0	1	0
5:45-6:00p	0	0	0	0	0	0	0	0	0	0	0	0
Peak Hour 4:30p-5:30p	0	1	0	0	2	0	0	0	0	0	0	0

Notes:

MILILANI HS WORKFORCE TEACHER HOUSING TRANSPORTATION ANALYSIS BICYCLE TURNING MOVEMENT FORM

LOCATION: Meheula Pkwy & Lanikuhana Ave/Hookelewaa St
DATE: 09/09/2025 (Tuesday)
TIME: 6:30a-8:30a
WEATHER: Clear
RECORDER: JY

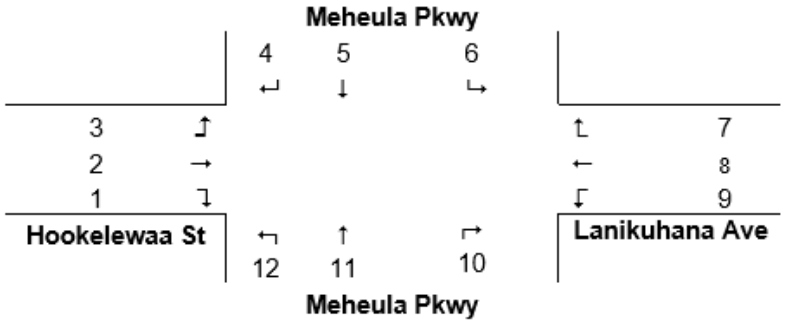

TIME PERIOD	MOVEMENT NUMBER											
	1	2	3	4	5	6	7	8	9	10	11	12
6:30-6:45a	0	0	0	0	1	0	0	0	1	0	0	0
6:45-7:00a	0	0	0	0	0	0	0	0	0	0	0	0
7:00-7:15a	0	0	0	0	0	0	1	0	0	0	0	0
7:15-7:30a	1	0	0	0	0	0	0	0	0	0	0	0
7:30-7:45a	0	0	0	1	1	0	0	2	0	0	1	0
7:45-8:00a	0	0	0	0	2	0	0	2	0	0	2	0
8:00-8:15a	0	1	0	0	0	1	0	0	0	0	0	0
8:15-8:30a	0	0	0	0	1	0	0	0	0	0	0	0
Peak Hour 7:30a-8:30a	0	1	0	1	4	1	0	4	0	0	3	0

Notes:

MILILANI HS WORKFORCE TEACHER HOUSING TRANSPORTATION ANALYSIS BICYCLE TURNING MOVEMENT FORM

LOCATION: Meheula Pkwy & Lanikuhana Ave/Hookelewaa St
DATE: 09/09/2025 (Tuesday)
TIME: 2:00p-6:00p
WEATHER: Clear
RECORDER: JY

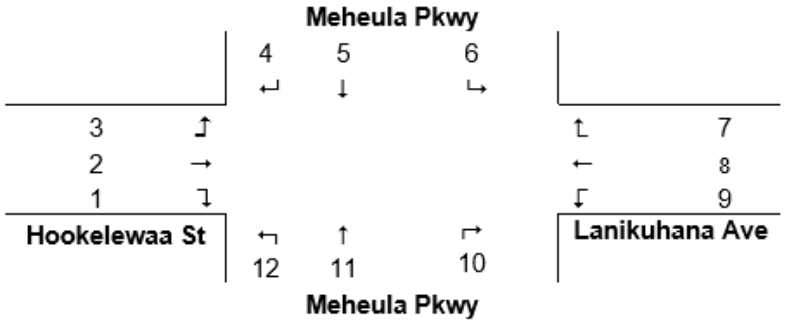

TIME PERIOD	MOVEMENT NUMBER											
	1	2	3	4	5	6	7	8	9	10	11	12
2:00-2:15p	0	0	0	0	1	0	0	0	0	0	0	0
2:15-2:30p	0	0	0	0	0	0	0	0	0	0	0	0
2:30-2:45p	0	2	0	0	0	0	0	0	0	0	5	0
2:45-3:00p	0	3	0	0	0	0	0	0	0	0	2	0
3:00-3:15p	0	0	0	0	3	0	0	0	0	0	2	0
3:15-3:30p	0	0	0	0	2	0	0	0	0	0	0	0
3:30-3:45p	0	0	0	0	0	0	0	1	0	0	1	0
3:45-4:00p	0	0	0	0	0	0	1	0	0	0	0	0
4:00-4:15p	0	0	0	0	0	0	0	0	0	0	0	0
4:15-4:30p	0	0	0	0	0	0	1	0	0	0	2	0
4:30-4:45p	0	0	0	0	0	0	0	0	0	0	0	0
4:45-5:00p	0	0	0	0	0	0	0	0	0	0	3	0
5:00-5:15p	0	1	0	0	1	0	0	1	0	0	0	0
5:15-5:30p	0	0	0	0	0	0	1	0	0	0	0	0
5:30-5:45p	0	1	0	0	1	0	0	2	0	0	1	0
5:45-6:00p	0	0	0	0	0	0	0	0	0	0	1	0
Peak Hour 4:30p-5:30p	0	1	0	0	1	0	1	1	0	0	3	0

Notes:

Appendix B Synchro Worksheets

Existing Year 2025 AM Peak Hour

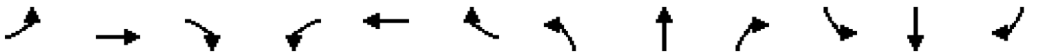

Movement	EBL	EBT	EBR	WBL	WBT	WBR	NBL	NBT	NBR	SBL	SBT	SBR
Lane Configurations												
Traffic Volume (veh/h)	184	326	31	136	238	255	22	375	141	214	284	99
Future Volume (veh/h)	184	326	31	136	238	255	22	375	141	214	284	99
Initial Q (Qb), veh	0	0	0	0	0	0	0	0	0	0	0	0
Lane Width Adj.	1.00	1.00	1.00	1.00	1.00	1.00	1.00	1.00	1.00	1.00	1.00	1.00
Ped-Bike Adj(A_pbT)	1.00		1.00	1.00		1.00	1.00		1.00	1.00		1.00
Parking Bus, Adj	1.00	1.00	1.00	1.00	1.00	1.00	1.00	1.00	1.00	1.00	1.00	1.00
Work Zone On Approach		No			No			No			No	
Adj Sat Flow, veh/h/ln	1870	1870	1870	1870	1870	1870	1870	1870	1870	1870	1870	1870
Adj Flow Rate, veh/h	236	418	0	174	305	0	28	481	0	274	364	0
Peak Hour Factor	0.78	0.78	0.78	0.78	0.78	0.78	0.78	0.78	0.78	0.78	0.78	0.78
Percent Heavy Veh, %	2	2	2	2	2	2	2	2	2	2	2	2
Cap, veh/h	246	576		214	511		53	883		246	1268	
Arrive On Green	0.14	0.16	0.00	0.12	0.14	0.00	0.03	0.25	0.00	0.14	0.36	0.00
Sat Flow, veh/h	1781	3554	1585	1781	3554	1585	1781	3554	1585	1781	3554	1585
Grp Volume(v), veh/h	236	418	0	174	305	0	28	481	0	274	364	0
Grp Sat Flow(s),veh/h/ln	1781	1777	1585	1781	1777	1585	1781	1777	1585	1781	1777	1585
Q Serve(g_s), s	9.5	8.1	0.0	6.9	5.8	0.0	1.1	8.5	0.0	10.0	5.3	0.0
Cycle Q Clear(g_c), s	9.5	8.1	0.0	6.9	5.8	0.0	1.1	8.5	0.0	10.0	5.3	0.0
Prop In Lane	1.00		1.00	1.00		1.00	1.00		1.00	1.00		1.00
Lane Grp Cap(c), veh/h	246	576		214	511		53	883		246	1268	
V/C Ratio(X)	0.96	0.73		0.81	0.60		0.53	0.54		1.11	0.29	
Avail Cap(c_a), veh/h	246	883		246	883		123	883		246	1268	
HCM Platoon Ratio	1.00	1.00	1.00	1.00	1.00	1.00	1.00	1.00	1.00	1.00	1.00	1.00
Upstream Filter(I)	1.00	1.00	0.00	1.00	1.00	0.00	1.00	1.00	0.00	1.00	1.00	0.00
Uniform Delay (d), s/veh	31.0	28.8	0.0	31.1	29.0	0.0	34.6	23.6	0.0	31.2	16.7	0.0
Incr Delay (d2), s/veh	46.0	1.8	0.0	16.7	1.1	0.0	7.9	2.4	0.0	91.4	0.6	0.0
Initial Q Delay(d3), s/veh	0.0	0.0	0.0	0.0	0.0	0.0	0.0	0.0	0.0	0.0	0.0	0.0
%ile BackOfQ(50%),veh/ln	7.1	3.5	0.0	3.8	2.5	0.0	0.6	3.7	0.0	10.4	2.1	0.0
Unsig. Movement Delay, s/veh												
LnGrp Delay(d), s/veh	77.0	30.6	0.0	47.8	30.2	0.0	42.6	26.1	0.0	122.6	17.3	0.0
LnGrp LOS	E	C		D	C		D	C		F	B	
Approach Vol, veh/h		654			479			509			638	
Approach Delay, s/veh		47.3			36.6			27.0			62.5	
Approach LOS		D			D			C			E	

Timer - Assigned Phs	1	2	3	4	5	6	7	8
Phs Duration (G+Y+Rc), s	16.0	24.0	14.7	17.7	8.2	31.8	16.0	16.4
Change Period (Y+Rc), s	6.0	6.0	6.0	6.0	6.0	6.0	6.0	6.0
Max Green Setting (Gmax), s	10.0	18.0	10.0	18.0	5.0	23.0	10.0	18.0
Max Q Clear Time (g_c+I1), s	12.0	10.5	8.9	10.1	3.1	7.3	11.5	7.8
Green Ext Time (p_c), s	0.0	1.9	0.1	1.6	0.0	2.1	0.0	1.3

Intersection Summary	
HCM 7th Control Delay, s/veh	44.8
HCM 7th LOS	D

Notes

Unsignalized Delay for [NBR, EBR, WBR, SBR] is excluded from calculations of the approach delay and intersection delay.

Intersection	
Int Delay, s/veh	0.1

Movement	EBT	EBR	WBL	WBT	NBL	NBR
Lane Configurations						
Traffic Vol, veh/h	677	0	1	544	3	3
Future Vol, veh/h	677	0	1	544	3	3
Conflicting Peds, #/hr	0	0	0	0	0	0
Sign Control	Free	Free	Free	Free	Stop	Stop
RT Channelized	-	None	-	None	-	None
Storage Length	-	-	75	-	0	-
Veh in Median Storage, #	0	-	-	0	0	-
Grade, %	0	-	-	0	0	-
Peak Hour Factor	71	71	71	71	71	71
Heavy Vehicles, %	2	2	2	2	2	2
Mvmt Flow	954	0	1	766	4	4

Major/Minor	Major1		Major2		Minor1	
Conflicting Flow All	0	0	954	0	1339	477
Stage 1	-	-	-	-	954	-
Stage 2	-	-	-	-	386	-
Critical Hdwy	-	-	4.14	-	6.84	6.94
Critical Hdwy Stg 1	-	-	-	-	5.84	-
Critical Hdwy Stg 2	-	-	-	-	5.84	-
Follow-up Hdwy	-	-	2.22	-	3.52	3.32
Pot Cap-1 Maneuver	-	-	716	-	144	535
Stage 1	-	-	-	-	335	-
Stage 2	-	-	-	-	657	-
Platoon blocked, %	-	-		-		
Mov Cap-1 Maneuver	-	-	716	-	144	535
Mov Cap-2 Maneuver	-	-	-	-	144	-
Stage 1	-	-	-	-	335	-
Stage 2	-	-	-	-	655	-

Approach	EB	WB	NB
HCM Ctrl Dly, s/v	0	0.02	21.51
HCM LOS			C

Minor Lane/Major Mvmt	NBLn1	EBT	EBR	WBL	WBT
Capacity (veh/h)	227	-	-	716	-
HCM Lane V/C Ratio	0.037	-	-	0.002	-
HCM Ctrl Dly (s/v)	21.5	-	-	10	-
HCM Lane LOS	C	-	-	B	-
HCM 95th %tile Q(veh)	0.1	-	-	0	-

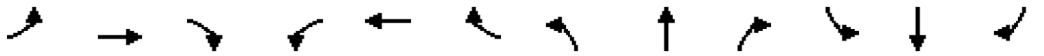

Movement	EBL	EBT	EBR	WBL	WBT	WBR	NBL	NBT	NBR	SBL	SBT	SBR
Lane Configurations												
Traffic Volume (veh/h)	119	441	29	65	334	73	46	40	60	64	14	77
Future Volume (veh/h)	119	441	29	65	334	73	46	40	60	64	14	77
Initial Q (Qb), veh	0	0	0	0	0	0	0	0	0	0	0	0
Lane Width Adj.	1.00	1.00	1.00	1.00	1.00	1.00	1.00	1.00	1.00	1.00	1.00	1.00
Ped-Bike Adj(A_pbT)	1.00		1.00	1.00		1.00	1.00		1.00	1.00		1.00
Parking Bus, Adj	1.00	1.00	1.00	1.00	1.00	1.00	1.00	1.00	1.00	1.00	1.00	1.00
Work Zone On Approach		No			No			No			No	
Adj Sat Flow, veh/h/ln	1870	1870	1870	1870	1870	1870	1870	1870	1870	1870	1870	1870
Adj Flow Rate, veh/h	178	658	43	97	499	109	69	60	90	96	21	115
Peak Hour Factor	0.67	0.67	0.67	0.67	0.67	0.67	0.67	0.67	0.67	0.67	0.67	0.67
Percent Heavy Veh, %	2	2	2	2	2	2	2	2	2	2	2	2
Cap, veh/h	233	985	64	126	670	146	95	56	520	113	14	520
Arrive On Green	0.13	0.29	0.29	0.07	0.23	0.23	0.33	0.33	0.33	0.33	0.33	0.33
Sat Flow, veh/h	1781	3386	221	1781	2903	631	0	171	1585	0	43	1585
Grp Volume(v), veh/h	178	345	356	97	304	304	129	0	90	117	0	115
Grp Sat Flow(s),veh/h/ln	1781	1777	1831	1781	1777	1757	171	0	1585	43	0	1585
Q Serve(g_s), s	5.6	9.9	9.9	3.1	9.2	9.3	0.0	0.0	2.3	0.0	0.0	3.0
Cycle Q Clear(g_c), s	5.6	9.9	9.9	3.1	9.2	9.3	19.0	0.0	2.3	19.0	0.0	3.0
Prop In Lane	1.00		0.12	1.00		0.36	0.53		1.00	0.82		1.00
Lane Grp Cap(c), veh/h	233	517	533	126	410	406	151	0	520	127	0	520
V/C Ratio(X)	0.77	0.67	0.67	0.77	0.74	0.75	0.85	0.00	0.17	0.92	0.00	0.22
Avail Cap(c_a), veh/h	769	1043	1074	277	552	546	151	0	520	127	0	520
HCM Platoon Ratio	1.00	1.00	1.00	1.00	1.00	1.00	1.00	1.00	1.00	1.00	1.00	1.00
Upstream Filter(I)	1.00	1.00	1.00	1.00	1.00	1.00	1.00	0.00	1.00	1.00	0.00	1.00
Uniform Delay (d), s/veh	24.3	18.1	18.1	26.5	20.7	20.7	21.1	0.0	13.9	26.7	0.0	14.1
Incr Delay (d2), s/veh	5.2	1.5	1.5	9.6	3.6	3.9	41.9	0.0	0.7	60.5	0.0	1.0
Initial Q Delay(d3), s/veh	0.0	0.0	0.0	0.0	0.0	0.0	0.0	0.0	0.0	0.0	0.0	0.0
%ile BackOfQ(50%),veh/ln	2.5	3.9	4.0	1.6	3.9	3.9	3.5	0.0	0.9	3.7	0.0	1.1
Unsig. Movement Delay, s/veh												
LnGrp Delay(d), s/veh	29.5	19.6	19.5	36.1	24.3	24.6	63.0	0.0	14.6	87.2	0.0	15.1
LnGrp LOS	C	B	B	D	C	C	E		B	F		B
Approach Vol, veh/h		879			705			219			232	
Approach Delay, s/veh		21.6			26.1			43.1			51.5	
Approach LOS		C			C			D			D	

Timer - Assigned Phs	2	3	4	6	7	8
Phs Duration (G+Y+Rc), s	25.0	10.1	22.9	25.0	13.6	19.4
Change Period (Y+Rc), s	6.0	6.0	6.0	6.0	6.0	6.0
Max Green Setting (Gmax), s	19.0	9.0	34.0	19.0	25.0	18.0
Max Q Clear Time (g_c+I1), s	21.0	5.1	11.9	21.0	7.6	11.3
Green Ext Time (p_c), s	0.0	0.1	4.5	0.0	0.4	2.1

Intersection Summary	
HCM 7th Control Delay, s/veh	28.9
HCM 7th LOS	C

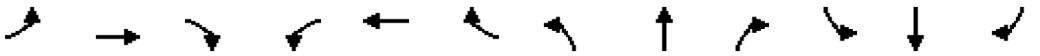

Movement	EBL	EBT	EBR	WBL	WBT	WBR	NBL	NBT	NBR	SBL	SBT	SBR
Lane Configurations												
Traffic Volume (veh/h)	101	360	213	218	509	21	116	36	119	70	31	42
Future Volume (veh/h)	101	360	213	218	509	21	116	36	119	70	31	42
Initial Q (Qb), veh	0	0	0	0	0	0	0	0	0	0	0	0
Lane Width Adj.	1.00	1.00	1.00	1.00	1.00	1.00	1.00	1.00	1.00	1.00	1.00	1.00
Ped-Bike Adj(A_pbT)	1.00		1.00	1.00		1.00	1.00		1.00	1.00		1.00
Parking Bus, Adj	1.00	1.00	1.00	1.00	1.00	1.00	1.00	1.00	1.00	1.00	1.00	1.00
Work Zone On Approach		No			No			No			No	
Adj Sat Flow, veh/h/ln	1870	1870	1870	1870	1870	1870	1870	1870	1870	1870	1870	1870
Adj Flow Rate, veh/h	131	468	277	283	661	27	151	47	155	91	40	55
Peak Hour Factor	0.77	0.77	0.77	0.77	0.77	0.77	0.77	0.77	0.77	0.77	0.77	0.77
Percent Heavy Veh, %	2	2	2	2	2	2	2	2	2	2	2	2
Cap, veh/h	167	558	329	309	1179	48	251	78	194	248	113	116
Arrive On Green	0.09	0.26	0.26	0.17	0.34	0.34	0.28	0.28	0.28	0.28	0.28	0.28
Sat Flow, veh/h	1781	2152	1267	1781	3480	142	599	276	685	575	397	408
Grp Volume(v), veh/h	131	386	359	283	337	351	353	0	0	186	0	0
Grp Sat Flow(s),veh/h/ln	1781	1777	1642	1781	1777	1845	1561	0	0	1381	0	0
Q Serve(g_s), s	4.6	13.0	13.2	9.9	9.8	9.8	6.2	0.0	0.0	0.0	0.0	0.0
Cycle Q Clear(g_c), s	4.6	13.0	13.2	9.9	9.8	9.8	12.9	0.0	0.0	6.7	0.0	0.0
Prop In Lane	1.00		0.77	1.00		0.08	0.43		0.44	0.49		0.30
Lane Grp Cap(c), veh/h	167	461	426	309	602	625	524	0	0	476	0	0
V/C Ratio(X)	0.78	0.84	0.84	0.92	0.56	0.56	0.67	0.00	0.00	0.39	0.00	0.00
Avail Cap(c_a), veh/h	225	504	466	309	602	625	524	0	0	476	0	0
HCM Platoon Ratio	1.00	1.00	1.00	1.00	1.00	1.00	1.00	1.00	1.00	1.00	1.00	1.00
Upstream Filter(I)	1.00	1.00	1.00	1.00	1.00	1.00	1.00	0.00	0.00	1.00	0.00	0.00
Uniform Delay (d), s/veh	28.1	22.2	22.3	25.8	17.1	17.1	20.7	0.0	0.0	18.5	0.0	0.0
Incr Delay (d2), s/veh	12.1	11.1	12.4	30.6	1.2	1.1	6.8	0.0	0.0	2.4	0.0	0.0
Initial Q Delay(d3), s/veh	0.0	0.0	0.0	0.0	0.0	0.0	0.0	0.0	0.0	0.0	0.0	0.0
%ile BackOfQ(50%),veh/ln	2.4	6.4	6.1	6.6	3.9	4.0	5.4	0.0	0.0	2.4	0.0	0.0
Unsig. Movement Delay, s/veh												
LnGrp Delay(d), s/veh	40.2	33.3	34.6	56.4	18.3	18.3	27.5	0.0	0.0	20.9	0.0	0.0
LnGrp LOS	D	C	C	E	B	B	C			C		
Approach Vol, veh/h		876			971			353			186	
Approach Delay, s/veh		34.9			29.4			27.5			20.9	
Approach LOS		C			C			C			C	

Timer - Assigned Phs		2	3	4		6	7	8				
Phs Duration (G+Y+Rc), s		24.0	17.0	22.5		24.0	12.0	27.5				
Change Period (Y+Rc), s		6.0	6.0	6.0		6.0	6.0	6.0				
Max Green Setting (Gmax), s		18.0	11.0	18.0		18.0	8.0	21.0				
Max Q Clear Time (g_c+I1), s		14.9	11.9	15.2		8.7	6.6	11.8				
Green Ext Time (p_c), s		0.6	0.0	1.3		0.7	0.0	2.9				

Intersection Summary	
HCM 7th Control Delay, s/veh	30.5
HCM 7th LOS	C

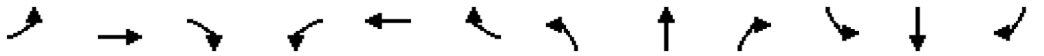

Movement	EBL	EBT	EBR	WBL	WBT	WBR	NBL	NBT	NBR	SBL	SBT	SBR
Lane Configurations												
Traffic Volume (veh/h)	64	595	36	490	743	24	37	107	493	122	124	76
Future Volume (veh/h)	64	595	36	490	743	24	37	107	493	122	124	76
Initial Q (Qb), veh	0	0	0	0	0	0	0	0	0	0	0	0
Lane Width Adj.	1.00	1.00	1.00	1.00	1.00	1.00	1.00	1.00	1.00	1.00	1.00	1.00
Ped-Bike Adj(A_pbT)	1.00		1.00	1.00		1.00	1.00		1.00	1.00		1.00
Parking Bus, Adj	1.00	1.00	1.00	1.00	1.00	1.00	1.00	1.00	1.00	1.00	1.00	1.00
Work Zone On Approach		No			No			No			No	
Adj Sat Flow, veh/h/ln	1870	1870	1870	1870	1870	1870	1870	1870	1870	1870	1870	1870
Adj Flow Rate, veh/h	81	753	46	620	941	30	47	135	624	154	157	96
Peak Hour Factor	0.79	0.79	0.79	0.79	0.79	0.79	0.79	0.79	0.79	0.79	0.79	0.79
Percent Heavy Veh, %	2	2	2	2	2	2	2	2	2	2	2	2
Cap, veh/h	104	988	60	714	1227	39	366	665	564	300	361	226
Arrive On Green	0.06	0.20	0.20	0.21	0.35	0.35	0.36	0.36	0.36	0.36	0.36	0.36
Sat Flow, veh/h	1781	4921	299	3456	3515	112	1127	1870	1585	588	1014	636
Grp Volume(v), veh/h	81	520	279	620	476	495	47	135	624	167	0	240
Grp Sat Flow(s),veh/h/ln	1781	1702	1816	1728	1777	1850	1127	1870	1585	650	0	1588
Q Serve(g_s), s	3.4	10.9	11.0	13.2	18.1	18.1	2.5	3.8	27.0	14.8	0.0	8.7
Cycle Q Clear(g_c), s	3.4	10.9	11.0	13.2	18.1	18.1	11.2	3.8	27.0	18.6	0.0	8.7
Prop In Lane	1.00		0.16	1.00		0.06	1.00		1.00	0.92		0.40
Lane Grp Cap(c), veh/h	104	684	365	714	620	646	366	665	564	322	0	564
V/C Ratio(X)	0.78	0.76	0.76	0.87	0.77	0.77	0.13	0.20	1.11	0.52	0.00	0.42
Avail Cap(c_a), veh/h	141	807	431	774	679	707	366	665	564	322	0	564
HCM Platoon Ratio	1.00	1.00	1.00	1.00	1.00	1.00	1.00	1.00	1.00	1.00	1.00	1.00
Upstream Filter(I)	1.00	1.00	1.00	1.00	1.00	1.00	1.00	1.00	1.00	1.00	0.00	1.00
Uniform Delay (d), s/veh	35.3	28.6	28.7	29.1	22.0	22.0	22.8	17.0	24.5	23.2	0.0	18.6
Incr Delay (d2), s/veh	17.4	3.6	6.8	9.8	4.8	4.7	0.7	0.7	70.8	5.9	0.0	2.3
Initial Q Delay(d3), s/veh	0.0	0.0	0.0	0.0	0.0	0.0	0.0	0.0	0.0	0.0	0.0	0.0
%ile BackOfQ(50%),veh/ln	1.9	4.6	5.3	6.2	7.9	8.2	0.7	1.7	20.4	3.0	0.0	3.4
Unsig. Movement Delay, s/veh												
LnGrp Delay(d), s/veh	52.6	32.2	35.4	39.0	26.8	26.6	23.6	17.7	95.3	29.0	0.0	20.9
LnGrp LOS	D	C	D	D	C	C	C	B	F	C		C
Approach Vol, veh/h		880			1591			806			407	
Approach Delay, s/veh		35.1			31.5			78.1			24.3	
Approach LOS		D			C			E			C	

Timer - Assigned Phs		2	3	4		6	7	8				
Phs Duration (G+Y+Rc), s		33.0	21.7	21.3		33.0	10.4	32.5				
Change Period (Y+Rc), s		6.0	6.0	6.0		6.0	6.0	6.0				
Max Green Setting (Gmax), s		27.0	17.0	18.0		27.0	6.0	29.0				
Max Q Clear Time (g_c+I1), s		29.0	15.2	13.0		20.6	5.4	20.1				
Green Ext Time (p_c), s		0.0	0.5	2.2		1.6	0.0	4.1				

Intersection Summary	
HCM 7th Control Delay, s/veh	41.7
HCM 7th LOS	D

Existing Year 2025 PM Peak Hour

HCM 7th Signalized Intersection Summary
1: Kamehameha Hwy & Meheula Pkwy 11/05/2025

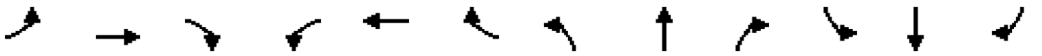

Movement	EBL	EBT	EBR	WBL	WBT	WBR	NBL	NBT	NBR	SBL	SBT	SBR
Lane Configurations												
Traffic Volume (veh/h)	125	245	22	156	318	250	77	359	110	220	287	177
Future Volume (veh/h)	125	245	22	156	318	250	77	359	110	220	287	177
Initial Q (Qb), veh	0	0	0	0	0	0	0	0	0	0	0	0
Lane Width Adj.	1.00	1.00	1.00	1.00	1.00	1.00	1.00	1.00	1.00	1.00	1.00	1.00
Ped-Bike Adj(A_pbT)	1.00		1.00	1.00		1.00	1.00		1.00	1.00		1.00
Parking Bus, Adj	1.00	1.00	1.00	1.00	1.00	1.00	1.00	1.00	1.00	1.00	1.00	1.00
Work Zone On Approach		No			No			No			No	
Adj Sat Flow, veh/h/ln	1870	1870	1870	1870	1870	1870	1870	1870	1870	1870	1870	1870
Adj Flow Rate, veh/h	134	263	0	168	342	0	83	386	0	237	309	0
Peak Hour Factor	0.93	0.93	0.93	0.93	0.93	0.93	0.93	0.93	0.93	0.93	0.93	0.93
Percent Heavy Veh, %	2	2	2	2	2	2	2	2	2	2	2	2
Cap, veh/h	169	431		206	503		107	923		281	1269	
Arrive On Green	0.10	0.12	0.00	0.12	0.14	0.00	0.06	0.26	0.00	0.16	0.36	0.00
Sat Flow, veh/h	1781	3554	1585	1781	3554	1585	1781	3554	1585	1781	3554	1585
Grp Volume(v), veh/h	134	263	0	168	342	0	83	386	0	237	309	0
Grp Sat Flow(s),veh/h/ln	1781	1777	1585	1781	1777	1585	1781	1777	1585	1781	1777	1585
Q Serve(g_s), s	5.1	4.9	0.0	6.4	6.3	0.0	3.2	6.3	0.0	9.0	4.2	0.0
Cycle Q Clear(g_c), s	5.1	4.9	0.0	6.4	6.3	0.0	3.2	6.3	0.0	9.0	4.2	0.0
Prop In Lane	1.00		1.00	1.00		1.00	1.00		1.00	1.00		1.00
Lane Grp Cap(c), veh/h	169	431		206	503		107	923		281	1269	
V/C Ratio(X)	0.79	0.61		0.82	0.68		0.77	0.42		0.84	0.24	
Avail Cap(c_a), veh/h	206	923		206	923		231	923		308	1269	
HCM Platoon Ratio	1.00	1.00	1.00	1.00	1.00	1.00	1.00	1.00	1.00	1.00	1.00	1.00
Upstream Filter(I)	1.00	1.00	0.00	1.00	1.00	0.00	1.00	1.00	0.00	1.00	1.00	0.00
Uniform Delay (d), s/veh	30.7	28.9	0.0	30.0	28.3	0.0	32.1	21.3	0.0	28.4	15.7	0.0
Incr Delay (d2), s/veh	15.7	1.4	0.0	22.1	1.6	0.0	11.2	1.4	0.0	17.7	0.5	0.0
Initial Q Delay(d3), s/veh	0.0	0.0	0.0	0.0	0.0	0.0	0.0	0.0	0.0	0.0	0.0	0.0
%ile BackOfQ(50%),veh/ln	2.8	2.1	0.0	3.9	2.7	0.0	1.7	2.6	0.0	5.0	1.7	0.0
Unsig. Movement Delay, s/veh												
LnGrp Delay(d), s/veh	46.4	30.3	0.0	52.0	29.9	0.0	43.3	22.7	0.0	46.1	16.2	0.0
LnGrp LOS	D	C		D	C		D	C		D	B	
Approach Vol, veh/h		397			510			469			546	
Approach Delay, s/veh		35.7			37.2			26.4			29.1	
Approach LOS		D			D			C			C	

Timer - Assigned Phs	1	2	3	4	5	6	7	8
Phs Duration (G+Y+Rc), s	16.9	24.0	14.0	14.4	10.2	30.7	12.6	15.8
Change Period (Y+Rc), s	6.0	6.0	6.0	6.0	6.0	6.0	6.0	6.0
Max Green Setting (Gmax), s	12.0	18.0	8.0	18.0	9.0	21.0	8.0	18.0
Max Q Clear Time (g_c+I1), s	11.0	8.3	8.4	6.9	5.2	6.2	7.1	8.3
Green Ext Time (p_c), s	0.1	1.7	0.0	1.2	0.1	1.7	0.0	1.5

Intersection Summary	
HCM 7th Control Delay, s/veh	32.0
HCM 7th LOS	C

Notes

Unsignalized Delay for [NBR, EBR, WBR, SBR] is excluded from calculations of the approach delay and intersection delay.

Intersection	
Int Delay, s/veh	0.1

Movement	EBT	EBR	WBL	WBT	NBL	NBR
Lane Configurations						
Traffic Vol, veh/h	534	1	0	567	3	0
Future Vol, veh/h	534	1	0	567	3	0
Conflicting Peds, #/hr	0	0	0	0	0	0
Sign Control	Free	Free	Free	Free	Stop	Stop
RT Channelized	-	None	-	None	-	None
Storage Length	-	-	75	-	0	-
Veh in Median Storage, #	0	-	-	0	0	-
Grade, %	0	-	-	0	0	-
Peak Hour Factor	87	87	87	87	87	87
Heavy Vehicles, %	2	2	2	2	2	2
Mvmt Flow	614	1	0	652	3	0

Major/Minor	Major1		Major2		Minor1	
Conflicting Flow All	0	0	615	0	940	307
Stage 1	-	-	-	-	614	-
Stage 2	-	-	-	-	326	-
Critical Hdwy	-	-	4.14	-	6.84	6.94
Critical Hdwy Stg 1	-	-	-	-	5.84	-
Critical Hdwy Stg 2	-	-	-	-	5.84	-
Follow-up Hdwy	-	-	2.22	-	3.52	3.32
Pot Cap-1 Maneuver	-	-	961	-	262	688
Stage 1	-	-	-	-	502	-
Stage 2	-	-	-	-	704	-
Platoon blocked, %	-	-		-		
Mov Cap-1 Maneuver	-	-	961	-	262	688
Mov Cap-2 Maneuver	-	-	-	-	262	-
Stage 1	-	-	-	-	502	-
Stage 2	-	-	-	-	704	-

Approach	EB	WB	NB
HCM Ctrl Dly, s/v	0	0	18.92
HCM LOS			C

Minor Lane/Major Mvmt	NBLn1	EBT	EBR	WBL	WBT
Capacity (veh/h)	262	-	-	961	-
HCM Lane V/C Ratio	0.013	-	-	-	-
HCM Ctrl Dly (s/v)	18.9	-	-	0	-
HCM Lane LOS	C	-	-	A	-
HCM 95th %tile Q(veh)	0	-	-	0	-

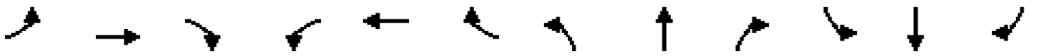

Movement	EBL	EBT	EBR	WBL	WBT	WBR	NBL	NBT	NBR	SBL	SBT	SBR
Lane Configurations												
Traffic Volume (veh/h)	17	457	55	72	516	19	43	4	51	21	4	16
Future Volume (veh/h)	17	457	55	72	516	19	43	4	51	21	4	16
Initial Q (Qb), veh	0	0	0	0	0	0	0	0	0	0	0	0
Lane Width Adj.	1.00	1.00	1.00	1.00	1.00	1.00	1.00	1.00	1.00	1.00	1.00	1.00
Ped-Bike Adj(A_pbT)	1.00		1.00	1.00		1.00	1.00		1.00	1.00		1.00
Parking Bus, Adj	1.00	1.00	1.00	1.00	1.00	1.00	1.00	1.00	1.00	1.00	1.00	1.00
Work Zone On Approach		No			No			No			No	
Adj Sat Flow, veh/h/ln	1870	1870	1870	1870	1870	1870	1870	1870	1870	1870	1870	1870
Adj Flow Rate, veh/h	20	525	63	83	593	22	49	5	59	24	5	18
Peak Hour Factor	0.87	0.87	0.87	0.87	0.87	0.87	0.87	0.87	0.87	0.87	0.87	0.87
Percent Heavy Veh, %	2	2	2	2	2	2	2	2	2	2	2	2
Cap, veh/h	43	748	89	120	969	36	169	11	554	147	19	554
Arrive On Green	0.02	0.23	0.23	0.07	0.28	0.28	0.35	0.35	0.35	0.35	0.35	0.35
Sat Flow, veh/h	1781	3196	382	1781	3494	130	104	32	1585	55	55	1585
Grp Volume(v), veh/h	20	291	297	83	301	314	54	0	59	29	0	18
Grp Sat Flow(s),veh/h/ln	1781	1777	1802	1781	1777	1847	135	0	1585	110	0	1585
Q Serve(g_s), s	0.6	7.7	7.8	2.3	7.6	7.6	1.4	0.0	1.3	0.5	0.0	0.4
Cycle Q Clear(g_c), s	0.6	7.7	7.8	2.3	7.6	7.6	18.0	0.0	1.3	17.7	0.0	0.4
Prop In Lane	1.00		0.21	1.00		0.07	0.91		1.00	0.83		1.00
Lane Grp Cap(c), veh/h	43	416	422	120	493	512	180	0	554	166	0	554
V/C Ratio(X)	0.46	0.70	0.70	0.69	0.61	0.61	0.30	0.00	0.11	0.17	0.00	0.03
Avail Cap(c_a), veh/h	173	621	629	207	655	681	180	0	554	166	0	554
HCM Platoon Ratio	1.00	1.00	1.00	1.00	1.00	1.00	1.00	1.00	1.00	1.00	1.00	1.00
Upstream Filter(I)	1.00	1.00	1.00	1.00	1.00	1.00	1.00	0.00	1.00	1.00	0.00	1.00
Uniform Delay (d), s/veh	24.8	18.1	18.1	23.5	16.2	16.2	22.8	0.0	11.3	16.2	0.0	11.0
Incr Delay (d2), s/veh	7.6	2.1	2.2	6.9	1.2	1.2	4.2	0.0	0.4	2.3	0.0	0.1
Initial Q Delay(d3), s/veh	0.0	0.0	0.0	0.0	0.0	0.0	0.0	0.0	0.0	0.0	0.0	0.0
%ile BackOfQ(50%),veh/ln	0.3	3.1	3.1	1.1	2.9	3.0	0.8	0.0	0.5	0.3	0.0	0.1
Unsig. Movement Delay, s/veh												
LnGrp Delay(d), s/veh	32.4	20.2	20.3	30.4	17.4	17.4	27.0	0.0	11.7	18.5	0.0	11.1
LnGrp LOS	C	C	C	C	B	B	C		B	B		B
Approach Vol, veh/h		608			698			113			47	
Approach Delay, s/veh		20.6			19.0			19.0			15.7	
Approach LOS		C			B			B			B	

Timer - Assigned Phs		2	3	4		6	7	8				
Phs Duration (G+Y+Rc), s		24.0	9.5	18.1		24.0	7.2	20.3				
Change Period (Y+Rc), s		6.0	6.0	6.0		6.0	6.0	6.0				
Max Green Setting (Gmax), s		18.0	6.0	18.0		18.0	5.0	19.0				
Max Q Clear Time (g_c+I1), s		20.0	4.3	9.8		19.7	2.6	9.6				
Green Ext Time (p_c), s		0.0	0.0	2.3		0.0	0.0	2.6				

Intersection Summary	
HCM 7th Control Delay, s/veh	19.6
HCM 7th LOS	B

HCM 7th Signalized Intersection Summary
14: Makaimoimo St/High School Dwy & Meheula Pkwy 11/06/2025

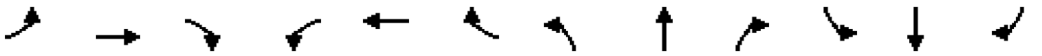

Movement	EBL	EBT	EBR	WBL	WBT	WBR	NBL	NBT	NBR	SBL	SBT	SBR
Lane Configurations												
Traffic Volume (veh/h)	83	241	251	239	425	19	265	40	210	52	28	47
Future Volume (veh/h)	83	241	251	239	425	19	265	40	210	52	28	47
Initial Q (Qb), veh	0	0	0	0	0	0	0	0	0	0	0	0
Lane Width Adj.	1.00	1.00	1.00	1.00	1.00	1.00	1.00	1.00	1.00	1.00	1.00	1.00
Ped-Bike Adj(A_pbT)	1.00		1.00	1.00		1.00	1.00		1.00	1.00		1.00
Parking Bus, Adj	1.00	1.00	1.00	1.00	1.00	1.00	1.00	1.00	1.00	1.00	1.00	1.00
Work Zone On Approach		No			No			No			No	
Adj Sat Flow, veh/h/ln	1870	1870	1870	1870	1870	1870	1870	1870	1870	1870	1870	1870
Adj Flow Rate, veh/h	90	262	273	260	462	21	288	43	228	57	30	51
Peak Hour Factor	0.92	0.92	0.92	0.92	0.92	0.92	0.92	0.92	0.92	0.92	0.92	0.92
Percent Heavy Veh, %	2	2	2	2	2	2	2	2	2	2	2	2
Cap, veh/h	115	345	308	294	1020	46	395	50	264	285	155	225
Arrive On Green	0.06	0.19	0.19	0.17	0.29	0.29	0.44	0.44	0.44	0.44	0.44	0.44
Sat Flow, veh/h	1781	1777	1585	1781	3462	157	761	114	603	520	354	513
Grp Volume(v), veh/h	90	262	273	260	237	246	559	0	0	138	0	0
Grp Sat Flow(s),veh/h/ln	1781	1777	1585	1781	1777	1842	1479	0	0	1387	0	0
Q Serve(g_s), s	4.4	12.4	14.9	12.7	9.6	9.7	25.4	0.0	0.0	0.0	0.0	0.0
Cycle Q Clear(g_c), s	4.4	12.4	14.9	12.7	9.6	9.7	30.1	0.0	0.0	4.7	0.0	0.0
Prop In Lane	1.00		1.00	1.00		0.09	0.52		0.41	0.41		0.37
Lane Grp Cap(c), veh/h	115	345	308	294	524	543	709	0	0	665	0	0
V/C Ratio(X)	0.78	0.76	0.89	0.88	0.45	0.45	0.79	0.00	0.00	0.21	0.00	0.00
Avail Cap(c_a), veh/h	180	359	321	300	524	543	709	0	0	665	0	0
HCM Platoon Ratio	1.00	1.00	1.00	1.00	1.00	1.00	1.00	1.00	1.00	1.00	1.00	1.00
Upstream Filter(I)	1.00	1.00	1.00	1.00	1.00	1.00	1.00	0.00	0.00	1.00	0.00	0.00
Uniform Delay (d), s/veh	41.0	33.9	34.9	36.3	25.5	25.6	22.2	0.0	0.0	15.3	0.0	0.0
Incr Delay (d2), s/veh	10.7	8.7	23.8	24.9	0.6	0.6	8.7	0.0	0.0	0.7	0.0	0.0
Initial Q Delay(d3), s/veh	0.0	0.0	0.0	0.0	0.0	0.0	0.0	0.0	0.0	0.0	0.0	0.0
%ile BackOfQ(50%),veh/ln	2.3	6.1	7.7	7.4	4.1	4.2	11.5	0.0	0.0	1.8	0.0	0.0
Unsig. Movement Delay, s/veh												
LnGrp Delay(d), s/veh	51.7	42.6	58.7	61.2	26.1	26.1	30.9	0.0	0.0	16.0	0.0	0.0
LnGrp LOS	D	D	E	E	C	C	C			B		
Approach Vol, veh/h		625			743			559			138	
Approach Delay, s/veh		50.9			38.4			30.9			16.0	
Approach LOS		D			D			C			B	

Timer - Assigned Phs		2	3	4		6	7	8				
Phs Duration (G+Y+Rc), s		45.0	20.7	23.3		45.0	11.8	32.2				
Change Period (Y+Rc), s		6.0	6.0	6.0		6.0	6.0	6.0				
Max Green Setting (Gmax), s		39.0	15.0	18.0		39.0	9.0	24.0				
Max Q Clear Time (g_c+I1), s		32.1	14.7	16.9		6.7	6.4	11.7				
Green Ext Time (p_c), s		2.2	0.0	0.4		0.9	0.0	2.3				

Intersection Summary	
HCM 7th Control Delay, s/veh	38.7
HCM 7th LOS	D

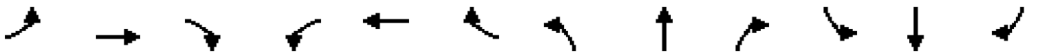

Movement	EBL	EBT	EBR	WBL	WBT	WBR	NBL	NBT	NBR	SBL	SBT	SBR
Lane Configurations												
Traffic Volume (veh/h)	61	447	30	703	727	53	20	123	620	26	144	84
Future Volume (veh/h)	61	447	30	703	727	53	20	123	620	26	144	84
Initial Q (Qb), veh	0	0	0	0	0	0	0	0	0	0	0	0
Lane Width Adj.	1.00	1.00	1.00	1.00	1.00	1.00	1.00	1.00	1.00	1.00	1.00	1.00
Ped-Bike Adj(A_pbT)	1.00		1.00	1.00		1.00	1.00		1.00	1.00		1.00
Parking Bus, Adj	1.00	1.00	1.00	1.00	1.00	1.00	1.00	1.00	1.00	1.00	1.00	1.00
Work Zone On Approach		No			No			No			No	
Adj Sat Flow, veh/h/ln	1870	1870	1870	1870	1870	1870	1870	1870	1870	1870	1870	1870
Adj Flow Rate, veh/h	64	471	32	740	765	56	21	129	653	27	152	88
Peak Hour Factor	0.95	0.95	0.95	0.95	0.95	0.95	0.95	0.95	0.95	0.95	0.95	0.95
Percent Heavy Veh, %	2	2	2	2	2	2	2	2	2	2	2	2
Cap, veh/h	83	629	42	857	1109	81	524	843	714	145	787	460
Arrive On Green	0.05	0.13	0.13	0.25	0.33	0.33	0.45	0.45	0.45	0.45	0.45	0.45
Sat Flow, veh/h	1781	4886	329	3456	3357	246	1140	1870	1585	230	1746	1021
Grp Volume(v), veh/h	64	327	176	740	405	416	21	129	653	136	0	131
Grp Sat Flow(s),veh/h/ln	1781	1702	1811	1728	1777	1826	1140	1870	1585	1478	0	1518
Q Serve(g_s), s	3.7	9.6	9.8	21.4	20.6	20.6	1.2	4.2	40.2	0.0	0.0	5.4
Cycle Q Clear(g_c), s	3.7	9.6	9.8	21.4	20.6	20.6	6.6	4.2	40.2	4.5	0.0	5.4
Prop In Lane	1.00		0.18	1.00		0.13	1.00		1.00	0.20		0.67
Lane Grp Cap(c), veh/h	83	438	233	857	587	603	524	843	714	707	0	684
V/C Ratio(X)	0.77	0.75	0.76	0.86	0.69	0.69	0.04	0.15	0.91	0.19	0.00	0.19
Avail Cap(c_a), veh/h	171	587	313	1226	767	788	524	843	714	707	0	684
HCM Platoon Ratio	1.00	1.00	1.00	1.00	1.00	1.00	1.00	1.00	1.00	1.00	1.00	1.00
Upstream Filter(I)	1.00	1.00	1.00	1.00	1.00	1.00	1.00	1.00	1.00	1.00	0.00	1.00
Uniform Delay (d), s/veh	49.2	43.8	43.9	37.5	30.3	30.3	19.2	16.9	26.8	17.0	0.0	17.2
Incr Delay (d2), s/veh	14.1	3.5	7.1	4.7	1.7	1.7	0.1	0.4	18.3	0.6	0.0	0.6
Initial Q Delay(d3), s/veh	0.0	0.0	0.0	0.0	0.0	0.0	0.0	0.0	0.0	0.0	0.0	0.0
%ile BackOfQ(50%),veh/ln	2.0	4.3	4.8	9.5	8.9	9.2	0.3	1.9	18.1	2.0	0.0	2.0
Unsig. Movement Delay, s/veh												
LnGrp Delay(d), s/veh	63.3	47.3	50.9	42.2	32.0	32.0	19.4	17.3	45.0	17.6	0.0	17.9
LnGrp LOS	E	D	D	D	C	C	B	B	D	B		B
Approach Vol, veh/h		567			1561			803			267	
Approach Delay, s/veh		50.3			36.8			39.9			17.7	
Approach LOS		D			D			D			B	

Timer - Assigned Phs		2	3	4		6	7	8				
Phs Duration (G+Y+Rc), s		53.0	31.9	19.4		53.0	10.8	40.5				
Change Period (Y+Rc), s		6.0	6.0	6.0		6.0	6.0	6.0				
Max Green Setting (Gmax), s		47.0	37.0	18.0		47.0	10.0	45.0				
Max Q Clear Time (g_c+I1), s		42.2	23.4	11.8		7.4	5.7	22.6				
Green Ext Time (p_c), s		1.7	2.5	1.6		1.9	0.0	5.5				

Intersection Summary	
HCM 7th Control Delay, s/veh	38.4
HCM 7th LOS	D

Future Year 2030 AM Peak Hour No Build

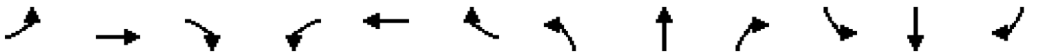

Movement	EBL	EBT	EBR	WBL	WBT	WBR	NBL	NBT	NBR	SBL	SBT	SBR
Lane Configurations												
Traffic Volume (veh/h)	190	340	35	140	245	265	30	365	130	215	275	115
Future Volume (veh/h)	190	340	35	140	245	265	30	365	130	215	275	115
Initial Q (Qb), veh	0	0	0	0	0	0	0	0	0	0	0	0
Lane Width Adj.	1.00	1.00	1.00	1.00	1.00	1.00	1.00	1.00	1.00	1.00	1.00	1.00
Ped-Bike Adj(A_pbT)	1.00		1.00	1.00		1.00	1.00		1.00	1.00		1.00
Parking Bus, Adj	1.00	1.00	1.00	1.00	1.00	1.00	1.00	1.00	1.00	1.00	1.00	1.00
Work Zone On Approach		No			No			No			No	
Adj Sat Flow, veh/h/ln	1870	1870	1870	1870	1870	1870	1870	1870	1870	1870	1870	1870
Adj Flow Rate, veh/h	244	436	0	179	314	0	38	468	0	276	353	0
Peak Hour Factor	0.78	0.78	0.78	0.78	0.78	0.78	0.78	0.78	0.78	0.78	0.78	0.78
Percent Heavy Veh, %	2	2	2	2	2	2	2	2	2	2	2	2
Cap, veh/h	243	592		218	542		66	874		243	1230	
Arrive On Green	0.14	0.17	0.00	0.12	0.15	0.00	0.04	0.25	0.00	0.14	0.35	0.00
Sat Flow, veh/h	1781	3554	1585	1781	3554	1585	1781	3554	1585	1781	3554	1585
Grp Volume(v), veh/h	244	436	0	179	314	0	38	468	0	276	353	0
Grp Sat Flow(s),veh/h/ln	1781	1777	1585	1781	1777	1585	1781	1777	1585	1781	1777	1585
Q Serve(g_s), s	10.0	8.5	0.0	7.2	6.0	0.0	1.5	8.4	0.0	10.0	5.3	0.0
Cycle Q Clear(g_c), s	10.0	8.5	0.0	7.2	6.0	0.0	1.5	8.4	0.0	10.0	5.3	0.0
Prop In Lane	1.00		1.00	1.00		1.00	1.00		1.00	1.00		1.00
Lane Grp Cap(c), veh/h	243	592		218	542		66	874		243	1230	
V/C Ratio(X)	1.00	0.74		0.82	0.58		0.58	0.54		1.13	0.29	
Avail Cap(c_a), veh/h	243	874		243	874		122	874		243	1230	
HCM Platoon Ratio	1.00	1.00	1.00	1.00	1.00	1.00	1.00	1.00	1.00	1.00	1.00	1.00
Upstream Filter(I)	1.00	1.00	0.00	1.00	1.00	0.00	1.00	1.00	0.00	1.00	1.00	0.00
Uniform Delay (d), s/veh	31.6	29.0	0.0	31.3	28.8	0.0	34.7	23.9	0.0	31.6	17.4	0.0
Incr Delay (d2), s/veh	58.2	1.8	0.0	17.9	1.0	0.0	7.9	2.3	0.0	98.4	0.6	0.0
Initial Q Delay(d3), s/veh	0.0	0.0	0.0	0.0	0.0	0.0	0.0	0.0	0.0	0.0	0.0	0.0
%ile BackOfQ(50%),veh/ln	8.1	3.6	0.0	4.1	2.5	0.0	0.8	3.6	0.0	10.8	2.1	0.0
Unsig. Movement Delay, s/veh												
LnGrp Delay(d), s/veh	89.8	30.8	0.0	49.2	29.8	0.0	42.6	26.3	0.0	130.0	18.0	0.0
LnGrp LOS	F	C		D	C		D	C		F	B	
Approach Vol, veh/h		680			493			506			629	
Approach Delay, s/veh		51.9			36.9			27.5			67.1	
Approach LOS		D			D			C			E	

Timer - Assigned Phs	1	2	3	4	5	6	7	8
Phs Duration (G+Y+Rc), s	16.0	24.0	15.0	18.2	8.7	31.3	16.0	17.2
Change Period (Y+Rc), s	6.0	6.0	6.0	6.0	6.0	6.0	6.0	6.0
Max Green Setting (Gmax), s	10.0	18.0	10.0	18.0	5.0	23.0	10.0	18.0
Max Q Clear Time (g_c+I1), s	12.0	10.4	9.2	10.5	3.5	7.3	12.0	8.0
Green Ext Time (p_c), s	0.0	1.8	0.0	1.7	0.0	2.0	0.0	1.4

Intersection Summary	
HCM 7th Control Delay, s/veh	47.5
HCM 7th LOS	D

Notes

Unsignalized Delay for [NBR, EBR, WBR, SBR] is excluded from calculations of the approach delay and intersection delay.

Intersection	
Int Delay, s/veh	0.2

Movement	EBT	EBR	WBL	WBT	NBL	NBR
Lane Configurations						
Traffic Vol, veh/h	700	0	5	565	5	5
Future Vol, veh/h	700	0	5	565	5	5
Conflicting Peds, #/hr	0	0	0	0	0	0
Sign Control	Free	Free	Free	Free	Stop	Stop
RT Channelized	-	None	-	None	-	None
Storage Length	-	-	75	-	0	-
Veh in Median Storage, #	0	-	-	0	0	-
Grade, %	0	-	-	0	0	-
Peak Hour Factor	71	71	71	71	71	71
Heavy Vehicles, %	2	2	2	2	2	2
Mvmt Flow	986	0	7	796	7	7

Major/Minor	Major1		Major2		Minor1	
Conflicting Flow All	0	0	986	0	1398	493
Stage 1	-	-	-	-	986	-
Stage 2	-	-	-	-	412	-
Critical Hdwy	-	-	4.14	-	6.84	6.94
Critical Hdwy Stg 1	-	-	-	-	5.84	-
Critical Hdwy Stg 2	-	-	-	-	5.84	-
Follow-up Hdwy	-	-	2.22	-	3.52	3.32
Pot Cap-1 Maneuver	-	-	696	-	132	522
Stage 1	-	-	-	-	322	-
Stage 2	-	-	-	-	637	-
Platoon blocked, %	-	-		-		
Mov Cap-1 Maneuver	-	-	696	-	130	522
Mov Cap-2 Maneuver	-	-	-	-	130	-
Stage 1	-	-	-	-	322	-
Stage 2	-	-	-	-	630	-

Approach	EB	WB	NB
HCM Ctrl Dly, s/v	0	0.09	23.5
HCM LOS			C

Minor Lane/Major Mvmt	NBLn1	EBT	EBR	WBL	WBT
Capacity (veh/h)	209	-	-	696	-
HCM Lane V/C Ratio	0.067	-	-	0.01	-
HCM Ctrl Dly (s/v)	23.5	-	-	10.2	-
HCM Lane LOS	C	-	-	B	-
HCM 95th %tile Q(veh)	0.2	-	-	0	-

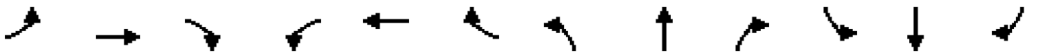

Movement	EBL	EBT	EBR	WBL	WBT	WBR	NBL	NBT	NBR	SBL	SBT	SBR
Lane Configurations												
Traffic Volume (veh/h)	120	455	30	70	345	75	50	40	65	65	15	80
Future Volume (veh/h)	120	455	30	70	345	75	50	40	65	65	15	80
Initial Q (Qb), veh	0	0	0	0	0	0	0	0	0	0	0	0
Lane Width Adj.	1.00	1.00	1.00	1.00	1.00	1.00	1.00	1.00	1.00	1.00	1.00	1.00
Ped-Bike Adj(A_pbT)	1.00		1.00	1.00		1.00	1.00		1.00	1.00		1.00
Parking Bus, Adj	1.00	1.00	1.00	1.00	1.00	1.00	1.00	1.00	1.00	1.00	1.00	1.00
Work Zone On Approach		No			No			No			No	
Adj Sat Flow, veh/h/ln	1870	1870	1870	1870	1870	1870	1870	1870	1870	1870	1870	1870
Adj Flow Rate, veh/h	179	679	45	104	515	112	75	60	97	97	22	119
Peak Hour Factor	0.67	0.67	0.67	0.67	0.67	0.67	0.67	0.67	0.67	0.67	0.67	0.67
Percent Heavy Veh, %	2	2	2	2	2	2	2	2	2	2	2	2
Cap, veh/h	234	986	65	135	685	148	96	51	515	112	15	515
Arrive On Green	0.13	0.29	0.29	0.08	0.24	0.24	0.33	0.33	0.33	0.33	0.33	0.33
Sat Flow, veh/h	1781	3383	224	1781	2905	629	0	157	1585	0	45	1585
Grp Volume(v), veh/h	179	356	368	104	314	313	135	0	97	119	0	119
Grp Sat Flow(s),veh/h/ln	1781	1777	1830	1781	1777	1757	157	0	1585	45	0	1585
Q Serve(g_s), s	5.7	10.4	10.4	3.4	9.6	9.7	0.0	0.0	2.6	0.0	0.0	3.2
Cycle Q Clear(g_c), s	5.7	10.4	10.4	3.4	9.6	9.7	19.0	0.0	2.6	19.0	0.0	3.2
Prop In Lane	1.00		0.12	1.00		0.36	0.56		1.00	0.82		1.00
Lane Grp Cap(c), veh/h	234	518	533	135	419	414	147	0	515	126	0	515
V/C Ratio(X)	0.77	0.69	0.69	0.77	0.75	0.76	0.92	0.00	0.19	0.94	0.00	0.23
Avail Cap(c_a), veh/h	762	1034	1065	274	547	541	147	0	515	126	0	515
HCM Platoon Ratio	1.00	1.00	1.00	1.00	1.00	1.00	1.00	1.00	1.00	1.00	1.00	1.00
Upstream Filter(I)	1.00	1.00	1.00	1.00	1.00	1.00	1.00	0.00	1.00	1.00	0.00	1.00
Uniform Delay (d), s/veh	24.5	18.4	18.4	26.5	20.7	20.8	22.3	0.0	14.2	26.9	0.0	14.4
Incr Delay (d2), s/veh	5.2	1.6	1.6	9.0	4.1	4.4	55.1	0.0	0.8	65.8	0.0	1.0
Initial Q Delay(d3), s/veh	0.0	0.0	0.0	0.0	0.0	0.0	0.0	0.0	0.0	0.0	0.0	0.0
%ile BackOfQ(50%),veh/ln	2.6	4.1	4.2	1.7	4.1	4.1	4.1	0.0	0.9	3.9	0.0	1.2
Unsig. Movement Delay, s/veh												
LnGrp Delay(d), s/veh	29.7	20.0	20.0	35.5	24.8	25.1	77.4	0.0	15.0	92.7	0.0	15.4
LnGrp LOS	C	B	B	D	C	C	E		B	F		B
Approach Vol, veh/h		903			731			232			238	
Approach Delay, s/veh		21.9			26.5			51.3			54.1	
Approach LOS		C			C			D			D	

Timer - Assigned Phs		2	3	4		6	7	8				
Phs Duration (G+Y+Rc), s		25.0	10.4	23.0		25.0	13.7	19.8				
Change Period (Y+Rc), s		6.0	6.0	6.0		6.0	6.0	6.0				
Max Green Setting (Gmax), s		19.0	9.0	34.0		19.0	25.0	18.0				
Max Q Clear Time (g_c+I1), s		21.0	5.4	12.4		21.0	7.7	11.7				
Green Ext Time (p_c), s		0.0	0.1	4.6		0.0	0.4	2.1				

Intersection Summary	
HCM 7th Control Delay, s/veh	30.4
HCM 7th LOS	C

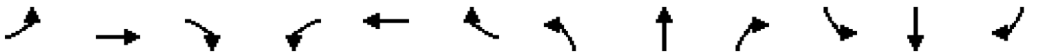

Movement	EBL	EBT	EBR	WBL	WBT	WBR	NBL	NBT	NBR	SBL	SBT	SBR
Lane Configurations												
Traffic Volume (veh/h)	105	375	220	225	525	25	120	40	125	70	35	45
Future Volume (veh/h)	105	375	220	225	525	25	120	40	125	70	35	45
Initial Q (Qb), veh	0	0	0	0	0	0	0	0	0	0	0	0
Lane Width Adj.	1.00	1.00	1.00	1.00	1.00	1.00	1.00	1.00	1.00	1.00	1.00	1.00
Ped-Bike Adj(A_pbT)	1.00		1.00	1.00		1.00	1.00		1.00	1.00		1.00
Parking Bus, Adj	1.00	1.00	1.00	1.00	1.00	1.00	1.00	1.00	1.00	1.00	1.00	1.00
Work Zone On Approach		No			No			No			No	
Adj Sat Flow, veh/h/ln	1870	1870	1870	1870	1870	1870	1870	1870	1870	1870	1870	1870
Adj Flow Rate, veh/h	136	487	286	292	682	32	156	52	162	91	45	58
Peak Hour Factor	0.77	0.77	0.77	0.77	0.77	0.77	0.77	0.77	0.77	0.77	0.77	0.77
Percent Heavy Veh, %	2	2	2	2	2	2	2	2	2	2	2	2
Cap, veh/h	173	570	333	307	1172	55	247	79	191	234	119	115
Arrive On Green	0.10	0.26	0.26	0.17	0.34	0.34	0.28	0.28	0.28	0.28	0.28	0.28
Sat Flow, veh/h	1781	2158	1262	1781	3456	162	590	279	677	537	421	409
Grp Volume(v), veh/h	136	401	372	292	350	364	370	0	0	194	0	0
Grp Sat Flow(s),veh/h/ln	1781	1777	1643	1781	1777	1841	1547	0	0	1367	0	0
Q Serve(g_s), s	4.8	13.7	13.8	10.4	10.4	10.4	7.0	0.0	0.0	0.0	0.0	0.0
Cycle Q Clear(g_c), s	4.8	13.7	13.8	10.4	10.4	10.4	14.2	0.0	0.0	7.2	0.0	0.0
Prop In Lane	1.00		0.77	1.00		0.09	0.42		0.44	0.47		0.30
Lane Grp Cap(c), veh/h	173	469	434	307	603	625	516	0	0	468	0	0
V/C Ratio(X)	0.79	0.85	0.86	0.95	0.58	0.58	0.72	0.00	0.00	0.41	0.00	0.00
Avail Cap(c_a), veh/h	223	501	463	307	603	625	516	0	0	468	0	0
HCM Platoon Ratio	1.00	1.00	1.00	1.00	1.00	1.00	1.00	1.00	1.00	1.00	1.00	1.00
Upstream Filter(I)	1.00	1.00	1.00	1.00	1.00	1.00	1.00	0.00	0.00	1.00	0.00	0.00
Uniform Delay (d), s/veh	28.2	22.3	22.4	26.2	17.4	17.4	21.3	0.0	0.0	18.8	0.0	0.0
Incr Delay (d2), s/veh	13.1	12.9	14.2	38.5	1.4	1.4	8.3	0.0	0.0	2.7	0.0	0.0
Initial Q Delay(d3), s/veh	0.0	0.0	0.0	0.0	0.0	0.0	0.0	0.0	0.0	0.0	0.0	0.0
%ile BackOfQ(50%),veh/ln	2.6	6.9	6.6	7.4	4.1	4.2	5.9	0.0	0.0	2.5	0.0	0.0
Unsig. Movement Delay, s/veh												
LnGrp Delay(d), s/veh	41.3	35.2	36.6	64.7	18.8	18.7	29.6	0.0	0.0	21.5	0.0	0.0
LnGrp LOS	D	D	D	E	B	B	C			C		
Approach Vol, veh/h		909			1006			370			194	
Approach Delay, s/veh		36.7			32.1			29.6			21.5	
Approach LOS		D			C			C			C	

Timer - Assigned Phs		2	3	4		6	7	8				
Phs Duration (G+Y+Rc), s		24.0	17.0	22.9		24.0	12.2	27.7				
Change Period (Y+Rc), s		6.0	6.0	6.0		6.0	6.0	6.0				
Max Green Setting (Gmax), s		18.0	11.0	18.0		18.0	8.0	21.0				
Max Q Clear Time (g_c+I1), s		16.2	12.4	15.8		9.2	6.8	12.4				
Green Ext Time (p_c), s		0.4	0.0	1.1		0.7	0.0	2.9				

Intersection Summary		
HCM 7th Control Delay, s/veh		32.6
HCM 7th LOS		C

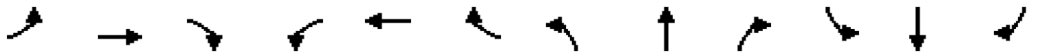

Movement	EBL	EBT	EBR	WBL	WBT	WBR	NBL	NBT	NBR	SBL	SBT	SBR
Lane Configurations												
Traffic Volume (veh/h)	70	615	40	505	770	25	40	110	510	130	130	80
Future Volume (veh/h)	70	615	40	505	770	25	40	110	510	130	130	80
Initial Q (Qb), veh	0	0	0	0	0	0	0	0	0	0	0	0
Lane Width Adj.	1.00	1.00	1.00	1.00	1.00	1.00	1.00	1.00	1.00	1.00	1.00	1.00
Ped-Bike Adj(A_pbT)	1.00		1.00	1.00		1.00	1.00		1.00	1.00		1.00
Parking Bus, Adj	1.00	1.00	1.00	1.00	1.00	1.00	1.00	1.00	1.00	1.00	1.00	1.00
Work Zone On Approach		No			No			No			No	
Adj Sat Flow, veh/h/ln	1870	1870	1870	1870	1870	1870	1870	1870	1870	1870	1870	1870
Adj Flow Rate, veh/h	89	778	51	639	975	32	51	139	646	165	165	101
Peak Hour Factor	0.79	0.79	0.79	0.79	0.79	0.79	0.79	0.79	0.79	0.79	0.79	0.79
Percent Heavy Veh, %	2	2	2	2	2	2	2	2	2	2	2	2
Cap, veh/h	114	1000	65	726	1230	40	345	657	557	294	352	219
Arrive On Green	0.06	0.20	0.20	0.21	0.35	0.35	0.35	0.35	0.35	0.35	0.35	0.35
Sat Flow, veh/h	1781	4897	320	3456	3511	115	1113	1870	1585	576	1003	623
Grp Volume(v), veh/h	89	540	289	639	493	514	51	139	646	173	0	258
Grp Sat Flow(s),veh/h/ln	1781	1702	1813	1728	1777	1850	1113	1870	1585	613	0	1590
Q Serve(g_s), s	3.8	11.5	11.6	13.8	19.2	19.2	2.9	4.0	27.0	17.0	0.0	9.6
Cycle Q Clear(g_c), s	3.8	11.5	11.6	13.8	19.2	19.2	12.5	4.0	27.0	21.0	0.0	9.6
Prop In Lane	1.00		0.18	1.00		0.06	1.00		1.00	0.95		0.39
Lane Grp Cap(c), veh/h	114	695	370	726	622	648	345	657	557	307	0	559
V/C Ratio(X)	0.78	0.78	0.78	0.88	0.79	0.79	0.15	0.21	1.16	0.57	0.00	0.46
Avail Cap(c_a), veh/h	139	797	425	765	671	698	345	657	557	307	0	559
HCM Platoon Ratio	1.00	1.00	1.00	1.00	1.00	1.00	1.00	1.00	1.00	1.00	1.00	1.00
Upstream Filter(I)	1.00	1.00	1.00	1.00	1.00	1.00	1.00	1.00	1.00	1.00	0.00	1.00
Uniform Delay (d), s/veh	35.4	28.9	28.9	29.4	22.4	22.4	24.1	17.5	24.9	24.6	0.0	19.3
Incr Delay (d2), s/veh	20.3	4.3	8.0	11.2	6.1	5.9	0.9	0.7	90.6	7.4	0.0	2.7
Initial Q Delay(d3), s/veh	0.0	0.0	0.0	0.0	0.0	0.0	0.0	0.0	0.0	0.0	0.0	0.0
%ile BackOfQ(50%),veh/ln	2.2	4.9	5.7	6.6	8.6	8.9	0.8	1.8	23.4	3.4	0.0	3.8
Unsig. Movement Delay, s/veh												
LnGrp Delay(d), s/veh	55.7	33.2	37.0	40.6	28.5	28.3	25.0	18.2	115.5	32.0	0.0	22.0
LnGrp LOS	E	C	D	D	C	C	C	B	F	C		C
Approach Vol, veh/h		918			1646			836			431	
Approach Delay, s/veh		36.5			33.1			93.8			26.0	
Approach LOS		D			C			F			C	

Timer - Assigned Phs		2	3	4		6	7	8				
Phs Duration (G+Y+Rc), s		33.0	22.1	21.7		33.0	10.9	32.9				
Change Period (Y+Rc), s		6.0	6.0	6.0		6.0	6.0	6.0				
Max Green Setting (Gmax), s		27.0	17.0	18.0		27.0	6.0	29.0				
Max Q Clear Time (g_c+I1), s		29.0	15.8	13.6		23.0	5.8	21.2				
Green Ext Time (p_c), s		0.0	0.4	2.1		1.2	0.0	3.9				

Intersection Summary												
HCM 7th Control Delay, s/veh			46.4									
HCM 7th LOS			D									

Future Year 2030 PM Peak Hour No Build

HCM 7th Signalized Intersection Summary
1: Kamehameha Hwy & Meheula Pkwy 11/06/2025

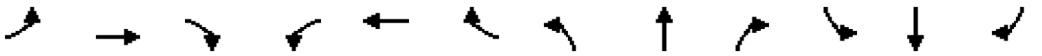

Movement	EBL	EBT	EBR	WBL	WBT	WBR	NBL	NBT	NBR	SBL	SBT	SBR
Lane Configurations												
Traffic Volume (veh/h)	130	255	25	165	330	260	80	370	115	230	300	185
Future Volume (veh/h)	130	255	25	165	330	260	80	370	115	230	300	185
Initial Q (Qb), veh	0	0	0	0	0	0	0	0	0	0	0	0
Lane Width Adj.	1.00	1.00	1.00	1.00	1.00	1.00	1.00	1.00	1.00	1.00	1.00	1.00
Ped-Bike Adj(A_pbT)	1.00		1.00	1.00		1.00	1.00		1.00	1.00		1.00
Parking Bus, Adj	1.00	1.00	1.00	1.00	1.00	1.00	1.00	1.00	1.00	1.00	1.00	1.00
Work Zone On Approach		No			No			No			No	
Adj Sat Flow, veh/h/ln	1870	1870	1870	1870	1870	1870	1870	1870	1870	1870	1870	1870
Adj Flow Rate, veh/h	140	274	0	177	355	0	86	398	0	247	323	0
Peak Hour Factor	0.93	0.93	0.93	0.93	0.93	0.93	0.93	0.93	0.93	0.93	0.93	0.93
Percent Heavy Veh, %	2	2	2	2	2	2	2	2	2	2	2	2
Cap, veh/h	176	462		202	514		111	905		289	1260	
Arrive On Green	0.10	0.13	0.00	0.11	0.14	0.00	0.06	0.25	0.00	0.16	0.35	0.00
Sat Flow, veh/h	1781	3554	1585	1781	3554	1585	1781	3554	1585	1781	3554	1585
Grp Volume(v), veh/h	140	274	0	177	355	0	86	398	0	247	323	0
Grp Sat Flow(s),veh/h/ln	1781	1777	1585	1781	1777	1585	1781	1777	1585	1781	1777	1585
Q Serve(g_s), s	5.4	5.1	0.0	6.9	6.7	0.0	3.4	6.6	0.0	9.5	4.6	0.0
Cycle Q Clear(g_c), s	5.4	5.1	0.0	6.9	6.7	0.0	3.4	6.6	0.0	9.5	4.6	0.0
Prop In Lane	1.00		1.00	1.00		1.00	1.00		1.00	1.00		1.00
Lane Grp Cap(c), veh/h	176	462		202	514		111	905		289	1260	
V/C Ratio(X)	0.80	0.59		0.88	0.69		0.77	0.44		0.85	0.26	
Avail Cap(c_a), veh/h	202	905		202	905		227	905		302	1260	
HCM Platoon Ratio	1.00	1.00	1.00	1.00	1.00	1.00	1.00	1.00	1.00	1.00	1.00	1.00
Upstream Filter(I)	1.00	1.00	0.00	1.00	1.00	0.00	1.00	1.00	0.00	1.00	1.00	0.00
Uniform Delay (d), s/veh	31.2	29.0	0.0	30.9	28.7	0.0	32.6	22.1	0.0	28.8	16.2	0.0
Incr Delay (d2), s/veh	17.5	1.2	0.0	32.5	1.7	0.0	10.8	1.6	0.0	19.9	0.5	0.0
Initial Q Delay(d3), s/veh	0.0	0.0	0.0	0.0	0.0	0.0	0.0	0.0	0.0	0.0	0.0	0.0
%ile BackOfQ(50%),veh/ln	3.1	2.2	0.0	4.7	2.9	0.0	1.7	2.8	0.0	5.5	1.8	0.0
Unsig. Movement Delay, s/veh												
LnGrp Delay(d), s/veh	48.7	30.2	0.0	63.4	30.4	0.0	43.4	23.7	0.0	48.7	16.7	0.0
LnGrp LOS	D	C		E	C		D	C		D	B	
Approach Vol, veh/h		414			532			484			570	
Approach Delay, s/veh		36.4			41.4			27.2			30.5	
Approach LOS		D			D			C			C	

Timer - Assigned Phs	1	2	3	4	5	6	7	8
Phs Duration (G+Y+Rc), s	17.5	24.0	14.0	15.2	10.4	31.1	13.0	16.2
Change Period (Y+Rc), s	6.0	6.0	6.0	6.0	6.0	6.0	6.0	6.0
Max Green Setting (Gmax), s	12.0	18.0	8.0	18.0	9.0	21.0	8.0	18.0
Max Q Clear Time (g_c+I1), s	11.5	8.6	8.9	7.1	5.4	6.6	7.4	8.7
Green Ext Time (p_c), s	0.0	1.7	0.0	1.2	0.1	1.7	0.0	1.5

Intersection Summary	
HCM 7th Control Delay, s/veh	33.8
HCM 7th LOS	C

Notes

Unsignalized Delay for [NBR, EBR, WBR, SBR] is excluded from calculations of the approach delay and intersection delay.

Intersection	
Int Delay, s/veh	0.1

Movement	EBT	EBR	WBL	WBT	NBL	NBR
Lane Configurations						
Traffic Vol, veh/h	550	5	0	585	5	0
Future Vol, veh/h	550	5	0	585	5	0
Conflicting Peds, #/hr	0	0	0	0	0	0
Sign Control	Free	Free	Free	Free	Stop	Stop
RT Channelized	-	None	-	None	-	None
Storage Length	-	-	75	-	0	-
Veh in Median Storage, #	0	-	-	0	0	-
Grade, %	0	-	-	0	0	-
Peak Hour Factor	87	87	87	87	87	87
Heavy Vehicles, %	2	2	2	2	2	2
Mvmt Flow	632	6	0	672	6	0

Major/Minor	Major1		Major2		Minor1	
Conflicting Flow All	0	0	638	0	971	319
Stage 1	-	-	-	-	635	-
Stage 2	-	-	-	-	336	-
Critical Hdwy	-	-	4.14	-	6.84	6.94
Critical Hdwy Stg 1	-	-	-	-	5.84	-
Critical Hdwy Stg 2	-	-	-	-	5.84	-
Follow-up Hdwy	-	-	2.22	-	3.52	3.32
Pot Cap-1 Maneuver	-	-	942	-	250	677
Stage 1	-	-	-	-	490	-
Stage 2	-	-	-	-	696	-
Platoon blocked, %	-	-		-		
Mov Cap-1 Maneuver	-	-	942	-	250	677
Mov Cap-2 Maneuver	-	-	-	-	250	-
Stage 1	-	-	-	-	490	-
Stage 2	-	-	-	-	696	-

Approach	EB	WB	NB
HCM Ctrl Dly, s/v	0	0	19.72
HCM LOS			C

HCM Lane V/C Ratio	0.023	-	-	-	-
HCM Ctrl Dly (s/v)	19.7	-	-	0	-
HCM Lane LOS	C	-	-	A	-
HCM 95th %tile Q(veh)	0.1	-	-	0	-

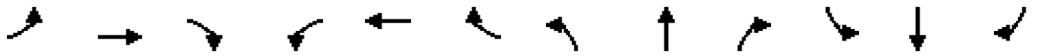

Movement	EBL	EBT	EBR	WBL	WBT	WBR	NBL	NBT	NBR	SBL	SBT	SBR
Lane Configurations												
Traffic Volume (veh/h)	20	475	60	75	535	20	45	5	55	25	5	20
Future Volume (veh/h)	20	475	60	75	535	20	45	5	55	25	5	20
Initial Q (Qb), veh	0	0	0	0	0	0	0	0	0	0	0	0
Lane Width Adj.	1.00	1.00	1.00	1.00	1.00	1.00	1.00	1.00	1.00	1.00	1.00	1.00
Ped-Bike Adj(A_pbT)	1.00		1.00	1.00		1.00	1.00		1.00	1.00		1.00
Parking Bus, Adj	1.00	1.00	1.00	1.00	1.00	1.00	1.00	1.00	1.00	1.00	1.00	1.00
Work Zone On Approach		No			No			No			No	
Adj Sat Flow, veh/h/ln	1870	1870	1870	1870	1870	1870	1870	1870	1870	1870	1870	1870
Adj Flow Rate, veh/h	23	546	69	86	615	23	52	6	63	29	6	23
Peak Hour Factor	0.87	0.87	0.87	0.87	0.87	0.87	0.87	0.87	0.87	0.87	0.87	0.87
Percent Heavy Veh, %	2	2	2	2	2	2	2	2	2	2	2	2
Cap, veh/h	48	765	96	122	985	37	132	8	548	127	15	548
Arrive On Green	0.03	0.24	0.24	0.07	0.28	0.28	0.35	0.35	0.35	0.35	0.35	0.35
Sat Flow, veh/h	1781	3175	400	1781	3493	131	2	24	1585	1	43	1585
Grp Volume(v), veh/h	23	305	310	86	313	325	58	0	63	35	0	23
Grp Sat Flow(s),veh/h/ln	1781	1777	1798	1781	1777	1847	26	0	1585	44	0	1585
Q Serve(g_s), s	0.7	8.2	8.2	2.5	8.0	8.0	0.0	0.0	1.4	0.0	0.0	0.5
Cycle Q Clear(g_c), s	0.7	8.2	8.2	2.5	8.0	8.0	18.0	0.0	1.4	18.0	0.0	0.5
Prop In Lane	1.00		0.22	1.00		0.07	0.90		1.00	0.83		1.00
Lane Grp Cap(c), veh/h	48	428	433	122	501	521	140	0	548	142	0	548
V/C Ratio(X)	0.48	0.71	0.72	0.71	0.62	0.62	0.41	0.00	0.12	0.25	0.00	0.04
Avail Cap(c_a), veh/h	171	614	621	205	648	673	140	0	548	142	0	548
HCM Platoon Ratio	1.00	1.00	1.00	1.00	1.00	1.00	1.00	1.00	1.00	1.00	1.00	1.00
Upstream Filter(I)	1.00	1.00	1.00	1.00	1.00	1.00	1.00	0.00	1.00	1.00	0.00	1.00
Uniform Delay (d), s/veh	25.0	18.1	18.1	23.8	16.3	16.3	23.5	0.0	11.6	18.5	0.0	11.3
Incr Delay (d2), s/veh	7.1	2.2	2.2	7.3	1.3	1.2	8.8	0.0	0.4	4.1	0.0	0.1
Initial Q Delay(d3), s/veh	0.0	0.0	0.0	0.0	0.0	0.0	0.0	0.0	0.0	0.0	0.0	0.0
%ile BackOfQ(50%),veh/ln	0.4	3.2	3.3	1.2	3.0	3.1	1.0	0.0	0.5	0.6	0.0	0.2
Unsig. Movement Delay, s/veh												
LnGrp Delay(d), s/veh	32.0	20.3	20.4	31.1	17.6	17.5	32.3	0.0	12.1	22.6	0.0	11.5
LnGrp LOS	C	C	C	C	B	B	C		B	C		B
Approach Vol, veh/h		638			724			121			58	
Approach Delay, s/veh		20.8			19.2			21.8			18.2	
Approach LOS		C			B			C			B	

Timer - Assigned Phs	2	3	4	6	7	8
Phs Duration (G+Y+Rc), s	24.0	9.6	18.6	24.0	7.4	20.7
Change Period (Y+Rc), s	6.0	6.0	6.0	6.0	6.0	6.0
Max Green Setting (Gmax), s	18.0	6.0	18.0	18.0	5.0	19.0
Max Q Clear Time (g_c+I1), s	20.0	4.5	10.2	20.0	2.7	10.0
Green Ext Time (p_c), s	0.0	0.0	2.3	0.0	0.0	2.6

Intersection Summary	
HCM 7th Control Delay, s/veh	20.0
HCM 7th LOS	B

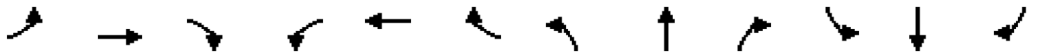

Movement	EBL	EBT	EBR	WBL	WBT	WBR	NBL	NBT	NBR	SBL	SBT	SBR
Lane Configurations												
Traffic Volume (veh/h)	85	250	260	250	440	20	275	40	220	55	30	50
Future Volume (veh/h)	85	250	260	250	440	20	275	40	220	55	30	50
Initial Q (Qb), veh	0	0	0	0	0	0	0	0	0	0	0	0
Lane Width Adj.	1.00	1.00	1.00	1.00	1.00	1.00	1.00	1.00	1.00	1.00	1.00	1.00
Ped-Bike Adj(A_pbT)	1.00		1.00	1.00		1.00	1.00		1.00	1.00		1.00
Parking Bus, Adj	1.00	1.00	1.00	1.00	1.00	1.00	1.00	1.00	1.00	1.00	1.00	1.00
Work Zone On Approach		No			No			No			No	
Adj Sat Flow, veh/h/ln	1870	1870	1870	1870	1870	1870	1870	1870	1870	1870	1870	1870
Adj Flow Rate, veh/h	92	272	283	272	478	22	299	43	239	60	33	54
Peak Hour Factor	0.92	0.92	0.92	0.92	0.92	0.92	0.92	0.92	0.92	0.92	0.92	0.92
Percent Heavy Veh, %	2	2	2	2	2	2	2	2	2	2	2	2
Cap, veh/h	118	352	314	298	1034	48	389	47	262	279	158	221
Arrive On Green	0.07	0.20	0.20	0.17	0.30	0.30	0.43	0.43	0.43	0.43	0.43	0.43
Sat Flow, veh/h	1781	1777	1585	1781	3460	159	756	109	604	513	365	509
Grp Volume(v), veh/h	92	272	283	272	245	255	581	0	0	147	0	0
Grp Sat Flow(s),veh/h/ln	1781	1777	1585	1781	1777	1842	1468	0	0	1387	0	0
Q Serve(g_s), s	4.6	13.0	15.6	13.5	10.1	10.1	27.9	0.0	0.0	0.0	0.0	0.0
Cycle Q Clear(g_c), s	4.6	13.0	15.6	13.5	10.1	10.1	33.1	0.0	0.0	5.2	0.0	0.0
Prop In Lane	1.00		1.00	1.00		0.09	0.51		0.41	0.41		0.37
Lane Grp Cap(c), veh/h	118	352	314	298	531	551	698	0	0	659	0	0
V/C Ratio(X)	0.78	0.77	0.90	0.91	0.46	0.46	0.83	0.00	0.00	0.22	0.00	0.00
Avail Cap(c_a), veh/h	179	356	318	298	531	551	698	0	0	659	0	0
HCM Platoon Ratio	1.00	1.00	1.00	1.00	1.00	1.00	1.00	1.00	1.00	1.00	1.00	1.00
Upstream Filter(I)	1.00	1.00	1.00	1.00	1.00	1.00	1.00	0.00	0.00	1.00	0.00	0.00
Uniform Delay (d), s/veh	41.3	34.1	35.1	36.8	25.6	25.6	23.5	0.0	0.0	15.7	0.0	0.0
Incr Delay (d2), s/veh	11.7	10.0	27.0	30.9	0.6	0.6	11.1	0.0	0.0	0.8	0.0	0.0
Initial Q Delay(d3), s/veh	0.0	0.0	0.0	0.0	0.0	0.0	0.0	0.0	0.0	0.0	0.0	0.0
%ile BackOfQ(50%),veh/ln	2.4	6.5	8.2	8.3	4.2	4.4	12.9	0.0	0.0	2.0	0.0	0.0
Unsig. Movement Delay, s/veh												
LnGrp Delay(d), s/veh	53.0	44.1	62.1	67.7	26.2	26.2	34.6	0.0	0.0	16.5	0.0	0.0
LnGrp LOS	D	D	E	E	C	C	C			B		
Approach Vol, veh/h		647			772			581			147	
Approach Delay, s/veh		53.2			40.8			34.6			16.5	
Approach LOS		D			D			C			B	

Timer - Assigned Phs		2	3	4		6	7	8				
Phs Duration (G+Y+Rc), s		45.0	21.0	23.8		45.0	11.9	32.8				
Change Period (Y+Rc), s		6.0	6.0	6.0		6.0	6.0	6.0				
Max Green Setting (Gmax), s		39.0	15.0	18.0		39.0	9.0	24.0				
Max Q Clear Time (g_c+I1), s		35.1	15.5	17.6		7.2	6.6	12.1				
Green Ext Time (p_c), s		1.5	0.0	0.1		1.0	0.0	2.3				

Intersection Summary	
HCM 7th Control Delay, s/veh	41.2
HCM 7th LOS	D

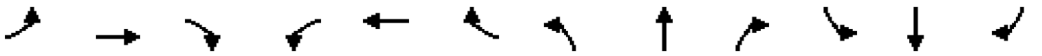

Movement	EBL	EBT	EBR	WBL	WBT	WBR	NBL	NBT	NBR	SBL	SBT	SBR
Lane Configurations												
Traffic Volume (veh/h)	65	465	35	725	750	55	25	130	640	30	150	90
Future Volume (veh/h)	65	465	35	725	750	55	25	130	640	30	150	90
Initial Q (Qb), veh	0	0	0	0	0	0	0	0	0	0	0	0
Lane Width Adj.	1.00	1.00	1.00	1.00	1.00	1.00	1.00	1.00	1.00	1.00	1.00	1.00
Ped-Bike Adj(A_pbT)	1.00		1.00	1.00		1.00	1.00		1.00	1.00		1.00
Parking Bus, Adj	1.00	1.00	1.00	1.00	1.00	1.00	1.00	1.00	1.00	1.00	1.00	1.00
Work Zone On Approach		No			No			No			No	
Adj Sat Flow, veh/h/ln	1870	1870	1870	1870	1870	1870	1870	1870	1870	1870	1870	1870
Adj Flow Rate, veh/h	68	489	37	763	789	58	26	137	674	32	158	95
Peak Hour Factor	0.95	0.95	0.95	0.95	0.95	0.95	0.95	0.95	0.95	0.95	0.95	0.95
Percent Heavy Veh, %	2	2	2	2	2	2	2	2	2	2	2	2
Cap, veh/h	88	641	48	878	1131	83	503	830	703	154	737	452
Arrive On Green	0.05	0.13	0.13	0.25	0.34	0.34	0.44	0.44	0.44	0.44	0.44	0.44
Sat Flow, veh/h	1781	4846	363	3456	3356	247	1127	1870	1585	254	1662	1019
Grp Volume(v), veh/h	68	342	184	763	418	429	26	137	674	143	0	142
Grp Sat Flow(s),veh/h/ln	1781	1702	1805	1728	1777	1826	1127	1870	1585	1417	0	1519
Q Serve(g_s), s	4.0	10.3	10.4	22.4	21.6	21.6	1.5	4.7	43.6	0.0	0.0	6.1
Cycle Q Clear(g_c), s	4.0	10.3	10.4	22.4	21.6	21.6	7.6	4.7	43.6	4.9	0.0	6.1
Prop In Lane	1.00		0.20	1.00		0.14	1.00		1.00	0.22		0.67
Lane Grp Cap(c), veh/h	88	451	239	878	599	616	503	830	703	670	0	674
V/C Ratio(X)	0.77	0.76	0.77	0.87	0.70	0.70	0.05	0.17	0.96	0.21	0.00	0.21
Avail Cap(c_a), veh/h	168	578	307	1207	755	776	503	830	703	670	0	674
HCM Platoon Ratio	1.00	1.00	1.00	1.00	1.00	1.00	1.00	1.00	1.00	1.00	1.00	1.00
Upstream Filter(I)	1.00	1.00	1.00	1.00	1.00	1.00	1.00	1.00	1.00	1.00	0.00	1.00
Uniform Delay (d), s/veh	49.8	44.3	44.4	37.8	30.4	30.4	20.4	17.7	28.5	17.8	0.0	18.1
Incr Delay (d2), s/veh	13.5	4.3	8.7	5.3	2.0	2.0	0.2	0.4	25.2	0.7	0.0	0.7
Initial Q Delay(d3), s/veh	0.0	0.0	0.0	0.0	0.0	0.0	0.0	0.0	0.0	0.0	0.0	0.0
%ile BackOfQ(50%),veh/ln	2.1	4.6	5.2	10.0	9.4	9.7	0.4	2.1	20.7	2.2	0.0	2.2
Unsig. Movement Delay, s/veh												
LnGrp Delay(d), s/veh	63.2	48.7	53.1	43.1	32.5	32.4	20.6	18.1	53.7	18.5	0.0	18.8
LnGrp LOS	E	D	D	D	C	C	C	B	D	B		B
Approach Vol, veh/h		594			1610			837			285	
Approach Delay, s/veh		51.7			37.5			46.8			18.6	
Approach LOS		D			D			D			B	

Timer - Assigned Phs		2	3	4		6	7	8				
Phs Duration (G+Y+Rc), s		53.0	32.9	20.0		53.0	11.2	41.7				
Change Period (Y+Rc), s		6.0	6.0	6.0		6.0	6.0	6.0				
Max Green Setting (Gmax), s		47.0	37.0	18.0		47.0	10.0	45.0				
Max Q Clear Time (g_c+I1), s		45.6	24.4	12.4		8.1	6.0	23.6				
Green Ext Time (p_c), s		0.6	2.5	1.6		2.1	0.0	5.6				

Intersection Summary	
HCM 7th Control Delay, s/veh	40.8
HCM 7th LOS	D

Future Year 2030 AM Peak Hour Build

HCM 7th Signalized Intersection Summary
1: Kamehameha Hwy & Meheula Pkwy 11/05/2025

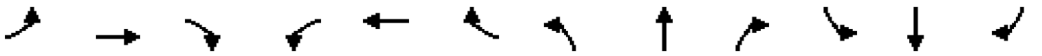

Movement	EBL	EBT	EBR	WBL	WBT	WBR	NBL	NBT	NBR	SBL	SBT	SBR
Lane Configurations												
Traffic Volume (veh/h)	190	343	35	144	251	272	30	365	131	216	275	115
Future Volume (veh/h)	190	343	35	144	251	272	30	365	131	216	275	115
Initial Q (Qb), veh	0	0	0	0	0	0	0	0	0	0	0	0
Lane Width Adj.	1.00	1.00	1.00	1.00	1.00	1.00	1.00	1.00	1.00	1.00	1.00	1.00
Ped-Bike Adj(A_pbT)	1.00		1.00	1.00		1.00	1.00		1.00	1.00		1.00
Parking Bus, Adj	1.00	1.00	1.00	1.00	1.00	1.00	1.00	1.00	1.00	1.00	1.00	1.00
Work Zone On Approach		No			No			No			No	
Adj Sat Flow, veh/h/ln	1870	1870	1870	1870	1870	1870	1870	1870	1870	1870	1870	1870
Adj Flow Rate, veh/h	244	440	0	185	322	0	38	468	0	277	353	0
Peak Hour Factor	0.78	0.78	0.78	0.78	0.78	0.78	0.78	0.78	0.78	0.78	0.78	0.78
Percent Heavy Veh, %	2	2	2	2	2	2	2	2	2	2	2	2
Cap, veh/h	242	595		224	559		65	869		242	1222	
Arrive On Green	0.14	0.17	0.00	0.13	0.16	0.00	0.04	0.24	0.00	0.14	0.34	0.00
Sat Flow, veh/h	1781	3554	1585	1781	3554	1585	1781	3554	1585	1781	3554	1585
Grp Volume(v), veh/h	244	440	0	185	322	0	38	468	0	277	353	0
Grp Sat Flow(s),veh/h/ln	1781	1777	1585	1781	1777	1585	1781	1777	1585	1781	1777	1585
Q Serve(g_s), s	10.0	8.7	0.0	7.5	6.2	0.0	1.5	8.4	0.0	10.0	5.3	0.0
Cycle Q Clear(g_c), s	10.0	8.7	0.0	7.5	6.2	0.0	1.5	8.4	0.0	10.0	5.3	0.0
Prop In Lane	1.00		1.00	1.00		1.00	1.00		1.00	1.00		1.00
Lane Grp Cap(c), veh/h	242	595		224	559		65	869		242	1222	
V/C Ratio(X)	1.01	0.74		0.82	0.58		0.58	0.54		1.14	0.29	
Avail Cap(c_a), veh/h	242	869		242	869		121	869		242	1222	
HCM Platoon Ratio	1.00	1.00	1.00	1.00	1.00	1.00	1.00	1.00	1.00	1.00	1.00	1.00
Upstream Filter(I)	1.00	1.00	0.00	1.00	1.00	0.00	1.00	1.00	0.00	1.00	1.00	0.00
Uniform Delay (d), s/veh	31.8	29.1	0.0	31.4	28.7	0.0	34.9	24.2	0.0	31.8	17.6	0.0
Incr Delay (d2), s/veh	59.9	1.9	0.0	19.1	0.9	0.0	7.9	2.4	0.0	102.3	0.6	0.0
Initial Q Delay(d3), s/veh	0.0	0.0	0.0	0.0	0.0	0.0	0.0	0.0	0.0	0.0	0.0	0.0
%ile BackOfQ(50%),veh/ln	8.2	3.7	0.0	4.3	2.6	0.0	0.8	3.7	0.0	11.0	2.2	0.0
Unsig. Movement Delay, s/veh												
LnGrp Delay(d), s/veh	91.7	31.0	0.0	50.5	29.7	0.0	42.8	26.6	0.0	134.1	18.2	0.0
LnGrp LOS	F	C		D	C		D	C		F	B	
Approach Vol, veh/h		684			507			506			630	
Approach Delay, s/veh		52.7			37.3			27.8			69.2	
Approach LOS		D			D			C			E	

Timer - Assigned Phs	1	2	3	4	5	6	7	8
Phs Duration (G+Y+Rc), s	16.0	24.0	15.3	18.3	8.7	31.3	16.0	17.6
Change Period (Y+Rc), s	6.0	6.0	6.0	6.0	6.0	6.0	6.0	6.0
Max Green Setting (Gmax), s	10.0	18.0	10.0	18.0	5.0	23.0	10.0	18.0
Max Q Clear Time (g_c+I1), s	12.0	10.4	9.5	10.7	3.5	7.3	12.0	8.2
Green Ext Time (p_c), s	0.0	1.8	0.0	1.7	0.0	2.0	0.0	1.4

Intersection Summary	
HCM 7th Control Delay, s/veh	48.4
HCM 7th LOS	D

Notes

Unsignalized Delay for [NBR, EBR, WBR, SBR] is excluded from calculations of the approach delay and intersection delay.

Intersection	
Int Delay, s/veh	1.3

Movement	EBL	EBT	EBR	WBL	WBT	WBR	NBL	NBT	NBR	SBL	SBT	SBR
Lane Configurations												
Traffic Vol, veh/h	5	700	0	5	565	7	5	0	5	21	0	17
Future Vol, veh/h	5	700	0	5	565	7	5	0	5	21	0	17
Conflicting Peds, #/hr	0	0	0	0	0	0	0	0	0	0	0	0
Sign Control	Free	Free	Free	Free	Free	Free	Stop	Stop	Stop	Stop	Stop	Stop
RT Channelized	-	-	None	-	-	None	-	-	None	-	-	None
Storage Length	75	-	-	75	-	-	-	-	-	-	-	-
Veh in Median Storage, #	-	0	-	-	0	-	-	0	-	-	0	-
Grade, %	-	0	-	-	0	-	-	0	-	-	0	-
Peak Hour Factor	71	71	71	71	71	71	71	71	71	71	71	71
Heavy Vehicles, %	2	2	2	2	2	2	2	2	2	2	2	2
Mvmt Flow	7	986	0	7	796	10	7	0	7	30	0	24

Major/Minor	Major1			Major2			Minor1			Minor2		
Conflicting Flow All	806	0	0	986	0	0	1412	1820	493	1322	1815	403
Stage 1	-	-	-	-	-	-	1000	1000	-	815	815	-
Stage 2	-	-	-	-	-	-	412	820	-	507	1000	-
Critical Hdwy	4.14	-	-	4.14	-	-	7.54	6.54	6.94	7.54	6.54	6.94
Critical Hdwy Stg 1	-	-	-	-	-	-	6.54	5.54	-	6.54	5.54	-
Critical Hdwy Stg 2	-	-	-	-	-	-	6.54	5.54	-	6.54	5.54	-
Follow-up Hdwy	2.22	-	-	2.22	-	-	3.52	4.02	3.32	3.52	4.02	3.32
Pot Cap-1 Maneuver	815	-	-	696	-	-	98	77	522	114	77	597
Stage 1	-	-	-	-	-	-	261	319	-	338	389	-
Stage 2	-	-	-	-	-	-	588	387	-	516	319	-
Platoon blocked, %		-	-		-	-						
Mov Cap-1 Maneuver	815	-	-	696	-	-	92	75	522	111	76	597
Mov Cap-2 Maneuver	-	-	-	-	-	-	92	75	-	111	76	-
Stage 1	-	-	-	-	-	-	258	316	-	334	385	-
Stage 2	-	-	-	-	-	-	559	383	-	505	316	-

Approach	EB	WB	NB	SB
HCM Ctrl Dly, s/v	0.07	0.09	30.2	34.58
HCM LOS			D	D

Minor Lane/Major Mvmt	NBLn1	EBL	EBT	EBR	WBL	WBT	WBR	SBLn1
Capacity (veh/h)	157	815	-	-	696	-	-	174
HCM Lane V/C Ratio	0.09	0.009	-	-	0.01	-	-	0.307
HCM Ctrl Dly (s/v)	30.2	9.5	-	-	10.2	-	-	34.6
HCM Lane LOS	D	A	-	-	B	-	-	D
HCM 95th %tile Q(veh)	0.3	0	-	-	0	-	-	1.2

Movement	EBL	EBT	EBR	WBL	WBT	WBR	NBL	NBT	NBR	SBL	SBT	SBR
Lane Configurations												
Traffic Volume (veh/h)	120	476	30	70	352	75	50	40	65	65	15	80
Future Volume (veh/h)	120	476	30	70	352	75	50	40	65	65	15	80
Initial Q (Qb), veh	0	0	0	0	0	0	0	0	0	0	0	0
Lane Width Adj.	1.00	1.00	1.00	1.00	1.00	1.00	1.00	1.00	1.00	1.00	1.00	1.00
Ped-Bike Adj(A_pbT)	1.00		1.00	1.00		1.00	1.00		1.00	1.00		1.00
Parking Bus, Adj	1.00	1.00	1.00	1.00	1.00	1.00	1.00	1.00	1.00	1.00	1.00	1.00
Work Zone On Approach		No			No			No			No	
Adj Sat Flow, veh/h/ln	1870	1870	1870	1870	1870	1870	1870	1870	1870	1870	1870	1870
Adj Flow Rate, veh/h	179	710	45	104	525	112	75	60	97	97	22	119
Peak Hour Factor	0.67	0.67	0.67	0.67	0.67	0.67	0.67	0.67	0.67	0.67	0.67	0.67
Percent Heavy Veh, %	2	2	2	2	2	2	2	2	2	2	2	2
Cap, veh/h	233	1019	65	135	714	152	94	50	508	110	14	508
Arrive On Green	0.13	0.30	0.30	0.08	0.24	0.24	0.32	0.32	0.32	0.32	0.32	0.32
Sat Flow, veh/h	1781	3394	215	1781	2916	619	0	157	1585	0	45	1585
Grp Volume(v), veh/h	179	372	383	104	319	318	135	0	97	119	0	119
Grp Sat Flow(s),veh/h/ln	1781	1777	1832	1781	1777	1759	157	0	1585	45	0	1585
Q Serve(g_s), s	5.8	11.0	11.0	3.4	9.8	9.9	0.0	0.0	2.6	0.0	0.0	3.3
Cycle Q Clear(g_c), s	5.8	11.0	11.0	3.4	9.8	9.9	19.0	0.0	2.6	19.0	0.0	3.3
Prop In Lane	1.00		0.12	1.00		0.35	0.56		1.00	0.82		1.00
Lane Grp Cap(c), veh/h	233	534	550	135	435	431	145	0	508	125	0	508
V/C Ratio(X)	0.77	0.70	0.70	0.77	0.73	0.74	0.93	0.00	0.19	0.96	0.00	0.23
Avail Cap(c_a), veh/h	751	1019	1051	270	540	534	145	0	508	125	0	508
HCM Platoon Ratio	1.00	1.00	1.00	1.00	1.00	1.00	1.00	1.00	1.00	1.00	1.00	1.00
Upstream Filter(I)	1.00	1.00	1.00	1.00	1.00	1.00	1.00	0.00	1.00	1.00	0.00	1.00
Uniform Delay (d), s/veh	24.9	18.3	18.4	26.9	20.6	20.6	22.8	0.0	14.6	27.4	0.0	14.8
Incr Delay (d2), s/veh	5.3	1.7	1.6	9.0	3.9	4.2	58.4	0.0	0.8	69.4	0.0	1.1
Initial Q Delay(d3), s/veh	0.0	0.0	0.0	0.0	0.0	0.0	0.0	0.0	0.0	0.0	0.0	0.0
%ile BackOfQ(50%),veh/ln	2.6	4.3	4.4	1.7	4.2	4.2	4.2	0.0	1.0	4.0	0.0	1.2
Unsig. Movement Delay, s/veh												
LnGrp Delay(d), s/veh	30.1	20.0	20.0	35.9	24.5	24.8	81.2	0.0	15.4	96.8	0.0	15.9
LnGrp LOS	C	C	B	D	C	C	F		B	F		B
Approach Vol, veh/h		934			741			232			238	
Approach Delay, s/veh		21.9			26.2			53.7			56.4	
Approach LOS		C			C			D			E	

Timer - Assigned Phs	2	3	4	6	7	8
Phs Duration (G+Y+Rc), s	25.0	10.5	23.8	25.0	13.8	20.5
Change Period (Y+Rc), s	6.0	6.0	6.0	6.0	6.0	6.0
Max Green Setting (Gmax), s	19.0	9.0	34.0	19.0	25.0	18.0
Max Q Clear Time (g_c+I1), s	21.0	5.4	13.0	21.0	7.8	11.9
Green Ext Time (p_c), s	0.0	0.1	4.8	0.0	0.4	2.0

Intersection Summary	
HCM 7th Control Delay, s/veh	30.7
HCM 7th LOS	C

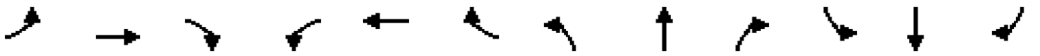

Movement	EBL	EBT	EBR	WBL	WBT	WBR	NBL	NBT	NBR	SBL	SBT	SBR
Lane Configurations												
Traffic Volume (veh/h)	105	396	220	225	532	25	120	40	125	70	35	45
Future Volume (veh/h)	105	396	220	225	532	25	120	40	125	70	35	45
Initial Q (Qb), veh	0	0	0	0	0	0	0	0	0	0	0	0
Lane Width Adj.	1.00	1.00	1.00	1.00	1.00	1.00	1.00	1.00	1.00	1.00	1.00	1.00
Ped-Bike Adj(A_pbT)	1.00		1.00	1.00		1.00	1.00		1.00	1.00		1.00
Parking Bus, Adj	1.00	1.00	1.00	1.00	1.00	1.00	1.00	1.00	1.00	1.00	1.00	1.00
Work Zone On Approach		No			No			No			No	
Adj Sat Flow, veh/h/ln	1870	1870	1870	1870	1870	1870	1870	1870	1870	1870	1870	1870
Adj Flow Rate, veh/h	136	514	286	292	691	32	156	52	162	91	45	58
Peak Hour Factor	0.77	0.77	0.77	0.77	0.77	0.77	0.77	0.77	0.77	0.77	0.77	0.77
Percent Heavy Veh, %	2	2	2	2	2	2	2	2	2	2	2	2
Cap, veh/h	173	591	328	305	1184	55	245	78	190	232	118	114
Arrive On Green	0.10	0.27	0.27	0.17	0.34	0.34	0.28	0.28	0.28	0.28	0.28	0.28
Sat Flow, veh/h	1781	2204	1223	1781	3458	160	590	278	677	535	421	408
Grp Volume(v), veh/h	136	414	386	292	355	368	370	0	0	194	0	0
Grp Sat Flow(s),veh/h/ln	1781	1777	1650	1781	1777	1842	1545	0	0	1364	0	0
Q Serve(g_s), s	4.8	14.3	14.3	10.4	10.5	10.6	7.1	0.0	0.0	0.0	0.0	0.0
Cycle Q Clear(g_c), s	4.8	14.3	14.3	10.4	10.5	10.6	14.3	0.0	0.0	7.2	0.0	0.0
Prop In Lane	1.00		0.74	1.00		0.09	0.42		0.44	0.47		0.30
Lane Grp Cap(c), veh/h	173	476	442	305	608	630	513	0	0	465	0	0
V/C Ratio(X)	0.79	0.87	0.87	0.96	0.58	0.58	0.72	0.00	0.00	0.42	0.00	0.00
Avail Cap(c_a), veh/h	222	498	463	305	608	630	513	0	0	465	0	0
HCM Platoon Ratio	1.00	1.00	1.00	1.00	1.00	1.00	1.00	1.00	1.00	1.00	1.00	1.00
Upstream Filter(I)	1.00	1.00	1.00	1.00	1.00	1.00	1.00	0.00	0.00	1.00	0.00	0.00
Uniform Delay (d), s/veh	28.3	22.4	22.5	26.4	17.4	17.4	21.6	0.0	0.0	19.0	0.0	0.0
Incr Delay (d2), s/veh	13.3	14.8	16.1	39.9	1.4	1.4	8.5	0.0	0.0	2.7	0.0	0.0
Initial Q Delay(d3), s/veh	0.0	0.0	0.0	0.0	0.0	0.0	0.0	0.0	0.0	0.0	0.0	0.0
%ile BackOfQ(50%),veh/ln	2.6	7.4	7.1	7.5	4.2	4.3	6.0	0.0	0.0	2.6	0.0	0.0
Unsig. Movement Delay, s/veh												
LnGrp Delay(d), s/veh	41.6	37.2	38.6	66.2	18.8	18.7	30.1	0.0	0.0	21.8	0.0	0.0
LnGrp LOS	D	D	D	E	B	B	C			C		
Approach Vol, veh/h		936			1015			370			194	
Approach Delay, s/veh		38.4			32.4			30.1			21.8	
Approach LOS		D			C			C			C	

Timer - Assigned Phs		2	3	4		6	7	8				
Phs Duration (G+Y+Rc), s		24.0	17.0	23.2		24.0	12.2	28.0				
Change Period (Y+Rc), s		6.0	6.0	6.0		6.0	6.0	6.0				
Max Green Setting (Gmax), s		18.0	11.0	18.0		18.0	8.0	21.0				
Max Q Clear Time (g_c+I1), s		16.3	12.4	16.3		9.2	6.8	12.6				
Green Ext Time (p_c), s		0.4	0.0	0.9		0.7	0.0	2.9				

Intersection Summary												
HCM 7th Control Delay, s/veh			33.5									
HCM 7th LOS			C									

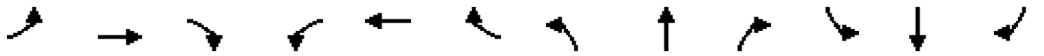

Movement	EBL	EBT	EBR	WBL	WBT	WBR	NBL	NBT	NBR	SBL	SBT	SBR
Lane Configurations												
Traffic Volume (veh/h)	72	633	41	505	776	25	40	110	510	130	130	81
Future Volume (veh/h)	72	633	41	505	776	25	40	110	510	130	130	81
Initial Q (Qb), veh	0	0	0	0	0	0	0	0	0	0	0	0
Lane Width Adj.	1.00	1.00	1.00	1.00	1.00	1.00	1.00	1.00	1.00	1.00	1.00	1.00
Ped-Bike Adj(A_pbT)	1.00		1.00	1.00		1.00	1.00		1.00	1.00		1.00
Parking Bus, Adj	1.00	1.00	1.00	1.00	1.00	1.00	1.00	1.00	1.00	1.00	1.00	1.00
Work Zone On Approach		No			No			No			No	
Adj Sat Flow, veh/h/ln	1870	1870	1870	1870	1870	1870	1870	1870	1870	1870	1870	1870
Adj Flow Rate, veh/h	91	801	52	639	982	32	51	139	646	165	165	103
Peak Hour Factor	0.79	0.79	0.79	0.79	0.79	0.79	0.79	0.79	0.79	0.79	0.79	0.79
Percent Heavy Veh, %	2	2	2	2	2	2	2	2	2	2	2	2
Cap, veh/h	117	1015	66	725	1235	40	341	654	554	292	348	221
Arrive On Green	0.07	0.21	0.21	0.21	0.35	0.35	0.35	0.35	0.35	0.35	0.35	0.35
Sat Flow, veh/h	1781	4900	317	3456	3512	114	1111	1870	1585	575	996	632
Grp Volume(v), veh/h	91	556	297	639	497	517	51	139	646	174	0	259
Grp Sat Flow(s),veh/h/ln	1781	1702	1813	1728	1777	1850	1111	1870	1585	614	0	1588
Q Serve(g_s), s	3.9	11.9	12.0	13.8	19.4	19.4	2.9	4.0	27.0	17.1	0.0	9.8
Cycle Q Clear(g_c), s	3.9	11.9	12.0	13.8	19.4	19.4	12.7	4.0	27.0	21.2	0.0	9.8
Prop In Lane	1.00		0.17	1.00		0.06	1.00		1.00	0.95		0.40
Lane Grp Cap(c), veh/h	117	705	376	725	625	650	341	654	554	306	0	556
V/C Ratio(X)	0.78	0.79	0.79	0.88	0.80	0.80	0.15	0.21	1.17	0.57	0.00	0.47
Avail Cap(c_a), veh/h	138	794	423	761	668	695	341	654	554	306	0	556
HCM Platoon Ratio	1.00	1.00	1.00	1.00	1.00	1.00	1.00	1.00	1.00	1.00	1.00	1.00
Upstream Filter(I)	1.00	1.00	1.00	1.00	1.00	1.00	1.00	1.00	1.00	1.00	0.00	1.00
Uniform Delay (d), s/veh	35.5	29.0	29.0	29.6	22.5	22.5	24.4	17.6	25.1	24.9	0.0	19.5
Incr Delay (d2), s/veh	21.0	4.8	8.9	11.4	6.3	6.0	0.9	0.7	92.6	7.5	0.0	2.8
Initial Q Delay(d3), s/veh	0.0	0.0	0.0	0.0	0.0	0.0	0.0	0.0	0.0	0.0	0.0	0.0
%ile BackOfQ(50%),veh/ln	2.3	5.2	5.9	6.6	8.7	9.0	0.8	1.8	23.7	3.4	0.0	3.8
Unsig. Movement Delay, s/veh												
LnGrp Delay(d), s/veh	56.5	33.8	37.9	40.9	28.8	28.6	25.3	18.4	117.7	32.4	0.0	22.3
LnGrp LOS	E	C	D	D	C	C	C	B	F	C		C
Approach Vol, veh/h		944			1653			836			433	
Approach Delay, s/veh		37.3			33.4			95.6			26.3	
Approach LOS		D			C			F			C	

Timer - Assigned Phs		2	3	4		6	7	8				
Phs Duration (G+Y+Rc), s		33.0	22.2	22.0		33.0	11.0	33.1				
Change Period (Y+Rc), s		6.0	6.0	6.0		6.0	6.0	6.0				
Max Green Setting (Gmax), s		27.0	17.0	18.0		27.0	6.0	29.0				
Max Q Clear Time (g_c+I1), s		29.0	15.8	14.0		23.2	5.9	21.4				
Green Ext Time (p_c), s		0.0	0.4	2.0		1.2	0.0	3.8				

Intersection Summary												
HCM 7th Control Delay, s/veh			47.0									
HCM 7th LOS			D									

Future Year 2030 PM Peak Hour Build

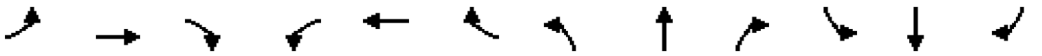

Movement	EBL	EBT	EBR	WBL	WBT	WBR	NBL	NBT	NBR	SBL	SBT	SBR
Lane Configurations												
Traffic Volume (veh/h)	130	262	25	167	336	264	80	370	118	237	300	185
Future Volume (veh/h)	130	262	25	167	336	264	80	370	118	237	300	185
Initial Q (Qb), veh	0	0	0	0	0	0	0	0	0	0	0	0
Lane Width Adj.	1.00	1.00	1.00	1.00	1.00	1.00	1.00	1.00	1.00	1.00	1.00	1.00
Ped-Bike Adj(A_pbT)	1.00		1.00	1.00		1.00	1.00		1.00	1.00		1.00
Parking Bus, Adj	1.00	1.00	1.00	1.00	1.00	1.00	1.00	1.00	1.00	1.00	1.00	1.00
Work Zone On Approach		No			No			No			No	
Adj Sat Flow, veh/h/ln	1870	1870	1870	1870	1870	1870	1870	1870	1870	1870	1870	1870
Adj Flow Rate, veh/h	140	282	0	180	361	0	86	398	0	255	323	0
Peak Hour Factor	0.93	0.93	0.93	0.93	0.93	0.93	0.93	0.93	0.93	0.93	0.93	0.93
Percent Heavy Veh, %	2	2	2	2	2	2	2	2	2	2	2	2
Cap, veh/h	176	470		200	519		111	897		296	1267	
Arrive On Green	0.10	0.13	0.00	0.11	0.15	0.00	0.06	0.25	0.00	0.17	0.36	0.00
Sat Flow, veh/h	1781	3554	1585	1781	3554	1585	1781	3554	1585	1781	3554	1585
Grp Volume(v), veh/h	140	282	0	180	361	0	86	398	0	255	323	0
Grp Sat Flow(s),veh/h/ln	1781	1777	1585	1781	1777	1585	1781	1777	1585	1781	1777	1585
Q Serve(g_s), s	5.5	5.3	0.0	7.1	6.9	0.0	3.4	6.7	0.0	9.9	4.6	0.0
Cycle Q Clear(g_c), s	5.5	5.3	0.0	7.1	6.9	0.0	3.4	6.7	0.0	9.9	4.6	0.0
Prop In Lane	1.00		1.00	1.00		1.00	1.00		1.00	1.00		1.00
Lane Grp Cap(c), veh/h	176	470		200	519		111	897		296	1267	
V/C Ratio(X)	0.80	0.60		0.90	0.70		0.77	0.44		0.86	0.26	
Avail Cap(c_a), veh/h	200	897		200	897		225	897		300	1267	
HCM Platoon Ratio	1.00	1.00	1.00	1.00	1.00	1.00	1.00	1.00	1.00	1.00	1.00	1.00
Upstream Filter(I)	1.00	1.00	0.00	1.00	1.00	0.00	1.00	1.00	0.00	1.00	1.00	0.00
Uniform Delay (d), s/veh	31.4	29.2	0.0	31.3	28.9	0.0	32.9	22.4	0.0	28.9	16.2	0.0
Incr Delay (d2), s/veh	17.8	1.2	0.0	37.5	1.7	0.0	10.8	1.6	0.0	21.4	0.5	0.0
Initial Q Delay(d3), s/veh	0.0	0.0	0.0	0.0	0.0	0.0	0.0	0.0	0.0	0.0	0.0	0.0
%ile BackOfQ(50%),veh/ln	3.1	2.3	0.0	5.0	2.9	0.0	1.8	2.9	0.0	5.8	1.8	0.0
Unsig. Movement Delay, s/veh												
LnGrp Delay(d), s/veh	49.3	30.4	0.0	68.7	30.6	0.0	43.7	24.0	0.0	50.3	16.7	0.0
LnGrp LOS	D	C		E	C		D	C		D	B	
Approach Vol, veh/h		422			541			484			578	
Approach Delay, s/veh		36.7			43.3			27.5			31.5	
Approach LOS		D			D			C			C	

Timer - Assigned Phs	1	2	3	4	5	6	7	8
Phs Duration (G+Y+Rc), s	17.9	24.0	14.0	15.4	10.5	31.4	13.0	16.4
Change Period (Y+Rc), s	6.0	6.0	6.0	6.0	6.0	6.0	6.0	6.0
Max Green Setting (Gmax), s	12.0	18.0	8.0	18.0	9.0	21.0	8.0	18.0
Max Q Clear Time (g_c+I1), s	11.9	8.7	9.1	7.3	5.4	6.6	7.5	8.9
Green Ext Time (p_c), s	0.0	1.7	0.0	1.2	0.1	1.7	0.0	1.5

Intersection Summary	
HCM 7th Control Delay, s/veh	34.8
HCM 7th LOS	C

Notes

Unsignalized Delay for [NBR, EBR, WBR, SBR] is excluded from calculations of the approach delay and intersection delay.

Intersection	
Int Delay, s/veh	0.5

Movement	EBL	EBT	EBR	WBL	WBT	WBR	NBL	NBT	NBR	SBL	SBT	SBR
Lane Configurations												
Traffic Vol, veh/h	17	550	5	0	585	20	5	0	0	9	0	12
Future Vol, veh/h	17	550	5	0	585	20	5	0	0	9	0	12
Conflicting Peds, #/hr	0	0	0	0	0	0	0	0	0	0	0	0
Sign Control	Free	Free	Free	Free	Free	Free	Stop	Stop	Stop	Stop	Stop	Stop
RT Channelized	-	-	None	-	-	None	-	-	None	-	-	None
Storage Length	75	-	-	75	-	-	-	-	-	-	-	-
Veh in Median Storage, #	-	0	-	-	0	-	-	0	-	-	0	-
Grade, %	-	0	-	-	0	-	-	0	-	-	0	-
Peak Hour Factor	87	87	87	87	87	87	87	87	87	87	87	87
Heavy Vehicles, %	2	2	2	2	2	2	2	2	2	2	2	2
Mvmt Flow	20	632	6	0	672	23	6	0	0	10	0	14

Major/Minor	Major1			Major2			Minor1			Minor2		
Conflicting Flow All	695	0	0	638	0	0	1010	1370	319	1039	1361	348
Stage 1	-	-	-	-	-	-	674	674	-	684	684	-
Stage 2	-	-	-	-	-	-	336	695	-	355	677	-
Critical Hdwy	4.14	-	-	4.14	-	-	7.54	6.54	6.94	7.54	6.54	6.94
Critical Hdwy Stg 1	-	-	-	-	-	-	6.54	5.54	-	6.54	5.54	-
Critical Hdwy Stg 2	-	-	-	-	-	-	6.54	5.54	-	6.54	5.54	-
Follow-up Hdwy	2.22	-	-	2.22	-	-	3.52	4.02	3.32	3.52	4.02	3.32
Pot Cap-1 Maneuver	896	-	-	942	-	-	194	145	677	185	147	648
Stage 1	-	-	-	-	-	-	410	452	-	405	447	-
Stage 2	-	-	-	-	-	-	652	442	-	635	450	-
Platoon blocked, %		-	-		-	-						
Mov Cap-1 Maneuver	896	-	-	942	-	-	186	142	677	181	144	648
Mov Cap-2 Maneuver	-	-	-	-	-	-	186	142	-	181	144	-
Stage 1	-	-	-	-	-	-	401	442	-	405	447	-
Stage 2	-	-	-	-	-	-	638	442	-	621	440	-

Approach	EB	WB	NB	SB
HCM Ctrl Dly, s/v	0.27	0	25	17.7
HCM LOS			D	C

Minor Lane/Major Mvmt	NBLn1	EBL	EBT	EBR	WBL	WBT	WBR	SBLn1
Capacity (veh/h)	186	896	-	-	942	-	-	307
HCM Lane V/C Ratio	0.031	0.022	-	-	-	-	-	0.078
HCM Ctrl Dly (s/v)	25	9.1	-	-	0	-	-	17.7
HCM Lane LOS	D	A	-	-	A	-	-	C
HCM 95th %tile Q(veh)	0.1	0.1	-	-	0	-	-	0.3

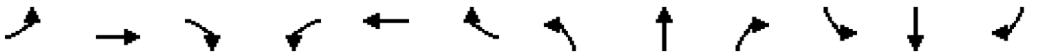

Movement	EBL	EBT	EBR	WBL	WBT	WBR	NBL	NBT	NBR	SBL	SBT	SBR
Lane Configurations												
Traffic Volume (veh/h)	20	484	60	75	555	20	45	5	55	25	5	20
Future Volume (veh/h)	20	484	60	75	555	20	45	5	55	25	5	20
Initial Q (Qb), veh	0	0	0	0	0	0	0	0	0	0	0	0
Lane Width Adj.	1.00	1.00	1.00	1.00	1.00	1.00	1.00	1.00	1.00	1.00	1.00	1.00
Ped-Bike Adj(A_pbT)	1.00		1.00	1.00		1.00	1.00		1.00	1.00		1.00
Parking Bus, Adj	1.00	1.00	1.00	1.00	1.00	1.00	1.00	1.00	1.00	1.00	1.00	1.00
Work Zone On Approach		No			No			No			No	
Adj Sat Flow, veh/h/ln	1870	1870	1870	1870	1870	1870	1870	1870	1870	1870	1870	1870
Adj Flow Rate, veh/h	23	556	69	86	638	23	52	6	63	29	6	23
Peak Hour Factor	0.87	0.87	0.87	0.87	0.87	0.87	0.87	0.87	0.87	0.87	0.87	0.87
Percent Heavy Veh, %	2	2	2	2	2	2	2	2	2	2	2	2
Cap, veh/h	48	774	96	121	995	36	131	8	546	126	15	546
Arrive On Green	0.03	0.24	0.24	0.07	0.28	0.28	0.34	0.34	0.34	0.34	0.34	0.34
Sat Flow, veh/h	1781	3182	394	1781	3498	126	2	24	1585	1	43	1585
Grp Volume(v), veh/h	23	310	315	86	324	337	58	0	63	35	0	23
Grp Sat Flow(s),veh/h/ln	1781	1777	1799	1781	1777	1848	26	0	1585	44	0	1585
Q Serve(g_s), s	0.7	8.4	8.4	2.5	8.3	8.4	0.0	0.0	1.4	0.0	0.0	0.5
Cycle Q Clear(g_c), s	0.7	8.4	8.4	2.5	8.3	8.4	18.0	0.0	1.4	18.0	0.0	0.5
Prop In Lane	1.00		0.22	1.00		0.07	0.90		1.00	0.83		1.00
Lane Grp Cap(c), veh/h	48	432	438	121	505	525	140	0	546	141	0	546
V/C Ratio(X)	0.48	0.72	0.72	0.71	0.64	0.64	0.42	0.00	0.12	0.25	0.00	0.04
Avail Cap(c_a), veh/h	170	612	620	204	646	671	140	0	546	141	0	546
HCM Platoon Ratio	1.00	1.00	1.00	1.00	1.00	1.00	1.00	1.00	1.00	1.00	1.00	1.00
Upstream Filter(I)	1.00	1.00	1.00	1.00	1.00	1.00	1.00	0.00	1.00	1.00	0.00	1.00
Uniform Delay (d), s/veh	25.1	18.1	18.2	23.8	16.4	16.4	23.6	0.0	11.7	18.6	0.0	11.4
Incr Delay (d2), s/veh	7.1	2.3	2.4	7.3	1.4	1.3	8.9	0.0	0.4	4.2	0.0	0.1
Initial Q Delay(d3), s/veh	0.0	0.0	0.0	0.0	0.0	0.0	0.0	0.0	0.0	0.0	0.0	0.0
%ile BackOfQ(50%),veh/ln	0.4	3.3	3.4	1.2	3.2	3.3	1.0	0.0	0.5	0.6	0.0	0.2
Unsig. Movement Delay, s/veh												
LnGrp Delay(d), s/veh	32.1	20.5	20.5	31.2	17.8	17.7	32.5	0.0	12.1	22.8	0.0	11.6
LnGrp LOS	C	C	C	C	B	B	C		B	C		B
Approach Vol, veh/h		648			747			121			58	
Approach Delay, s/veh		20.9			19.3			21.9			18.3	
Approach LOS		C			B			C			B	

Timer - Assigned Phs		2	3	4		6	7	8				
Phs Duration (G+Y+Rc), s		24.0	9.6	18.7		24.0	7.4	20.9				
Change Period (Y+Rc), s		6.0	6.0	6.0		6.0	6.0	6.0				
Max Green Setting (Gmax), s		18.0	6.0	18.0		18.0	5.0	19.0				
Max Q Clear Time (g_c+I1), s		20.0	4.5	10.4		20.0	2.7	10.4				
Green Ext Time (p_c), s		0.0	0.0	2.3		0.0	0.0	2.7				

Intersection Summary	
HCM 7th Control Delay, s/veh	20.1
HCM 7th LOS	C

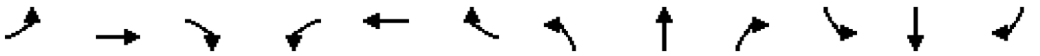

Movement	EBL	EBT	EBR	WBL	WBT	WBR	NBL	NBT	NBR	SBL	SBT	SBR
Lane Configurations												
Traffic Volume (veh/h)	85	259	260	250	460	20	275	40	220	55	30	50
Future Volume (veh/h)	85	259	260	250	460	20	275	40	220	55	30	50
Initial Q (Qb), veh	0	0	0	0	0	0	0	0	0	0	0	0
Lane Width Adj.	1.00	1.00	1.00	1.00	1.00	1.00	1.00	1.00	1.00	1.00	1.00	1.00
Ped-Bike Adj(A_pbT)	1.00		1.00	1.00		1.00	1.00		1.00	1.00		1.00
Parking Bus, Adj	1.00	1.00	1.00	1.00	1.00	1.00	1.00	1.00	1.00	1.00	1.00	1.00
Work Zone On Approach		No			No			No			No	
Adj Sat Flow, veh/h/ln	1870	1870	1870	1870	1870	1870	1870	1870	1870	1870	1870	1870
Adj Flow Rate, veh/h	92	282	283	272	500	22	299	43	239	60	33	54
Peak Hour Factor	0.92	0.92	0.92	0.92	0.92	0.92	0.92	0.92	0.92	0.92	0.92	0.92
Percent Heavy Veh, %	2	2	2	2	2	2	2	2	2	2	2	2
Cap, veh/h	118	352	314	298	1037	46	389	47	262	279	158	221
Arrive On Green	0.07	0.20	0.20	0.17	0.30	0.30	0.43	0.43	0.43	0.43	0.43	0.43
Sat Flow, veh/h	1781	1777	1585	1781	3467	152	756	109	604	513	365	509
Grp Volume(v), veh/h	92	282	283	272	256	266	581	0	0	147	0	0
Grp Sat Flow(s),veh/h/ln	1781	1777	1585	1781	1777	1843	1468	0	0	1387	0	0
Q Serve(g_s), s	4.6	13.6	15.6	13.5	10.6	10.6	27.9	0.0	0.0	0.0	0.0	0.0
Cycle Q Clear(g_c), s	4.6	13.6	15.6	13.5	10.6	10.6	33.1	0.0	0.0	5.2	0.0	0.0
Prop In Lane	1.00		1.00	1.00		0.08	0.51		0.41	0.41		0.37
Lane Grp Cap(c), veh/h	118	352	314	298	531	551	698	0	0	659	0	0
V/C Ratio(X)	0.78	0.80	0.90	0.91	0.48	0.48	0.83	0.00	0.00	0.22	0.00	0.00
Avail Cap(c_a), veh/h	179	356	318	298	531	551	698	0	0	659	0	0
HCM Platoon Ratio	1.00	1.00	1.00	1.00	1.00	1.00	1.00	1.00	1.00	1.00	1.00	1.00
Upstream Filter(I)	1.00	1.00	1.00	1.00	1.00	1.00	1.00	0.00	0.00	1.00	0.00	0.00
Uniform Delay (d), s/veh	41.3	34.3	35.1	36.8	25.8	25.8	23.5	0.0	0.0	15.7	0.0	0.0
Incr Delay (d2), s/veh	11.7	12.2	27.0	30.9	0.7	0.7	11.1	0.0	0.0	0.8	0.0	0.0
Initial Q Delay(d3), s/veh	0.0	0.0	0.0	0.0	0.0	0.0	0.0	0.0	0.0	0.0	0.0	0.0
%ile BackOfQ(50%),veh/ln	2.4	6.9	8.2	8.3	4.5	4.6	12.9	0.0	0.0	2.0	0.0	0.0
Unsig. Movement Delay, s/veh												
LnGrp Delay(d), s/veh	53.0	46.5	62.1	67.7	26.4	26.4	34.6	0.0	0.0	16.5	0.0	0.0
LnGrp LOS	D	D	E	E	C	C	C			B		
Approach Vol, veh/h		657			794			581			147	
Approach Delay, s/veh		54.1			40.6			34.6			16.5	
Approach LOS		D			D			C			B	

Timer - Assigned Phs		2	3	4		6	7	8				
Phs Duration (G+Y+Rc), s		45.0	21.0	23.8		45.0	11.9	32.8				
Change Period (Y+Rc), s		6.0	6.0	6.0		6.0	6.0	6.0				
Max Green Setting (Gmax), s		39.0	15.0	18.0		39.0	9.0	24.0				
Max Q Clear Time (g_c+I1), s		35.1	15.5	17.6		7.2	6.6	12.6				
Green Ext Time (p_c), s		1.5	0.0	0.1		1.0	0.0	2.4				

Intersection Summary	
HCM 7th Control Delay, s/veh	41.4
HCM 7th LOS	D

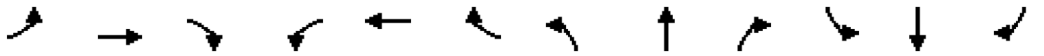

Movement	EBL	EBT	EBR	WBL	WBT	WBR	NBL	NBT	NBR	SBL	SBT	SBR
Lane Configurations												
Traffic Volume (veh/h)	67	472	35	725	767	55	26	130	640	30	150	92
Future Volume (veh/h)	67	472	35	725	767	55	26	130	640	30	150	92
Initial Q (Qb), veh	0	0	0	0	0	0	0	0	0	0	0	0
Lane Width Adj.	1.00	1.00	1.00	1.00	1.00	1.00	1.00	1.00	1.00	1.00	1.00	1.00
Ped-Bike Adj(A_pbT)	1.00		1.00	1.00		1.00	1.00		1.00	1.00		1.00
Parking Bus, Adj	1.00	1.00	1.00	1.00	1.00	1.00	1.00	1.00	1.00	1.00	1.00	1.00
Work Zone On Approach		No			No			No			No	
Adj Sat Flow, veh/h/ln	1870	1870	1870	1870	1870	1870	1870	1870	1870	1870	1870	1870
Adj Flow Rate, veh/h	71	497	37	763	807	58	27	137	674	32	158	97
Peak Hour Factor	0.95	0.95	0.95	0.95	0.95	0.95	0.95	0.95	0.95	0.95	0.95	0.95
Percent Heavy Veh, %	2	2	2	2	2	2	2	2	2	2	2	2
Cap, veh/h	92	648	48	878	1130	81	501	828	702	153	731	457
Arrive On Green	0.05	0.13	0.13	0.25	0.34	0.34	0.44	0.44	0.44	0.44	0.44	0.44
Sat Flow, veh/h	1781	4852	358	3456	3362	242	1125	1870	1585	253	1651	1033
Grp Volume(v), veh/h	71	347	187	763	426	439	27	137	674	145	0	142
Grp Sat Flow(s),veh/h/ln	1781	1702	1806	1728	1777	1827	1125	1870	1585	1421	0	1516
Q Serve(g_s), s	4.2	10.4	10.6	22.4	22.2	22.3	1.6	4.7	43.7	0.0	0.0	6.1
Cycle Q Clear(g_c), s	4.2	10.4	10.6	22.4	22.2	22.3	7.7	4.7	43.7	5.0	0.0	6.1
Prop In Lane	1.00		0.20	1.00		0.13	1.00		1.00	0.22		0.68
Lane Grp Cap(c), veh/h	92	455	241	878	597	614	501	828	702	671	0	671
V/C Ratio(X)	0.78	0.76	0.77	0.87	0.71	0.71	0.05	0.17	0.96	0.22	0.00	0.21
Avail Cap(c_a), veh/h	168	577	306	1205	753	775	501	828	702	671	0	671
HCM Platoon Ratio	1.00	1.00	1.00	1.00	1.00	1.00	1.00	1.00	1.00	1.00	1.00	1.00
Upstream Filter(I)	1.00	1.00	1.00	1.00	1.00	1.00	1.00	1.00	1.00	1.00	0.00	1.00
Uniform Delay (d), s/veh	49.7	44.4	44.4	37.9	30.8	30.8	20.6	17.8	28.7	17.9	0.0	18.2
Incr Delay (d2), s/veh	13.0	4.6	9.1	5.3	2.4	2.3	0.2	0.4	25.5	0.7	0.0	0.7
Initial Q Delay(d3), s/veh	0.0	0.0	0.0	0.0	0.0	0.0	0.0	0.0	0.0	0.0	0.0	0.0
%ile BackOfQ(50%),veh/ln	2.2	4.7	5.3	10.0	9.7	10.0	0.4	2.1	20.8	2.3	0.0	2.3
Unsig. Movement Delay, s/veh												
LnGrp Delay(d), s/veh	62.8	48.9	53.5	43.2	33.1	33.1	20.8	18.2	54.2	18.6	0.0	18.9
LnGrp LOS	E	D	D	D	C	C	C	B	D	B		B
Approach Vol, veh/h		605			1628			838			287	
Approach Delay, s/veh		52.0			37.8			47.2			18.7	
Approach LOS		D			D			D			B	

Timer - Assigned Phs		2	3	4		6	7	8				
Phs Duration (G+Y+Rc), s		53.0	33.0	20.2		53.0	11.5	41.7				
Change Period (Y+Rc), s		6.0	6.0	6.0		6.0	6.0	6.0				
Max Green Setting (Gmax), s		47.0	37.0	18.0		47.0	10.0	45.0				
Max Q Clear Time (g_c+I1), s		45.7	24.4	12.6		8.1	6.2	24.3				
Green Ext Time (p_c), s		0.5	2.5	1.6		2.1	0.0	5.7				

Intersection Summary	
HCM 7th Control Delay, s/veh	41.1
HCM 7th LOS	D

Appendix C HDOT Traffic Count Station Worksheets

Traffic Data Service

Traffic Station Sketch

N

Island: Oahu
Area: Mililani

Section ID/Station: B72701300172

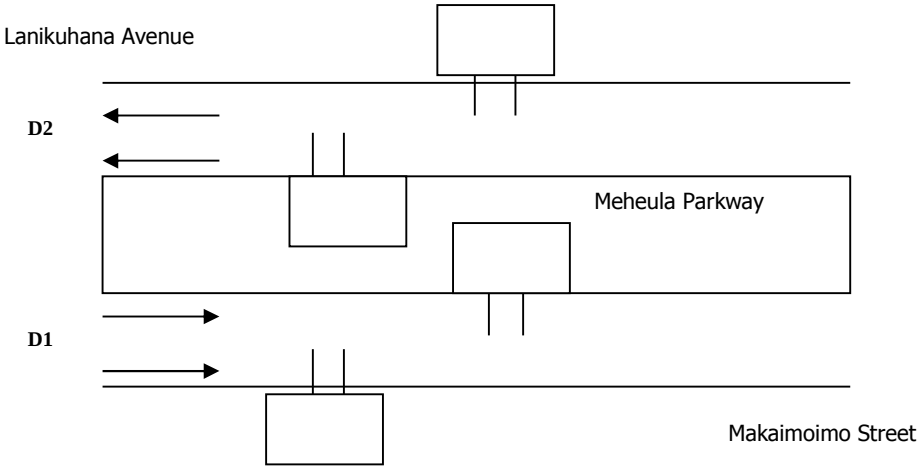

	Meter #	File Name	GPS
1.	v246	D0408005_B72701300172	21.45421, -158.0077
2.	s137	D0408006_B72701300172	21.45421, -158.0077
3.	s006		21.45421, -158.0077
4.	w593		21.45421, -158.0077

Station Description: Meheula Parkway: Lanikuhana Avenue to Makaimoimo Street					
Survey Beginning Date/Time: 4/8/15 @ 0000			Survey Ending Date/Time: 4/9/15 @ 2400		
Survey Method:	Road Tube		Data Type:	Class	
Survey Crew:	LM			C4	
Sketch Updated:			By:	SR	
Remarks:	1381				
FACILITY NAME	JURI	FUNC CLASS	AREA TYPE	ROUTE NO.	MILE
Meheula Parkway		16		7013	
D1= Direction to End D2= Direction to Begin			D1: Makaimoimo Street / Lanikuhana Avenue D2: Lanikuhana Avenue / Kaapeha Street		

Run Date:

Hawaii Department of Transportation

Site ID: B72701300172 **Town:** Oahu **Final AADT:** 12500
Functional Class: URBAN:MINOR ARTERIAL **Count Type:** CLASS **Counter Type:** Tube **Route No:** 7013
Location: Meheula Pkwy - Lanikuhana Ave to Makaimoimo St

TIME-AM	DIR 1	DIR 2	TOTAL	TIME-AM	DIR 1	DIR 2	TOTAL	TIME-PM	DIR 1	DIR 2	TOTAL	TIME-PM	DIR 1	DIR 2	TOTAL
DATE : 04/08/2015															
12:00-12:15	10	8	18	06:00-06:15	36	70	106	12:00-12:15	94	110	204	06:00-06:15	121	111	232
12:15-12:30	7	9	16	06:15-06:30	49	75	124	12:15-12:30	92	91	183	06:15-06:30	132	83	215
12:30-12:45	8	4	12	06:30-06:45	51	68	119	12:30-12:45	85	91	176	06:30-06:45	100	106	206
12:45-01:00	12	4	16	06:45-07:00	70	76	146	12:45-01:00	103	85	188	06:45-07:00	129	102	231
01:00-01:15	9	9	18	07:00-07:15	105	104	209	01:00-01:15	110	91	201	07:00-07:15	123	96	219
01:15-01:30	10	6	16	07:15-07:30	180	127	307	01:15-01:30	111	80	191	07:15-07:30	109	112	221
01:30-01:45	13	2	15	07:30-07:45	205	153	358	01:30-01:45	101	79	180	07:30-07:45	87	91	178
01:45-02:00	5	5	10	07:45-08:00	180	171	351	01:45-02:00	92	87	179	07:45-08:00	83	78	161
02:00-02:15	5	2	7	08:00-08:15	120	86	206	02:00-02:15	112	99	211	08:00-08:15	90	93	183
02:15-02:30	4	5	9	08:15-08:30	58	72	130	02:15-02:30	200	78	278	08:15-08:30	77	69	146
02:30-02:45	4	3	7	08:30-08:45	70	71	141	02:30-02:45	187	130	317	08:30-08:45	77	79	156
02:45-03:00	4	1	5	08:45-09:00	78	75	153	02:45-03:00	195	142	337	08:45-09:00	49	82	131
03:00-03:15	2	5	7	09:00-09:15	78	71	149	03:00-03:15	113	142	255	09:00-09:15	65	63	128
03:15-03:30	3	4	7	09:15-09:30	68	61	129	03:15-03:30	137	126	263	09:15-09:30	56	53	109
03:30-03:45	4	3	7	09:30-09:45	60	62	122	03:30-03:45	130	99	229	09:30-09:45	40	49	89
03:45-04:00	4	12	16	09:45-10:00	68	61	129	03:45-04:00	127	109	236	09:45-10:00	48	50	98
04:00-04:15	7	9	16	10:00-10:15	80	63	143	04:00-04:15	122	108	230	10:00-10:15	44	34	78
04:15-04:30	7	10	17	10:15-10:30	82	75	157	04:15-04:30	155	120	275	10:15-10:30	43	22	65
04:30-04:45	5	18	23	10:30-10:45	84	63	147	04:30-04:45	153	124	277	10:30-10:45	33	33	66
04:45-05:00	10	20	30	10:45-11:00	87	75	162	04:45-05:00	152	128	280	10:45-11:00	34	18	52
05:00-05:15	14	31	45	11:00-11:15	90	81	171	05:00-05:15	153	104	257	11:00-11:15	21	16	37
05:15-05:30	18	56	74	11:15-11:30	77	78	155	05:15-05:30	130	114	244	11:15-11:30	18	18	36
05:30-05:45	18	43	61	11:30-11:45	97	76	173	05:30-05:45	141	107	248	11:30-11:45	21	14	35
05:45-06:00	25	69	94	11:45-12:00	96	81	177	05:45-06:00	139	102	241	11:45-12:00	21	4	25

AM COMMUTER PERIOD (05:00-09:00)	DIR 1	DIR 2	
TWO DIRECTIONAL PEAK			
AM - PEAK HR TIME	07:00 AM to 08:00 AM		
AM - PEAK HR VOLUME	670	555	1225
AM - K FACTOR (%)			9.08
AM - D (%)	54.69	45.31	100.00
DIRECTIONAL PEAK			
AM - PEAK HR TIME	07:15 AM to 08:15 AM	07:00 AM to 08:00 AM	
AM - PEAK HR VOLUME	685	555	

PM COMMUTER PERIOD (15:00-19:00)	DIR 1	DIR 2	
TWO DIRECTIONAL PEAK			
PM - PEAK HR TIME	04:15 PM to 05:15 PM		
PM - PEAK HR VOLUME	613	476	1089
PM - K FACTOR (%)			8.07
PM - D (%)	56.29	43.71	100.00
DIRECTIONAL PEAK			
PM - PEAK HR TIME	04:15 PM to 05:15 PM	04:00 PM to 05:00 PM	
PM - PEAK HR VOLUME	613	480	

TWO DIRECTIONAL PEAK			
AM - PEAK HR TIME	07:00 AM to 08:00 AM		
AM - PEAK HR VOLUME	670	555	1225
AM - K FACTOR (%)			9.08
AM - D (%)	54.69	45.31	100.00

PM PERIOD (12:00-24:00)			
TWO DIRECTIONAL PEAK			
PM - PEAK HR TIME	02:15 PM to 03:15 PM		
PM - PEAK HR VOLUME	695	492	1187
PM - K FACTOR (%)			8.80
PM - D (%)	58.55	41.45	100.00

NON-COMMUTER PERIOD (09:00-15:00)			
TWO DIRECTIONAL PEAK			
PEAK HR TIME			
PEAK HR VOLUME	694		
DIRECTIONAL PEAK			
PEAK HR TIME	02:00 PM to 03:00 PM	02:00 PM to 03:00 PM	
PEAK HR VOLUME	694	449	

6-HR, 12-HR, 24-HR PERIODS	DIR 1	DIR 2	Total
AM 6-HR PERIOD (06:00-12:00)	2,169	1,995	4,164
AM 12-HR PERIOD (00:00-12:00)	2,377	2,333	4,710
PM 6-HR PERIOD (12:00-18:00)	3,134	2,546	5,680
PM 12-HR PERIOD (12:00-24:00)	4,755	4,022	8,777
24 HOUR PERIOD	7,132	6,355	13,487
D (%)	52.88	47.12	100.00

Run Date:

Hawaii Department of Transportation

Site ID: B72701300172 **Town:** Oahu **Final AADT:** 12500
Functional Class: URBAN:MINOR ARTERIAL **Count Type:** CLASS **Counter Type:** Tube **Route No:** 7013
Location: Meheula Pkwy - Lanikuhana Ave to Makaimoimo St

TIME-AM	DIR 1	DIR 2	TOTAL	TIME-AM	DIR 1	DIR 2	TOTAL	TIME-PM	DIR 1	DIR 2	TOTAL	TIME-PM	DIR 1	DIR 2	TOTAL
DATE : 04/09/2015															
12:00-12:15	7	7	14	06:00-06:15	33	66	99	12:00-12:15	91	93	184	06:00-06:15	127	92	219
12:15-12:30	14	7	21	06:15-06:30	46	76	122	12:15-12:30	84	86	170	06:15-06:30	123	107	230
12:30-12:45	17	10	27	06:30-06:45	57	84	141	12:30-12:45	83	102	185	06:30-06:45	119	112	231
12:45-01:00	8	7	15	06:45-07:00	74	63	137	12:45-01:00	80	70	150	06:45-07:00	128	113	241
01:00-01:15	12	2	14	07:00-07:15	104	101	205	01:00-01:15	99	89	188	07:00-07:15	109	114	223
01:15-01:30	5	4	9	07:15-07:30	178	150	328	01:15-01:30	132	97	229	07:15-07:30	95	102	197
01:30-01:45	6	2	8	07:30-07:45	212	165	377	01:30-01:45	145	159	304	07:30-07:45	82	108	190
01:45-02:00	4	1	5	07:45-08:00	158	170	328	01:45-02:00	115	161	276	07:45-08:00	106	101	207
02:00-02:15	5	6	11	08:00-08:15	106	109	215	02:00-02:15	125	126	251	08:00-08:15	69	62	131
02:15-02:30	7	2	9	08:15-08:30	60	78	138	02:15-02:30	131	111	242	08:15-08:30	62	64	126
02:30-02:45	7	2	9	08:30-08:45	67	58	125	02:30-02:45	146	108	254	08:30-08:45	66	68	134
02:45-03:00	1	4	5	08:45-09:00	70	66	136	02:45-03:00	134	122	256	08:45-09:00	59	59	118
03:00-03:15	5	4	9	09:00-09:15	66	75	141	03:00-03:15	118	123	241	09:00-09:15	72	71	143
03:15-03:30	3	4	7	09:15-09:30	60	82	142	03:15-03:30	127	126	253	09:15-09:30	72	85	157
03:30-03:45	6	8	14	09:30-09:45	76	63	139	03:30-03:45	135	102	237	09:30-09:45	49	57	106
03:45-04:00	6	11	17	09:45-10:00	78	73	151	03:45-04:00	111	125	236	09:45-10:00	50	27	77
04:00-04:15	7	7	14	10:00-10:15	80	76	156	04:00-04:15	133	97	230	10:00-10:15	52	32	84
04:15-04:30	3	16	19	10:15-10:30	97	77	174	04:15-04:30	156	128	284	10:15-10:30	37	31	68
04:30-04:45	6	18	24	10:30-10:45	83	68	151	04:30-04:45	139	112	251	10:30-10:45	48	30	78
04:45-05:00	9	27	36	10:45-11:00	75	82	157	04:45-05:00	138	105	243	10:45-11:00	26	29	55
05:00-05:15	8	30	38	11:00-11:15	87	79	166	05:00-05:15	143	104	247	11:00-11:15	28	19	47
05:15-05:30	14	55	69	11:15-11:30	100	69	169	05:15-05:30	145	110	255	11:15-11:30	24	10	34
05:30-05:45	20	60	80	11:30-11:45	92	80	172	05:30-05:45	125	101	226	11:30-11:45	25	12	37
05:45-06:00	35	67	102	11:45-12:00	93	85	178	05:45-06:00	104	97	201	11:45-12:00	18	14	32

AM COMMUTER PERIOD (05:00-09:00)	DIR 1	DIR 2	
TWO DIRECTIONAL PEAK			
AM - PEAK HR TIME			
AM - PEAK HR VOLUME	654	594	1248
AM - K FACTOR (%)			9.19
AM - D (%)	52.40	47.60	100.00
DIRECTIONAL PEAK			
AM - PEAK HR TIME	07:15 AM to 08:15 AM	07:15 AM to 08:15 AM	
AM - PEAK HR VOLUME	654	594	

PM COMMUTER PERIOD (15:00-19:00)	DIR 1	DIR 2
TWO DIRECTIONAL PEAK		
PM - PEAK HR TIME		
PM - PEAK HR VOLUME	576	449
PM - K FACTOR (%)		
PM - D (%)	56.20	43.80
DIRECTIONAL PEAK		
PM - PEAK HR TIME	04:15 PM to 05:15 PM	03:00 PM to 04:00 PM
PM - PEAK HR VOLUME	576	476

TWO DIRECTIONAL PEAK			
AM - PEAK HR TIME			
AM - PEAK HR VOLUME	654	594	
AM - K FACTOR (%)			9.19
AM - D (%)	52.40	47.60	

PM PERIOD (12:00-24:00)		
TWO DIRECTIONAL PEAK		
PM - PEAK HR TIME		
PM - PEAK HR VOLUME	516	557
PM - K FACTOR (%)		
PM - D (%)	48.09	51.91

TWO DIRECTIONAL PEAK	
PEAK HR TIME	
PEAK HR VOLUME	516
DIRECTIONAL PEAK	
PEAK HR TIME	02:00 PM to 03:00 PM
PEAK HR VOLUME	536

6-HR, 12-HR, 24-HR PERIODS	DIR 1	DIR 2	Total
AM 6-HR PERIOD (06:00-12:00)	2,152	2,095	4,247
AM 12-HR PERIOD (00:00-12:00)	2,367	2,456	4,823
PM 6-HR PERIOD (12:00-18:00)	2,939	2,654	5,593
PM 12-HR PERIOD (12:00-24:00)	4,585	4,173	8,758
24 HOUR PERIOD	6,952	6,629	13,581
D (%)	51.19	48.81	100.00

Run Date: 2016/06/17

Hawaii Department of Transportation
Highways Division
Highways Planning Survey Section

Vehicle Classification Data Summary
2015

Site ID: B72701300172 **Route No:** 7013 **Date From:** 2015/04/08 0:00
Town: Oahu **Direction:** +MP **Date To:** 2015/04/09 23:45
Location: Meheula Pkwy - Lanikuhana Ave to Makaimoimo St

Functional Classification: 16 URBAN:MINOR ARTERIAL

REPORT TOTALS - 48 HOURS RECORDED

	VOLUME	%	NUMBER OF AXLES
Cycles	179	0.66%	357
PC	20957	77.42%	41914
2A-4T	5271	19.47%	10542
LIGHT VEHICLE TOTALS	26407	97.56%	52813
	HEAVY VEHICLES		
Bus	216	0.80%	540
SINGLE UNIT TRUCK			
2A-6T	55	0.20%	110
3A-SU	39	0.14%	117
4A-SU	22	0.08%	88
SINGLE-TRAILER TRUCKS			
4A-ST	59	0.22%	236
5A-ST	54	0.20%	270
6A-ST	90	0.33%	540
MULTI-TRAILER TRUCKS			
5A-MT	43	0.16%	215
6A-MT	14	0.05%	84
7A-MT	68	0.25%	476
HEAVY VEHICLE TOTALS	660	2.44%	2676
CLASSIFIED VEHICLES TOTALS	27067 (A)	100.00%	55489 (B)
UNCLASSIFIED VEHICLES TOTALS	1	0.00%	

AXLE CORRECTION FACTOR (A/C) = 0.976

ROADTUBE EQUIVALENT(B/2) = 27745 (C)

PEAK HOUR VOLUME : 1238 **2015/04/09 07:00**	**PEAK HOUR TRUCK VOLUME**	**% TOTAL PEAK HOUR VOLUME**	**24 HOUR TRUCK VOLUME**	**AADT**	**% OF AADT**	**HPMS K-FACTOR (PEAK/AADT) (ITEM 66)**
SINGLE UNIT TRUCKS (TYPE 4-7)	**12**	**(65A-1) 0.97%**	**166**	**12500**	**(65A-2) 1.33%**	**9.90%**
COMBINATION (TYPE 8-13)	**23**	**(65B-1) 1.86%**	**164**		**(65B-2) 1.31%**	**9.90%**

Traffic Data Service

Traffic Station Sketch

N

Island: Oahu

Section ID/Station: B72701300172

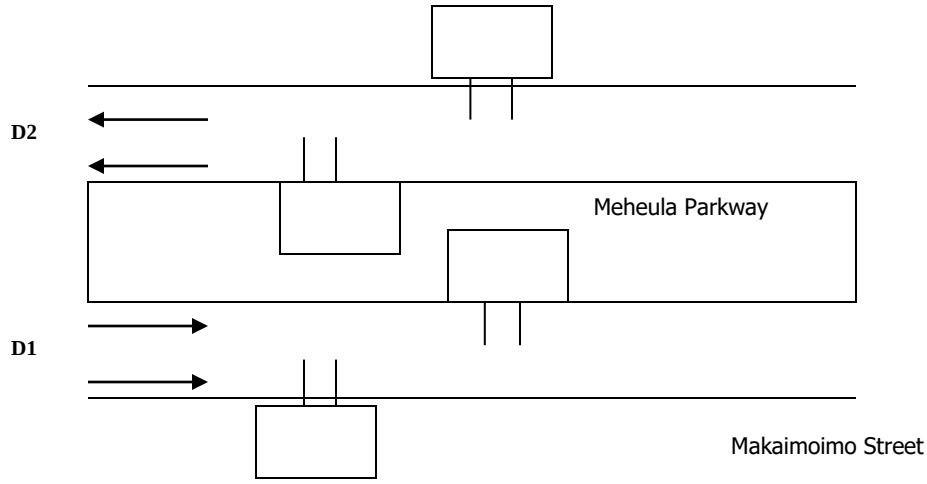

	Meter #	File Name	GPS
1.	MK59	D0815003_B72701300172	21.45312, -158.00816
2.	BZ94	D0815004_B72701300172	

Station Description: Meheula Parkway: Lanikuhana Avenue to Makaimoimo Street					
Survey Beginning Date/Time: 8/15/19 0:00			Survey Ending Date/Time: 8/16/19 0:00		
Survey Method:	Road Tube		Data Type:	Class	
Survey Crew:	LM			C4	
Sketch Updated:			By:	SR	
Remarks:	E = S 1381				
FACILITY NAME	JURI		AREA TYPE	ROUTE NO.	MILE
Meheula Parkway				7013	
D1= Direction to End D2= Direction to Begin			D1: Makaimoimo Street D2: Lanikuhana Avenue		

Run Date: 28-JUL-20

State of Hawaii, Department of Transportation, Highways Division
15 Minute Volume Report

Site ID: B72701300172
Functional Class: URBAN:MINOR ARTERIAL
Location:
Town: Oahu
Count Type: CLASS
DATE: 15-AUG-19
DIR 1: +MP
Counter Type: Tube
DIR 2: -MP
Final AADT: 12800
Route No: 7013

AM COMMUTER PERIOD (05:00-09:00)	DIR 1	DIR 2	TOTAL
TWO DIRECTIONAL PEAK			
AM - PEAK HR TIME	07:15 to 08:15 AM		
AM - PEAK HR VOLUME	665	780	1,445
AM - K FACTOR(%)			9.87
AM - D(%)	46.02	53.98	100
DIRECTIONAL PEAK			
AM - PEAK HR TIME	07:15 to 08:15 AM	07:15 to 08:15 AM	
AM - PEAK HR VOLUME	665	780	

PM COMMUTER PERIOD (15:00-19:00)	DIR 1	DIR 2	TOTAL
TWO DIRECTIONAL PEAK			
PM - PEAK HR TIME	04:30 to 05:30 PM		
PM - PEAK HR VOLUME	560	590	1,150
PM - K FACTOR(%)			7.85
PM -D(%)	48.7	51.3	100
DIRECTIONAL PEAK			
PM - PEAK HR TIME	04:30 to 05:30 PM	04:15 to 05:15 PM	
PM - PEAK HR VOLUME	560	598	

AM PERIOD (00:00-12:00)	DIR 1	DIR 2	TOTAL
TWO DIRECTIONAL PEAK			
AM - PEAK HR TIME	07:15 to 08:15 AM		
AM - PEAK HR VOLUME	665	780	1,445
AM - K FACTOR(%)			9.87
AM - D(%)	46.02	53.98	100

PM PERIOD (12:00-24:00)	DIR 1	DIR 2	TOTAL
TWO DIRECTIONAL PEAK			
PM - PEAK HR TIME	02:15 to 03:15 PM		
PM - PEAK HR VOLUME	607	641	1,248
PM - K FACTOR(%)			8.52
PM -D(%)	48.7	51.3	100

NON COMMUTER PERIOD (09:00-15:00)	DIR 1	DIR 2	TOTAL
TWO DIRECTIONAL PEAK			
PEAK HR TIME	02:15 to 03:15 PM		
PEAK HR VOLUME	607	641	1,248
DIRECTIONAL PEAK			
PEAK HR TIME	02:15 to 03:15 PM	02:00 to 03:00 PM	
PEAK HR VOLUME	607	641	

6-HR, 12-HR, 24-HR PERIODS	DIR 1	DIR 2	TOTAL
AM 6-HR PERIOD (06:00-12:00)	2,103	2,559	4,662
AM 12-HR PERIOD (00:00-12:00)	2,298	2,953	5,251
PM 6-HR PERIOD (12:00-18:00)	2,737	3,094	5,831
PM 12-HR PERIOD (12:00-24:00)	4,283	5,107	9,390
24-HR PERIOD (12:00-24:00)	6,581	8,060	14,641
D%	44.95	55.05	100

TIME - AM	DIR1	DIR 2	TOTAL
12:00 - 12:15	7	11	18
12:15 - 12:30	11	8	19
12:30 - 12:45	15	10	25
12:45 - 01:00	5	9	14
01:00 - 01:15	5	2	7
01:15 - 01:30	5	12	17
01:30 - 01:45	8	3	11
01:45 - 02:00	9	5	14
02:00 - 02:15	5	4	9
02:15 - 02:30	4	3	7
02:30 - 02:45	0	3	3
02:45 - 03:00	7	6	13
03:00 - 03:15	3	3	6
03:15 - 03:30	3	9	12
03:30 - 03:45	4	5	9
03:45 - 04:00	7	7	14
04:00 - 04:15	3	6	9
04:15 - 04:30	6	17	23
04:30 - 04:45	9	20	29
04:45 - 05:00	11	23	34
05:00 - 05:15	18	40	58
05:15 - 05:30	13	45	58
05:30 - 05:45	14	64	78
05:45 - 06:00	23	79	102

TIME - AM	DIR1	DIR 2	TOTAL
06:00 - 06:15	45	67	112
06:15 - 06:30	50	100	150
06:30 - 06:45	46	76	122
06:45 - 07:00	79	104	183
07:00 - 07:15	98	132	230
07:15 - 07:30	142	188	330
07:30 - 07:45	196	212	408
07:45 - 08:00	198	240	438
08:00 - 08:15	129	140	269
08:15 - 08:30	75	87	162
08:30 - 08:45	68	82	150
08:45 - 09:00	65	84	149
09:00 - 09:15	64	92	156
09:15 - 09:30	60	88	148
09:30 - 09:45	63	80	143
09:45 - 10:00	63	78	141
10:00 - 10:15	72	79	151
10:15 - 10:30	76	83	159
10:30 - 10:45	69	81	150
10:45 - 11:00	86	92	178
11:00 - 11:15	97	100	197
11:15 - 11:30	74	88	162
11:30 - 11:45	94	92	186
11:45 - 12:00	94	94	188

TIME - PM	DIR1	DIR 2	TOTAL
12:00 - 12:15	100	99	199
12:15 - 12:30	82	99	181
12:30 - 12:45	77	102	179
12:45 - 01:00	84	100	184
01:00 - 01:15	55	92	147
01:15 - 01:30	63	99	162
01:30 - 01:45	78	99	177
01:45 - 02:00	78	99	177
02:00 - 02:15	113	136	249
02:15 - 02:30	155	180	335
02:30 - 02:45	132	170	302
02:45 - 03:00	138	155	293
03:00 - 03:15	182	136	318
03:15 - 03:30	105	142	247
03:30 - 03:45	110	133	243
03:45 - 04:00	115	126	241
04:00 - 04:15	137	132	269
04:15 - 04:30	118	126	244
04:30 - 04:45	141	147	288
04:45 - 05:00	144	154	298
05:00 - 05:15	133	171	304
05:15 - 05:30	142	118	260
05:30 - 05:45	125	144	269
05:45 - 06:00	130	135	265

TIME - PM	DIR1	DIR 2	TOTAL
06:00 - 06:15	110	140	250
06:15 - 06:30	98	123	221
06:30 - 06:45	144	143	287
06:45 - 07:00	116	132	248
07:00 - 07:15	113	103	216
07:15 - 07:30	98	137	235
07:30 - 07:45	90	143	233
07:45 - 08:00	87	115	202
08:00 - 08:15	74	128	202
08:15 - 08:30	81	94	175
08:30 - 08:45	71	104	175
08:45 - 09:00	56	125	181
09:00 - 09:15	53	95	148
09:15 - 09:30	46	77	123
09:30 - 09:45	50	59	109
09:45 - 10:00	42	54	96
10:00 - 10:15	41	51	92
10:15 - 10:30	35	33	68
10:30 - 10:45	19	33	52
10:45 - 11:00	33	30	63
11:00 - 11:15	28	22	50
11:15 - 11:30	22	33	55
11:30 - 11:45	22	23	45
11:45 - 12:00	17	16	33

Run Date: 28-JUL-20

State of Hawaii, Department of Transportation, Highways Division
15 Minute Volume Report

Site ID: B72701300172
Functional Class: URBAN:MINOR ARTERIAL
Location:

Town: Oahu
Count Type: CLASS
DATE: 16-AUG-19

DIR 1: +MP
Counter Type: Tube

DIR 2: -MP

Final AADT: 12800
Route No: 7013

AM COMMUTER PERIOD (05:00-09:00)	DIR 1	DIR 2	TOTAL
TWO DIRECTIONAL PEAK			
AM - PEAK HR TIME	08:45 to 09:45 AM		
AM - PEAK HR VOLUME	280	333	613
AM - K FACTOR(%)			4.5
AM - D(%)	45.68	54.32	100
DIRECTIONAL PEAK			
AM - PEAK HR TIME	08:45 to 09:45 AM	08:45 to 09:45 AM	
AM - PEAK HR VOLUME	280	333	

PM COMMUTER PERIOD (15:00-19:00)	DIR 1	DIR 2	TOTAL
TWO DIRECTIONAL PEAK			
PM - PEAK HR TIME	05:00 to 06:00 PM		
PM - PEAK HR VOLUME	572	520	1,092
PM - K FACTOR(%)			8.02
PM -D(%)	52.38	47.62	100
DIRECTIONAL PEAK			
PM - PEAK HR TIME	05:00 to 06:00 PM	04:15 to 05:15 PM	
PM - PEAK HR VOLUME	572	549	

AM PERIOD (00:00-12:00)	DIR 1	DIR 2	TOTAL
TWO DIRECTIONAL PEAK			
AM - PEAK HR TIME	11:45 to 12:45 PM		
AM - PEAK HR VOLUME	406	411	817
AM - K FACTOR(%)			6
AM - D(%)	45.68	54.32	100

PM PERIOD (12:00-24:00)	DIR 1	DIR 2	TOTAL
TWO DIRECTIONAL PEAK			
PM - PEAK HR TIME	05:00 to 06:00 PM		
PM - PEAK HR VOLUME	572	520	1,092
PM - K FACTOR(%)			8.02
PM -D(%)	52.38	47.62	100

NON COMMUTER PERIOD (09:00-15:00)	DIR 1	DIR 2	TOTAL
TWO DIRECTIONAL PEAK			
PEAK HR TIME	01:15 to 02:15 PM		
PEAK HR VOLUME	425	451	876
DIRECTIONAL PEAK			
PEAK HR TIME	01:15 to 02:15 PM	01:30 to 02:30 PM	
PEAK HR VOLUME	425	452	

6-HR, 12-HR, 24-HR PERIODS	DIR 1	DIR 2	TOTAL
AM 6-HR PERIOD (06:00-12:00)	1,572	1,886	3,458
AM 12-HR PERIOD (00:00-12:00)	1,773	2,252	4,025
PM 6-HR PERIOD (12:00-18:00)	2,655	2,754	5,409
PM 12-HR PERIOD (12:00-24:00)	4,502	5,087	9,589
24-HR PERIOD (12:00-24:00)	6,275	7,339	13,614
D%	46.09	53.91	100

TIME - AM	DIR1	DIR 2	TOTAL
12:00 - 12:15	12	20	32
12:15 - 12:30	15	20	35
12:30 - 12:45	10	10	20
12:45 - 01:00	13	9	22
01:00 - 01:15	7	12	19
01:15 - 01:30	14	8	22
01:30 - 01:45	6	12	18
01:45 - 02:00	3	9	12
02:00 - 02:15	8	8	16
02:15 - 02:30	7	8	15
02:30 - 02:45	6	5	11
02:45 - 03:00	3	8	11
03:00 - 03:15	2	3	5
03:15 - 03:30	3	13	16
03:30 - 03:45	3	3	6
03:45 - 04:00	2	8	10
04:00 - 04:15	8	7	15
04:15 - 04:30	7	8	15
04:30 - 04:45	8	14	22
04:45 - 05:00	9	26	35
05:00 - 05:15	13	25	38
05:15 - 05:30	6	39	45
05:30 - 05:45	18	38	56
05:45 - 06:00	18	53	71

TIME - AM	DIR1	DIR 2	TOTAL
06:00 - 06:15	31	58	89
06:15 - 06:30	24	56	80
06:30 - 06:45	33	45	78
06:45 - 07:00	37	60	97
07:00 - 07:15	36	54	90
07:15 - 07:30	50	63	113
07:30 - 07:45	55	81	136
07:45 - 08:00	53	65	118
08:00 - 08:15	49	77	126
08:15 - 08:30	57	68	125
08:30 - 08:45	59	61	120
08:45 - 09:00	61	72	133
09:00 - 09:15	63	84	147
09:15 - 09:30	78	97	175
09:30 - 09:45	78	80	158
09:45 - 10:00	78	110	188
10:00 - 10:15	83	88	171
10:15 - 10:30	80	92	172
10:30 - 10:45	90	92	182
10:45 - 11:00	103	94	197
11:00 - 11:15	85	101	186
11:15 - 11:30	91	102	193
11:30 - 11:45	93	90	183
11:45 - 12:00	105	96	201

TIME - PM	DIR1	DIR 2	TOTAL
12:00 - 12:15	125	104	229
12:15 - 12:30	78	112	190
12:30 - 12:45	98	99	197
12:45 - 01:00	78	117	195
01:00 - 01:15	91	90	181
01:15 - 01:30	112	106	218
01:30 - 01:45	110	114	224
01:45 - 02:00	88	114	202
02:00 - 02:15	115	117	232
02:15 - 02:30	85	107	192
02:30 - 02:45	87	104	191
02:45 - 03:00	92	107	199
03:00 - 03:15	104	105	209
03:15 - 03:30	108	94	202
03:30 - 03:45	91	112	203
03:45 - 04:00	111	117	228
04:00 - 04:15	137	98	235
04:15 - 04:30	110	146	256
04:30 - 04:45	129	130	259
04:45 - 05:00	134	141	275
05:00 - 05:15	126	132	258
05:15 - 05:30	139	137	276
05:30 - 05:45	153	129	282
05:45 - 06:00	154	122	276

TIME - PM	DIR1	DIR 2	TOTAL
06:00 - 06:15	117	140	257
06:15 - 06:30	121	120	241
06:30 - 06:45	133	122	255
06:45 - 07:00	132	111	243
07:00 - 07:15	139	105	244
07:15 - 07:30	115	134	249
07:30 - 07:45	96	127	223
07:45 - 08:00	74	112	186
08:00 - 08:15	78	88	166
08:15 - 08:30	85	65	150
08:30 - 08:45	66	101	167
08:45 - 09:00	59	95	154
09:00 - 09:15	70	91	161
09:15 - 09:30	62	110	172
09:30 - 09:45	63	106	169
09:45 - 10:00	50	88	138
10:00 - 10:15	66	93	159
10:15 - 10:30	64	93	157
10:30 - 10:45	67	98	165
10:45 - 11:00	66	123	189
11:00 - 11:15	58	106	164
11:15 - 11:30	27	39	66
11:30 - 11:45	21	40	61
11:45 - 12:00	18	26	44

(This page intentionally left blank.)

Appendix I

Acoustic Study

(This page intentionally left blank.)

MILILANI HIGH SCHOOL TEACHER WORKFORCE HOUSING PROJECT

Acoustic Study

Prepared for:

Pacific Housing Assistance Corporation

November 2025

taha
environmental planners

TABLE OF CONTENTS

Page No.

1.0 SUMMARY OF FINDINGS 1

2.0 INTRODUCTION 2
2.1 Purpose 2
2.2 Project Description 2

3.0 NOISE CHARACTERISTICS AND REGULATIONS 5
3.1 Noise Characteristics 5
3.2 Noise Regulations 7

4.0 EXISTING SETTING 9
4.1 Noise-Sensitive Land Uses 9
4.2 Existing Noise Levels 9

5.0 METHODOLOGY AND SIGNIFICANCE CRITERIA 12
5.1 Methodology 12
5.2 Significance Criteria 12

6.0 ENVIRONMENTAL EFFECTS 14
6.1 Construction Noise 14
6.2 Operational Noise 15

7.0 CUMULATIVE EFFECTS 17

APPENDIX

LIST OF TABLES

Table 3-1 Maximum Permissible Sound Levels 8
Table 4-1 Noise Sensitive Receptors within 500 Feet of the Project Site 9
Table 4-2 Existing Roadway Noise Levels at Nearby Land Uses 10
Table 6-1 Maximum Noise Levels of Common Construction Machines 14
Table 6-2 Future 2030 Noise Levels on the Roadway Network 15

LIST OF FIGURES

Figure 2-1 Project Location 3
Figure 2-2 Site Plan 4
Figure 3-1 A-Weighted Decibel Scale 6
Figure 4-1 Sensitive Receptors 11

1.0 SUMMARY OF FINDINGS

Terry A. Hayes Associates Inc. (TAHA) has completed an Acoustic Study for the Mililani High School Teacher Workforce Housing Project (proposed project). Key findings are listed below.

- Construction activity would result in temporary increases in ambient noise levels in the project area on an intermittent basis. Construction noise levels would not exceed the Hawaii State Department of Health (DOH) *Noise Reference Manual Oahu Edition* maximum noise level of 78 A-weighted decibels (dBA). The proposed project would not result in an adverse effect related to construction noise.

- A detailed land use compatibility analysis, including roadway and aircraft sources, was completed to assess noise levels at the project site using the United States Department of Housing and Urban Development (HUD) guidelines. The analysis shows that new residents would not be exposed to excessive noise levels. The exterior noise level was estimated to be approximately 68 dBA Day-Night Noise Level (L_{dn}) along Meheula Parkway. This would exceed the HUD exterior noise standard of 65 dBA L_{dn} for the construction of new housing. According to HUD guidance, a project located in an area that exceeds the 65 dBA L_{dn} must demonstrate that interior noise levels would not exceed 45 dBA L_{dn} within the new housing. The HUD guidance states that the materials used with new construction typically provide at least 26 dBA exterior-to-interior noise reduction. This is provided that a ventilation system is installed such that windows may be closed. Assuming a fresh air supply system is installed with the new construction, predicted interior noise levels at the new residence would be approximately 42 dBA L_{dn}. This would be less than the 45 dBA L_{dn} standard recommended by HUD and residents would not be exposed to excessive 24-hour noise.

- The potential for the proposed project to expose adjacent land uses to excessive noise levels was assessed using the Hawaii Administrative Rules and other industry standards. Stationary noise sources would not exceed the maximum permissible noise levels. In addition, traffic generated by the proposed project would not significantly increase existing roadway noise levels. The proposed project would not result in adverse effects related to typical sources of residential noise, including new traffic.

2.0 INTRODUCTION

2.1 PURPOSE

The purpose of this report is to evaluate the potential for acoustic impacts associated with the proposed project. Potential noise levels are analyzed for construction and operational activities. Noise control measures for potentially adverse effects are recommended when appropriate to reduce community noise exposure.

2.2 PROJECT DESCRIPTION

The proposed project includes the construction of teacher workforce multi-family housing located at Mililani High School. Ninety-four one- and two-bedroom units would be constructed to offer a range of affordability and living options. One unit will be reserved for a resident manager, and the proposed project would provide secure, on-site parking. Amenities may include:

- A fitness center,
- Collaboration spaces for social gatherings and educational workshops,
- A teacher resource room with supplies to help teachers plan classroom activities,
- On-site laundry facilities,
- Green spaces for relaxation and recreation,
- Storage lockers and bicycle and surfboard racks, and
- A dog park.

Figure 2-1 illustrates the location of the project site. **Figure 2-2** illustrates the proposed site plan.

Source: PBR Hawaii & Associates, Inc., 2025.

Project Location

Figure 2-1

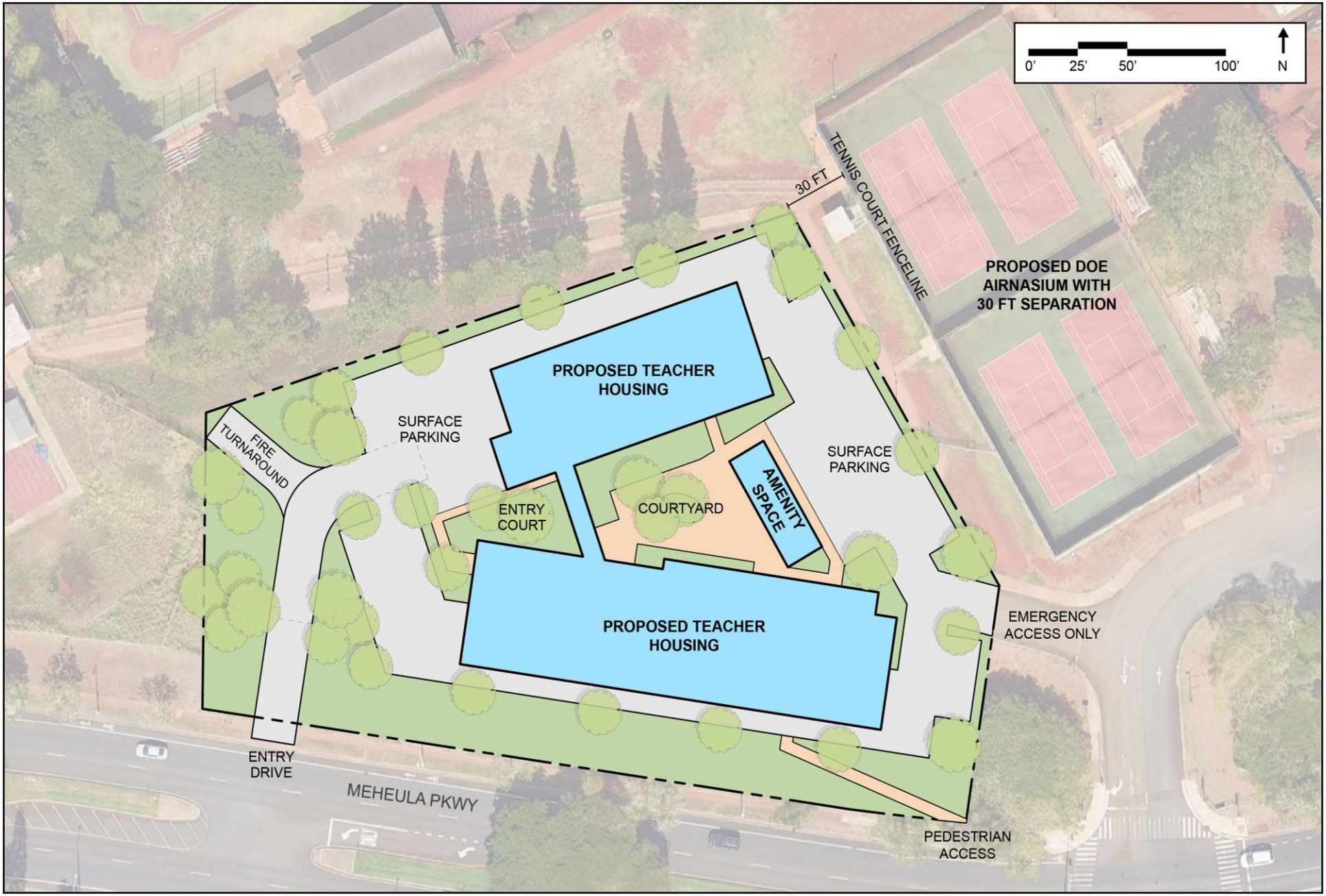

Source: WRNS Studio, 2026.

Site Plan
Figure 2-2

3.0 NOISE CHARACTERISTICS AND REGULATIONS

The Hawaii State DOH *Noise Reference Manual (Oahu Edition)* discusses noise as a public health issue.[1] The *Manual* states that the quality of the environment is a major concern of the general population. The effects of noise have been more pervasive and more apparent as there has been an increase in ambient sound levels. In the context of protecting the public health and welfare, noise implies adverse effects on people and the environment. Noise causes hearing loss, interferes with human activities, and is in various ways injurious to health and well-being. Although hearing loss is the most clearly measurable health hazard, noise is also linked to other psychological problems. Noise annoys, awakens, angers and frustrates people. It disrupts communication and individual thoughts, and affects performance capabilities, such as communication. Noise is one of the biological stresses associated with everyday life. The numerous effects of noise combine to detract from the quality of people's lives and the environment. Noise annoyance may be viewed as any negative reaction to noise on the part of an individual or group.

3.1 NOISE CHARACTERISTICS

Noise is generally defined as unwanted sound. The degree to which noise can impact the human environment ranges from levels that interfere with speech and sleep (annoyance and nuisance) to levels that cause adverse health effects (hearing loss and psychological effects). Human response to noise is subjective and can vary greatly from person to person. Factors that influence individual response include the intensity, frequency and pattern of noise, the amount of background noise present before the intruding noise, and the nature of work or human activity that is exposed to the noise source.

Sound is technically described in terms of the loudness and frequency of the sound. The standard unit of measurement for sound is the decibel (dB). The human ear is not equally sensitive to sound at all frequencies. The "A-weighted scale," abbreviated dBA, reflects the normal hearing sensitivity range of the human ear. On this scale, the range of human hearing extends from approximately 3 to 140 dBA. Studies have shown that the smallest perceptible change in sound level for a person with normal hearing sensitivity is approximately 3 dBA. A change of at least 5 dBA would be noticeable and would likely evoke a community reaction. A 10-dBA increase is subjectively heard as a doubling in loudness and would cause a community response. **Figure 3-1** provides examples of A-weighted noise levels from common sounds.

Noise levels decrease as the distance from the noise source to the receiver increases. Noise generated by a stationary noise source, or "point source," will decrease by approximately 6 dBA over hard surfaces (e.g., reflective surfaces such as parking lots) and 7.5 dBA over soft surfaces (e.g., absorptive surfaces such as landscaping) for each doubling of the distance. For example, if a noise source produces a noise level of 89 dBA at a reference distance of 50 feet, then the noise level would be 83 dBA at a distance of 100 feet from the noise source. Noise generated by a mobile source will decrease by approximately 3 dBA over hard surfaces and 4.5 dBA over soft surfaces for each doubling of the distance.

[1]Hawaii State DOH, *Noise Reference Manual (Oahu Edition)*, July 2017.

Common Outdoor Activities	Noise Level (dBA)	Common Indoor Activities
	110	Rock band
Jet flyover at 1,000 feet		
	100	
Gas lawnmower at 3 feet		
	90	
Diesel truck at 50 feet at 50 mph		Food blender at 3 feet
	80	Garbage disposal at 3 feet
Noisy urban area, daytime		
Gas lawnmower, 100 feet	**70**	Vacuum cleaner at 10 feet
Commercial area		Normal speech at 3 feet
Heavy traffic at 300 feet	**60**	
		Large business office
Quiet urban daytime	**50**	Dishwasher in next room
Quiet urban nighttime	**40**	Theater, large conference room (background)
Quiet suburban nighttime		
	30	Library
Quiet rural nighttime		Bedroom at night, concert hall (background)
	20	
		Broadcast/recording studio
	10	
	0	

Source: California Department of Transportation, Technical Noise Supplement to the Traffic Noise Analysis Protocol, September 2013.

A-Weighted Decibel Scale
Figure 3-1

Generally, noise is most audible when traveling by direct line-of-sight (unobstructed visual path between the noise source and the noise receptor). Barriers, such as walls, berms, or buildings that break the line-of-sight between the source and the receiver greatly reduce noise levels from the source since sound can only reach the receiver by bending over the top of the barrier (diffraction). However, if a barrier is not high or long enough to break the line-of-sight from the source to the receiver, its effectiveness is greatly reduced.

This noise analysis discusses sound levels in terms of Equivalent Noise Level (L_{eq}) and L_{dn}. L_{eq} is the average noise level on an energy basis for any specific time period. The L_{eq} for one hour is the energy average noise level during the hour. The average noise level is based on the energy content (acoustic energy) of the sound. L_{eq} can be thought of as the level of a continuous noise which has the same energy content as the fluctuating noise level. The equivalent noise level is expressed in units of dBA. L_{dn} is a 24-hour L_{eq} with an adjustment to reflect the greater sensitivity of most people to nighttime noise. The adjustment is a 10-dBA increase in noise level for all sound that occurs in the nighttime hours of 10:00 p.m. to 7:00 a.m. The effect of the penalty is that, in the calculation of L_{dn}, any event that occurs during the nighttime hours is equivalent to ten of the same event during the daytime hours.

3.2 NOISE REGULATIONS

Federal. HUD has a stated goal to provide "a decent home and suitable living environment for every American family." In order to facilitate the creation of suitable living environments, HUD has developed a standard for noise criteria. The basic foundation of the HUD noise program is set out in the noise regulation 24 Code of Federal Regulations (CFR) 51B. The regulations establish exterior noise standards for new housing construction assisted or supported by HUD. The regulations state that acceptable exterior noise levels are 65 L_{dn} or less, normally unacceptable exterior noise levels are between 65 and 75 L_{dn} (to achieve an acceptable status, appropriate sound attenuation measures must be provided), and unacceptable noise levels exceed 75 L_{dn}. HUD's regulations do not contain standards for interior noise levels. Rather, a goal of 45 dBA L_{dn} is set forth and the attenuation requirements are geared towards achieving that goal. It is assumed that with standard construction, any building will provide sufficient attenuation so that if the exterior level is 65 L_{dn} or less, then the interior level will be 45 L_{dn} or less. HUD offers three suggestions for mitigating high noise levels on residential projects, including relocation, erecting barriers, and using noise control designs on the building's exterior.

The Federal Aviation Administration (FAA) published Order 1050.1G *Environmental Impacts: Policies and Procedures*, which states, "The compatibility of existing and planned land uses with proposed aviation actions is usually determined in relation to the level of aircraft noise." Federal compatible land use guidelines for a variety of land uses are provided in the *Noise and Noise-Compatible Land Use Chapter of the 1050.1 Desk Reference*.[2] The guidelines indicate that residential land uses exposed to aircraft-related noise levels of less than 65 dBA L_{dn} are compatible with the ambient noise environment.

State. The State Legislature passed Act 147 in 1970, which authorized the DOH to control excessive noise in Hawaii. This act allowed the DOH to promulgate rules for each county to control all sources of noise. In 1972, Act 100, the Environmental Quality Act, was passed by the State Legislature. This act was codified in Chapter 342, Hawaii Revised Statutes, and currently Chapter 342F. Under the provisions of the foregoing acts, the DOH adopted regulations to control

[2]FAA, 1050.1 Desk Reference, Chapter 11 - Noise and Noise-Compatible Land Use, February 2020.

vehicular noise on Oahu (repealed Chapter 11-42 effective June 28, 2000; and in 1976, adopted Chapter 11-43, Community Noise Control for Oahu).

Chapter 342F, Hawaii Revised Statues, states that the DOH shall prevent, control, and abate noise pollution in the State. The noise program proceeded with the development of Chapter 11-46, Hawaii Administrative Rules, statewide rules on Community Noise Control, which was adopted on September 23, 1996. The purpose of Chapter 11-46 is to define maximum permissible sounds levels, and to provide for the prevention, control, and abatement of noise pollution in Hawaii from stationary noise, construction and agricultural equipment, and industrial activities. The maximum permissible sound levels are shown in **Table 3-1**. Construction activity is permitted to exceed the maximum permissible sound levels as long as activity occurs between 7:00 a.m. and 6:00 p.m. Monday through Friday and between 9:00 a.m. and 6:00 p.m. on Saturdays. No construction activity which exceeds the maximum permissible sound levels is permitted on Sundays or holidays. Backup alarm devices on construction equipment that is required by federal or State occupational safety and health regulations are exempt from complying with the maximum noise levels. The Hawaii Administrative Rules also state that all construction equipment should include mufflers, except pile hammers and pneumatic hand tools. The Director of the DOH may grant a permit to operate excessive noise sources that exceed the maximum permissible noise levels. The permit application should include, but is not limited to, an assessment of best available control technology and disclosure of nighttime impacts. The proposed project is located in a Class A Zoning District.

TABLE 3-1: MAXIMUM PERMISSIBLE SOUND LEVELS

Zoning District	Daytime (dBA) (7:00 a.m. to 10:00 p.m.)	Nighttime (dBA) (10:00 p.m. to 7:00 a.m.)
Class A	55	45
Class B	60	50
Class C	70	70

Notes:
Class A: Lands zoned residential, conservation, preservation, public space, open space, or similar type.
Class B: Lands zoned for multi-family dwellings, apartment, business, commercial, hotel, resort, or similar type.
Class C: Lands zoned agriculture, country, industrial, or similar type.
The sound levels apply to any excessive noise source emanating within the specified zoning district, and at any point at or beyond the property line.
Noise levels shall not exceed the maximum permissible sound levels for more than ten percent of the time within any twenty minute period, except by permit or variance.
For mixed zoning districts, the primary land use designation shall be used to determine the applicable zoning district.
The maximum permissible sound level for impulsive noise shall be ten dBA above the maximum permissible sound levels.
SOURCE: Hawaii Administrative Rules, Title 11, Chapter 46.

The DOH *Noise Reference Manual (Oahu Edition)* discusses local rules for various noise sources.[3] Relevant information includes a discussion of construction noise. A Community Noise Permit is required for construction projects exceeding 78 dBA or that has a total cost of more than $250,000 (based on the value of the building permit). Construction is allowed from 7:00 a.m. to 6:00 p.m., Monday through Friday, and 9:00 a.m. to 6:00 p.m. on Saturdays. The use of certain demolition and construction equipment (such as pile drivers, hydraulic hammers, jackhammers, etc.) is limited to 9:00 a.m. to 5:30 p.m., Monday through Friday. Construction projects exceeding the maximum permissible sound levels (78 dBA) before 7:00 a.m. and after 6:00 p.m., Monday through Friday, or before 9:00 a.m. and after 6:00 p.m. on Saturdays, or at any time on Sundays and holidays are allowed only with an approved Community Noise Variance issued by the DOH.

[3]Hawaii State DOH, *Noise Reference Manual (Oahu Edition)*, July 2017.

4.0 EXISTING SETTING

4.1 NOISE-SENSITIVE LAND USES

Noise-sensitive land uses are locations where people reside or where the presence of unwanted sound could adversely affect the use of the land. Residences, schools, hospitals, guest lodging, libraries, and places of worship and some passive recreation areas are typically considered sensitive and may warrant unique measures for protection from intruding noise. Off-site noise-sensitive receptors within 500 feet of the project site are listed below in **Table 4-1** and shown in **Figure 4-1**. The existing Mililani High School is not considered a sensitive receptor for the impact assessment. The Pacific Housing Assistance Corporation nonprofit developer will coordinate the proposed project with the Hawaii School Facilities Authority, the Hawaii Department of Education, and the School administration staff. This coordination will ensure that the proposed workforce housing on the school site will not interfere with on-site school activities. For example, the State agencies can control the timing of construction activities on their own project site.

TABLE 4-1: NOISE SENSITIVE RECEPTORS WITHIN 500 FEET OF THE PROJECT SITE

Figure 4-1 ID	Sensitive Receptor	Distance (feet)
3	The Church of Jesus Christ of Latter Day Saints	175
4	Residences to the south along Anania Dr.	230
5	Residences to the southeast along Meheula Pkwy.	300

SOURCE: TAHA, 2025.

4.2 EXISTING NOISE LEVELS

Noise sources in the vicinity of the project site include Meheula Parkway and other local roadways, Kauinana Stadium associated with Mililani High School, and Wheeler Army Airfield located 2.5 miles to the north of the project site. The local roadways and the airfield are the primary sources of noise in the project vicinity. The stadium would only generate noise when in use, which would not be a continuous source of noise during an average day.

The project site is located approximately 1.9 miles from the Wheeler Army Airfield. Noise contour maps are not publicly available for the Wheeler Army Airfield. In order to determine if the proposed project would be within the airfield's noise contours, a review of a similar military facility was conducted. Naval Air Station Whiting Field in Florida, which is home to the largest Navy and Marine Corps air wing, prepared an Air Installation Compatible Land Use Zones Study in 2017. As part of the study, noise contours were prepared for the airfields. The noise study considered both flights by fixed-wing aircraft and rotary wing aircraft, similar to operations at Wheeler Army Airfield. From the edge of the runway, the 55 dBA L_{dn} noise contour extends approximately 2 miles and the 60 dBA contour extends approximately 0.8 miles from the center of the airfield. The proposed project is not located on the Wheeler Army Airfield runway path and is located more than 2 miles from the center of the airfield. Thus, it has been assumed that the project site would be located within a 55 dBA L_{dn} noise contour based on similar observed noise contours for other facilities.

Existing noise levels were calculated using the HUD Day/Night Noise Level (DNL) Calculator. The model calculates the Day/Night Noise Level for roadways by taking into account average vehicle

speed, distance to receptor, average daily trips, road gradient, average daily trips (ADT) by vehicle type, the percentage of ADT that occurs between the hours of 10:00 p.m. to 7:00 a.m., and airport noise levels. The existing noise level was calculated utilizing existing traffic volumes from the Traffic Study prepared for the proposed project. Calculations are shown in the **Appendix**. Existing sound levels are shown in **Table 4-2** and noise assessment locations are shown in **Figure 4-1**.

TABLE 4-2: EXISTING ROADWAY NOISE LEVELS AT NEARBY LAND USES

Figure 4-1 ID	Land Use	Noise Level (dBA, L_{dn})
1	Residences west of Kamehameha Hwy. north of Meheula Pkwy.	67
2	Residences west of Kamehameha Hwy. south of Meheula Pkwy.	65
3	The Church of Jesus Christ of Latter Day Saints	64
4	Residences to the south along Anania Dr.	64
5	Residences to the southeast along Meheula Pkwy.	66
6	Mililani Public Library	65
7	Residences north of Hookelewaa St.	71
8	Rainbow School	71

SOURCE: TAHA, 2025.

Source: TAHA, 2025.

taha environmental planners

MILILANI HIGH SCHOOL TEACHER WORKFORCE HOUSING PROJECT
ACOUSTIC STUDY

TAHA 2024-048 • PACIFIC HOUSING ASSISTANCE CORPORATION

Sensitive Receptors

Figure 4-1

5.0 METHODOLOGY AND SIGNIFICANCE CRITERIA

5.1 METHODOLOGY

The analysis considers construction and operational sources of noise. The noise level during the construction period at each receptor location was calculated by making a distance adjustment to the construction source sound level using equation (1) and logarithmically adding the adjusted construction noise source level to the ambient noise level using equation (2).

$$(1)\ L_{eq} = L_{eq}\ at\ 50\ feet - 20log(D/50)$$

Where:

L_{eq}	=	*calculated noise level, L_{eq}, at a receptor from the operation of a single loudest piece of equipment, dBA.*
L_{max} *at 50 feet*	=	*noise emission level of the construction equipment at the reference distance of 50 feet, dBA.*
D	=	*distance from the receptor to the construction equipment, feet.*

$$(2)\ L_{eq}\,total = 10log\ (\sum all\ sources\ 10^{Leq/10})$$

Where:

L_{eq} *total*	=	*Logarithmic sum of all noise sources.*

Operational noise levels were calculated based on information provided in the traffic study and stationary noise sources located on the project site (e.g., mechanical equipment). To assess future noise levels at the project site, future traffic noise was predicted using the HUD DNL Calculator and traffic volumes. The model calculates the Day/Night Noise Level for roadways by taking into account average vehicle speed, distance to receptor, average daily trips, road gradient, ADT by vehicle type, the percentage of ADT that occurs between the hours of 10:00 p.m. to 7:00 a.m., and airport noise levels. Noise assessment locations (NALs) were selected to represent noise levels that would be experienced by sensitive receptors.

5.2 SIGNIFICANCE CRITERIA

According to the Council on Environmental Quality regulations (40 CFR §§ 1500-1508), the determination of a significant impact is a function of both context and intensity. Context means that the significance of an action must be analyzed in several contexts such as society as a whole (human, national), the affected region, the affected interests, and the locality. Both short- and long-term effects are relevant. Intensity refers to the severity of impact. To determine significance, the severity of the impact must be examined in terms of the type, quality and sensitivity of the resource involved; the location of the project; the duration of the effect (short- or long-term) and other consideration of context. Adverse impacts will vary with the setting of the proposed action and the surrounding area. Specific construction and operational impact criteria are listed below.

Construction Noise Adverse Effect Criteria

The proposed project would result in an adverse construction noise effect if:

- Construction activities occur prior to 7:00 a.m. and after 6:00 p.m., Monday through Friday, or before 9:00 a.m. and after 6:00 p.m. on Saturdays, or at any time on Sundays; and/or

- Noise levels exceed the Hawaii State Department of Health *Noise Reference Manual Oahu Edition* maximum noise level of 78 dBA without first obtaining a noise variance.

Operational Noise Adverse Effect Criteria

The proposed project would result in an adverse operational noise effect if:

- Noise levels at proposed residential land uses exceed the HUD exterior noise standard 65 dBA L_{dn}. If this standard is exceeded, further study is required to demonstrate that interior noise levels would not exceed 45 dBA L_{dn};
- Mobile sources cause a 5-dBA or more noise increase along off-site roadway segments, which is considered a noticeable change in noise levels that would likely evoke a community reaction; and/or
- Stationary source noise levels exceed the maximum Hawaii Administrative Rules noise levels shown in **Table 3-1** without first obtaining a permit from the Director of the DOH.

6.0 ENVIRONMENTAL EFFECTS

6.1 CONSTRUCTION NOISE

Construction activity would result in temporary increases in ambient noise levels in the project area on an intermittent basis. Typical noise levels from various types of equipment that may be used during construction are listed in **Table 6-1**. The table shows noise levels at distances of 50 feet from the construction noise source.

TABLE 6-1: MAXIMUM NOISE LEVELS OF COMMON CONSTRUCTION MACHINES

Noise Source	Noise Level (dBA) at 50 Feet
Aerial Lifts	67.7
Air Compressors	73.7
Cement and Mortar Mixers	74.8
Compactor	76.2
Compressor	73.7
Concrete Mixer	74.8
Concrete Pump Truck	74.4
Concrete/Industrial Saws	82.6
Crane	72.6
Crawler Tractors	80.0
Drum Rollers	77.0
Dump Truck	72.5
Excavator	76.7
Flat Bed Delivery Trucks	70.3
Forklift/Gradall	79.4
Generators	77.6
Hoerams	80.0
Jack Hammer	81.9
Pavers	74.2
Rollers	73.0
Skid/Track Loader	75.1
Tractors/Loaders/Backhoes	80.0
Welder	70.0

SOURCE: Federal Highway Administration, *Roadway Construction Noise Model*, *Version 1.1*, 2008.

Project-related construction noise may contribute to an increase in community noise levels. Instead of a quantitative construction noise threshold, HUD encourages the use of quieter construction equipment and methods in population centers. Construction activity would only occur from 7:00 a.m. to 6:00 p.m., Monday through Friday and 9:00 a.m. to 6:00 p.m. on Saturdays. Construction noise levels would depend on the construction activity, type of equipment, number of pieces of equipment operating, general conditions, length of time each piece would operate per day, the presence or absence of noise-attenuating features such as walls or other intervening structures, and the location of construction noise sources relative to sensitive receptors. The nearest sensitive receptor to the project site is located approximately 175 feet to the south. The construction noise level at this distance would be approximately 75.5 dBA, L_{eq} with three of the

loudest pieces of construction equipment (concrete/industrial saw, crawler tractor, and compactor) operating at once. This would be less than the *Noise Reference Manual Oahu Edition* maximum noise level of 78 dBA. Effects related to construction noise would not be adverse.

6.2 OPERATIONAL NOISE

Land Use Compatibility for the New Workforce Housing

A detailed land use compatibility analysis was completed to assess noise levels at the project site, including roadway and aircraft sources. The HUD DNL calculator model was used to calculate roadway noise, which is the primary source of noise in the area. As discussed above, the proposed project site is located in a 55 dBA L_{dn} noise contour in relation to the Wheeler Army Airfield. The exterior noise level was estimated to be approximately 68 dBA L_{dn} along Meheula Parkway. This would exceed the HUD exterior noise standard of 65 dBA L_{dn} for the construction of new housing. According to HUD guidance, a project located in an area that exceeds the 65 dBA L_{dn} must demonstrate that interior noise levels would not exceed 45 dBA L_{dn} within the new housing. The HUD guidance states that the materials used with new construction typically provide at least 26 dBA exterior-to-interior noise reduction.[4] This is provided that a ventilation system is installed such that windows may be closed. Assuming a fresh air supply system is installed with the new construction, predicted interior noise levels at the new residence would be approximately 42 dBA L_{dn}. This would be less than the 45 dBA L_{dn} standard recommended by HUD and residents would not be exposed to excessive 24-hour noise.

Off-Site Mobile Source Noise Exposure

New residents would contribute to noise generated on the local roadway network. A comparison between the noise levels of the future year without project and future year with project traffic scenarios was conducted for the analysis. Mobile noise was calculated utilizing the forecasted average daily traffic volume for roadway segments in front of each NAL for both future without project and future with project scenarios. **Table 6-2** shows anticipated noise levels. **Figure 4-1** above shows the NALs. The proposed project's future contribution to mobile source noise levels would be less than 5 dBA and would not result in an adverse effect related to increasing noise levels at on-site or off-site sensitive receptors.

TABLE 6-2: FUTURE 2030 NOISE LEVELS ON THE ROADWAY NETWORK

Figure 4-1 ID	Estimated dBA, L_{dn}			
	Future Without Project	Future With Project	Increase	Exceed 5 dBA Increase?
1	67	67	0	No
2	65	65	0	No
3	64	64	0	No
4	65	65	0	No
5	67	67	0	No
6	65	65	0	No
7	71	71	0	No
8	71	71	0	No

SOURCE: TAHA, 2025.

[4]HUD, The Noise Guidebook, Chapter 4 Supplement, Sound Transmission Class Guidance, page A-25, March 2009.

Off-Site Stationary Noise Exposure

The proposed workforce housing includes limited sources of on-site noise. Typical sources of residential noise includes ventilation systems, tenant conversations, and landscaping and maintenance activities. These sources rarely generate off-site disruptive noise levels. The precise location of ventilation systems were not known when this analysis was prepared. Possible locations include street level and rooftops. Mechanical equipment such as ventilation and air conditioning systems typically generate noise levels of approximately 60 dBA, L_{eq} at 50 feet without enclosures. Enclosures typically reduce noise levels by at least 10 dBA. The nearest sensitive receptor is located approximately 175 feet from the project site. At this distance, noise generated by the mechanical equipment without enclosures would be approximately 49.1 dBA, L_{eq}, which is within the maximum permissible noise limits shown in **Table 3-1**. On-site sources of residential noise would not be significant or adverse.

7.0 CUMULATIVE EFFECTS

The National Environmental Policy Act (NEPA) requires that any agency proposing a major federal action, which may significantly affect the environment, consider the environmental impacts of the proposed action, any unavoidable adverse environmental impacts, and the relationship between local short term uses and long-term productivity of the environment (42 United States Code 4332(c)). There are three types or categories of effect that must be considered during the NEPA process: direct, indirect, and cumulative (40 CFR 1508.25). A direct effect is one which is caused directly by our activities, at the same time, and in the same place. An indirect effect is a reasonably foreseeable effect caused by the proposed action or proposed project but occurs later in time or is further removed from the project site than a direct effect. “Indirect effects may include growth inducing effects and other effects related to induced changes in the pattern of land use, population density or growth rate,” and related effects on resources (40 CFR 1508.8(b)). A cumulative effect is an “impact on the environment which results from the incremental effect of the action when added to other past, present, and reasonably foreseeable future actions” (40 CFR 1508.7). Cumulative effects can result from individually minor but collectively significant actions taking place over time (40 CFR 1508.7).

A cumulative effects analysis is required whenever an Environmental Impact Statement is prepared in accordance with NEPA. A project must have a direct and/or indirect effect on a specific resource to exert a cumulative influence. If no direct and/or indirect effect to a specific resource is expected, there is no need to consider cumulative effects to that resource. As previously discussed, the proposed project would not result in an adverse noise effect, so there would be no potential for the proposed project to have a direct and/or indirect effect on a specific resource. Therefore, a cumulative effect would not occur under NEPA regulations.

Section 11-200-2 of the Hawaii Administrative Rules contains the definition of a “cumulative impact” for Environmental Impact Statements. A “cumulative impact” is defined as the impact on the environment, which results from the incremental impact of the action when added to other past, present, and reasonably foreseeable future actions regardless of what agency or person undertakes such other actions. Cumulative impacts can result from individually minor but collectively significant actions taking place over a period of time.

Noise generated by the proposed project would generally be contained to the project site and unlikely to interact with past, present, and reasonably foreseeable future actions in the immediate vicinity. Project-related vehicle trips would combine with past, present, and reasonably foreseeable future actions to increase traffic noise on the roadway network. **Table 6-2**, above, includes noise levels associated with traffic growth unrelated to the Future with Project and Future without Project in the year 2030. The analysis demonstrates that a cumulative increase in traffic volumes would not result in an adverse effect resulting from an off-site mobile noise level increase. Therefore, a cumulative effect would not occur under State regulations.

Appendix

Noise Calculations

Noise Formulas

Noise Distance Attenuation

Hard Site

Ni = No - 20 * LOG(Di/Do)

Ni = attenuated noise level of interest

No = reference noise level

Di = distance to receptor (Di>Do)

Do = reference distance

Source: (Bolt, Beranek, and Newman, 1971)

Summation of Noise Levels

Equation: Ns=10 x LOG10((10^(N1/10))+(10^(N2/10))+(10^(N3/10))+(10^(N4/10)))

Ns = Noise Level Sum

N1 = Noise Level 1

N2 = Noise Level 2

N3 = Noise Level 3

N4 = Noise Level 4

=10*LOG(SUM(10^(UserRange/10)))

Source: California Department of Transportation, Technical Noise Supplement, 2013

Construction Equipment Noise Levels	
Construction Equipment	**Noise Level at 50 ft (dBA, Leq)**
Aerial Lifts	67.7
Air Compressors	73.7
Cement and Mortar Mixers	74.8
Compactor	76.2
Compressor	73.7
Concrete Delivery Trucks	70.3
Concrete Mixer	74.8
Concrete Pump Truck	74.4
Concrete/Industrial Saws	**82.6**
Crane	72.6
Crawler Tractors	**80.0**
Drum Rollers	77.0
Dump Truck	72.5
Dumpster Truck	72.5
Excavator	76.7
Flat Bed Delivery Trucks	70.3
Forklifts	79.4
Generators	77.6
Gradall/Telehandler	79.4
Hoerams	80.0
Jack Hammer	**81.9**
Jumping Jack (compacter)	76.2
Masonry Saw	82.6
Pavers	74.2
Rollers	73.0
Scissors Lift	67.7
Skid/Track Loader	75.1
Sled (compactor)	76.2
Tractors/Loaders/Backhoes	80.0
Welder	70.0
Combined Equipment Noise	**86.4**

SOURCE: Federal Highway Administration, *Roadway Construction Noise Model* , Version 1.1, 2008.

CONSTRUCTION NOISE LEVELS AT SENSITIVE RECEPTORS					
Sensitive Receptors	**Distance (feet)**	**Intervening Building /a/**	**Reference Noise Level (dBA)**	**Construction Noise at Receptor (dBA, Leq)**	**Existing Ambient (dBA, Ldn)**
The Church of Jesus Christ of Latter Day Saints	175	0	86.4	75.5	64.0
/a/ -4.5 dB for on intervening row of buildings and -1.5 dB for each subsequent row.					
SOURCE: TAHA, 2025.					

MECHANICAL EQUIPMENT NOISE LEVELS AT SENSITIVE RECEPTORS					
Sensitive Receptors	**Distance (feet)**	**Intervening Building /a/**	**Reference Noise Level (dBA)**	**Construction Noise at Receptor (dBA, Leq)**	**Existing Ambient (dBA, Ldn)**
The Church of Jesus Christ of Latter Day Saints	175	0	60.0	49.1	64.0
/a/ -4.5 dB for on intervening row of buildings and -1.5 dB for each subsequent row.					
SOURCE: TAHA, 2025.					

Roadway Noise Analysis

Day/Night Noise Level (DNL) Calculator

The Day/Night Noise Level Calculator is an electronic assessment tool that calculates the Day/Night Noise Level (DNL) from roadway and railway traffic. For more information on using the DNL calculator, view the **Day/Night Noise Level Calculator Electronic Assessment Tool Overview (/programs/environmental-review/daynight-noise-level-electronic-assessment-tool/)**.

Guidelines

- To display the Road and/or Rail DNL calculator(s), click on the "Add Road Source" and/or "Add Rail Source" button(s) below.
- All Road and Rail input values must be positive non-decimal numbers.
- All Road and/or Rail DNL value(s) must be calculated separately before calculating the Site DNL.
- All checkboxes that apply must be checked for vehicles and trains in the tables' headers.
- **Note #1:** Tooltips, containing field specific information, have been added in this tool and may be accessed by hovering over all the respective data fields (site identification, roadway and railway assessment, DNL calculation results, roadway and railway input variables) with the mouse.
- **Note #2:** DNL Calculator assumes roadway data is always entered.

DNL Calculator

Site ID	NAL1_Build_Residences W of Kamehameha Hwy. N of Meheula Pkwy
Record Date	11 / 05 / 2025
User's Name	Karen To

Road # 1 Name:	**Kamehameha Hwy. north of Meheula Pkwy.**

Vehicle Type	Cars ☑	Medium Trucks ☑	Heavy Trucks ☑
Effective Distance	125	125	125
Distance to Stop Sign			
Average Speed	35	35	35
Average Daily Trips (ADT)	14876	152	152
Night Fraction of ADT	15	15	15
Road Gradient (%)			2
Vehicle DNL	60	50	60
Calculate Road #1 DNL	63	Reset	

Road # 2 Name:	**Meheula Pkwy. west of Kamehameha Hwy.**

Road #2

Vehicle Type	Cars ☑	Medium Trucks ☑	Heavy Trucks ☑
Effective Distance	70	70	70
Distance to Stop Sign			
Average Speed	35	35	35
Average Daily Trips (ADT)	9888	101	101
Night Fraction of ADT	15	15	15
Road Gradient (%)			2
Vehicle DNL	62	52	62

Add Road Source Add Rail Source	
Airport Noise Level	55
Loud Impulse Sounds?	○ **Yes** ◉ **No**
Combined DNL for all Road and Rail sources	**67**
Combined DNL including Airport	**67**
Site DNL with Loud Impulse Sound	

Calculate Reset

Mitigation Options

If your site DNL is in Excess of 65 decibels, your options are:

- **No Action Alternative**: Cancel the project at this location
- **Other Reasonable Alternatives**: Choose an alternate site
- **Mitigation**
  - **Contact your Field or Regional Environmental Officer (/programs/environmental-review/hud-environmental-staff-contacts/)**
  - Increase mitigation in the building walls (only effective if no outdoor, noise sensitive areas)
  - Reconfigure the site plan to increase the distance between the noise source and noise-sensitive uses
  - Incorporate natural or man-made barriers.
  - Construct noise barrier. See the **Barrier Performance Module (/programs/environmental-review/bpm-calculator/)**

Day/Night Noise Level Assessment Tool User Guide (/resource/3822/day-night-noise-level-assessment-tool-user-guide/)

Day/Night Noise Level Assessment Tool Flowcharts (/resource/3823/day-night-noise-level-assessment-tool-flowcharts/)

Federal Railroad Administration Railroad Operations Data Sources (https://www.hudexchange.info/resource/6027/federal-railroad-administration-railroad-operations-data-sources/)

Day/Night Noise Level (DNL) Calculator

The Day/Night Noise Level Calculator is an electronic assessment tool that calculates the Day/Night Noise Level (DNL) from roadway and railway traffic. For more information on using the DNL calculator, view the **Day/Night Noise Level Calculator Electronic Assessment Tool Overview (/programs/environmental-review/daynight-noise-level-electronic-assessment-tool/)**.

Guidelines

- To display the Road and/or Rail DNL calculator(s), click on the "Add Road Source" and/or "Add Rail Source" button(s) below.
- All Road and Rail input values must be positive non-decimal numbers.
- All Road and/or Rail DNL value(s) must be calculated separately before calculating the Site DNL.
- All checkboxes that apply must be checked for vehicles and trains in the tables' headers.
- **Note #1:** Tooltips, containing field specific information, have been added in this tool and may be accessed by hovering over all the respective data fields (site identification, roadway and railway assessment, DNL calculation results, roadway and railway input variables) with the mouse.
- **Note #2:** DNL Calculator assumes roadway data is always entered.

DNL Calculator

Site ID	NAL1_Existing_Residences W of Kamehameha Hwy. N of Meheula Pl
Record Date	11 / 05 / 2025
User's Name	Karen To

Road # 1 Name:	**Kamehameha Hwy. north of Meheula Pkwy.**

Vehicle Type	Cars ☑	Medium Trucks ☑	Heavy Trucks ☑
Effective Distance	125	125	125
Distance to Stop Sign			
Average Speed	35	35	35
Average Daily Trips (ADT)	14249	145	145
Night Fraction of ADT	15	15	15
Road Gradient (%)			2
Vehicle DNL	59	49	60
Calculate Road #1 DNL	63	Reset	

Road # 2 Name:	**Meheula Pkwy. west of Kamehameha Hwy.**

Road #2

Vehicle Type	Cars ☑	Medium Trucks ☑	Heavy Trucks ☑
Effective Distance	70	70	70
Distance to Stop Sign			
Average Speed	35	35	35
Average Daily Trips (ADT)	9398	96	96
Night Fraction of ADT	15	15	15
Road Gradient (%)			2
Vehicle DNL	61	51	62

Add Road Source Add Rail Source	
Airport Noise Level	55
Loud Impulse Sounds?	○ **Yes** ◉ **No**
Combined DNL for all Road and Rail sources	**67**
Combined DNL including Airport	**67**
Site DNL with Loud Impulse Sound	

Calculate Reset

Mitigation Options

If your site DNL is in Excess of 65 decibels, your options are:

- **No Action Alternative**: Cancel the project at this location
- **Other Reasonable Alternatives**: Choose an alternate site
- **Mitigation**
  - **Contact your Field or Regional Environmental Officer (/programs/environmental-review/hud-environmental-staff-contacts/)**
  - Increase mitigation in the building walls (only effective if no outdoor, noise sensitive areas)
  - Reconfigure the site plan to increase the distance between the noise source and noise-sensitive uses
  - Incorporate natural or man-made barriers.
  - Construct noise barrier. See the **Barrier Performance Module (/programs/environmental-review/bpm-calculator/)**

Day/Night Noise Level Assessment Tool User Guide (/resource/3822/day-night-noise-level-assessment-tool-user-guide/)

Day/Night Noise Level Assessment Tool Flowcharts (/resource/3823/day-night-noise-level-assessment-tool-flowcharts/)

Federal Railroad Administration Railroad Operations Data Sources (https://www.hudexchange.info/resource/6027/federal-railroad-administration-railroad-operations-data-sources/)

Day/Night Noise Level (DNL) Calculator

The Day/Night Noise Level Calculator is an electronic assessment tool that calculates the Day/Night Noise Level (DNL) from roadway and railway traffic. For more information on using the DNL calculator, view the **Day/Night Noise Level Calculator Electronic Assessment Tool Overview (/programs/environmental-review/daynight-noise-level-electronic-assessment-tool/)**.

Guidelines

- To display the Road and/or Rail DNL calculator(s), click on the "Add Road Source" and/or "Add Rail Source" button(s) below.
- All Road and Rail input values must be positive non-decimal numbers.
- All Road and/or Rail DNL value(s) must be calculated separately before calculating the Site DNL.
- All checkboxes that apply must be checked for vehicles and trains in the tables' headers.
- **Note #1:** Tooltips, containing field specific information, have been added in this tool and may be accessed by hovering over all the respective data fields (site identification, roadway and railway assessment, DNL calculation results, roadway and railway input variables) with the mouse.
- **Note #2:** DNL Calculator assumes roadway data is always entered.

DNL Calculator

Site ID	NAL1_No Build_Residences W of Kamehameha Hwy. N of Meheula P
Record Date	11 / 05 / 2025
User's Name	Karen To

Road # 1 Name:	**Kamehameha Hwy. north of Meheula Pkwy.**

Vehicle Type	Cars ☑	Medium Trucks ☑	Heavy Trucks ☑
Effective Distance	125	125	125
Distance to Stop Sign			
Average Speed	35	35	35
Average Daily Trips (ADT)	14798	151	151
Night Fraction of ADT	15	15	15
Road Gradient (%)			2
Vehicle DNL	60	50	60
Calculate Road #1 DNL	63	Reset	

Road # 2 Name: **Meheula Pkwy. west of Kamehameha Hwy.**

Road #2

Vehicle Type	Cars ☑	Medium Trucks ☑	Heavy Trucks ☑
Effective Distance	70	70	70
Distance to Stop Sign			
Average Speed	35	35	35
Average Daily Trips (ADT)	9702	99	99
Night Fraction of ADT	15	15	15
Road Gradient (%)			2
Vehicle DNL	61	52	62

Add Road Source Add Rail Source	
Airport Noise Level	55
Loud Impulse Sounds?	○ **Yes** ◉ **No**
Combined DNL for all Road and Rail sources	**67**
Combined DNL including Airport	**67**
Site DNL with Loud Impulse Sound	

Calculate Reset

Mitigation Options

If your site DNL is in Excess of 65 decibels, your options are:

- **No Action Alternative**: Cancel the project at this location
- **Other Reasonable Alternatives**: Choose an alternate site
- **Mitigation**
  - **Contact your Field or Regional Environmental Officer (/programs/environmental-review/hud-environmental-staff-contacts/)**
  - Increase mitigation in the building walls (only effective if no outdoor, noise sensitive areas)
  - Reconfigure the site plan to increase the distance between the noise source and noise-sensitive uses
  - Incorporate natural or man-made barriers.
  - Construct noise barrier. See the **Barrier Performance Module (/programs/environmental-review/bpm-calculator/)**

Day/Night Noise Level Assessment Tool User Guide (/resource/3822/day-night-noise-level-assessment-tool-user-guide/)

Day/Night Noise Level Assessment Tool Flowcharts (/resource/3823/day-night-noise-level-assessment-tool-flowcharts/)

Federal Railroad Administration Railroad Operations Data Sources (https://www.hudexchange.info/resource/6027/federal-railroad-administration-railroad-operations-data-sources/)

Day/Night Noise Level (DNL) Calculator

The Day/Night Noise Level Calculator is an electronic assessment tool that calculates the Day/Night Noise Level (DNL) from roadway and railway traffic. For more information on using the DNL calculator, view the **Day/Night Noise Level Calculator Electronic Assessment Tool Overview (/programs/environmental-review/daynight-noise-level-electronic-assessment-tool/)**.

Guidelines

- To display the Road and/or Rail DNL calculator(s), click on the "Add Road Source" and/or "Add Rail Source" button(s) below.
- All Road and Rail input values must be positive non-decimal numbers.
- All Road and/or Rail DNL value(s) must be calculated separately before calculating the Site DNL.
- All checkboxes that apply must be checked for vehicles and trains in the tables' headers.
- **Note #1:** Tooltips, containing field specific information, have been added in this tool and may be accessed by hovering over all the respective data fields (site identification, roadway and railway assessment, DNL calculation results, roadway and railway input variables) with the mouse.
- **Note #2:** DNL Calculator assumes roadway data is always entered.

DNL Calculator

Site ID	NAL2_Build_Residences W of Kamehameha Hwy. S of Meheula Pkwy
Record Date	11 / 05 / 2025
User's Name	Karen To

Road # 1 Name:	**Kamehameha Hwy. south of Meheula Pkwy.**

Vehicle Type	Cars ☑	Medium Trucks ☑	Heavy Trucks ☑
Effective Distance	80	80	80
Distance to Stop Sign			
Average Speed	35	35	35
Average Daily Trips (ADT)	10241	105	105
Night Fraction of ADT	15	15	15
Road Gradient (%)			2
Vehicle DNL	61	51	61
Calculate Road #1 DNL	64	Reset	

Road # 2 Name: **Meheula Pkwy. west of Kamehameha Hwy.**

Road #2

Vehicle Type	Cars ☑	Medium Trucks ☑	Heavy Trucks ☑
Effective Distance	445	445	445
Distance to Stop Sign			
Average Speed	35	35	35
Average Daily Trips (ADT)	9888	101	101
Night Fraction of ADT	15	15	15
Road Gradient (%)			2
Vehicle DNL	50	40	50

Add Road Source Add Rail Source	
Airport Noise Level	55
Loud Impulse Sounds?	○ **Yes** ◉ **No**
Combined DNL for all Road and Rail sources	**65**
Combined DNL including Airport	**65**
Site DNL with Loud Impulse Sound	

Calculate Reset

Mitigation Options

If your site DNL is in Excess of 65 decibels, your options are:

- **No Action Alternative**: Cancel the project at this location
- **Other Reasonable Alternatives**: Choose an alternate site
- **Mitigation**
  - **Contact your Field or Regional Environmental Officer (/programs/environmental-review/hud-environmental-staff-contacts/)**
  - Increase mitigation in the building walls (only effective if no outdoor, noise sensitive areas)
  - Reconfigure the site plan to increase the distance between the noise source and noise-sensitive uses
  - Incorporate natural or man-made barriers.
  - Construct noise barrier. See the **Barrier Performance Module (/programs/environmental-review/bpm-calculator/)**

Day/Night Noise Level Assessment Tool User Guide (/resource/3822/day-night-noise-level-assessment-tool-user-guide/)

Day/Night Noise Level Assessment Tool Flowcharts (/resource/3823/day-night-noise-level-assessment-tool-flowcharts/)

Federal Railroad Administration Railroad Operations Data Sources (https://www.hudexchange.info/resource/6027/federal-railroad-administration-railroad-operations-data-sources/)

Day/Night Noise Level (DNL) Calculator

The Day/Night Noise Level Calculator is an electronic assessment tool that calculates the Day/Night Noise Level (DNL) from roadway and railway traffic. For more information on using the DNL calculator, view the **Day/Night Noise Level Calculator Electronic Assessment Tool Overview (/programs/environmental-review/daynight-noise-level-electronic-assessment-tool/)**.

Guidelines

- To display the Road and/or Rail DNL calculator(s), click on the "Add Road Source" and/or "Add Rail Source" button(s) below.
- All Road and Rail input values must be positive non-decimal numbers.
- All Road and/or Rail DNL value(s) must be calculated separately before calculating the Site DNL.
- All checkboxes that apply must be checked for vehicles and trains in the tables' headers.
- **Note #1:** Tooltips, containing field specific information, have been added in this tool and may be accessed by hovering over all the respective data fields (site identification, roadway and railway assessment, DNL calculation results, roadway and railway input variables) with the mouse.
- **Note #2:** DNL Calculator assumes roadway data is always entered.

DNL Calculator

Site ID	NAL2_Existing_Residences W of Kamehameha Hwy. S of Meheula Pk
Record Date	11 / 05 / 2025
User's Name	Karen To

Road # 1 Name:	**Kamehameha Hwy. south of Meheula Pkwy.**

Vehicle Type	Cars ☑	Medium Trucks ☑	Heavy Trucks ☑
Effective Distance	80	80	80
Distance to Stop Sign			
Average Speed	35	35	35
Average Daily Trips (ADT)	9810	100	100
Night Fraction of ADT	15	15	15
Road Gradient (%)			2
Vehicle DNL	61	51	61
Calculate Road #1 DNL	64	Reset	

Road # 2 Name:	**Meheula Pkwy. west of Kamehameha Hwy.**

Road #2

Vehicle Type	Cars ☑	Medium Trucks ☑	Heavy Trucks ☑
Effective Distance	445	445	445
Distance to Stop Sign			
Average Speed	35	35	35
Average Daily Trips (ADT)	9398	96	96
Night Fraction of ADT	15	15	15
Road Gradient (%)			2
Vehicle DNL	49	39	50

Add Road Source Add Rail Source	
Airport Noise Level	55
Loud Impulse Sounds?	○ **Yes** ◉ **No**
Combined DNL for all Road and Rail sources	**64**
Combined DNL including Airport	**65**
Site DNL with Loud Impulse Sound	

Calculate Reset

Mitigation Options

If your site DNL is in Excess of 65 decibels, your options are:

- **No Action Alternative**: Cancel the project at this location
- **Other Reasonable Alternatives**: Choose an alternate site
- **Mitigation**
  - **Contact your Field or Regional Environmental Officer (/programs/environmental-review/hud-environmental-staff-contacts/)**
  - Increase mitigation in the building walls (only effective if no outdoor, noise sensitive areas)
  - Reconfigure the site plan to increase the distance between the noise source and noise-sensitive uses
  - Incorporate natural or man-made barriers.
  - Construct noise barrier. See the **Barrier Performance Module (/programs/environmental-review/bpm-calculator/)**

Day/Night Noise Level Assessment Tool User Guide (/resource/3822/day-night-noise-level-assessment-tool-user-guide/)

Day/Night Noise Level Assessment Tool Flowcharts (/resource/3823/day-night-noise-level-assessment-tool-flowcharts/)

Federal Railroad Administration Railroad Operations Data Sources (https://www.hudexchange.info/resource/6027/federal-railroad-administration-railroad-operations-data-sources/)

Day/Night Noise Level (DNL) Calculator

The Day/Night Noise Level Calculator is an electronic assessment tool that calculates the Day/Night Noise Level (DNL) from roadway and railway traffic. For more information on using the DNL calculator, view the **Day/Night Noise Level Calculator Electronic Assessment Tool Overview (/programs/environmental-review/daynight-noise-level-electronic-assessment-tool/)**.

Guidelines

- To display the Road and/or Rail DNL calculator(s), click on the "Add Road Source" and/or "Add Rail Source" button(s) below.
- All Road and Rail input values must be positive non-decimal numbers.
- All Road and/or Rail DNL value(s) must be calculated separately before calculating the Site DNL.
- All checkboxes that apply must be checked for vehicles and trains in the tables' headers.
- **Note #1:** Tooltips, containing field specific information, have been added in this tool and may be accessed by hovering over all the respective data fields (site identification, roadway and railway assessment, DNL calculation results, roadway and railway input variables) with the mouse.
- **Note #2:** DNL Calculator assumes roadway data is always entered.

DNL Calculator

Site ID	NAL2_No Build_Residences W of Kamehameha Hwy. S of Meheula P
Record Date	11 / 05 / 2025
User's Name	Karen To

Road # 1 Name:	**Kamehameha Hwy. south of Meheula Pkwy.**

Vehicle Type	Cars ☑	Medium Trucks ☑	Heavy Trucks ☑
Effective Distance	80	80	80
Distance to Stop Sign			
Average Speed	35	35	35
Average Daily Trips (ADT)	10192	104	104
Night Fraction of ADT	15	15	15
Road Gradient (%)			2
Vehicle DNL	61	51	61
Calculate Road #1 DNL	64	Reset	

Road # 2 Name: **Meheula Pkwy. west of Kamehameha Hwy.**

Road #2

Vehicle Type	Cars ☑	Medium Trucks ☑	Heavy Trucks ☑
Effective Distance	445	445	445
Distance to Stop Sign			
Average Speed	35	35	35
Average Daily Trips (ADT)	9702	99	99
Night Fraction of ADT	15	15	15
Road Gradient (%)			2
Vehicle DNL	49	40	50

Add Road Source Add Rail Source	
Airport Noise Level	55
Loud Impulse Sounds?	○ **Yes** ◉ **No**
Combined DNL for all Road and Rail sources	**65**
Combined DNL including Airport	**65**
Site DNL with Loud Impulse Sound	

Calculate Reset

Mitigation Options

If your site DNL is in Excess of 65 decibels, your options are:

- **No Action Alternative**: Cancel the project at this location
- **Other Reasonable Alternatives**: Choose an alternate site
- **Mitigation**
  - **Contact your Field or Regional Environmental Officer (/programs/environmental-review/hud-environmental-staff-contacts/)**
  - Increase mitigation in the building walls (only effective if no outdoor, noise sensitive areas)
  - Reconfigure the site plan to increase the distance between the noise source and noise-sensitive uses
  - Incorporate natural or man-made barriers.
  - Construct noise barrier. See the **Barrier Performance Module (/programs/environmental-review/bpm-calculator/)**

Day/Night Noise Level Assessment Tool User Guide (/resource/3822/day-night-noise-level-assessment-tool-user-guide/)

Day/Night Noise Level Assessment Tool Flowcharts (/resource/3823/day-night-noise-level-assessment-tool-flowcharts/)

Federal Railroad Administration Railroad Operations Data Sources (https://www.hudexchange.info/resource/6027/federal-railroad-administration-railroad-operations-data-sources/)

Day/Night Noise Level (DNL) Calculator

The Day/Night Noise Level Calculator is an electronic assessment tool that calculates the Day/Night Noise Level (DNL) from roadway and railway traffic. For more information on using the DNL calculator, view the **Day/Night Noise Level Calculator Electronic Assessment Tool Overview (/programs/environmental-review/daynight-noise-level-electronic-assessment-tool/)**.

Guidelines

- To display the Road and/or Rail DNL calculator(s), click on the "Add Road Source" and/or "Add Rail Source" button(s) below.
- All Road and Rail input values must be positive non-decimal numbers.
- All Road and/or Rail DNL value(s) must be calculated separately before calculating the Site DNL.
- All checkboxes that apply must be checked for vehicles and trains in the tables' headers.
- **Note #1:** Tooltips, containing field specific information, have been added in this tool and may be accessed by hovering over all the respective data fields (site identification, roadway and railway assessment, DNL calculation results, roadway and railway input variables) with the mouse.
- **Note #2:** DNL Calculator assumes roadway data is always entered.

DNL Calculator

Site ID	NAL3_Build_The Church of Jesus Christ of Latter Day Saints
Record Date	11 / 05 / 2025
User's Name	Karen To

Road # 1 Name:	**Meheula Pkwy. from Kamehameha Hwy. to church driveway**

Vehicle Type	Cars ☑	Medium Trucks ☑	Heavy Trucks ☑
Effective Distance	90	90	90
Distance to Stop Sign			
Average Speed	25	25	25
Average Daily Trips (ADT)	13642	139	139
Night Fraction of ADT	15	15	15
Road Gradient (%)			2
Vehicle DNL	58	48	62
Calculate Road #1 DNL	64	Reset	

Add Road Source | Add Rail Source

Airport Noise Level	55
Loud Impulse Sounds?	○ Yes ◉ No
Combined DNL for all Road and Rail sources	**64**
Combined DNL including Airport	**64**
Site DNL with Loud Impulse Sound	

Calculate | Reset

Mitigation Options

If your site DNL is in Excess of 65 decibels, your options are:

- **No Action Alternative**: Cancel the project at this location
- **Other Reasonable Alternatives**: Choose an alternate site
- **Mitigation**
    - **Contact your Field or Regional Environmental Officer (/programs/environmental-review/hud-environmental-staff-contacts/)**
    - Increase mitigation in the building walls (only effective if no outdoor, noise sensitive areas)
    - Reconfigure the site plan to increase the distance between the noise source and noise-sensitive uses
    - Incorporate natural or man-made barriers.
    - Construct noise barrier. See the **Barrier Performance Module (/programs/environmental-review/bpm-calculator/)**

Tools and Guidance

Day/Night Noise Level Assessment Tool User Guide (/resource/3822/day-night-noise-level-assessment-tool-user-guide/)

Day/Night Noise Level Assessment Tool Flowcharts (/resource/3823/day-night-noise-level-assessment-tool-flowcharts/)

Federal Railroad Administration Railroad Operations Data Sources (https://www.hudexchange.info/resource/6027/federal-railroad-administration-railroad-operations-data-sources/)

Day/Night Noise Level (DNL) Calculator

The Day/Night Noise Level Calculator is an electronic assessment tool that calculates the Day/Night Noise Level (DNL) from roadway and railway traffic. For more information on using the DNL calculator, view the **Day/Night Noise Level Calculator Electronic Assessment Tool Overview (/programs/environmental-review/daynight-noise-level-electronic-assessment-tool/)**.

Guidelines

- To display the Road and/or Rail DNL calculator(s), click on the "Add Road Source" and/or "Add Rail Source" button(s) below.
- All Road and Rail input values must be positive non-decimal numbers.
- All Road and/or Rail DNL value(s) must be calculated separately before calculating the Site DNL.
- All checkboxes that apply must be checked for vehicles and trains in the tables' headers.
- **Note #1:** Tooltips, containing field specific information, have been added in this tool and may be accessed by hovering over all the respective data fields (site identification, roadway and railway assessment, DNL calculation results, roadway and railway input variables) with the mouse.
- **Note #2:** DNL Calculator assumes roadway data is always entered.

DNL Calculator

Site ID	NAL3_Existing_The Church of Jesus Christ of Latter Day Saints
Record Date	11 / 05 / 2025
User's Name	Karen To

Road # 1 Name:	**Meheula Pkwy. from Kamehameha Hwy. to church driveway**

Vehicle Type	Cars ☑	Medium Trucks ☑	Heavy Trucks ☑
Effective Distance	90	90	90
Distance to Stop Sign			
Average Speed	25	25	25
Average Daily Trips (ADT)	12956	132	132
Night Fraction of ADT	15	15	15
Road Gradient (%)			2
Vehicle DNL	58	48	62
Calculate Road #1 DNL	63	Reset	

Add Road Source | Add Rail Source

Airport Noise Level	55
Loud Impulse Sounds?	○ **Yes** ◉ **No**
Combined DNL for all Road and Rail sources	**63**
Combined DNL including Airport	**64**
Site DNL with Loud Impulse Sound	

Calculate | Reset

Mitigation Options

If your site DNL is in Excess of 65 decibels, your options are:

- **No Action Alternative**: Cancel the project at this location
- **Other Reasonable Alternatives**: Choose an alternate site
- **Mitigation**
    - **Contact your Field or Regional Environmental Officer (/programs/environmental-review/hud-environmental-staff-contacts/)**
    - Increase mitigation in the building walls (only effective if no outdoor, noise sensitive areas)
    - Reconfigure the site plan to increase the distance between the noise source and noise-sensitive uses
    - Incorporate natural or man-made barriers.
    - Construct noise barrier. See the **Barrier Performance Module (/programs/environmental-review/bpm-calculator/)**

Tools and Guidance

Day/Night Noise Level Assessment Tool User Guide (/resource/3822/day-night-noise-level-assessment-tool-user-guide/)

Day/Night Noise Level Assessment Tool Flowcharts (/resource/3823/day-night-noise-level-assessment-tool-flowcharts/)

Federal Railroad Administration Railroad Operations Data Sources (https://www.hudexchange.info/resource/6027/federal-railroad-administration-railroad-operations-data-sources/)

Day/Night Noise Level (DNL) Calculator

The Day/Night Noise Level Calculator is an electronic assessment tool that calculates the Day/Night Noise Level (DNL) from roadway and railway traffic. For more information on using the DNL calculator, view the **Day/Night Noise Level Calculator Electronic Assessment Tool Overview (/programs/environmental-review/daynight-noise-level-electronic-assessment-tool/)**.

Guidelines

- To display the Road and/or Rail DNL calculator(s), click on the "Add Road Source" and/or "Add Rail Source" button(s) below.
- All Road and Rail input values must be positive non-decimal numbers.
- All Road and/or Rail DNL value(s) must be calculated separately before calculating the Site DNL.
- All checkboxes that apply must be checked for vehicles and trains in the tables' headers.
- **Note #1:** Tooltips, containing field specific information, have been added in this tool and may be accessed by hovering over all the respective data fields (site identification, roadway and railway assessment, DNL calculation results, roadway and railway input variables) with the mouse.
- **Note #2:** DNL Calculator assumes roadway data is always entered.

DNL Calculator

Site ID	NAL3_NoBuild_The Church of Jesus Christ of Latter Day Saints
Record Date	11 / 05 / 2025
User's Name	Karen To

Road # 1 Name:	**Meheula Pkwy. from Kamehameha Hwy. to church driveway**

Vehicle Type	Cars ☑	Medium Trucks ☑	Heavy Trucks ☑
Effective Distance	90	90	90
Distance to Stop Sign			
Average Speed	25	25	25
Average Daily Trips (ADT)	13426	137	137
Night Fraction of ADT	15	15	15
Road Gradient (%)			2
Vehicle DNL	58	48	62
Calculate Road #1 DNL	64	Reset	

Add Road Source | Add Rail Source

Airport Noise Level	55
Loud Impulse Sounds?	○ Yes ◉ No
Combined DNL for all Road and Rail sources	**64**
Combined DNL including Airport	**64**
Site DNL with Loud Impulse Sound	

Calculate | Reset

Mitigation Options

If your site DNL is in Excess of 65 decibels, your options are:

- **No Action Alternative**: Cancel the project at this location
- **Other Reasonable Alternatives**: Choose an alternate site
- **Mitigation**
    - **Contact your Field or Regional Environmental Officer (/programs/environmental-review/hud-environmental-staff-contacts/)**
    - Increase mitigation in the building walls (only effective if no outdoor, noise sensitive areas)
    - Reconfigure the site plan to increase the distance between the noise source and noise-sensitive uses
    - Incorporate natural or man-made barriers.
    - Construct noise barrier. See the **Barrier Performance Module (/programs/environmental-review/bpm-calculator/)**

Tools and Guidance

Day/Night Noise Level Assessment Tool User Guide (/resource/3822/day-night-noise-level-assessment-tool-user-guide/)

Day/Night Noise Level Assessment Tool Flowcharts (/resource/3823/day-night-noise-level-assessment-tool-flowcharts/)

Federal Railroad Administration Railroad Operations Data Sources (https://www.hudexchange.info/resource/6027/federal-railroad-administration-railroad-operations-data-sources/)

Day/Night Noise Level (DNL) Calculator

The Day/Night Noise Level Calculator is an electronic assessment tool that calculates the Day/Night Noise Level (DNL) from roadway and railway traffic. For more information on using the DNL calculator, view the **Day/Night Noise Level Calculator Electronic Assessment Tool Overview (/programs/environmental-review/daynight-noise-level-electronic-assessment-tool/)**.

Guidelines

- To display the Road and/or Rail DNL calculator(s), click on the "Add Road Source" and/or "Add Rail Source" button(s) below.
- All Road and Rail input values must be positive non-decimal numbers.
- All Road and/or Rail DNL value(s) must be calculated separately before calculating the Site DNL.
- All checkboxes that apply must be checked for vehicles and trains in the tables' headers.
- **Note #1:** Tooltips, containing field specific information, have been added in this tool and may be accessed by hovering over all the respective data fields (site identification, roadway and railway assessment, DNL calculation results, roadway and railway input variables) with the mouse.
- **Note #2:** DNL Calculator assumes roadway data is always entered.

DNL Calculator

Site ID	NAL4_Build_Residences to the south along Anania Dr.
Record Date	11 / 05 / 2025
User's Name	Karen To

Road # 1 Name:	**Meheula Pkwy. from church driveway to Anania Dr.**

Vehicle Type	Cars ☑	Medium Trucks ☑	Heavy Trucks ☑
Effective Distance	155	155	155
Distance to Stop Sign			
Average Speed	25	25	25
Average Daily Trips (ADT)	11887	121	121
Night Fraction of ADT	15	15	15
Road Gradient (%)			2
Vehicle DNL	54	44	58
Calculate Road #1 DNL	59	Reset	

Road # 2 Name:	**Anania Dr. south of Meheula Pkwy.**

Road #2

Vehicle Type	Cars ☑	Medium Trucks ☑	Heavy Trucks ☑
Effective Distance	40	40	40
Distance to Stop Sign			
Average Speed	25	25	25
Average Daily Trips (ADT)	3038	31	31
Night Fraction of ADT	15	15	15
Road Gradient (%)			2
Vehicle DNL	57	47	61

Add Road Source Add Rail Source	
Airport Noise Level	55
Loud Impulse Sounds?	○ **Yes** ◉ **No**
Combined DNL for all Road and Rail sources	**64**
Combined DNL including Airport	**65**
Site DNL with Loud Impulse Sound	

Calculate Reset

Mitigation Options

If your site DNL is in Excess of 65 decibels, your options are:

- **No Action Alternative**: Cancel the project at this location
- **Other Reasonable Alternatives**: Choose an alternate site
- **Mitigation**
  - **Contact your Field or Regional Environmental Officer (/programs/environmental-review/hud-environmental-staff-contacts/)**
  - Increase mitigation in the building walls (only effective if no outdoor, noise sensitive areas)
  - Reconfigure the site plan to increase the distance between the noise source and noise-sensitive uses
  - Incorporate natural or man-made barriers.
  - Construct noise barrier. See the **Barrier Performance Module (/programs/environmental-review/bpm-calculator/)**

Day/Night Noise Level Assessment Tool User Guide (/resource/3822/day-night-noise-level-assessment-tool-user-guide/)

Day/Night Noise Level Assessment Tool Flowcharts (/resource/3823/day-night-noise-level-assessment-tool-flowcharts/)

Federal Railroad Administration Railroad Operations Data Sources (https://www.hudexchange.info/resource/6027/federal-railroad-administration-railroad-operations-data-sources/)

Day/Night Noise Level (DNL) Calculator

The Day/Night Noise Level Calculator is an electronic assessment tool that calculates the Day/Night Noise Level (DNL) from roadway and railway traffic. For more information on using the DNL calculator, view the **Day/Night Noise Level Calculator Electronic Assessment Tool Overview (/programs/environmental-review/daynight-noise-level-electronic-assessment-tool/)**.

Guidelines

- To display the Road and/or Rail DNL calculator(s), click on the "Add Road Source" and/or "Add Rail Source" button(s) below.
- All Road and Rail input values must be positive non-decimal numbers.
- All Road and/or Rail DNL value(s) must be calculated separately before calculating the Site DNL.
- All checkboxes that apply must be checked for vehicles and trains in the tables' headers.
- **Note #1:** Tooltips, containing field specific information, have been added in this tool and may be accessed by hovering over all the respective data fields (site identification, roadway and railway assessment, DNL calculation results, roadway and railway input variables) with the mouse.
- **Note #2:** DNL Calculator assumes roadway data is always entered.

DNL Calculator

Site ID	NAL4_Existing_Residences to the south along Anania Dr.
Record Date	11 / 05 / 2025
User's Name	Karen To

Road # 1 Name:	**Meheula Pkwy. from church driveway to Anania Dr.**

Vehicle Type	Cars ☑	Medium Trucks ☑	Heavy Trucks ☑
Effective Distance	155	155	155
Distance to Stop Sign			
Average Speed	25	25	25
Average Daily Trips (ADT)	11241	115	115
Night Fraction of ADT	15	15	15
Road Gradient (%)			2
Vehicle DNL	54	44	57
Calculate Road #1 DNL	59	Reset	

Road # 2 Name:	**Anania Dr. south of Meheula Pkwy.**

Road #2

Vehicle Type	Cars ☑	Medium Trucks ☑	Heavy Trucks ☑
Effective Distance	40	40	40
Distance to Stop Sign			
Average Speed	25	25	25
Average Daily Trips (ADT)	2891	30	30
Night Fraction of ADT	15	15	15
Road Gradient (%)			2
Vehicle DNL	57	47	60

Calculate Road #2 DNL | 62 | Reset

Add Road Source | Add Rail Source

Airport Noise Level	55
Loud Impulse Sounds?	○ **Yes** ◉ **No**
Combined DNL for all Road and Rail sources	**64**
Combined DNL including Airport	**64**
Site DNL with Loud Impulse Sound	

Calculate | Reset

Mitigation Options

If your site DNL is in Excess of 65 decibels, your options are:

- **No Action Alternative**: Cancel the project at this location
- **Other Reasonable Alternatives**: Choose an alternate site
- **Mitigation**
  - **Contact your Field or Regional Environmental Officer (/programs/environmental-review/hud-environmental-staff-contacts/)**
  - Increase mitigation in the building walls (only effective if no outdoor, noise sensitive areas)
  - Reconfigure the site plan to increase the distance between the noise source and noise-sensitive uses
  - Incorporate natural or man-made barriers.
  - Construct noise barrier. See the **Barrier Performance Module (/programs/environmental-review/bpm-calculator/)**

Day/Night Noise Level Assessment Tool User Guide (/resource/3822/day-night-noise-level-assessment-tool-user-guide/)

Day/Night Noise Level Assessment Tool Flowcharts (/resource/3823/day-night-noise-level-assessment-tool-flowcharts/)

Federal Railroad Administration Railroad Operations Data Sources (https://www.hudexchange.info/resource/6027/federal-railroad-administration-railroad-operations-data-sources/)

Day/Night Noise Level (DNL) Calculator

The Day/Night Noise Level Calculator is an electronic assessment tool that calculates the Day/Night Noise Level (DNL) from roadway and railway traffic. For more information on using the DNL calculator, view the **Day/Night Noise Level Calculator Electronic Assessment Tool Overview (/programs/environmental-review/daynight-noise-level-electronic-assessment-tool/)**.

Guidelines

- To display the Road and/or Rail DNL calculator(s), click on the "Add Road Source" and/or "Add Rail Source" button(s) below.
- All Road and Rail input values must be positive non-decimal numbers.
- All Road and/or Rail DNL value(s) must be calculated separately before calculating the Site DNL.
- All checkboxes that apply must be checked for vehicles and trains in the tables' headers.
- **Note #1:** Tooltips, containing field specific information, have been added in this tool and may be accessed by hovering over all the respective data fields (site identification, roadway and railway assessment, DNL calculation results, roadway and railway input variables) with the mouse.
- **Note #2:** DNL Calculator assumes roadway data is always entered.

DNL Calculator

Site ID	NAL4_No Build_Residences to the south along Anania Dr.
Record Date	11 / 05 / 2025
User's Name	Karen To

Road # 1 Name:	**Meheula Pkwy. from church driveway to Anania Dr.**

Vehicle Type	Cars ☑	Medium Trucks ☑	Heavy Trucks ☑
Effective Distance	155	155	155
Distance to Stop Sign			
Average Speed	25	25	25
Average Daily Trips (ADT)	11613	119	119
Night Fraction of ADT	15	15	15
Road Gradient (%)			2
Vehicle DNL	54	44	58
Calculate Road #1 DNL	59	Reset	

Road # 2 Name:	**Anania Dr. south of Meheula Pkwy.**

Road #2

Vehicle Type	Cars ☑	Medium Trucks ☑	Heavy Trucks ☑
Effective Distance	40	40	40
Distance to Stop Sign			
Average Speed	25	25	25
Average Daily Trips (ADT)	3038	31	31
Night Fraction of ADT	15	15	15
Road Gradient (%)			2
Vehicle DNL	57	47	61

Add Road Source Add Rail Source	
Airport Noise Level	55
Loud Impulse Sounds?	○ **Yes** ◉ **No**
Combined DNL for all Road and Rail sources	**64**
Combined DNL including Airport	**65**
Site DNL with Loud Impulse Sound	

Calculate Reset

Mitigation Options

If your site DNL is in Excess of 65 decibels, your options are:

- **No Action Alternative**: Cancel the project at this location
- **Other Reasonable Alternatives**: Choose an alternate site
- **Mitigation**
  - **Contact your Field or Regional Environmental Officer (/programs/environmental-review/hud-environmental-staff-contacts/)**
  - Increase mitigation in the building walls (only effective if no outdoor, noise sensitive areas)
  - Reconfigure the site plan to increase the distance between the noise source and noise-sensitive uses
  - Incorporate natural or man-made barriers.
  - Construct noise barrier. See the **Barrier Performance Module (/programs/environmental-review/bpm-calculator/)**

Day/Night Noise Level Assessment Tool User Guide (/resource/3822/day-night-noise-level-assessment-tool-user-guide/)

Day/Night Noise Level Assessment Tool Flowcharts (/resource/3823/day-night-noise-level-assessment-tool-flowcharts/)

Federal Railroad Administration Railroad Operations Data Sources (https://www.hudexchange.info/resource/6027/federal-railroad-administration-railroad-operations-data-sources/)

Day/Night Noise Level (DNL) Calculator

The Day/Night Noise Level Calculator is an electronic assessment tool that calculates the Day/Night Noise Level (DNL) from roadway and railway traffic. For more information on using the DNL calculator, view the **Day/Night Noise Level Calculator Electronic Assessment Tool Overview (/programs/environmental-review/daynight-noise-level-electronic-assessment-tool/)**.

Guidelines

- To display the Road and/or Rail DNL calculator(s), click on the "Add Road Source" and/or "Add Rail Source" button(s) below.
- All Road and Rail input values must be positive non-decimal numbers.
- All Road and/or Rail DNL value(s) must be calculated separately before calculating the Site DNL.
- All checkboxes that apply must be checked for vehicles and trains in the tables' headers.
- **Note #1:** Tooltips, containing field specific information, have been added in this tool and may be accessed by hovering over all the respective data fields (site identification, roadway and railway assessment, DNL calculation results, roadway and railway input variables) with the mouse.
- **Note #2:** DNL Calculator assumes roadway data is always entered.

DNL Calculator

Site ID	NAL5_Build_Residences to the southeast along Meheula Pkwy.
Record Date	11 / 05 / 2025
User's Name	Karen To

Road # 1 Name:	**Meheula Pkwy. From Anania Dr. to Makaimoimo St.**

Vehicle Type	Cars ☑	Medium Trucks ☑	Heavy Trucks ☑
Effective Distance	55	55	55
Distance to Stop Sign			
Average Speed	25	25	25
Average Daily Trips (ADT)	11985	122	122
Night Fraction of ADT	15	15	15
Road Gradient (%)			2
Vehicle DNL	61	51	64
Calculate Road #1 DNL	66	Reset	

Add Road Source | Add Rail Source

Airport Noise Level	55
Loud Impulse Sounds?	○ **Yes** ◉ **No**
Combined DNL for all Road and Rail sources	**66**
Combined DNL including Airport	**67**
Site DNL with Loud Impulse Sound	

Calculate | Reset

Mitigation Options

If your site DNL is in Excess of 65 decibels, your options are:

- **No Action Alternative**: Cancel the project at this location
- **Other Reasonable Alternatives**: Choose an alternate site
- **Mitigation**
    - **Contact your Field or Regional Environmental Officer (/programs/environmental-review/hud-environmental-staff-contacts/)**
    - Increase mitigation in the building walls (only effective if no outdoor, noise sensitive areas)
    - Reconfigure the site plan to increase the distance between the noise source and noise-sensitive uses
    - Incorporate natural or man-made barriers.
    - Construct noise barrier. See the **Barrier Performance Module (/programs/environmental-review/bpm-calculator/)**

Tools and Guidance

Day/Night Noise Level Assessment Tool User Guide (/resource/3822/day-night-noise-level-assessment-tool-user-guide/)

Day/Night Noise Level Assessment Tool Flowcharts (/resource/3823/day-night-noise-level-assessment-tool-flowcharts/)

Federal Railroad Administration Railroad Operations Data Sources (https://www.hudexchange.info/resource/6027/federal-railroad-administration-railroad-operations-data-sources/)

Day/Night Noise Level (DNL) Calculator

The Day/Night Noise Level Calculator is an electronic assessment tool that calculates the Day/Night Noise Level (DNL) from roadway and railway traffic. For more information on using the DNL calculator, view the **Day/Night Noise Level Calculator Electronic Assessment Tool Overview (/programs/environmental-review/daynight-noise-level-electronic-assessment-tool/)**.

Guidelines

- To display the Road and/or Rail DNL calculator(s), click on the "Add Road Source" and/or "Add Rail Source" button(s) below.
- All Road and Rail input values must be positive non-decimal numbers.
- All Road and/or Rail DNL value(s) must be calculated separately before calculating the Site DNL.
- All checkboxes that apply must be checked for vehicles and trains in the tables' headers.
- **Note #1:** Tooltips, containing field specific information, have been added in this tool and may be accessed by hovering over all the respective data fields (site identification, roadway and railway assessment, DNL calculation results, roadway and railway input variables) with the mouse.
- **Note #2:** DNL Calculator assumes roadway data is always entered.

DNL Calculator

Site ID	NAL5_Existing_Residences to the southeast along Meheula Pkwy.
Record Date	11 / 05 / 2025
User's Name	Karen To

Road # 1 Name:	**Meheula Pkwy. From Anania Dr. to Makaimoimo St.**

Vehicle Type	Cars ☑	Medium Trucks ☑	Heavy Trucks ☑
Effective Distance	55	55	55
Distance to Stop Sign			
Average Speed	25	25	25
Average Daily Trips (ADT)	11299	115	115
Night Fraction of ADT	15	15	15
Road Gradient (%)			2
Vehicle DNL	61	51	64
Calculate Road #1 DNL	66	Reset	

Add Road Source | Add Rail Source

Airport Noise Level	55
Loud Impulse Sounds?	○ **Yes** ◉ **No**
Combined DNL for all Road and Rail sources	**66**
Combined DNL including Airport	**66**
Site DNL with Loud Impulse Sound	

Calculate | Reset

Mitigation Options

If your site DNL is in Excess of 65 decibels, your options are:

- **No Action Alternative**: Cancel the project at this location
- **Other Reasonable Alternatives**: Choose an alternate site
- **Mitigation**
    - **Contact your Field or Regional Environmental Officer (/programs/environmental-review/hud-environmental-staff-contacts/)**
    - Increase mitigation in the building walls (only effective if no outdoor, noise sensitive areas)
    - Reconfigure the site plan to increase the distance between the noise source and noise-sensitive uses
    - Incorporate natural or man-made barriers.
    - Construct noise barrier. See the **Barrier Performance Module (/programs/environmental-review/bpm-calculator/)**

Tools and Guidance

Day/Night Noise Level Assessment Tool User Guide (/resource/3822/day-night-noise-level-assessment-tool-user-guide/)

Day/Night Noise Level Assessment Tool Flowcharts (/resource/3823/day-night-noise-level-assessment-tool-flowcharts/)

Federal Railroad Administration Railroad Operations Data Sources (https://www.hudexchange.info/resource/6027/federal-railroad-administration-railroad-operations-data-sources/)

Day/Night Noise Level (DNL) Calculator

The Day/Night Noise Level Calculator is an electronic assessment tool that calculates the Day/Night Noise Level (DNL) from roadway and railway traffic. For more information on using the DNL calculator, view the **Day/Night Noise Level Calculator Electronic Assessment Tool Overview (/programs/environmental-review/daynight-noise-level-electronic-assessment-tool/)**.

Guidelines

- To display the Road and/or Rail DNL calculator(s), click on the "Add Road Source" and/or "Add Rail Source" button(s) below.
- All Road and Rail input values must be positive non-decimal numbers.
- All Road and/or Rail DNL value(s) must be calculated separately before calculating the Site DNL.
- All checkboxes that apply must be checked for vehicles and trains in the tables' headers.
- **Note #1:** Tooltips, containing field specific information, have been added in this tool and may be accessed by hovering over all the respective data fields (site identification, roadway and railway assessment, DNL calculation results, roadway and railway input variables) with the mouse.
- **Note #2:** DNL Calculator assumes roadway data is always entered.

DNL Calculator

Site ID	NAL5_No Build_Residences to the southeast along Meheula Pkwy.
Record Date	11 / 05 / 2025
User's Name	Karen To

Road # 1 Name:	**Meheula Pkwy. From Anania Dr. to Makaimoimo St.**

Vehicle Type	Cars ☑	Medium Trucks ☑	Heavy Trucks ☑
Effective Distance	55	55	55
Distance to Stop Sign			
Average Speed	25	25	25
Average Daily Trips (ADT)	11711	120	120
Night Fraction of ADT	15	15	15
Road Gradient (%)			2
Vehicle DNL	61	51	64
Calculate Road #1 DNL	66	Reset	

Add Road Source | Add Rail Source

Airport Noise Level	55
Loud Impulse Sounds?	○ **Yes** ◉ **No**
Combined DNL for all Road and Rail sources	**66**
Combined DNL including Airport	**67**
Site DNL with Loud Impulse Sound	

Calculate | Reset

Mitigation Options

If your site DNL is in Excess of 65 decibels, your options are:

- **No Action Alternative**: Cancel the project at this location
- **Other Reasonable Alternatives**: Choose an alternate site
- **Mitigation**
    - **Contact your Field or Regional Environmental Officer (/programs/environmental-review/hud-environmental-staff-contacts/)**
    - Increase mitigation in the building walls (only effective if no outdoor, noise sensitive areas)
    - Reconfigure the site plan to increase the distance between the noise source and noise-sensitive uses
    - Incorporate natural or man-made barriers.
    - Construct noise barrier. See the **Barrier Performance Module (/programs/environmental-review/bpm-calculator/)**

Tools and Guidance

Day/Night Noise Level Assessment Tool User Guide (/resource/3822/day-night-noise-level-assessment-tool-user-guide/)

Day/Night Noise Level Assessment Tool Flowcharts (/resource/3823/day-night-noise-level-assessment-tool-flowcharts/)

Federal Railroad Administration Railroad Operations Data Sources (https://www.hudexchange.info/resource/6027/federal-railroad-administration-railroad-operations-data-sources/)

Day/Night Noise Level (DNL) Calculator

The Day/Night Noise Level Calculator is an electronic assessment tool that calculates the Day/Night Noise Level (DNL) from roadway and railway traffic. For more information on using the DNL calculator, view the **Day/Night Noise Level Calculator Electronic Assessment Tool Overview (/programs/environmental-review/daynight-noise-level-electronic-assessment-tool/)**.

Guidelines

- To display the Road and/or Rail DNL calculator(s), click on the "Add Road Source" and/or "Add Rail Source" button(s) below.
- All Road and Rail input values must be positive non-decimal numbers.
- All Road and/or Rail DNL value(s) must be calculated separately before calculating the Site DNL.
- All checkboxes that apply must be checked for vehicles and trains in the tables' headers.
- **Note #1:** Tooltips, containing field specific information, have been added in this tool and may be accessed by hovering over all the respective data fields (site identification, roadway and railway assessment, DNL calculation results, roadway and railway input variables) with the mouse.
- **Note #2:** DNL Calculator assumes roadway data is always entered.

DNL Calculator

Site ID	NAL6_Build_Miliani Public Library
Record Date	11 / 05 / 2025
User's Name	Karen To

Road # 1 Name:	**Meheula Pkwy. from Anania Dr. to Makaimoimo St.**

Vehicle Type	Cars ☑	Medium Trucks ☑	Heavy Trucks ☑
Effective Distance	120	120	120
Distance to Stop Sign			
Average Speed	25	25	25
Average Daily Trips (ADT)	15023	153	153
Night Fraction of ADT	15	15	15
Road Gradient (%)			2
Vehicle DNL	57	47	60
Calculate Road #1 DNL	62	Reset	

Road # 2 Name:	**Makaimoimo St. south of Meheula Pkwy.**

Road #2

Vehicle Type	Cars ☑	Medium Trucks ☑	Heavy Trucks ☑
Effective Distance	95	95	95
Distance to Stop Sign			
Average Speed	25	25	25
Average Daily Trips (ADT)	7644	78	78
Night Fraction of ADT	15	15	15
Road Gradient (%)			2
Vehicle DNL	56	46	59

Calculate Road #2 DNL | 64 | Reset

Add Road Source | Add Rail Source

Airport Noise Level	55
Loud Impulse Sounds?	○ Yes ◉ No
Combined DNL for all Road and Rail sources	**65**
Combined DNL including Airport	**65**
Site DNL with Loud Impulse Sound	

Calculate | Reset

Mitigation Options

If your site DNL is in Excess of 65 decibels, your options are:

- **No Action Alternative**: Cancel the project at this location
- **Other Reasonable Alternatives**: Choose an alternate site
- **Mitigation**
  - **Contact your Field or Regional Environmental Officer (/programs/environmental-review/hud-environmental-staff-contacts/)**
  - Increase mitigation in the building walls (only effective if no outdoor, noise sensitive areas)
  - Reconfigure the site plan to increase the distance between the noise source and noise-sensitive uses
  - Incorporate natural or man-made barriers.
  - Construct noise barrier. See the **Barrier Performance Module (/programs/environmental-review/bpm-calculator/)**

Day/Night Noise Level Assessment Tool User Guide (/resource/3822/day-night-noise-level-assessment-tool-user-guide/)

Day/Night Noise Level Assessment Tool Flowcharts (/resource/3823/day-night-noise-level-assessment-tool-flowcharts/)

Federal Railroad Administration Railroad Operations Data Sources (https://www.hudexchange.info/resource/6027/federal-railroad-administration-railroad-operations-data-sources/)

Day/Night Noise Level (DNL) Calculator

The Day/Night Noise Level Calculator is an electronic assessment tool that calculates the Day/Night Noise Level (DNL) from roadway and railway traffic. For more information on using the DNL calculator, view the **Day/Night Noise Level Calculator Electronic Assessment Tool Overview (/programs/environmental-review/daynight-noise-level-electronic-assessment-tool/)**.

Guidelines

- To display the Road and/or Rail DNL calculator(s), click on the "Add Road Source" and/or "Add Rail Source" button(s) below.
- All Road and Rail input values must be positive non-decimal numbers.
- All Road and/or Rail DNL value(s) must be calculated separately before calculating the Site DNL.
- All checkboxes that apply must be checked for vehicles and trains in the tables' headers.
- **Note #1:** Tooltips, containing field specific information, have been added in this tool and may be accessed by hovering over all the respective data fields (site identification, roadway and railway assessment, DNL calculation results, roadway and railway input variables) with the mouse.
- **Note #2:** DNL Calculator assumes roadway data is always entered.

DNL Calculator

Site ID	NAL6_Existing_Miliani Public Library
Record Date	11 / 05 / 2025
User's Name	Karen To

Road # 1 Name:	**Meheula Pkwy. from Anania Dr. to Makaimoimo St.**

Vehicle Type	Cars ☑	Medium Trucks ☑	Heavy Trucks ☑
Effective Distance	120	120	120
Distance to Stop Sign			
Average Speed	25	25	25
Average Daily Trips (ADT)	14259	146	146
Night Fraction of ADT	15	15	15
Road Gradient (%)			2
Vehicle DNL	57	47	60
Calculate Road #1 DNL	62	Reset	

Road # 2 Name:	**Makaimoimo St. south of Meheula Pkwy.**

Road #2

Vehicle Type	Cars ☑	Medium Trucks ☑	Heavy Trucks ☑
Effective Distance	95	95	95
Distance to Stop Sign			
Average Speed	25	25	25
Average Daily Trips (ADT)	7330	75	75
Night Fraction of ADT	15	15	15
Road Gradient (%)			2
Vehicle DNL	55	45	59

Calculate Road #2 DNL | 64 | Reset

Add Road Source | Add Rail Source

Airport Noise Level	55
Loud Impulse Sounds?	○ Yes ◉ No
Combined DNL for all Road and Rail sources	**64**
Combined DNL including Airport	**65**
Site DNL with Loud Impulse Sound	

Calculate | Reset

Mitigation Options

If your site DNL is in Excess of 65 decibels, your options are:

- **No Action Alternative**: Cancel the project at this location
- **Other Reasonable Alternatives**: Choose an alternate site
- **Mitigation**
  - **Contact your Field or Regional Environmental Officer (/programs/environmental-review/hud-environmental-staff-contacts/)**
  - Increase mitigation in the building walls (only effective if no outdoor, noise sensitive areas)
  - Reconfigure the site plan to increase the distance between the noise source and noise-sensitive uses
  - Incorporate natural or man-made barriers.
  - Construct noise barrier. See the **Barrier Performance Module (/programs/environmental-review/bpm-calculator/)**

Day/Night Noise Level Assessment Tool User Guide (/resource/3822/day-night-noise-level-assessment-tool-user-guide/)

Day/Night Noise Level Assessment Tool Flowcharts (/resource/3823/day-night-noise-level-assessment-tool-flowcharts/)

Federal Railroad Administration Railroad Operations Data Sources (https://www.hudexchange.info/resource/6027/federal-railroad-administration-railroad-operations-data-sources/)

Day/Night Noise Level (DNL) Calculator

The Day/Night Noise Level Calculator is an electronic assessment tool that calculates the Day/Night Noise Level (DNL) from roadway and railway traffic. For more information on using the DNL calculator, view the **Day/Night Noise Level Calculator Electronic Assessment Tool Overview (/programs/environmental-review/daynight-noise-level-electronic-assessment-tool/)**.

Guidelines

- To display the Road and/or Rail DNL calculator(s), click on the "Add Road Source" and/or "Add Rail Source" button(s) below.
- All Road and Rail input values must be positive non-decimal numbers.
- All Road and/or Rail DNL value(s) must be calculated separately before calculating the Site DNL.
- All checkboxes that apply must be checked for vehicles and trains in the tables' headers.
- **Note #1:** Tooltips, containing field specific information, have been added in this tool and may be accessed by hovering over all the respective data fields (site identification, roadway and railway assessment, DNL calculation results, roadway and railway input variables) with the mouse.
- **Note #2:** DNL Calculator assumes roadway data is always entered.

DNL Calculator

Site ID	NAL6_No Build_Miliani Public Library
Record Date	11 / 05 / 2025
User's Name	Karen To

Road # 1 Name:	**Meheula Pkwy. from Anania Dr. to Makaimoimo St.**

Vehicle Type	Cars ☑	Medium Trucks ☑	Heavy Trucks ☑
Effective Distance	120	120	120
Distance to Stop Sign			
Average Speed	25	25	25
Average Daily Trips (ADT)	14749	151	151
Night Fraction of ADT	15	15	15
Road Gradient (%)			2
Vehicle DNL	57	47	60
Calculate Road #1 DNL	62	Reset	

Road # 2 Name: **Makaimoimo St. south of Meheula Pkwy.**

Road #2

Vehicle Type	Cars ☑	Medium Trucks ☑	Heavy Trucks ☑
Effective Distance	95	95	95
Distance to Stop Sign			
Average Speed	25	25	25
Average Daily Trips (ADT)	7644	78	78
Night Fraction of ADT	15	15	15
Road Gradient (%)			2
Vehicle DNL	56	46	59

Calculate Road #2 DNL | 64 | Reset

Add Road Source | Add Rail Source

Airport Noise Level	55
Loud Impulse Sounds?	○ Yes ◉ No
Combined DNL for all Road and Rail sources	**64**
Combined DNL including Airport	**65**
Site DNL with Loud Impulse Sound	

Calculate | Reset

Mitigation Options

If your site DNL is in Excess of 65 decibels, your options are:

- **No Action Alternative**: Cancel the project at this location
- **Other Reasonable Alternatives**: Choose an alternate site
- **Mitigation**
  - **Contact your Field or Regional Environmental Officer (/programs/environmental-review/hud-environmental-staff-contacts/)**
  - Increase mitigation in the building walls (only effective if no outdoor, noise sensitive areas)
  - Reconfigure the site plan to increase the distance between the noise source and noise-sensitive uses
  - Incorporate natural or man-made barriers.
  - Construct noise barrier. See the **Barrier Performance Module (/programs/environmental-review/bpm-calculator/)**

Day/Night Noise Level Assessment Tool User Guide (/resource/3822/day-night-noise-level-assessment-tool-user-guide/)

Day/Night Noise Level Assessment Tool Flowcharts (/resource/3823/day-night-noise-level-assessment-tool-flowcharts/)

Federal Railroad Administration Railroad Operations Data Sources (https://www.hudexchange.info/resource/6027/federal-railroad-administration-railroad-operations-data-sources/)

Day/Night Noise Level (DNL) Calculator

The Day/Night Noise Level Calculator is an electronic assessment tool that calculates the Day/Night Noise Level (DNL) from roadway and railway traffic. For more information on using the DNL calculator, view the **Day/Night Noise Level Calculator Electronic Assessment Tool Overview (/programs/environmental-review/daynight-noise-level-electronic-assessment-tool/)**.

Guidelines

- To display the Road and/or Rail DNL calculator(s), click on the "Add Road Source" and/or "Add Rail Source" button(s) below.
- All Road and Rail input values must be positive non-decimal numbers.
- All Road and/or Rail DNL value(s) must be calculated separately before calculating the Site DNL.
- All checkboxes that apply must be checked for vehicles and trains in the tables' headers.
- **Note #1:** Tooltips, containing field specific information, have been added in this tool and may be accessed by hovering over all the respective data fields (site identification, roadway and railway assessment, DNL calculation results, roadway and railway input variables) with the mouse.
- **Note #2:** DNL Calculator assumes roadway data is always entered.

DNL Calculator

Site ID	NAL7_Build_Residences north of Hookelewaa St.
Record Date	11 / 05 / 2025
User's Name	Karen To

Road # 1 Name:	**Hookelewaa St. west of Meheula Pkwy.**

Vehicle Type	Cars ☑	Medium Trucks ☑	Heavy Trucks ☑
Effective Distance	35	35	35
Distance to Stop Sign			
Average Speed	25	25	25
Average Daily Trips (ADT)	6350	65	65
Night Fraction of ADT	15	15	15
Road Gradient (%)			2
Vehicle DNL	61	51	65
Calculate Road #1 DNL	66	Reset	

Road # 2 Name:	**Meheula Pkwy. north of Hookelewaa St.**

Road #2

Vehicle Type	Cars ☑	Medium Trucks ☑	Heavy Trucks ☑
Effective Distance	65	65	65
Distance to Stop Sign			
Average Speed	25	25	25
Average Daily Trips (ADT)	28067	286	286
Night Fraction of ADT	15	15	15
Road Gradient (%)			2
Vehicle DNL	64	54	67

Add Road Source Add Rail Source	
Airport Noise Level	55
Loud Impulse Sounds?	○ **Yes** ◉ **No**
Combined DNL for all Road and Rail sources	**71**
Combined DNL including Airport	**71**
Site DNL with Loud Impulse Sound	

Calculate Reset

Mitigation Options

If your site DNL is in Excess of 65 decibels, your options are:

- **No Action Alternative**: Cancel the project at this location
- **Other Reasonable Alternatives**: Choose an alternate site
- **Mitigation**
  - **Contact your Field or Regional Environmental Officer (/programs/environmental-review/hud-environmental-staff-contacts/)**
  - Increase mitigation in the building walls (only effective if no outdoor, noise sensitive areas)
  - Reconfigure the site plan to increase the distance between the noise source and noise-sensitive uses
  - Incorporate natural or man-made barriers.
  - Construct noise barrier. See the **Barrier Performance Module (/programs/environmental-review/bpm-calculator/)**

Day/Night Noise Level Assessment Tool User Guide (/resource/3822/day-night-noise-level-assessment-tool-user-guide/)

Day/Night Noise Level Assessment Tool Flowcharts (/resource/3823/day-night-noise-level-assessment-tool-flowcharts/)

Federal Railroad Administration Railroad Operations Data Sources (https://www.hudexchange.info/resource/6027/federal-railroad-administration-railroad-operations-data-sources/)

Day/Night Noise Level (DNL) Calculator

The Day/Night Noise Level Calculator is an electronic assessment tool that calculates the Day/Night Noise Level (DNL) from roadway and railway traffic. For more information on using the DNL calculator, view the **Day/Night Noise Level Calculator Electronic Assessment Tool Overview (/programs/environmental-review/daynight-noise-level-electronic-assessment-tool/)**.

Guidelines

- To display the Road and/or Rail DNL calculator(s), click on the "Add Road Source" and/or "Add Rail Source" button(s) below.
- All Road and Rail input values must be positive non-decimal numbers.
- All Road and/or Rail DNL value(s) must be calculated separately before calculating the Site DNL.
- All checkboxes that apply must be checked for vehicles and trains in the tables' headers.
- **Note #1:** Tooltips, containing field specific information, have been added in this tool and may be accessed by hovering over all the respective data fields (site identification, roadway and railway assessment, DNL calculation results, roadway and railway input variables) with the mouse.
- **Note #2:** DNL Calculator assumes roadway data is always entered.

DNL Calculator

Site ID	NAL7_Existing_Residences north of Hookelewaa St.
Record Date	11 / 05 / 2025
User's Name	Karen To

Road # 1 Name:	**Hookelewaa St. west of Meheula Pkwy.**

Vehicle Type	Cars ☑	Medium Trucks ☑	Heavy Trucks ☑
Effective Distance	35	35	35
Distance to Stop Sign			
Average Speed	25	25	25
Average Daily Trips (ADT)	5958	61	61
Night Fraction of ADT	15	15	15
Road Gradient (%)			2
Vehicle DNL	61	51	64
Calculate Road #1 DNL	66	Reset	

Road # 2 Name: **Meheula Pkwy. north of Hookelewaa St.**

Road #2

Vehicle Type	Cars ☑	Medium Trucks ☑	Heavy Trucks ☑
Effective Distance	65	65	65
Distance to Stop Sign			
Average Speed	25	25	25
Average Daily Trips (ADT)	26901	275	275
Night Fraction of ADT	15	15	15
Road Gradient (%)			2
Vehicle DNL	63	54	67

Add Road Source Add Rail Source	
Airport Noise Level	55
Loud Impulse Sounds?	○ **Yes** ◉ **No**
Combined DNL for all Road and Rail sources	**71**
Combined DNL including Airport	**71**
Site DNL with Loud Impulse Sound	

Calculate Reset

Mitigation Options

If your site DNL is in Excess of 65 decibels, your options are:

- **No Action Alternative**: Cancel the project at this location
- **Other Reasonable Alternatives**: Choose an alternate site
- **Mitigation**
  - **Contact your Field or Regional Environmental Officer (/programs/environmental-review/hud-environmental-staff-contacts/)**
  - Increase mitigation in the building walls (only effective if no outdoor, noise sensitive areas)
  - Reconfigure the site plan to increase the distance between the noise source and noise-sensitive uses
  - Incorporate natural or man-made barriers.
  - Construct noise barrier. See the **Barrier Performance Module (/programs/environmental-review/bpm-calculator/)**

Day/Night Noise Level Assessment Tool User Guide (/resource/3822/day-night-noise-level-assessment-tool-user-guide/)

Day/Night Noise Level Assessment Tool Flowcharts (/resource/3823/day-night-noise-level-assessment-tool-flowcharts/)

Federal Railroad Administration Railroad Operations Data Sources (https://www.hudexchange.info/resource/6027/federal-railroad-administration-railroad-operations-data-sources/)

Day/Night Noise Level (DNL) Calculator

The Day/Night Noise Level Calculator is an electronic assessment tool that calculates the Day/Night Noise Level (DNL) from roadway and railway traffic. For more information on using the DNL calculator, view the **Day/Night Noise Level Calculator Electronic Assessment Tool Overview (/programs/environmental-review/daynight-noise-level-electronic-assessment-tool/)**.

Guidelines

- To display the Road and/or Rail DNL calculator(s), click on the "Add Road Source" and/or "Add Rail Source" button(s) below.
- All Road and Rail input values must be positive non-decimal numbers.
- All Road and/or Rail DNL value(s) must be calculated separately before calculating the Site DNL.
- All checkboxes that apply must be checked for vehicles and trains in the tables' headers.
- **Note #1:** Tooltips, containing field specific information, have been added in this tool and may be accessed by hovering over all the respective data fields (site identification, roadway and railway assessment, DNL calculation results, roadway and railway input variables) with the mouse.
- **Note #2:** DNL Calculator assumes roadway data is always entered.

DNL Calculator

Site ID	NAL7_No Build_Residences north of Hookelewaa St.
Record Date	11 / 05 / 2025
User's Name	Karen To

Road # 1 Name:	**Hookelewaa St. west of Meheula Pkwy.**

Vehicle Type	Cars ☑	Medium Trucks ☑	Heavy Trucks ☑
Effective Distance	35	35	35
Distance to Stop Sign			
Average Speed	25	25	25
Average Daily Trips (ADT)	6321	65	65
Night Fraction of ADT	15	15	15
Road Gradient (%)			2
Vehicle DNL	61	51	65
Calculate Road #1 DNL	66	Reset	

Road # 2 Name: **Meheula Pkwy. north of Hookelewaa St.**

Road #2

Vehicle Type	Cars ☑	Medium Trucks ☑	Heavy Trucks ☑
Effective Distance	65	65	65
Distance to Stop Sign			
Average Speed	25	25	25
Average Daily Trips (ADT)	27832	284	284
Night Fraction of ADT	15	15	15
Road Gradient (%)			2
Vehicle DNL	64	54	67

Add Road Source Add Rail Source	
Airport Noise Level	55
Loud Impulse Sounds?	○ **Yes** ◉ **No**
Combined DNL for all Road and Rail sources	**71**
Combined DNL including Airport	**71**
Site DNL with Loud Impulse Sound	

Calculate Reset

Mitigation Options

If your site DNL is in Excess of 65 decibels, your options are:

- **No Action Alternative**: Cancel the project at this location
- **Other Reasonable Alternatives**: Choose an alternate site
- **Mitigation**
  - **Contact your Field or Regional Environmental Officer (/programs/environmental-review/hud-environmental-staff-contacts/)**
  - Increase mitigation in the building walls (only effective if no outdoor, noise sensitive areas)
  - Reconfigure the site plan to increase the distance between the noise source and noise-sensitive uses
  - Incorporate natural or man-made barriers.
  - Construct noise barrier. See the **Barrier Performance Module (/programs/environmental-review/bpm-calculator/)**

Day/Night Noise Level Assessment Tool User Guide (/resource/3822/day-night-noise-level-assessment-tool-user-guide/)

Day/Night Noise Level Assessment Tool Flowcharts (/resource/3823/day-night-noise-level-assessment-tool-flowcharts/)

Federal Railroad Administration Railroad Operations Data Sources (https://www.hudexchange.info/resource/6027/federal-railroad-administration-railroad-operations-data-sources/)

Day/Night Noise Level (DNL) Calculator

The Day/Night Noise Level Calculator is an electronic assessment tool that calculates the Day/Night Noise Level (DNL) from roadway and railway traffic. For more information on using the DNL calculator, view the **Day/Night Noise Level Calculator Electronic Assessment Tool Overview (/programs/environmental-review/daynight-noise-level-electronic-assessment-tool/)**.

Guidelines

- To display the Road and/or Rail DNL calculator(s), click on the "Add Road Source" and/or "Add Rail Source" button(s) below.
- All Road and Rail input values must be positive non-decimal numbers.
- All Road and/or Rail DNL value(s) must be calculated separately before calculating the Site DNL.
- All checkboxes that apply must be checked for vehicles and trains in the tables' headers.
- **Note #1:** Tooltips, containing field specific information, have been added in this tool and may be accessed by hovering over all the respective data fields (site identification, roadway and railway assessment, DNL calculation results, roadway and railway input variables) with the mouse.
- **Note #2:** DNL Calculator assumes roadway data is always entered.

DNL Calculator

Site ID	NAL8_Build_Rainbow School
Record Date	11 / 05 / 2025
User's Name	Karen To

Road # 1 Name:	**Lanikuhana Ave. east of Meheula Pkwy.**

Vehicle Type	Cars ☑	Medium Trucks ☑	Heavy Trucks ☑
Effective Distance	55	55	55
Distance to Stop Sign			
Average Speed	25	25	25
Average Daily Trips (ADT)	14563	149	149
Night Fraction of ADT	15	15	15
Road Gradient (%)			2
Vehicle DNL	62	52	65
Calculate Road #1 DNL	67	Reset	

Road # 2 Name:	**Meheula Pkwy. north of Lanikuhana Ave.**

Road #2

Vehicle Type	Cars ☑	Medium Trucks ☑	Heavy Trucks ☑
Effective Distance	65	65	65
Distance to Stop Sign			
Average Speed	25	25	25
Average Daily Trips (ADT)	28067	286	286
Night Fraction of ADT	15	15	15
Road Gradient (%)			2
Vehicle DNL	64	54	67

Add Road Source Add Rail Source	
Airport Noise Level	55
Loud Impulse Sounds?	○ **Yes** ◉ **No**
Combined DNL for all Road and Rail sources	**71**
Combined DNL including Airport	**71**
Site DNL with Loud Impulse Sound	

Calculate Reset

Mitigation Options

If your site DNL is in Excess of 65 decibels, your options are:

- **No Action Alternative**: Cancel the project at this location
- **Other Reasonable Alternatives**: Choose an alternate site
- **Mitigation**
  - **Contact your Field or Regional Environmental Officer (/programs/environmental-review/hud-environmental-staff-contacts/)**
  - Increase mitigation in the building walls (only effective if no outdoor, noise sensitive areas)
  - Reconfigure the site plan to increase the distance between the noise source and noise-sensitive uses
  - Incorporate natural or man-made barriers.
  - Construct noise barrier. See the **Barrier Performance Module (/programs/environmental-review/bpm-calculator/)**

Day/Night Noise Level Assessment Tool User Guide (/resource/3822/day-night-noise-level-assessment-tool-user-guide/)

Day/Night Noise Level Assessment Tool Flowcharts (/resource/3823/day-night-noise-level-assessment-tool-flowcharts/)

Federal Railroad Administration Railroad Operations Data Sources (https://www.hudexchange.info/resource/6027/federal-railroad-administration-railroad-operations-data-sources/)

Day/Night Noise Level (DNL) Calculator

The Day/Night Noise Level Calculator is an electronic assessment tool that calculates the Day/Night Noise Level (DNL) from roadway and railway traffic. For more information on using the DNL calculator, view the **Day/Night Noise Level Calculator Electronic Assessment Tool Overview (/programs/environmental-review/daynight-noise-level-electronic-assessment-tool/)**.

Guidelines

- To display the Road and/or Rail DNL calculator(s), click on the "Add Road Source" and/or "Add Rail Source" button(s) below.
- All Road and Rail input values must be positive non-decimal numbers.
- All Road and/or Rail DNL value(s) must be calculated separately before calculating the Site DNL.
- All checkboxes that apply must be checked for vehicles and trains in the tables' headers.
- **Note #1:** Tooltips, containing field specific information, have been added in this tool and may be accessed by hovering over all the respective data fields (site identification, roadway and railway assessment, DNL calculation results, roadway and railway input variables) with the mouse.
- **Note #2:** DNL Calculator assumes roadway data is always entered.

DNL Calculator

Site ID	NAL8_Existing_Rainbow School
Record Date	11 / 05 / 2025
User's Name	Karen To

Road # 1 Name:	**Lanikuhana Ave. east of Meheula Pkwy.**

Vehicle Type	Cars ☑	Medium Trucks ☑	Heavy Trucks ☑
Effective Distance	55	55	55
Distance to Stop Sign			
Average Speed	25	25	25
Average Daily Trips (ADT)	14014	143	143
Night Fraction of ADT	15	15	15
Road Gradient (%)			2
Vehicle DNL	62	52	65
Calculate Road #1 DNL	67	Reset	

Road # 2 Name: **Meheula Pkwy. north of Lanikuhana Ave.**

Road #2

Vehicle Type	Cars ☑	Medium Trucks ☑	Heavy Trucks ☑
Effective Distance	65	65	65
Distance to Stop Sign			
Average Speed	25	25	25
Average Daily Trips (ADT)	26901	275	275
Night Fraction of ADT	15	15	15
Road Gradient (%)			2
Vehicle DNL	63	54	67

Add Road Source Add Rail Source	
Airport Noise Level	55
Loud Impulse Sounds?	○ **Yes** ◉ **No**
Combined DNL for all Road and Rail sources	**71**
Combined DNL including Airport	**71**
Site DNL with Loud Impulse Sound	

Calculate Reset

Mitigation Options

If your site DNL is in Excess of 65 decibels, your options are:

- **No Action Alternative**: Cancel the project at this location
- **Other Reasonable Alternatives**: Choose an alternate site
- **Mitigation**
  - **Contact your Field or Regional Environmental Officer (/programs/environmental-review/hud-environmental-staff-contacts/)**
  - Increase mitigation in the building walls (only effective if no outdoor, noise sensitive areas)
  - Reconfigure the site plan to increase the distance between the noise source and noise-sensitive uses
  - Incorporate natural or man-made barriers.
  - Construct noise barrier. See the **Barrier Performance Module (/programs/environmental-review/bpm-calculator/)**

Day/Night Noise Level Assessment Tool User Guide (/resource/3822/day-night-noise-level-assessment-tool-user-guide/)

Day/Night Noise Level Assessment Tool Flowcharts (/resource/3823/day-night-noise-level-assessment-tool-flowcharts/)

Federal Railroad Administration Railroad Operations Data Sources (https://www.hudexchange.info/resource/6027/federal-railroad-administration-railroad-operations-data-sources/)

Day/Night Noise Level (DNL) Calculator

The Day/Night Noise Level Calculator is an electronic assessment tool that calculates the Day/Night Noise Level (DNL) from roadway and railway traffic. For more information on using the DNL calculator, view the **Day/Night Noise Level Calculator Electronic Assessment Tool Overview (/programs/environmental-review/daynight-noise-level-electronic-assessment-tool/)**.

Guidelines

- To display the Road and/or Rail DNL calculator(s), click on the "Add Road Source" and/or "Add Rail Source" button(s) below.
- All Road and Rail input values must be positive non-decimal numbers.
- All Road and/or Rail DNL value(s) must be calculated separately before calculating the Site DNL.
- All checkboxes that apply must be checked for vehicles and trains in the tables' headers.
- **Note #1:** Tooltips, containing field specific information, have been added in this tool and may be accessed by hovering over all the respective data fields (site identification, roadway and railway assessment, DNL calculation results, roadway and railway input variables) with the mouse.
- **Note #2:** DNL Calculator assumes roadway data is always entered.

DNL Calculator

Site ID	NAL8_No Build_Rainbow School
Record Date	11 / 05 / 2025
User's Name	Karen To

Road # 1 Name:	**Lanikuhana Ave. east of Meheula Pkwy.**

Vehicle Type	Cars ☑	Medium Trucks ☑	Heavy Trucks ☑
Effective Distance	55	55	55
Distance to Stop Sign			
Average Speed	25	25	25
Average Daily Trips (ADT)	14553	149	149
Night Fraction of ADT	15	15	15
Road Gradient (%)			2
Vehicle DNL	62	52	65
Calculate Road #1 DNL	67	Reset	

Road # 2 Name:	**Meheula Pkwy. north of Lanikuhana Ave.**

Road #2

Vehicle Type	Cars ☑	Medium Trucks ☑	Heavy Trucks ☑
Effective Distance	65	65	65
Distance to Stop Sign			
Average Speed	25	25	25
Average Daily Trips (ADT)	27832	284	284
Night Fraction of ADT	15	15	15
Road Gradient (%)			2
Vehicle DNL	64	54	67

Add Road Source Add Rail Source	
Airport Noise Level	55
Loud Impulse Sounds?	○ **Yes** ◉ **No**
Combined DNL for all Road and Rail sources	**71**
Combined DNL including Airport	**71**
Site DNL with Loud Impulse Sound	

Calculate Reset

Mitigation Options

If your site DNL is in Excess of 65 decibels, your options are:

- **No Action Alternative**: Cancel the project at this location
- **Other Reasonable Alternatives**: Choose an alternate site
- **Mitigation**
  - **Contact your Field or Regional Environmental Officer (/programs/environmental-review/hud-environmental-staff-contacts/)**
  - Increase mitigation in the building walls (only effective if no outdoor, noise sensitive areas)
  - Reconfigure the site plan to increase the distance between the noise source and noise-sensitive uses
  - Incorporate natural or man-made barriers.
  - Construct noise barrier. See the **Barrier Performance Module (/programs/environmental-review/bpm-calculator/)**

Day/Night Noise Level Assessment Tool User Guide (/resource/3822/day-night-noise-level-assessment-tool-user-guide/)

Day/Night Noise Level Assessment Tool Flowcharts (/resource/3823/day-night-noise-level-assessment-tool-flowcharts/)

Federal Railroad Administration Railroad Operations Data Sources (https://www.hudexchange.info/resource/6027/federal-railroad-administration-railroad-operations-data-sources/)

Residential Land Use Compatibility Analysis

Day/Night Noise Level (DNL) Calculator

The Day/Night Noise Level Calculator is an electronic assessment tool that calculates the Day/Night Noise Level (DNL) from roadway and railway traffic. For more information on using the DNL calculator, view the **Day/Night Noise Level Calculator Electronic Assessment Tool Overview (/programs/environmental-review/daynight-noise-level-electronic-assessment-tool/)**.

Guidelines

- To display the Road and/or Rail DNL calculator(s), click on the "Add Road Source" and/or "Add Rail Source" button(s) below.
- All Road and Rail input values must be positive non-decimal numbers.
- All Road and/or Rail DNL value(s) must be calculated separately before calculating the Site DNL.
- All checkboxes that apply must be checked for vehicles and trains in the tables' headers.
- **Note #1:** Tooltips, containing field specific information, have been added in this tool and may be accessed by hovering over all the respective data fields (site identification, roadway and railway assessment, DNL calculation results, roadway and railway input variables) with the mouse.
- **Note #2:** DNL Calculator assumes roadway data is always entered.

DNL Calculator

Site ID	Land Use Compatibility
Record Date	11 / 05 / 2025
User's Name	Karen To

Road # 1 Name:	**Meheula Pkwy. from Kamehameha Hwy. to Church Driveway.**

Vehicle Type	Cars ☑	Medium Trucks ☑	Heavy Trucks ☑
Effective Distance	65	65	65
Distance to Stop Sign			
Average Speed	25	25	25
Average Daily Trips (ADT)	14132	144	144
Night Fraction of ADT	15	15	15
Road Gradient (%)			2
Vehicle DNL	61	51	64
Calculate Road #1 DNL	66	Reset	

Road # 2 Name:	**Meheula Pkwy. from Church Driveway. to Anania Dr.**

Road #2

Vehicle Type	Cars ☑	Medium Trucks ☑	Heavy Trucks ☑
Effective Distance	70	70	70
Distance to Stop Sign			
Average Speed	25	25	25
Average Daily Trips (ADT)	13798	141	141
Night Fraction of ADT	15	15	15
Road Gradient (%)			2
Vehicle DNL	60	50	64

Calculate Road #2 DNL	55	Reset

Road # 3 Name:	**Meheula Pkwy from Anania Dr. to Makaimoimo St.**

Road #3

Vehicle Type	**Cars** ☑	**Medium Trucks** ☑	**Heavy Trucks** ☑
Effective Distance	150	150	150
Distance to Stop Sign			
Average Speed	25	25	25
Average Daily Trips (ADT)	11985	122	122
Night Fraction of ADT	15	15	15
Road Gradient (%)			2
Vehicle DNL	55	45	58
Calculate Road #3 DNL	60	Reset	

Add Road Source | Add Rail Source

Airport Noise Level	55
Loud Impulse Sounds?	○ **Yes** ◉ **No**
Combined DNL for all Road and Rail sources	**69**
Combined DNL including Airport	**69**

Calculate Reset

Mitigation Options

If your site DNL is in Excess of 65 decibels, your options are:

- **No Action Alternative**: Cancel the project at this location
- **Other Reasonable Alternatives**: Choose an alternate site
- **Mitigation**
  - **Contact your Field or Regional Environmental Officer (/programs/environmental-review/hud-environmental-staff-contacts/)**
  - Increase mitigation in the building walls (only effective if no outdoor, noise sensitive areas)
  - Reconfigure the site plan to increase the distance between the noise source and noise-sensitive uses
  - Incorporate natural or man-made barriers.
  - Construct noise barrier. See the **Barrier Performance Module (/programs/environmental-review/bpm-calculator/)**

Tools and Guidance

Day/Night Noise Level Assessment Tool User Guide (/resource/3822/day-night-noise-level-assessment-tool-user-guide/)

Day/Night Noise Level Assessment Tool Flowcharts (/resource/3823/day-night-noise-level-assessment-tool-flowcharts/)

Federal Railroad Administration Railroad Operations Data Sources (https://www.hudexchange.info/resource/6027/federal-railroad-administration-railroad-operations-data-sources/)

(This page intentionally left blank.)

Appendix J

Civil Due Diligence

(This page intentionally left blank.)

Mililani High School – Workforce Teacher Housing Civil Due Diligence
TMK:9-5-001:054 and 017 (portion)

Introduction

The proposed Mililani High School Workforce Teacher Housing site is located at the southwest corner of the parcel designated TMK (1) 9-5-001:054 and 017 (portion), which is currently occupied by Mililani High School. However, as part of the project scope, the housing development area, which is approximately 1.975 acres, will be subdivided from the main parcel and assigned its own TMK number. See Exhibit 1: Preliminary Proposed Subdivision.

Water System

Potable water service is provided to the Mililani High School parcel through the existing Honolulu Board of Water Supply (BWS) water system. According to BWS as-built records, there is an existing 16-inch waterline fronting Mililani High School along Meheula Parkway. The waterline downsizes to an 8-inch main and then back up to a 12-inch main along the portion of Meheula Parkway west of Anania Drive, which fronts the project site. The project site currently includes a parking lot and a landscaped area the school maintenance staff uses to farm produce. Therefore, there is no potable water service outside of what is used for irrigation. Pending BWS approval, a new lateral and water meter will be designed and installed to service the proposed project.

Potential Impacts and Mitigation Measures of the Proposed Project

Using the Water System Standards for the State of Hawaii (2002), the estimated water demand was calculated for the proposed project. According to the standards, an estimated 400 gallons of water per unit should be used to design the water system. Therefore, for the 94-unit development, the average water usage per day is 37,600 gallons. A demand factor of 1.5 and 3.0 is applied to the average water usage to determine the maximum daily flow and peak hour flow, respectively. The estimated maximum daily demand is 56,400 gallons per day (gpd) and the peak estimated peak hour flow is 112,800 gpd. Per the water system standards, the water system should be designed to deliver the maximum daily demand simultaneously with the required fire flow. The fire flow requirement for low-rise apartments is 1,500 gallons per minute (gpm). Excluding fire flow, the water system should to have capacity to deliver the peak hour flow.

The water availability letter from BWS, dated August 29, 2025 (see Attachment A), stated that the existing water system is adequate to accommodate the proposed 94-unit development. However, this determination is based on current available data and BWS reserves the right to revise their decision up until the submission for approval of a building permit application. Per BWS requirements, water conservation measures will be studied and implemented as deemed necessary. The construction drawings and schedule will also be submitted to BWS for approval. BWS's input is imperative to ensure there will be minimal impact on the existing water system and that surrounding properties will experience little to no water services interruptions during construction of the project.

Once water is made available to the project site, the applicant is required to pay the water system facilities charges (WSFC) to BWS. However, due to the nature of the project consisting of affordable housing, BWS may waive the WSFC and new meter cost. Any waivers would be evaluated during building permit review.

Site fire protection will also be provided by the BWS potable water system. In another letter dated September 17, 2025 (see Attachment B), BWS provided calculated flow data for the nearby fire hydrants. Based on the calculated data, the fire hydrants nearest the project site (C00902, C00903 and C01574) all meet the fire flow requirements of 1,500 gallons per minute (gpm). However, this data was calculated based on the existing design of the water system and is not indicative of actual field conditions. To better determine flows available to the project site, on-site pressure readings at various times of the day will need to be recorded. All on-site fire protection requirements will be coordinated with the Fire Prevention Bureau of the Honolulu Fire Department (see Attachment C).

The existing BWS potable water system will also likely supply the irrigation demand for the project site. Per BWS guidelines, a separate backflow preventer (BFP) will be installed for the irrigation line.

Wastewater System

The Honolulu Sewer Utilities Application map on the City and County of Honolulu GIS website does not show any gravity sewer mains or manholes along Meheula Parkway to service the proposed project. Wastewater flow generated by Mililani High School flows through a series of gravity sewer lines and into the county's main sewer system. The sewer system for the proposed development will be independent from Mililani High School's sewer system and will connect directly to the County's system.

Potential Impacts and Mitigation Measures of the Proposed Project

A sewer connection application (SCA-2025-08-00086) for the 94-unit development was submitted to the City and County of Honolulu Department of Planning and Permitting (DPP) on August 14, 2025, and is still under review. Another sewer connection application was previously submitted and approved for an outdated, denser layout. Pending approval of the most recent sewer connection application, the wastewater generated by the proposed project will be discharged to the existing sewer system. Subject to DPP's approval, the proposed connection to the existing sewer system would include installing an appropriately sized sewer main and manholes from the project site along Meheula Parkway to the existing 21-inch sewer main along Kamehameha Highway.

Using the Wastewater System Design Standards by the City and County of Honolulu, the estimated wastewater flows for the proposed development were calculated. Based on the design parameters, the base sanitary flow is expected to be approximately 18,500 gpd and the peak base sanitary flow is expected to be approximately 46,100 gpd. According to the standards, all new gravity sewer systems should be designed to carry the peak flow of wastewater without exceeding 85 percent of the pipe's full flow capacity.

As part of the pre-assessment consultation process, the Department of Health (DOH) Wastewater Branch (WWB) was contacted. Upon analysis of the proposed project, it was determined that the project does not seem to have any wastewater treatment or disposal issues since it will be serviced by the City and County of Honolulu. Therefore, DOH WWB has no objections or comments at this time.

Drainage

According to the Storm Water Utilities map on the City and County of Honolulu GIS website, there is an existing drainage system along Meheula Parkway fronting the project site. The drainage system consists of several catch basins and piping ranging in diameter from 36-inch to 42-inch. The pipe runs across Kamehameha Highway and discharges into a City and County of Honolulu drainage channel.

Per the Flood Hazard Assessment Tool, the parcel is located in Zone D of the Federal Emergency Management Agency (FEMA) flood boundaries as shown on FEMA map number 15003C0228F. Zone D is defined as areas of undetermined risk. These areas have the possibility of flood hazards, but there are no flood hazard analyses conducted to determine probability.

The project site consists of an open, landscaped area and a parking lot. A topographic survey was conducted by Sam O. Hirota, Inc. in March 2025, which shows the site generally slopes from east to west. Stormwater generated on the parking lot's surface flows toward the landscaping or to the catch basin located in the southwest corner of the parking lot. The catch basin is connected to the County's drainage system along Meheula Parkway via an 18-inch pipe. There are also existing drain inlets to the northwest of the project site, along the existing walkway to the track and field facilities, which capture any overflow stormwater runoff. Runoff calculations for the existing site conditions during a 10-year, 1-hour storm event were estimated using the Rational Method as outlined in the City and County of Honolulu Storm Water BMP Guide for New and Redevelopment (2017). Existing site conditions generate approximately 3.48 cubic feet per second (cfs) of stormwater runoff. See Exhibit 2: Existing Hydrology and Appendix I: Hydrology Calculations.

Potential Impacts and Mitigation Measures of the Proposed Project

The proposed development will increase stormwater runoff due to the addition of impervious surfaces. However, the proposed project site will be graded in such a way as to not adversely impact adjacent properties or roadways.

The runoff for a 10-year, 1-hour storm for the developed conditions was calculated using the Rational Method. The proposed development will generate approximately 10.36 cfs of stormwater runoff without mitigation measures. However, according to the Administrative Rules Title 20 Chapter 3, Rules Relating to Water Quality (2017) by the City and County of Honolulu, permanent post-construction best management practices (BMP) are required to mitigate and treat the increase in stormwater runoff from the proposed development. The master plan site layout includes several vegetated areas throughout the site. Stormwater generated on the site's impervious surfaces will be

directed to the vegetated areas, which will house drainage solutions that may include storm drain inlets, vegetated swales, etc. All drainage solutions and systems will be designed to the DPP's Storm Drainage Standards (2017).

Attachment A

BOARD OF WATER SUPPLY
KA 'OIHANA WAI
CITY AND COUNTY OF HONOLULU

630 SOUTH BERETANIA STREET • HONOLULU, HAWAI'I 96843
Phone: (808) 748-5000 • www.boardofwatersupply.com

RICK BLANGIARDI
MAYOR
MEIA

ERNEST Y. W. LAU, P.E.
MANAGER AND CHIEF ENGINEER
MANAKIA A ME KAHU WILIKI

ERWIN KAWATA
DEPUTY MANAGER
HOPE MANAKIA

NĀ'ĀLEHU ANTHONY, Chair
JONATHAN KANESHIRO, Vice Chair
BRYAN P. ANDAYA
LANCE WILHELM
EDWIN H. SNIFFEN, Ex-Officio
GENE C. ALBANO, P.E., Ex-Officio

August 29, 2025

Ms. Lacey Shimabukuro
Pacific Housing Assistance Corporation
888 Iwilei Road, Suite 200
Honolulu, Hawai'i 96817

Dear Ms. Shimabukuro:

Subject: Your Email Dated August 14, 2025 Regarding Availability of Water for Mililani High School Affordable Rental Housing Project off Mehe'ula Parkway – Tax Map Key: 9-5-001: 054

Thank you for your letter regarding the proposed 94-unit high-rise affordable rental project.

The existing water system is adequate to accommodate the proposed affordable housing development. However, please be advised that this information is based upon current data, and therefore, the Board of Water Supply (BWS) reserves the right to change any position or information stated herein up until the final approval of the building permit application. The final decision on the availability of water will be confirmed when the building permit application is submitted for approval.

When water is made available, the applicant will be required to pay our Water System Facilities Charges (WSFC) for resource development, transmission, and daily storage.

Water conservation measures are required for all proposed developments. These measures include utilization of nonpotable water for irrigation using rain catchment, drought tolerant plants, xeriscape landscaping, efficient irrigation systems, such as a drip system and moisture sensors, and the use of Water Sense labeled ultra-low flow water fixtures and toilets.

The proposed project is subject to BWS Cross-Connection Control and Backflow Prevention requirements prior to the issuance of the Building Permit Applications.

The construction drawings should be submitted for our approval, and the construction schedule should be coordinated to minimize impact to the water system.

The on-site fire protection requirements should be coordinated with the Fire Prevention Bureau of the Honolulu Fire Department.

For the request for deferral of WSFC until the Certificate of Occupancy is obtained pursuant to Section 201-H, HRS, please coordinate with Garon Hamasaki, Service Engineering Branch of our Customer Care Division at (808) 748-5472.

The BWS may waive the WSFC and new meter cost for qualified on-site affordable and homeless dwelling units, up to 500 dwelling units per year. The waivers will be evaluated when the building permit is submitted for approval. To qualify, the dwelling units must be certified as either affordable or homeless dwelling units by the appropriate agency of the City and County of Honolulu. Waiver of the WSFC will apply only to fixture units associated with the certified dwelling units. The amount of the meter waiver shall be calculated as a percentage of the number of certified dwelling units to the total number of dwelling units in the project. If the annual cap of 500 dwelling units has not been reached and a project is proposed that would qualify for more than the remaining number of dwelling units in that year, the Manager and Chief Engineer has the discretion to increase that year's limit.

If you have any questions, please contact Daniel Koge, Project Review Branch of our Water Resources Division at (808) 748-5444.

Very truly yours,

ERNEST Y. W. LAU, P.E.
Manager and Chief Engineer

Attachment B

BOARD OF WATER SUPPLY
KA 'OIHANA WAI
CITY AND COUNTY OF HONOLULU
630 SOUTH BERETANIA STREET • HONOLULU, HAWAI'I 96843
Phone: (808) 748-5000 • boardofwatersupply.com

RICK BLANGIARDI
MAYOR
MEIA

ERNEST Y. W. LAU, P.E.
MANAGER AND CHIEF ENGINEER
MANAKIA A ME KAHU WILIKĪ

ERWIN KAWATA
DEPUTY MANAGER
HOPE MANAKIA

NĀ'ĀLEHU ANTHONY, Chair
JONATHAN KANESHIRO, Vice Chair
BRYAN P. ANDAYA
LANCE WILHELM
EDWIN H. SNIFFEN, Ex-Officio
GENE C. ALBANO, P.E., Ex-Officio

September 17, 2025

Ms. Zoe Eto
Sam O. Hirota, Inc.
864 South Beretania Street
Honolulu, Hawai'i 96813

Dear Ms. Eto:

Subject: Your Email Dated September 11, 2025, Requesting Flow and Pressure Data for Mililani High School Teacher Housing Project off Mehe'ula Parkway, Tax Map Key: 9-5-001: 054.

The Board of Water Supply has suspended fire flow tests on fire hydrants as a water conservation measure. However, you may use the following calculated flow data for Fire Hydrant No. C00616, C00617, C00620, C00645, C00902, C00903, C00904, C00905, and C01574:

Fire Hydrant Number	Location	Static Pressure (psi)	Residual Pressure (psi)	Flow (gpm)
C00616	Kīpapa Drive	81	71	2,000
C00617	Kīpapa Drive	78	68	2,000
C00620	Kīpapa Drive	71	62	2,000
C00645	Kīpapa Drive	62	54	2,000
C00902	Mehe'ula Parkway	73	57	2,000
C00903	Mehe'ula Parkway	69	61	2,000
C00904	Mehe'ula Parkway	66	58	2,000
C00905	Mehe'ula Parkway	64	56	2,000
C01574	Mehe'ula Parkway	75	47	2,000

The data is based on the existing water system, and the static pressure represents the theoretical pressure at the point of calculation with the reservoir full and no demands on the water system. The static pressure is not indicative of the actual pressure in the field. Therefore, to determine the flows that are available to the site, you will have to determine the actual field pressure by taking on-site pressure readings at various times of the day and correlating that field data with the above hydraulic design data.

The map showing the location of the fire hydrants is attached.

The on-site fire protection requirements should be coordinated with the Fire Prevention Bureau of the Honolulu Fire Department.

If you have any questions, please contact Daniel Koge, Project Review Branch of our Water Resources Division at (808) 748-5444.

Very truly yours,

DANIEL KOGE
Project Review Branch

Attachment

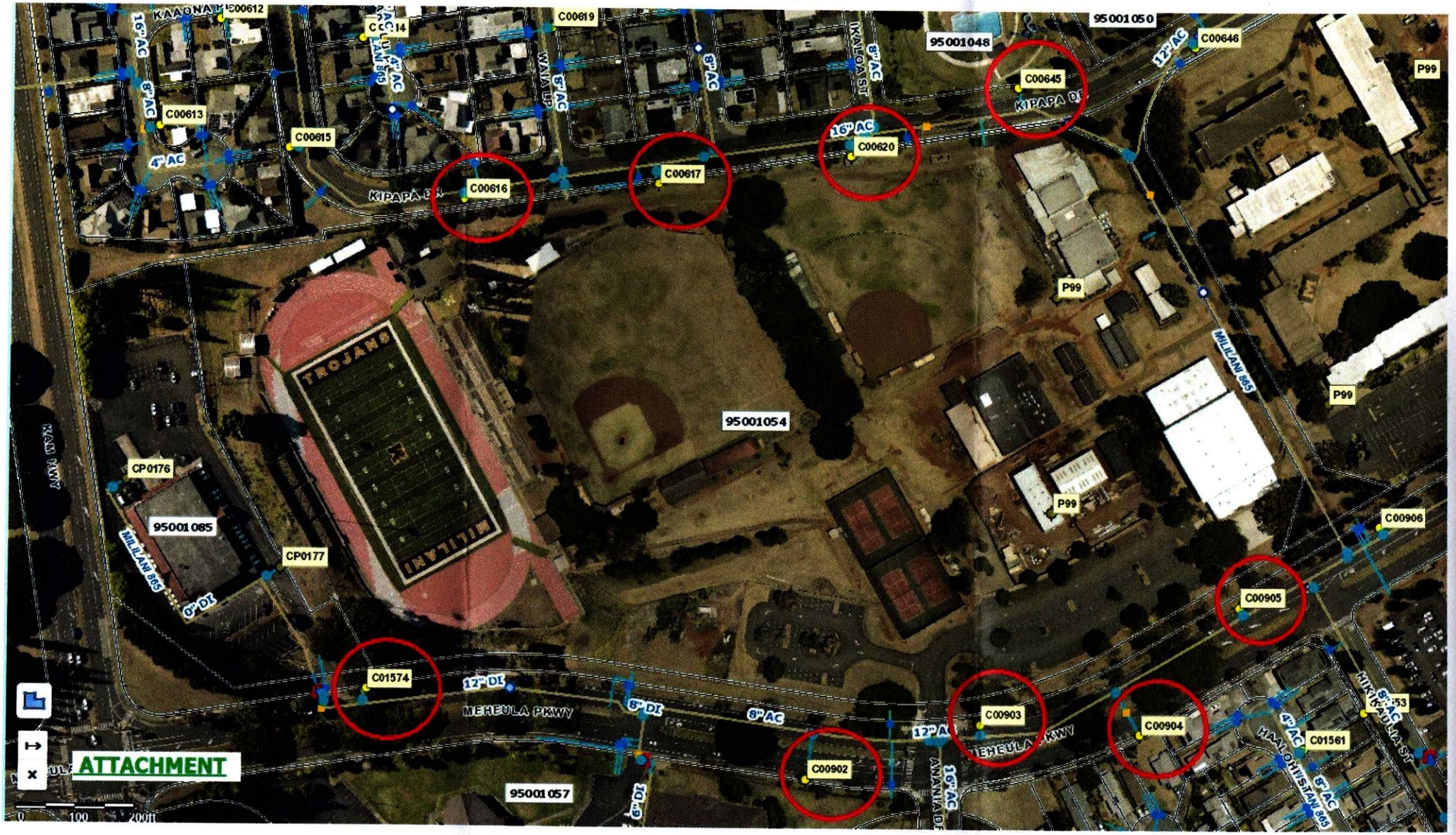

ATTACHMENT
KAAONA
C00612
16" AC
8" AC
C00613
4" AC
C00615
C00619
WAIA LP
8" AC
8" AC
IKALOA ST
8" AC
95001048
95001050
12" AC
C00646
P99
C00645
KIPAPA DR
16" AC
C00620
C00617
C00616
KIPAPA DR
P99
MILILANI 865
P99
TROJANS
MILILANI
95001054
KAM HWY
CP0176
95001085
MILILANI 865
0" DI
CP0177
P99
C00906
C00905
C01574
12" DI
MEHEULA PKWY
8" DI
8" AC
C00903
12" AC
MEHEULA PKWY
C00904
4" AC
C01561
HAALOHI STAN 865
8" AC
HIKIKAULIA ST
C00902
16" AC
ANANIA DR
95001057
6" DI
0
100
200ft

(This page intentionally left blank.)

Attachment C

HONOLULU FIRE DEPARTMENT
KA 'OIHANA KINAI AHI O HONOLULU
CITY AND COUNTY OF HONOLULU

636 SOUTH STREET • HONOLULU, HAWAI'I 96813
PHONE: (808) 723-7139 • FAX: (808) 723-7111 • WEBSITE: honolulu.gov

RICK BLANGIARDI
MAYOR
MEIA

SHELDON K. HAO
FIRE CHIEF
LUNA NUI KINAI AHI

JASON SAMALA
DEPUTY FIRE CHIEF
HOPE LUNA NUI KINAI AHI

September 17, 2025

Mr. Greg Nakai, Senior Associate
PBR Hawaii & Associates, Inc.
1001 Bishop Street, Suite 650
Honolulu, Hawai'i 96813-3484

Dear Mr. Nakai:

Subject: Pre-Assessment Consultation Environmental Assessment
Mililani High School Teacher Workforce Housing Project
Tax Map Key: 9-5-001: 054 Portion of

In response to your letter received on September 8, 2025, regarding the abovementioned subject, the Honolulu Fire Department (HFD) reviewed the submitted information and requires that the following be complied with:

1. Fire apparatus access roads shall be provided such that any portion of the facility or any portion of an exterior wall of the first story of the building is located not more than 150 feet (46 meters) from fire apparatus access roads as measured by an approved route around the exterior of the building or facility. (National Fire Protection Association [NFPA] 1; 2021 Edition, Sections 18.2.3.2.2).

   A fire apparatus access road shall extend to within 50 feet (15 meters) of at least one exterior door that can be opened from the outside and that provides access to the interior of the building. (NFPA 1; 2021 Edition, Section 18.2.3.2.1.).

2. Fire apparatus access roads shall be in accordance with NFPA 1, 2021 Edition, Section 18.2.3.

3. An approved water supply capable of supplying the required fire flow for fire protection shall be provided to all premises upon which facilities, buildings, or portions of buildings are hereafter constructed or moved into the jurisdiction. The approved water supply shall be in accordance with NFPA 1, 2021 Edition, Sections 18.3 and 18.4.

4. Civil drawings submitted to your department shall be routed to the HFD for review and approval.

The abovementioned provisions are required by the HFD and may have additional requirements to be met as determined by other agencies.

Should you have questions, please contact Battalion Chief Pao-Chi Hwang of our Fire Prevention Bureau at 808-723-7151 or hfdfpb1@honolulu.gov.

Sincerely,

REID YOSHIDA
Assistant Chief

RY/MD:sk

TRUE NORTH
SCALE: 1 in.=50 ft.

74°07'01" 326.83
76°41'25"
Easement 3373
(Map 568)
LOT 5392-B-2
358°14'02" R=670.00
79°15' 458.93
399.78
3°10'52" R=670.00
90°42'27" 57.83
87.02
3°22'50" R=696.00
8°30' 113.13
26.11
329°55'20" 215.44
8°30' R=696.00
95°56'25" 62.17
PARKWAY
Lot 5392-B-1
1.633 Acres
LOT 2755-A-1-B
1.975 Acres
375.00
LOT 2755-A-1
26.432 Acres
25°30' 320.31
340.58
MEHEULA
98°30'
181°30' 113.75
139.95
98°30' 31.23
26.20
34.42
R=830.00
R=804.00
LOT 2755-A-1-A
24.457 Acres
LOT 5392-B-1
247.75
239.99
89°55'
89°55'

EXHIBIT 1:

MILILANI HIGH SCHOOL TEACHER WORKFORCE HOUSING PROJECT

MAXIMUM BOUNDARIES OF THE PROJECT SITE

SITUATED WAIPIO, EWA,
ISLAND OF OAHU, HAWAII

TAX MAP KEY : (1) 9-5-001:017 (PORTION)
OWNER : DEPARTMENT OF EDUCATION (HIDOE)
SITE ADDRESS : 95-475 MEHEULA PKWY
MILILANI, HI 96789

TAX MAP KEY : (1) 9-5-001:054
OWNER : STATE OF HAWAII
SITE ADDRESS : 95-1200 MEHEULA PKWY
MILILANI, HI 96789

FILE NAME:X:\PROJECTS\SURVEY2024\240080_MILILANI_TEACHER_HOUSING\DWG\MHS_TWHP_SUBD.dwg

JOB NO.: 240080

SAM O. HIROTA, INC.
864 S. Beretania St.
Honolulu, HI 96813

January 8, 2026
17" x 11" = 1.30 Sq. Ft.

TRUE NORTH
SCALE: 1" = 40'

MTH-2
(Y Cut)
1,474.07 N
983.81 W
ELEV=704.71 FT

MTH-1
(1/2" Pipe w/Plug)
1,384.68 N
936.39 W
ELEV=705.98 FT

AREA 1
A=0.79 Ac
Q=0.79 cfs

AREA 2
A=1.19 Ac
Q=2.67 cfs

PROPERTY LINE, TYP.

EXHIBIT 2: EXISTING HYDROLOGY

1"=40'

PREPARED BY:
SAM O. HIROTA, INC.
January 9, 2026

TRUE NORTH
SCALE: 1" = 40'

AREA 5
A=0.41 Ac
Q=2.49 cfs

MTH-2
(Y Cut)
1,474.07' N
983.81' W
ELEV=704.71' FT

AREA 1
A=0.64 Ac
Q=3.39 cfs

AREA 4
A=0.09 Ac
Q=0.36 cfs

MTH-1
(1/2" Pipe w/Plug)
1,384.68' N
936.39' W
ELEV=705.98' FT

AREA 2
A=0.06 Ac
Q=0.09 cfs

PROPERTY LINE, TYP.

AREA 3
A=0.40 Ac
Q=1.19 cfs

AREA 6
A=0.38 Ac
Q=2.43 cfs

EXHIBIT 3: PROPOSED HYDROLOGY

1"=40'

PREPARED BY:
SAM O. HIROTA, INC.
January 9, 2026

(This page intentionally left blank.)

APPENDIX I: HYDROLOGY CALCULATIONS

Miliilani High School Workforce Teacher Housing
Prepared by: Sam O. Hirota Inc.

Date: January 9, 2026

PRE-DEVELOPMENT HYDROLOGY

Area #	Area (sf)	Area (Ac)	C	High Point (ft)	Low Point (ft)	Length (ft)	Slope (%)	Tc (min)	I (in/hr)	Correction Factor	Total Q (cfs)
1	34,295	**0.79**	0.21	706.00	696.00	362	2.76	24.10	3.00	1.60	**0.79**
2	51,938	**1.19**	0.40	707.00	691.00	418	3.83	17.60	3.00	1.85	**2.67**
	Total	**1.98**									**3.46**

POST-DEVELOPMENT HYDROLOGY

Area #	Area (sf)	Area (Ac)	C	High Point (ft)	Low Point (ft)	Length (ft)	Slope (ft/ft)	Tc (min)	I (in/hr)	Correction Factor	Total Q (cfs)
1	28,052	**0.64**	0.71	706.00	703.00	190	1.58	7.63	3.00	2.49	**3.39**
2	2,478	**0.06**	0.20	701.00	696.00	39	12.82	6.25	3.00	2.65	**0.09**
3	17,379	**0.40**	0.41	701.00	690.00	87	12.64	8.50	3.00	2.41	**1.19**
4	3,886	**0.09**	0.55	705.00	704.00	71	1.41	8.13	3.00	2.45	**0.36**
5	17,905	**0.41**	0.74	704.00	703.00	76	1.32	5.75	3.00	2.71	**2.49**
6	16,415	**0.38**	0.76	705.00	700.00	60	8.33	5.00	3.00	2.82	**2.43**
	Total	**1.98**									**9.96**

Additional Calculations			
Difference in Flow, Q_{diff}	(Q_{post} - Q_{pre})	6.50	cfs

Notes:

- Calculations shown reflect a 1-hr, 10-year storm event using the Rational Method, per City and County of Honolulu Storm Water BMP Guide for New and Redevelopment (2017).

(This page intentionally left blank.)

Appendix K

Figures

(This page intentionally left blank.)

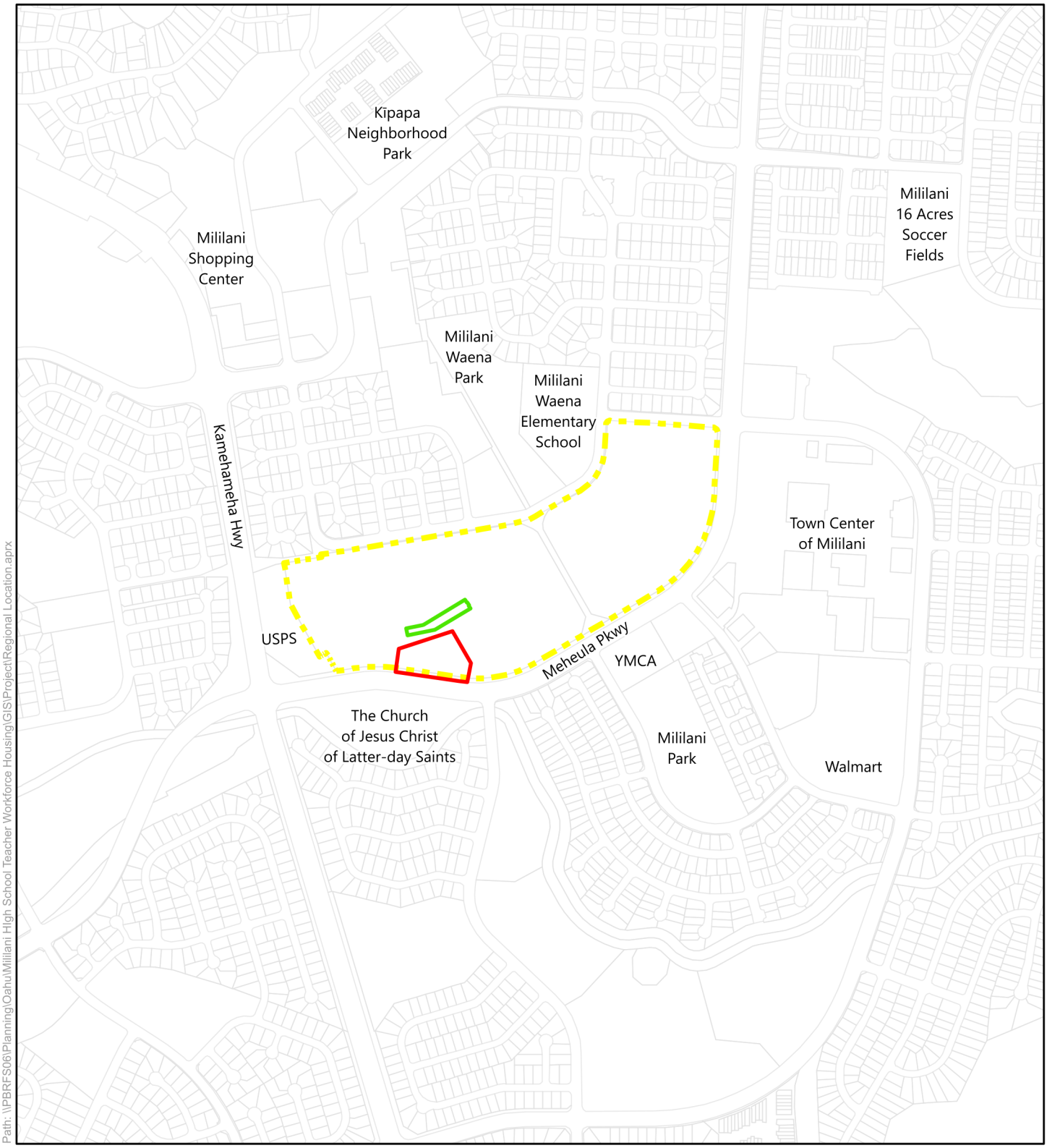

Path: \\PBRFS06\Planning\Oahu\Mililani High School Teacher Workforce Housing\GIS\Project\Regional Location.aprx

DATE: 5/11/2026

Legend

- Project Site
- Mililani High School
- Proposed Relocated Parking Area
- TMK Boundaries

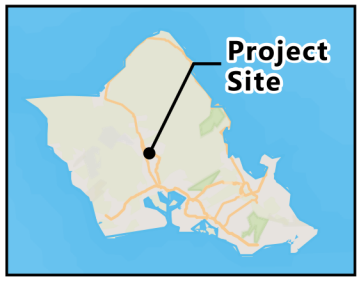

Figure 1:
Regional Location Map

Mililani High School
Teacher Workforce Housing

Island of O'ahu

North

Linear Scale (feet)
0 200 400 800

Source: City & County Honolulu, 2025. ESRI Basemap
Disclaimer: This graphic has been prepared for general planning purposes only.

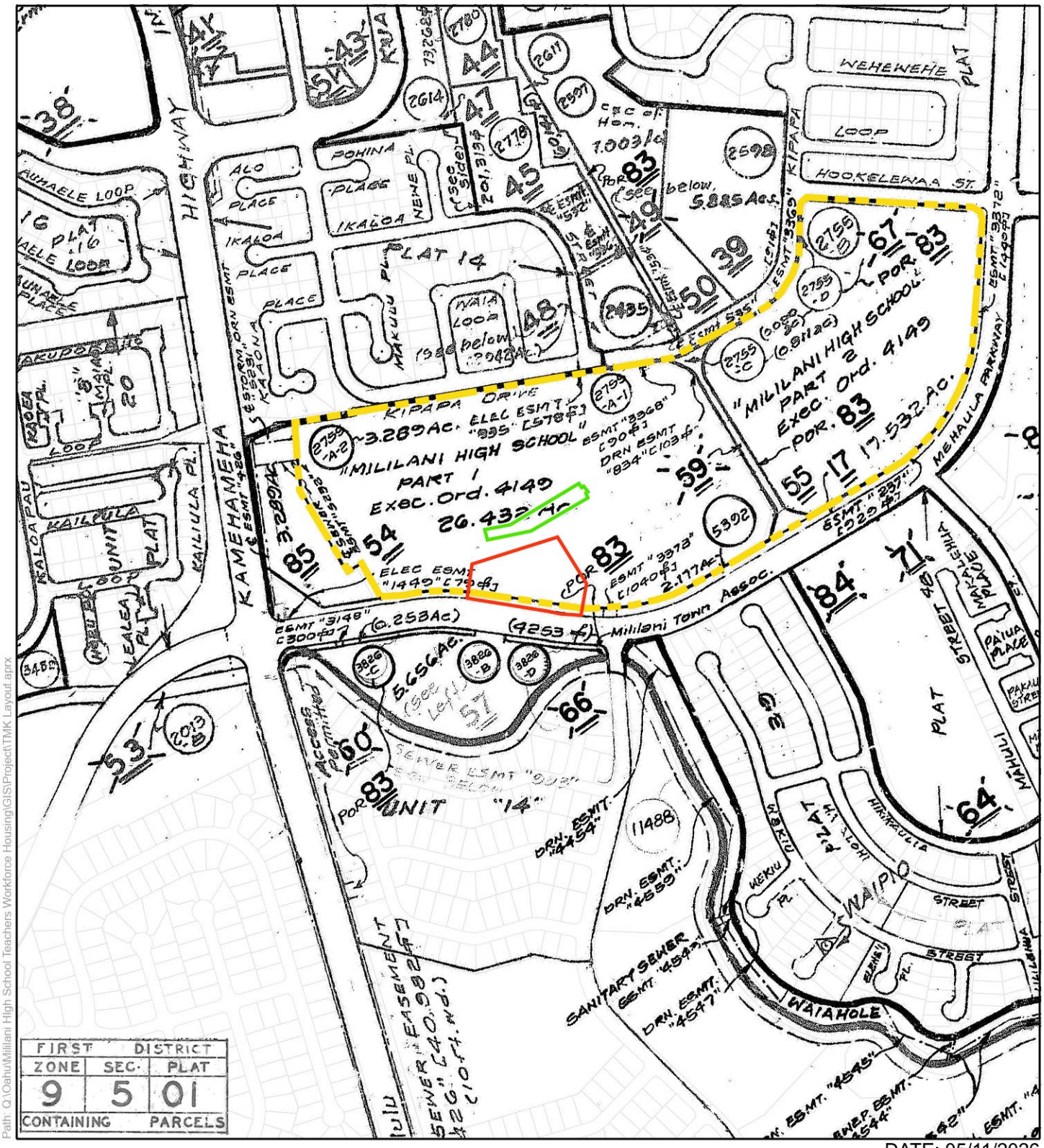

Path: Q:\Oahu\Mililani High School Teachers Workforce Housing\GIS\Project\TMK Layout.aprx

DATE: 05/11/2026

Legend

- Project Site
- Mililani High School
- Proposed Relocated Parking Area

Figure 2:
Tax Map Key

Mililani High School
Teacher Workforce Housing

Island of O'ahu

North

Linear Scale (feet)
0 125 250 500

PBR HAWAII & ASSOCIATES, INC.

Source: City & County Honolulu.
Disclaimer: This graphic has been prepared for general planning purposes only.

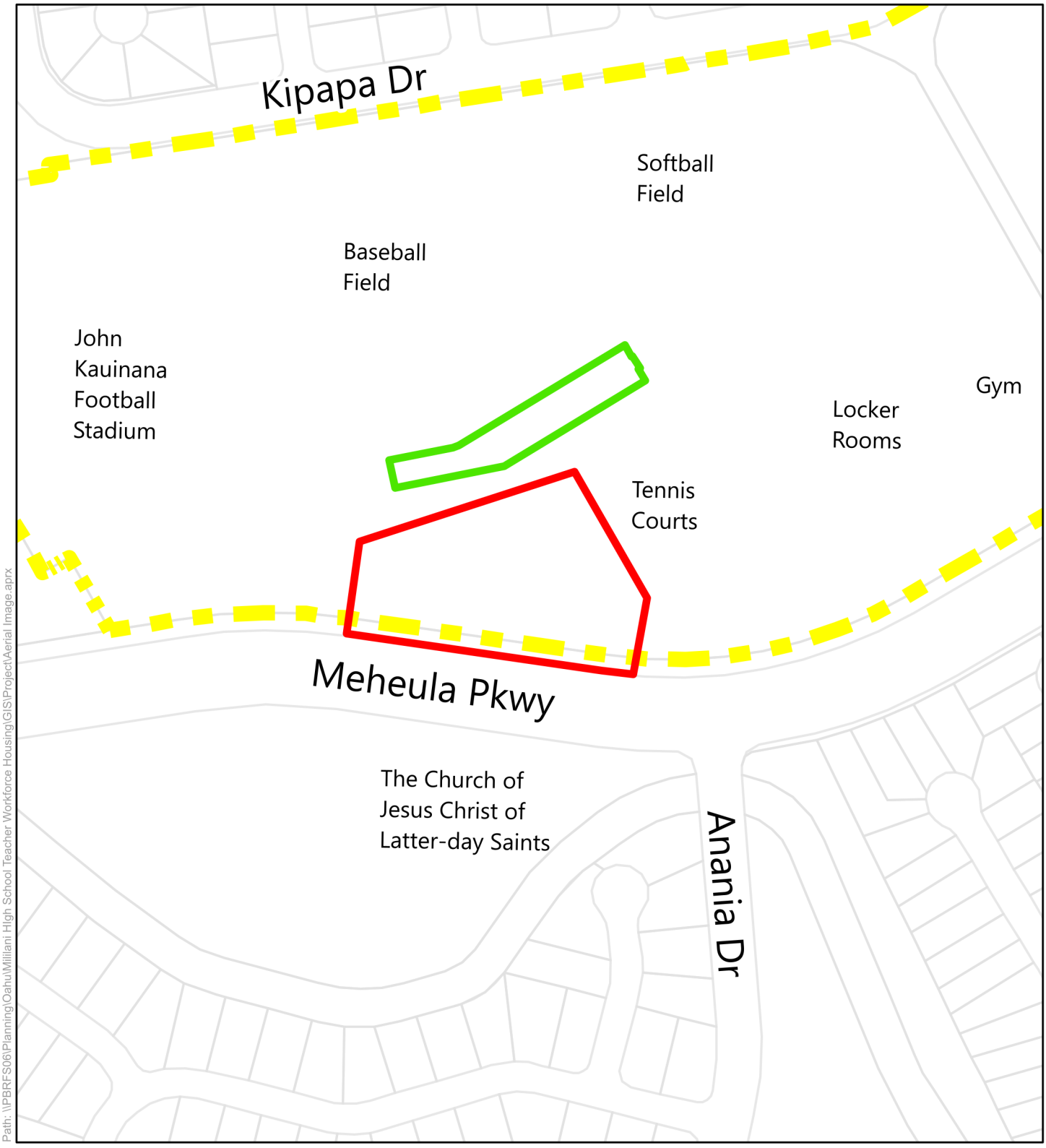

Path: \\PBRFS06\Planning\Oahu\Mililani High School Teacher Workforce Housing\GIS\Project\Aerial Image.aprx

DATE: 5/11/2026

Legend

- Project Site
- Mililani High School
- Proposed Relocated Parking Area
- TMK Boundaries

Figure 3:
Aerial Image

Mililani High School Teacher Workforce Housing

Island of O'ahu

North

Linear Scale (feet)

0 50 100 200

Source: City & County Honolulu, 2025. ESRI Basemap
Disclaimer: This graphic has been prepared for general planning purposes only.

(This page intentionally left blank.)

1. Existing access to Project site via internal driveway

2. Looking west into parking lot

3. Looking northwest toward baseball field (beyond first row of pine trees) and tennis courts (to the right)

DATE: 5/13/2026

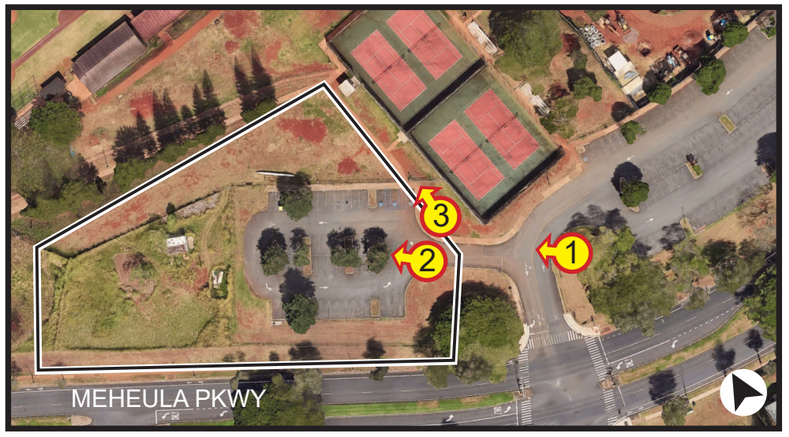

Figure 4:
Site Photos (page 1 of 4)

Mililani High School
Teacher Workforce Housing

Island of O'ahu

PBR HAWAII
& ASSOCIATES, INC.

(This page intentionally left blank.)

4. Looking west, with Project site to the left and the football stadium down the walkway lined with pine trees

5. Looking southwest toward existing gardening area

6. Looking northeast toward parking lot and tennis courts

DATE: 5/13/2026

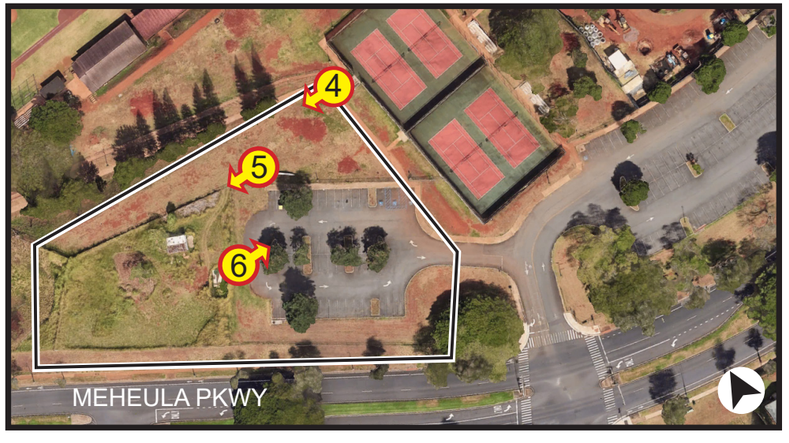

Figure 4:
Site Photos (page 2 of 4)

Mililani High School
Teacher Workforce Housing

Island of O'ahu

PBR HAWAII
& ASSOCIATES, INC.

(This page intentionally left blank.)

7. Looking northeast toward existing gardening area

8. Looking west along southern boundry of Project site, with Meheula Parkway to the left

9. Existing curb cut, where new entry driveway off Meheula Parkway is proposed to be located

DATE: 5/13/2026

Figure 4:
Site Photos (page 3 of 4)

Mililani High School
Teacher Workforce Housing

Island of O'ahu

PBR HAWAII & ASSOCIATES, INC.

(This page intentionally left blank.)

10. Looking west toward proposed relocated parking area, and toward football stadium (Feb. 2024)

11. Looking northeast toward proposed relocated parking area, with tennis courts to the right (Feb. 2024)

DATE: 5/13/2026

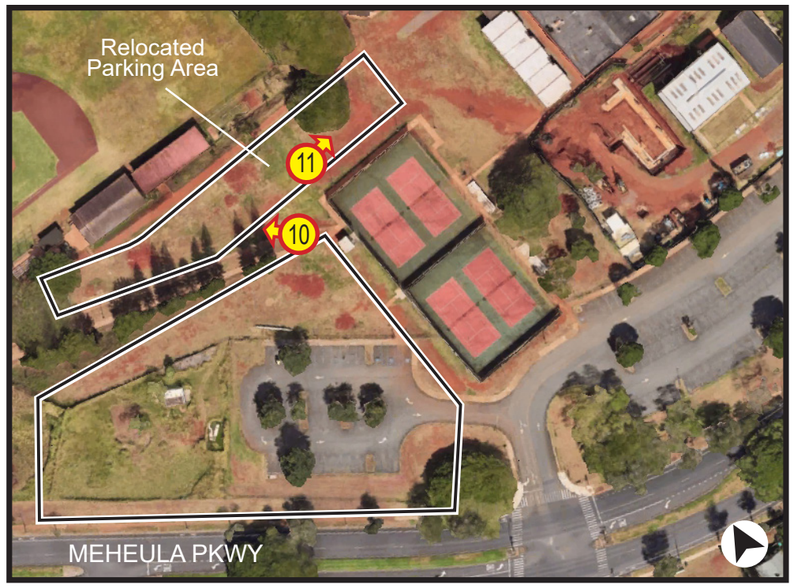

Figure 4:
Site Photos (page 4 of 4)

Mililani High School
Teacher Workforce Housing

Island of O'ahu

PBR HAWAII
& ASSOCIATES, INC.

(This page intentionally left blank.)

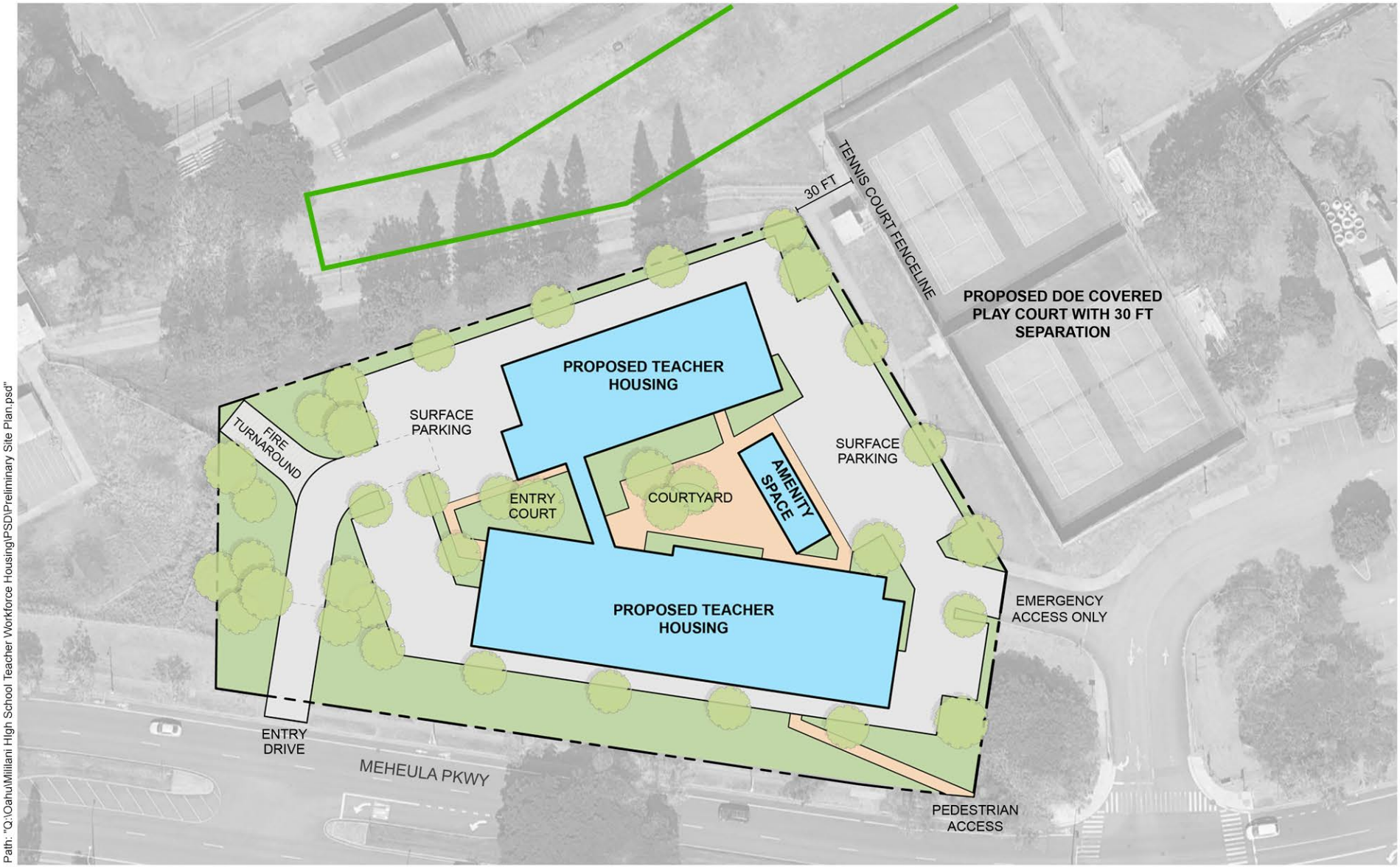

Path: "Q:\Oahu\Mililani High School Teacher Workforce Housing\PSD\Preliminary Site Plan.psd"

Legend

Project Site

Proposed Relocated Parking Area

Figure 5:
Preliminary Site Plan

Mililani High School Teacher Workforce Housing

Island of O'ahu

North

Linear Scale (feet)
0 200 400 800

PBR HAWAII & ASSOCIATES, INC.

Sources: WRNS Studio (2025); Google Maps (2025)
Disclaimer: This graphic has been prepared for general planning purposes only.

(This page intentionally left blank.)

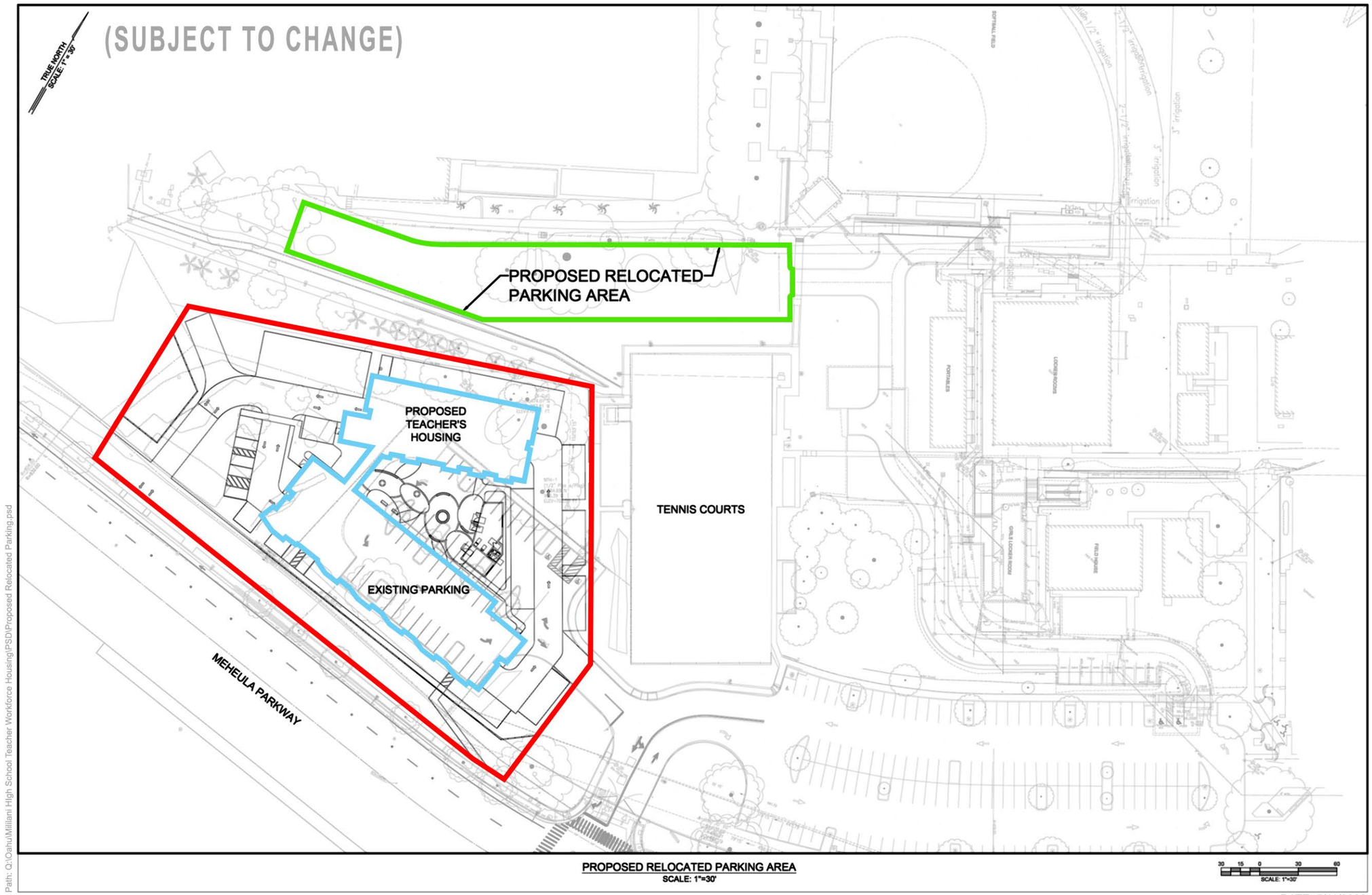

Path: Q:\Oahu\Mililani High School Teacher Workforce Housing\PSD\Proposed Relocated Parking.psd

DATE: 5/11/2026

Legend

- Project Site
- Proposed Relocated Parking Area
- Proposed Teacher Workforce Housing Building Footprint

Source: Sam O Hirota, Inc.
Disclaimer: This graphic has been prepared for general planning purposes only.

Figure 5b:
Proposed Relocated Parking

Mililani High School Teacher Workforce Housing

Island of O'ahu

(This page intentionally left blank.)

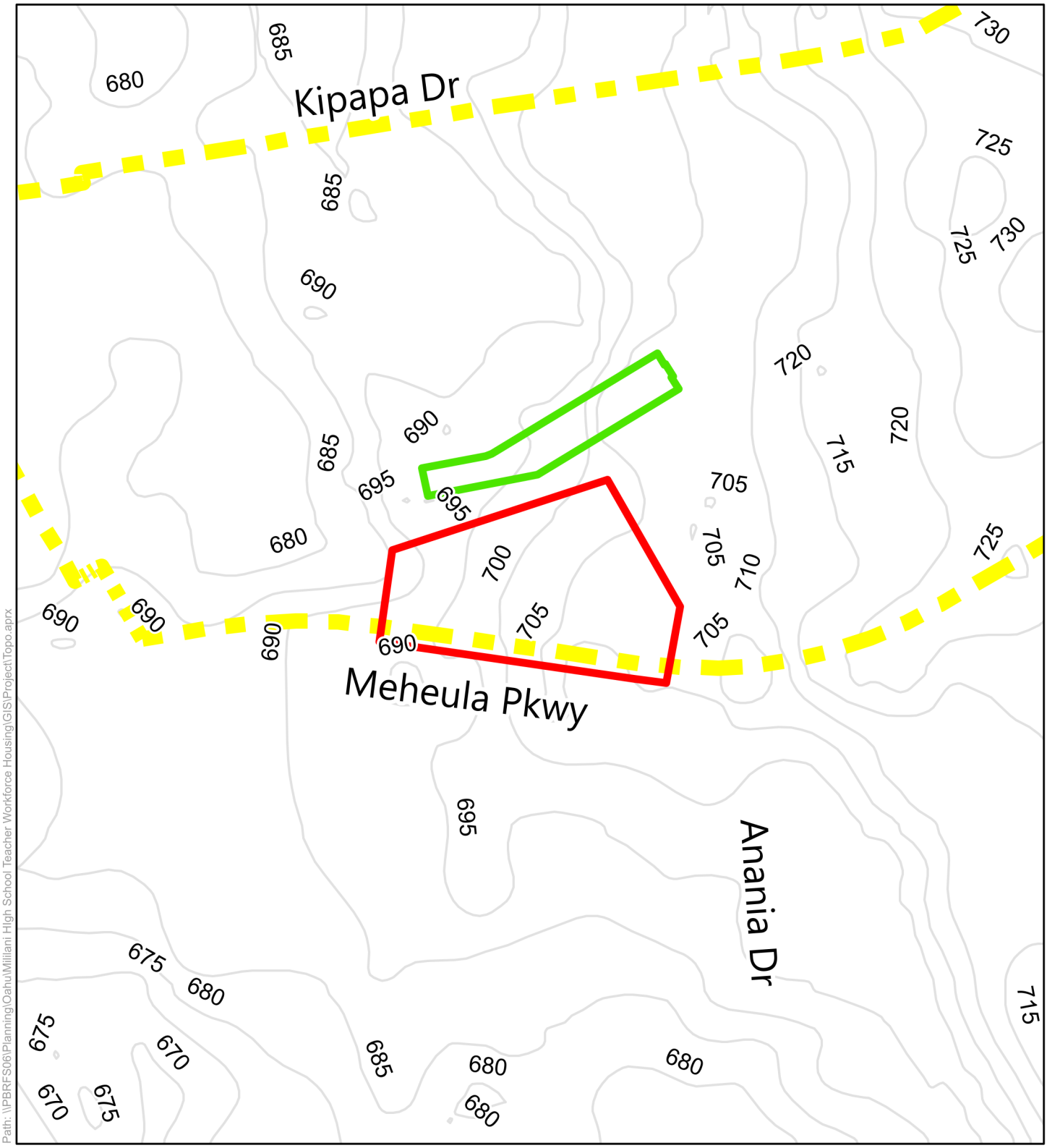

Path: \\PBRFS06\Planning\Oahu\Mililani High School Teacher Workforce Housing\GIS\Project\Topo.aprx

DATE: 5/11/2026

Legend

- Project Site
- Mililani High School
- Proposed Relocated Parking Area
- 5ft Contours

Figure 6:
Topography

Mililani High School Teacher Workforce Housing

Island of O'ahu

North

Linear Scale (feet)

0 50 100 200

Source: City & County Honolulu, 2025. NOAA, 2007. ESRI Basemap

Disclaimer: This graphic has been prepared for general planning purposes only.

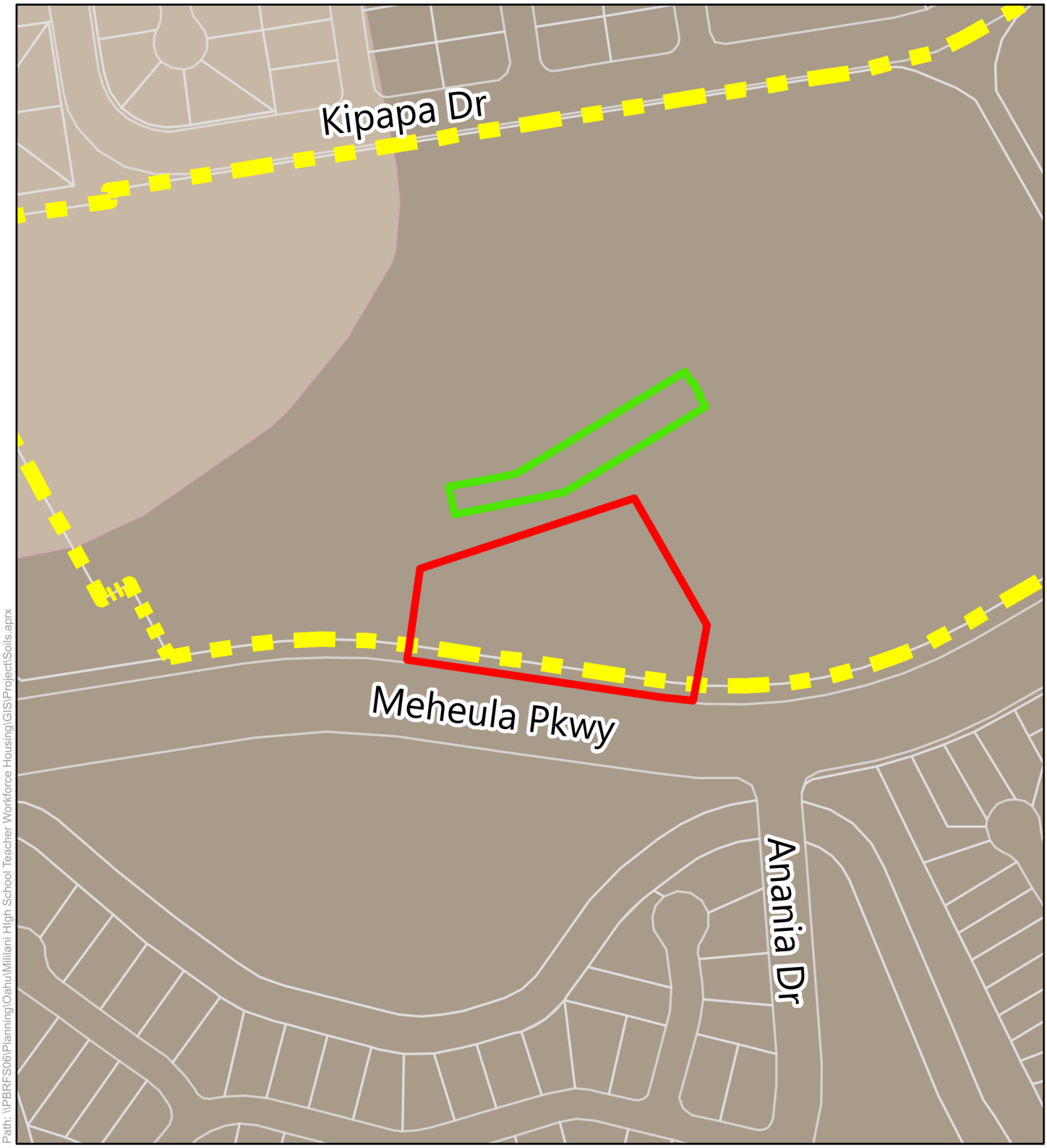

Path: \\PBRFS06\Planning\Oahu\Mililani High School Teacher Workforce Housing\GIS\ProjectSoils.aprx

Legend

- Project Site
- Mililani High School
- Proposed Relocated Parking Area
- TMK Boundaries

NRCS Soil Classification

- WaA: Wahiawa silty clay, 0 to 3 percent slopes
- WaB: Wahiawa silty clay, 3 to 8 percent slopes

DATE: 5/11/2026

Figure 7:
Natural Resources Conservation Service Soil Survey
Mililani High School Teacher Workforce Housing

Island of O'ahu

North

Linear Scale (feet)
0 50 100 200

Source: City & County Honolulu, 2025. USDA NRCS, 2020.
Disclaimer: This graphic has been prepared for general planning purposes only.

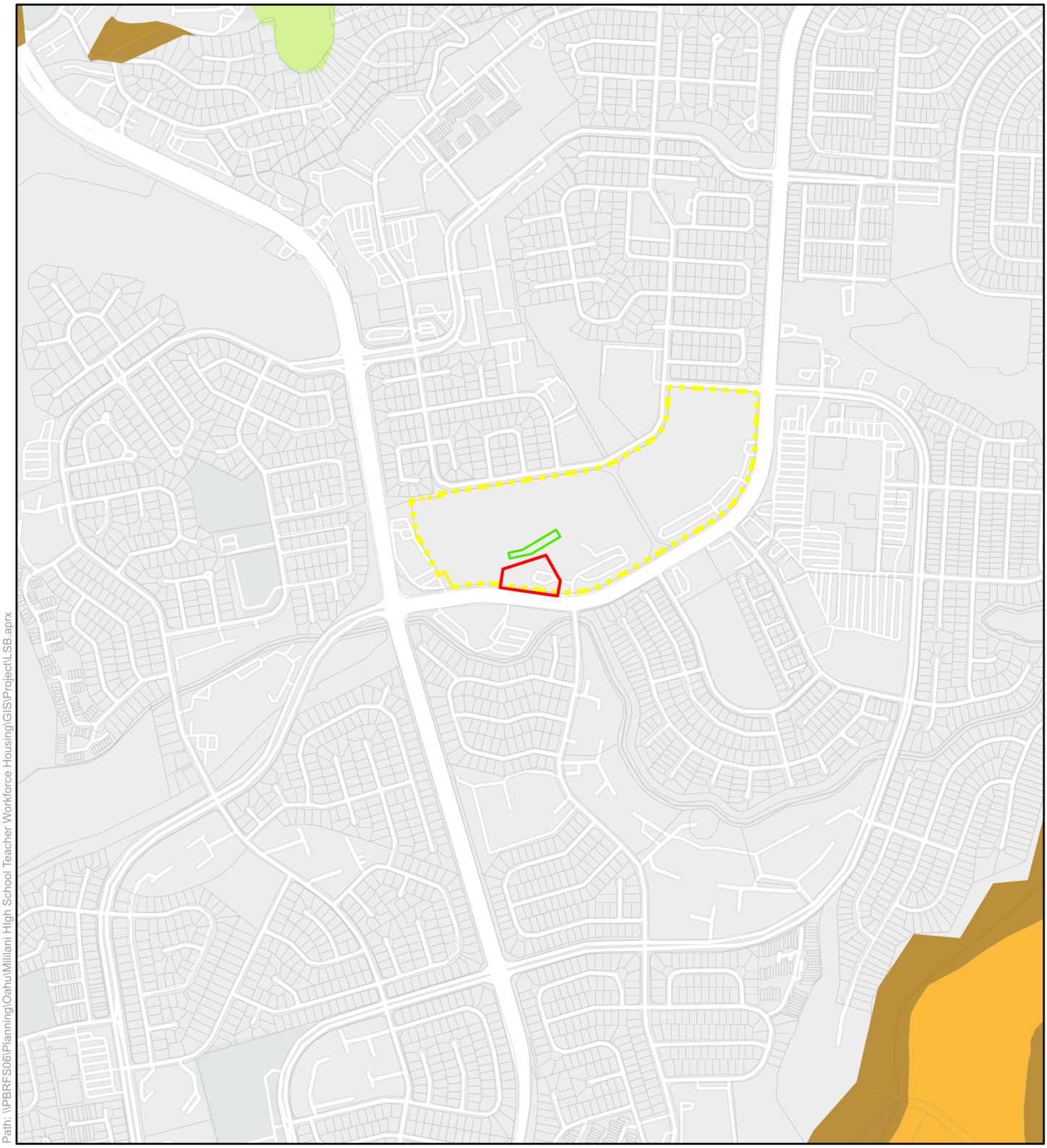

Path: \\PBRFS06\Planning\Oahu\Mililani High School Teacher Workforce Housing\GIS\Project\LSB.aprx

DATE: 5/12/2026

Legend

- Project Site
- Mililani High School
- Proposed Relocated Parking Area
- TMK Boundaries

LSB Land Classification

- B - Good
- D - Poor
- E - Very Poor
- U - Urban/Unclassified

Figure 8:
Land Study Bureau
Detailed Land Classification
Mililani High School
Teacher Workforce Housing

Island of O'ahu

North

Linear Scale (feet)
0 250 500 1000

Source: City & County Honolulu, 2025. University of Hawaii Land Study Bureau, 1972, digitized by State OP, 2012. ESRI Basemap.
Disclaimer: This graphic has been prepared for general planning purposes only.

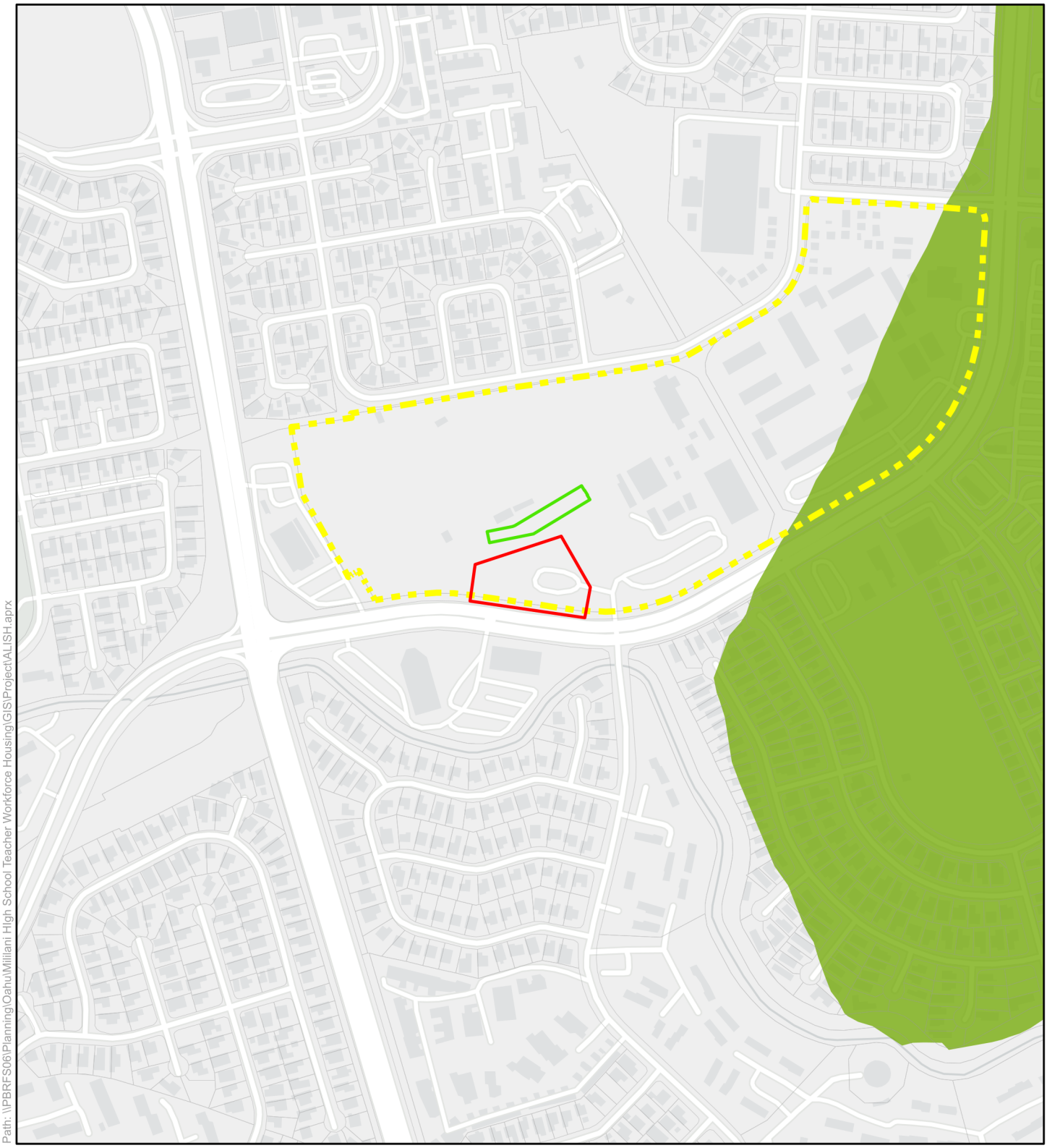

Path: \\PBRFS06\Planning\Oahu\Mililani High School Teacher Workforce Housing\GIS\Project\ALISH.aprx

Legend

- Project Site
- Mililani High School
- Proposed Relocated Parking Area
- TMK Boundaries

ALISH

- Prime ALISH
- Unclassified

Figure 9:

DATE: 5/12/2026

Agricultural Lands of Importance to the State of Hawai'i

Mililani High School Teacher Workforce Housing

Island of O'ahu

North

Linear Scale (feet)

0 125 250 500

Source: City & County Honolulu, 2025. State Department of Agriculture, 1977. ESRI Basemap

Disclaimer: This graphic has been prepared for general planning purposes only.

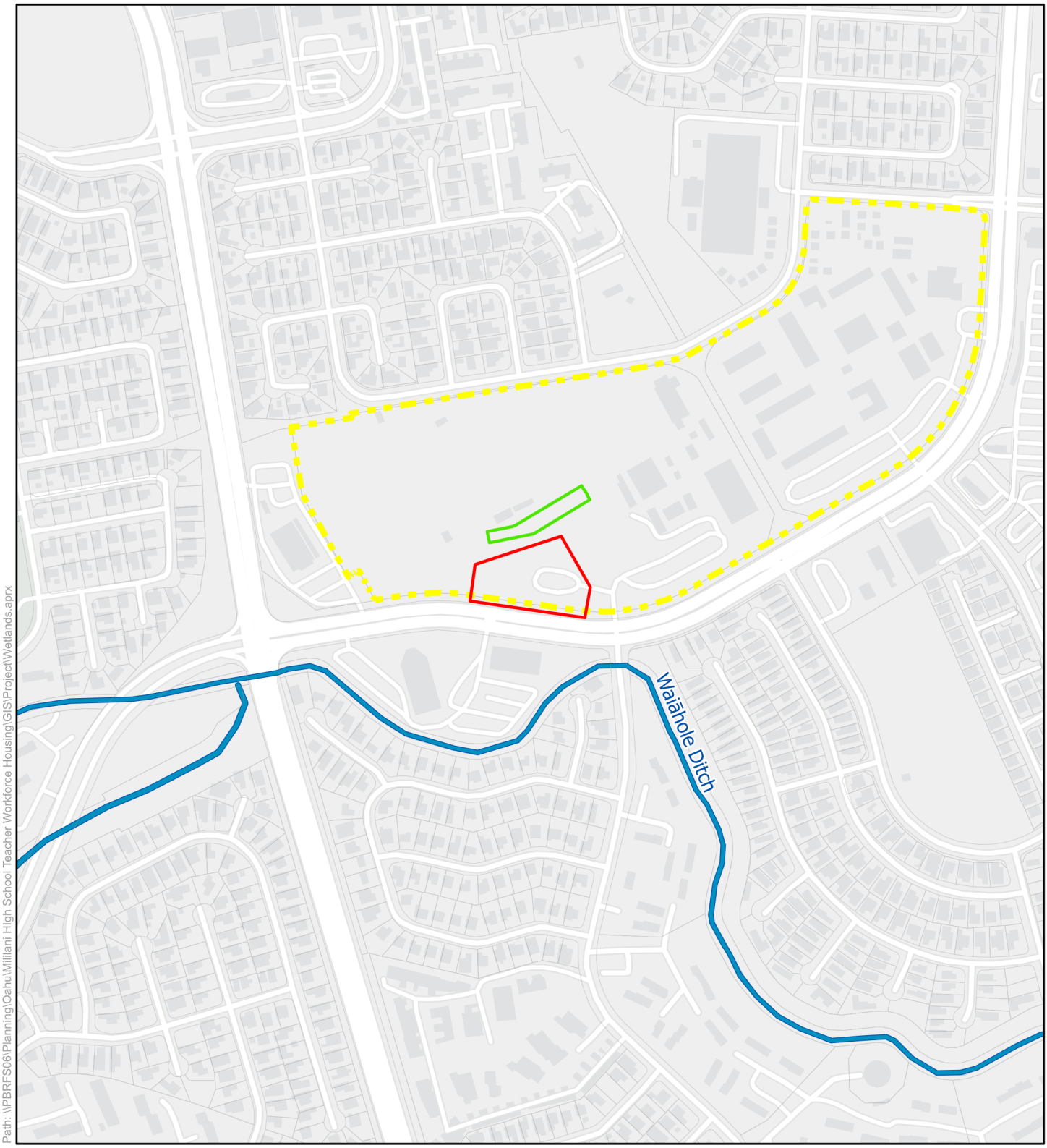

Path: \\PBRFS06\Planning\Oahu\Mililani High School Teacher Workforce Housing\GIS\ProjectWetlands.aprx

Legend

- Project Site
- Mililani High School
- Proposed Relocated Parking Area
- TMK Boundaries

Wetlands

- Riverine

Figure 10:
USFWS National Wetlands Inventory
Mililani High School Teacher Workforce Housing

DATE: 5/12/2026

Island of O'ahu

North

Linear Scale (feet)

0 125 250 500

Source: City & County Honolulu, 2025. USFWS National Wetland Inventory, 2024. ESRI Basemap
Disclaimer: This graphic has been prepared for general planning purposes only.

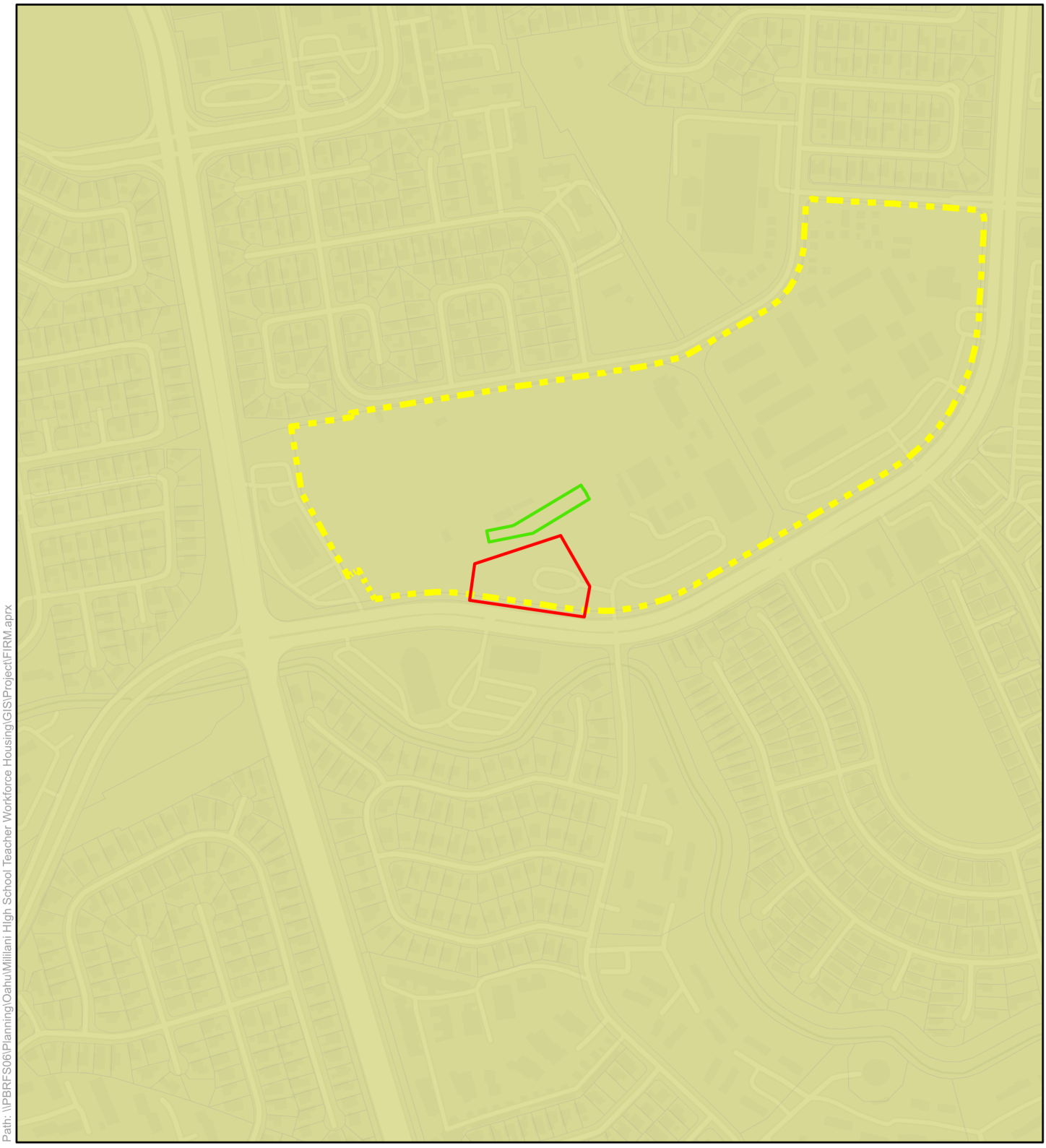

Path: \\PBRFS06\Planning\Oahu\Mililani High School Teacher Workforce Housing\GIS\Project\FIRM.aprx

DATE: 5/12/2026

Legend

- Project Site
- Mililani High School
- Proposed Relocated Parking Area
- TMK Boundaries

Flood Hazard Areas

- D: Unstudied Areas

Figure 11:

Flood Insurance Rate Map

Mililani High School Teacher Workforce Housing

Island of O'ahu

North

Linear Scale (feet)

0 125 250 500

Source: City & County Honolulu, 2025FEMA Flood Map Service Center, 2024. ESRI Basemap

Disclaimer: This graphic has been prepared for general planning purposes only.

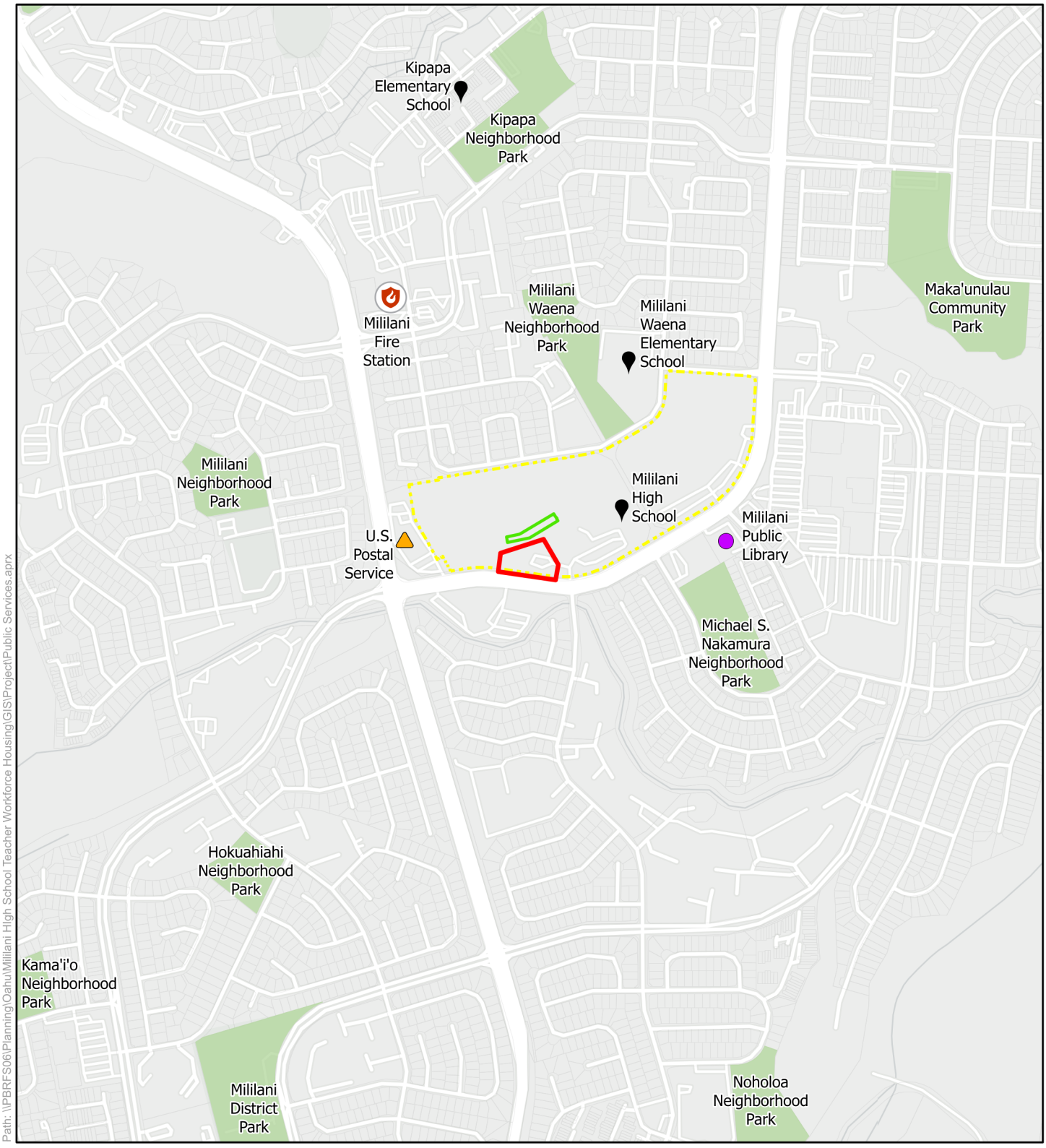

Path: \\PBRFS06\Planning\Oahu\Mililani High School Teacher Workforce Housing\GIS\Project\Public Services.aprx

DATE: 5/12/2026

Legend

- Project Site
- Mililani High School
- Proposed Relocated Parking Area
- TMK Boundaries
- Public Schools
- Parks
- Fire Stations
- Public Libraries
- Postal Services

Figure 12:
Public Facilities
Mililani High School Teacher Workforce Housing

Island of O'ahu

North

Linear Scale (feet)
0 250 500 1000

Source: City & County Honolulu, 2017 & 2019 & 2025. State DOE, 2023. ESRI Basemap
Disclaimer: This graphic has been prepared for general planning purposes only.

(This page intentionally left blank.)

Appendix L

Draft EA Public Review Comments & Responses

(This page intentionally left blank.)

STATE OF HAWAIʻI
OFFICE OF PLANNING
& SUSTAINABLE DEVELOPMENT

JOSH GREEN, M.D.
GOVERNOR

SYLVIA LUKE
LT. GOVERNOR

MARY ALICE EVANS
DIRECTOR

235 South Beretania Street, 6th Floor, Honolulu, Hawaiʻi 96813
Mailing Address: P.O. Box 2359, Honolulu, Hawaiʻi 96804

Telephone: (808) 587-2846
Fax: (808) 587-2824
Web: https://planning.hawaii.gov/

Coastal Zone Management Program

Environmental Review Program

Land Use Commission

Land Use Division

Special Plans Branch

State Transit-Oriented Development

Statewide Geographic Information System

Statewide Sustainability Branch

DTS 202601231317NA
Transmitted via email

February 13, 2026

Mr. Greg Nakai, Senior Associate
PBR HAWAII & Associates, Inc.
1001 Bishop Street, Suite 650
Honolulu, Hawaiʻi 96813

Dear Mr. Nakai:

Subject: Comments on a Draft Environmental Assessment
Mililani High School Teacher Workforce Housing Project
Mililani, Oʻahu, Hawaiʻi
TMK: (1) 9-5-001:017 and 054

The Office of Planning and Sustainable Development (OPSD) reviewed the materials submitted with your Request for Comments on the Draft Environmental Assessment (DEA) for the Mililani High School Teacher Workforce Housing Project (Project). The Project is a 95-unit multi-family rental apartment complex featuring a mix of one- and two-bedroom units. This Project will house the Department of Education (DOE) teachers, education personnel, and their families, who will be given a preference to live in the units. The units will be rented to households earning up to 120% of the Area Median Income (AMI). The site is approximately 1.975 acres and State Land Use is urban with Residential (R-5) zoning.

Comments on the Draft Environmental Assessment

1) OPSD acknowledges that the DEA addresses both Hawaiʻi Revised Statutes (HRS) Chapter 205A and Chapter 226—the Coastal Zone Management Act and the Hawaiʻi State Planning Act, respectively. OPSD appreciates the table identifying the areas where this Project supports these policies.

2) OPSD has reviewed the section identifying the Hawaii 2050 Sustainability Plan. OPSD is pleased to see that this Project represents smart-growth principles, is committed to waste reduction, and demonstrates a strong commitment to integrating sustainable design principles.

3) The Project should consider how to promote alternative transportation with a multimodal approach. This site is within a 10-minute walking distance from

the Mililani Transit Center; thus, this Project should encourage teachers and DOE employees to take advantage of the proximity and use public transportation when possible. The transportation impact assessment points out there are roughly 78 vehicles (40 outbound during the AM peak and 38 inbound during the PM peak) that will be going in and out during peak hours. A goal should be to minimize vehicular use during peak hours.

Internal pedestrian/bicycle circulation and facilities should be thoughtfully developed for the Project site. This would involve proper multi-use paths that do not require pedestrians to interact with cars, and crosswalks at conflict points. Internal circulation networks should be substantially connected to external networks. Additionally, a parking structure would be a more efficient use of land as an alternative to surface parking and would create an environment that is not so autocentric.

OPSD understands that teacher workforce housing is in high demand. This Project meets this dire need and will be a step in the right direction toward increasing affordable housing.

We look forward to reviewing the Final Environmental Assessment for the Project. If you have any questions regarding this comment letter, please contact Seiji Ogawa, Land Use Division, at Seiji.ogawa@hawaii.gov or (808) 587-2898.

Mahalo,

Mary Alice Evans

Mary Alice Evans
Director

c: Riki Fujitani, Hawai‘i School Facilities Authority

PBR HAWAII
& ASSOCIATES, INC.

KIMI MIKAMI YUEN, LEED® AP BD+C
President / Chairperson

VINCENT SHIGEKUNI
Executive Vice-President / Principal

GRANT T. MURAKAMI, AICP, LEED® AP BD+C
Executive Vice-President / Principal

CATIE CULLISON, AICP
Senior Vice-President / Principal

TOM SCHNELL, AICP
Vice-President / Principal

MARC SHIMATSU, PLA, ASLA
Vice-President / Principal

RAYMOND T. HIGA, PLA, ASLA
Associate Principal

DACHENG DONG, LEED® AP
Associate Principal

NATHALIE RAZO
Associate Principal

ANN MIKIKO BOUSLOG, PhD
Director of Land Economics & Real Estate

RAMSAY R. M. TAUM
Cultural Sustainability Planner

ETSUYO KILA
Senior Associate

GREG NAKAI
Senior Associate

BRADLEY FURUYA, AICP
Associate

C.R. 'IMIPONO WICHMAN
Associate

THERESA DEAN
Associate

R. STAN DUNCAN, PLA, ASLA
Chairman Emeritus

RUSSELL Y. J. CHUNG, PLA, FASLA
Principal Emeritus

THOMAS S. WITTEN, FASLA
Principal Emeritus

W. FRANK BRANDT, FASLA
Founding Partner

1001 Bishop Street, Suite 650
Honolulu, Hawai'i 96813-3484
Tel: (808) 521-5631
Fax: (808) 523-1402
E-mail: sysadmin@pbrhawaii.com

printed on recycled paper

May 18, 2026

Ms. Mary Alice Evans, Director
State of Hawai'i
Office of Planning and Sustainable Development
235 South Beretania Street, 6th Floor
Honolulu, Hawai'i 96813

Attn: Seiji Ogawa, Land Use Division

SUBJECT: HRS CHAPTER 343 DRAFT ENVIRONMENTAL ASSESSMENT (EA) – MILILANI HIGH SCHOOL TEACHER WORKFORCE HOUSING PROJECT, MILILANI, O'AHU, PORTIONS OF TAX MAP KEYS (TMKs) 9-5-001: 017 AND 054

Dear Ms. Evans:

Thank you for your letter (DTS 202601231317NA) dated February 13, 2026, regarding the subject Project. As the planning consultant to Pacific Housing Assistance Corporation (PHAC), which is the developer working with the School Facilities Authority on the Mililani High School Teacher Workforce Housing Project, we appreciate your supportive comments for the project and provide the following responses:

1. Thank you for acknowledging the project's alignment with the Coastal Zone Management Act, the Hawai'i State Planning Act.
2. Thank you for acknowledging the project's alignment with the Hawai'i 2050 Sustainability Plan.
3. As discussed in Sections 4.2.1 Roadways and Traffic, 4.2.2 Public Transportation, and 4.2.3 Pedestrian and Bicycle Facilities, transportation demand management (TDM) strategies are recommended to encourage other modes of transportation to potentially reduce auto trips from the Project site.

   As discussed in Section 4.2.3, the Project will include multi-use paths throughout the Project site that will connect to existing pedestrian and bicycle facilities.

   The Proposed Project seeks to use the site efficiently and balance costs, with surface parking around (and partially covered by) the buildings. While a parking structure could present a more efficient use of land, it would drive up development costs and jeopardize affordability.

We appreciate your acknowledgment that teacher workforce housing is in high demand and that this Project meets this dire need and will be a step in the right direction toward increasing affordable housing.

We value your participation in the environmental review process. Your email and our response will be reproduced in the forthcoming Final EA.

Sincerely,

PBR HAWAII

Greg Nakai
Senior Associate

cc: Lacey Shimabukuro, PHAC
Karen Arakawa, PHAC

JOSH GREEN, M.D.
GOVERNOR
KE KIA‘ĀINA

STEPHEN F. LOGAN
MAJOR GENERAL
ADJUTANT GENERAL
KA ‘AKUKANA KENELALA

PHILLIP L. MALLORY III
BRIGADIER GENERAL
DEPUTY ADJUTANT GENERAL
KA HOPE ‘AKUKANA KENELALA

STATE OF HAWAIʻI
KA MOKUʻĀINA O HAWAIʻI
DEPARTMENT OF DEFENSE
KA ‘OIHANA PILI KAUA
OFFICE OF THE ADJUTANT GENERAL
3949 DIAMOND HEAD ROAD
HONOLULU, HAWAIʻI 96816-4495

February 23, 2026

PBR HAWAII & Associates, Inc.
Attn: Greg Nakai, Senior Associate
1001 Bishop Street, Suite 650
Honolulu, HI 96813
Email: sysadmin@pbrhawaii.com

SUBJECT: Draft Environmental Assessment for
Mililani High School Teacher Workforce Housing
TMK: (1) 9-5-001:017 and 054 (por.)
Mililani, O`ahu, Hawai`i

Aloha Mr. Nakai:

Thank you for your letter dated January 21, 2026, regarding the above subject project. The State of Hawai‘i, Department of Defense has no comments to offer at this time.

Should there be any questions, please contact Major Randall Duldulao at 808-369-3487 or randall.s.duldulao@hawaii.gov.

Best Wishes,

Shao Yu Lee, R.A.
Major, Hawai‘i National Guard
Chief Engineering Officer

PBR HAWAII
& ASSOCIATES, INC.

KIMI MIKAMI YUEN, LEED® AP BD+C
President / Chairperson

VINCENT SHIGEKUNI
Executive Vice-President / Principal

GRANT T. MURAKAMI, AICP, LEED® AP BD+C
Executive Vice-President / Principal

CATIE CULLISON, AICP
Senior Vice-President / Principal

TOM SCHNELL, AICP
Vice-President / Principal

MARC SHIMATSU, PLA, ASLA
Vice-President / Principal

RAYMOND T. HIGA, PLA, ASLA
Associate Principal

DACHENG DONG, LEED® AP
Associate Principal

NATHALIE RAZO
Associate Principal

ANN MIKIKO BOUSLOG, PhD
Director of Land Economics & Real Estate

RAMSAY R. M. TAUM
Cultural Sustainability Planner

ETSUYO KILA
Senior Associate

GREG NAKAI
Senior Associate

BRADLEY FURUYA, AICP
Associate

C.R. ʻIMIPONO WICHMAN
Associate

THERESA DEAN
Associate

R. STAN DUNCAN, PLA, ASLA
Chairman Emeritus

RUSSELL Y. J. CHUNG, PLA, FASLA
Principal Emeritus

THOMAS S. WITTEN, FASLA
Principal Emeritus

W. FRANK BRANDT, FASLA
Founding Partner

May 18, 2026

Ms. Shao Yu Lee, R.A.
Major, Hawai‘i National Guard
Chief Engineering Officer
State of Hawai‘i
Department of Defense
3949 Diamond Head Road
Honolulu, Hawai‘i 96816-4495

Attn: Major Randall Duldulao

SUBJECT: HRS CHAPTER 343 DRAFT ENVIRONMENTAL ASSESSMENT (EA) – MILILANI HIGH SCHOOL TEACHER WORKFORCE HOUSING PROJECT, MILILANI, O‘AHU, PORTIONS OF TAX MAP KEYS (TMKs) 9-5-001: 017 AND 054

Dear Major Lee:

Thank you for your letter dated February 23, 2026, regarding the subject Project. As the planning consultant to Pacific Housing Assistance Corporation (PHAC), which is the developer working with the School Facilities Authority on the Mililani High School Teacher Workforce Housing Project, we acknowledge that the Hawai‘i State Department of Defense has no comments to offer at this time.

We value your participation in the environmental review process. Your email and our response will be reproduced in the forthcoming Final EA.

Sincerely,

PBR HAWAII

Greg Nakai
Senior Associate

cc: Lacey Shimabukuro, PHAC
Karen Arakawa, PHAC

1001 Bishop Street, Suite 650
Honolulu, Hawai‘i 96813-3484
Tel: (808) 521-5631
Fax: (808) 523-1402
E-mail: sysadmin@pbrhawaii.com

printed on recycled paper

JOSH GREEN, M.D.
GOVERNOR

KEITH T. HAYASHI
SUPERINTENDENT

STATE OF HAWAI'I
DEPARTMENT OF EDUCATION
KA 'OIHANA HO'ONA'AUAO
P.O. BOX 2360
HONOLULU, HAWAI'I 96804

OFFICE OF FACILITIES AND OPERATIONS

Certified Mail No. 9589 0710 5270 0756 0050 28
Return Receipt Requested

February 23, 2026

Mr. Greg Nakai
PBR Hawaii & Associates, Inc.
1001 Bishop Street, Suite 650
Honolulu, Hawaii 96813

Re: Draft Environmental Assessment and Anticipated Finding of No Significant Impact For the Proposed Mililani High School Teacher Workforce Housing Project, Mililani, Oahu, Hawaii, Portions of TMK Nos. (1) 9-5-001:017 and 054

Dear Mr. Nakai:

Thank you for your letter dated January 21, 2026. The Hawaii State Department of Education (Department) has reviewed the information provided in the Draft Environmental Assessment (DEA) and offers the following comments for the proposed Mililani High School Teacher Workforce Housing Project (Project).

The Department recognizes the importance of providing affordable housing for our educators and views the Project as an opportunity to support public education. As noted in the DEA, the Project will be developed on the southwest portion of the Mililani High School (MHS) campus. Based on the location and size of the Project, the Department believes that there will be significant impacts on school operations that require careful consideration.

MHS is a vital community asset, and maintaining its full functionality must remain a top priority. It is, therefore, essential that the Project does not intrude upon or displace existing instructional spaces, athletic fields, parking areas, or student gathering areas. Any reduction in these resources could significantly disrupt the educational environment and reduce the quality of student life on campus. With this in mind, the Department offers the following comments to the DEA.

Department Land Ownership and Use of School Property

In Section 1.4, the Department would like to clarify that by operation of law, the land underlying the Project is owned by the State of Hawaii, Department of Education. The Department would

also like to note that as of the date of this letter, final approval for use of the school property for the Project is still pending. The Department further notes that before the Department approves any final disposition of land, a subdivision to create a legal leasehold parcel will be required. In addition, a land lease for the Project will be necessary.

The Department's approval of land disposition for this Project is conditioned upon a written commitment by the Hawaii School Facilities Authority (SFA) and/or Project developer that it will be responsible for any and all land disposition documentation and related fees and costs. These fees and costs shall cover all services needed to secure the final disposition of land, including subdivision approval, surveys, applicable taxes and government fees (such as State of Hawaii Conveyance Tax), and recordation with the Land Court and/or Bureau of Conveyances of the State of Hawaii to the satisfaction of the Department.

As an additional condition of its approval, the Department will also require a written commitment by the SFA and Project developer that:

- No future easements, utility corridors, or access routes created for the Project will limit construction, expansion, or operation of the MHS facilities and infrastructure by the Department without the Department's prior written approval. Of particular note, the Department has already disclosed to the SFA that it has a project in design to improve an existing tennis court which is directly adjacent to the proposed Project. The DEA identifies this improvement as an "airnasium." To avoid confusion and misunderstanding, the Department would prefer if the DEA could be revised to identify its project as a "covered play court."
- A 48-stall parking lot which will be displaced as a result of the Project, will be relocated to another location on the MHS campus subject to review and approval by the Department, at no cost or expense to the Department or MHS, and shall be completed, inspected and approved by the Department before any construction of the Project shall commence.

<u>Project Impact on School Operations</u>
The Department will require that a construction management plan be established to minimize noise, dust, and other disruptions, especially during school hours, to avoid interference with student learning and school operations.

The Department also emphasizes the need for clear and durable physical separation between the Project and school operations. As noted in the DEA, the SFA and Project developers will be required to work with the Department on the appropriate installation of a perimeter fence, secured entry, and separate vehicular and pedestrian circulation from the high school campus. This coordination with the Department shall include, but not be limited to:

- The Department's review and approval of final construction drawings to include a campus interface and security plan detailing fencing, access controls, lighting, surveillance considerations, and coordination protocols for school day and after-hour operations;
- The Project property manager/management team's assurance that the Project's residents shall not be allowed to traverse onto the school campus during and after school hours;
- An operations Memorandum of Agreement/Memorandum of Understanding (MOA/MOU - separate from the ground lease) for the Project shall be fully executed concurrently with the

City and County of Honolulu's issuance of a Certificate of Occupancy for the Project. The MOA/MOU shall address:

1. The Project's developer and property manager shall coordinate project activities with MHS administration for after hour events that may affect school operations;
2. After hours coordination for school activities, athletic events, and community events;
3. Emergency planning, including lockdown/evacuation routes;
4. Security and safety measures to minimize and avoid students entering the Project grounds and/or users of the Project entering school grounds; and
5. Parking management, shared-use scheduling, and noise/light considerations.

Traffic Safety, School Access, and Event Operations

Campus safety and security require careful consideration. The Department looks forward to reviewing further details regarding planned safety measures and is interested in how the Project will prevent unauthorized access and safeguard student safety, particularly during school hours. Addressing these physical and operational security measures early in the design process will be essential to the Project's successful integration with the MHS campus.

The DEA should recognize the Department's commitment to the Harm to Students Law (Act 156, Session Laws of Hawaii 2024). Act 156 requires the Department to restrict campus access by individuals found to have inflicted harm on students. Maintaining student safety becomes significantly more complex when non-school functions operate on the same site or in close proximity to the school.

The Department recognizes that the DEA committed considerable amount of time and resources to study the issue of traffic and its impact on school operations, as well as the community at large. Increasing congestion along Meheula Parkway and the loss of existing parking spaces will substantially affect access for MHS students and staff. The DEA's Traffic Impact Analysis Report (TIAR) shows that five intersections along Meheula Parkway were evaluated, with intersection levels of service remaining at LOS C–D under 2030 build conditions. The Project proposes a new independent driveway off Meheula Parkway. The Department requests that the Project developer provide that transition be STOP-controlled, with the Americans with Disabilities Act (ADA) compliant paths, curb ramps with sufficient lighting and a crosswalk to ensure safe walking routes and enhanced crossings to campus, and bus stops.

The DEA's TIAR proposes no intersection improvements, despite school-area conditions and documented pedestrian volumes. The DEA repeatedly labels LOS C–D as "acceptable," but the Department offers that this "acceptable" label does not accurately reflect the realities of school operations. To address specific issues relating to traffic safety, school access, and event operations, the Department will require that the MOA/MOU discussed in the comments above shall also address the following points of concern:

- A Game Day/Event Transportation and Parking Plan, given the community's documented concern about the loss of the existing 48-stall lot used during football/volleyball events. A formal game day/event traffic plan;
- Overflow parking agreements;
- Temporary traffic control staffing for major events;

- Coordination between school operations and the property manager to avoid conflicts between event parking and resident access;
- Construction Traffic Management Plan addressing school day AM/PM peak conflict points, pedestrian safety, and bus circulation;
- No lane closures during school drop off/pick up windows;
- Clearly protected student walking routes during construction;
- Early notification to the Department, school administration, bus operators, and families; and
- Safe staging areas away from school frontages.

The DEA's TIAR evaluated only the standard commuter AM/PM peaks, although the DEA documents midday pedestrian spikes aligned with the MHS bell schedules and student volumes at the Anania and Makaimoimo driveways. The Department requests an addendum to specifically analyze:

- 7:00–7:45 AM student arrival peak;
- Midday 12:30–1:45 PM bell schedule pedestrian surge;
- 2:00–4:00 PM after school peak;
- Queue lengths at both MHS driveways; and
- U-turns, conflicts, and parent pick-up/drop-off movements along Meheula Parkway.

The DEA's TIAR does not propose intersection improvements, even though all study intersections operate at LOS C–D, and student pedestrian volumes are high. The DEA's TIAR describes LOS C–D as "acceptable" but does not consider school-specific safety factors. The Department recommends the evaluation and, if warranted, install:

- Rectangular Rapid Flash Beacons at high volume school crossings;
- High visibility raised crosswalk upgrades at Anania Drive and Makaimoimo Street;
- School hour turn restrictions (e.g., protected lefts, limited right turn on red); and
- Speed management measures on Meheula Parkway, such as school hour 20 mph zones, speed feedback signs, or lane narrowing.

The DEA identifies significant student pedestrian volumes during school peaks and notes a City planned crosswalk upgrade at Hikikaulia Street/Meheula Parkway and proposed protected bike lane improvements along Meheula Parkway. The Department requests:

- Assurance that the project does not interfere or conflict with City's planned upgrades;
- Assurance that the new driveway does not reduce pedestrian/cyclist safety; and
- Additional mid-block lighting, ADA path upgrades, and continuous sidewalks connecting the project and MHS.

The DEA's TIAR recommends STOP control and ADA ramps at the project driveway but provides no analysis of school-related conflicts. The Department requests:

- Sight distance protections (no obstructive landscaping or parking);
- Evaluation of left turn exit restrictions during school traffic peak hours; and
- Coordination to ensure safe merging and crossing movements between MHS users and housing residents.

Finally, the Department requests continued engagement with the Mililani community through public meetings, as well as ongoing communication with the Department and MHS administration. A strong relationship with the education community will be critical to the Project's success.

Should you have any questions, please contact me at (808) 784-5040 or via email at jadine.urasaki@k12.hi.us.

We appreciate the opportunity to comment.

Sincerely,

Jadine Urasaki
Public Works Administrator
Facilities Development Branch

JU:ju
c: Ernest Muh, Complex Area Superintendent, Leilehua-Mililani-Waialua Complex
Frederick Murphy, Principal, Mililani High School
Facilities Development Branch

PBR HAWAII
& ASSOCIATES, INC.

KIMI MIKAMI YUEN, LEED® AP BD+C
President / Chairperson

VINCENT SHIGEKUNI
Executive Vice-President / Principal

GRANT T. MURAKAMI, AICP, LEED® AP BD+C
Executive Vice-President / Principal

CATIE CULLISON, AICP
Senior Vice-President / Principal

TOM SCHNELL, AICP
Vice-President / Principal

MARC SHIMATSU, PLA, ASLA
Vice-President / Principal

RAYMOND T. HIGA, PLA, ASLA
Associate Principal

DACHENG DONG, LEED® AP
Associate Principal

NATHALIE RAZO
Associate Principal

ANN MIKIKO BOUSLOG, PhD
Director of Land Economics & Real Estate

RAMSAY R. M. TAUM
Cultural Sustainability Planner

ETSUYO KILA
Senior Associate

GREG NAKAI
Senior Associate

BRADLEY FURUYA, AICP
Associate

C.R. ʻIMIPONO WICHMAN
Associate

THERESA DEAN
Associate

R. STAN DUNCAN, PLA, ASLA
Chairman Emeritus

RUSSELL Y. J. CHUNG, PLA, FASLA
Principal Emeritus

THOMAS S. WITTEN, FASLA
Principal Emeritus

W. FRANK BRANDT, FASLA
Founding Partner

1001 Bishop Street, Suite 650
Honolulu, Hawaiʻi 96813-3484
Tel: (808) 521-5631
Fax: (808) 523-1402
E-mail: sysadmin@pbrhawaii.com

printed on recycled paper

May 18, 2026

Ms. Jadine Urasaki
Public Works Administrator
State of Hawaiʻi
Department of Education
Facilities Development Branch
P.O. Box 2360
Honolulu, Hawaiʻi 96804

Attn: Ernest Muh, Complex Area Superintendent; Fredrick Murphy, MHS Principal

SUBJECT: HRS CHAPTER 343 DRAFT ENVIRONMENTAL ASSESSMENT (EA) – MILILANI HIGH SCHOOL TEACHER WORKFORCE HOUSING PROJECT, MILILANI, OʻAHU, PORTIONS OF TAX MAP KEYS (TMKs) 9-5-001: 017 AND 054

Dear Ms. Urasaki:

Thank you for your letter (Certified Mail No. 9589 0710 5270 0756 0050 28) dated February 23, 2026, regarding the subject Project. As the planning consultant to Pacific Housing Assistance Corporation (PHAC), which is the developer working with the School Facilities Authority (SFA) on the Mililani High School (MHS) Teacher Workforce Housing Project, we appreciate the Department of Education's (DOE's) recognition of the importance of the proposed Project. Thank you for your thoughtful comments. We offer the following responses:

- **Department Land Ownership and Use of School Property:** Your clarification on the status of land ownership, as well as conditions of approval for land disposition and use of school property, will be included in the Final EA. SFA is currently working with DOE to identify a nearby site on campus to replace the 48-stall parking lot that will be displaced in order to implement the proposed Project. This will be acknowledged in the Final EA. Figure 5b of the Final EA shows the proposed location of the replacement parking within the campus. The proposed replacement parking lot will be paved and have access from a campus driveway. It should be noted that this proposed replacement parking lot will provide access to athletic fields and events. Additionally, as requested, the Final EA will refer to the adjacent MHS project as a "covered play court".
- **Project Impact on School Operations:** A construction management plan will be prepared to minimize impacts on students and school operations. SFA will coordinate with the DOE on the appropriate installation of a perimeter fence, secured entry, and separate vehicular and pedestrian circulation from the high school campus. The DOE's request for a document regarding operations and event coordination, emergency planning, security and safety measures, parking management, and noise/light considerations will be referenced in the Final EA.
- **Traffic Safety, School Access, and Event Operations:** Physical separation will be established between the school and Project with a perimeter fence, and separate and secured vehicular and pedestrian entry points. SFA will continue to coordinate with MHS on appropriate safety and security measures and design features, as well as enforcement of the Harm to Students Law (Act 156, Session Laws of Hawaiʻi 2024). To address concerns regarding the operation of the Project, and to address the request from DPP-TRB, an update to the Transportation Impact Assessment Report (TIAR) will be conducted one year after the Project is in operation.

In addition, we acknowledge your further comments (in *italics* below) and provide the following responses.

Comment: *The Department recognizes that the DEA committed considerable amount of time and resources to study the issue of traffic and its impact on school operations, as well as the community at large. Increasing congestion along Meheula Parkway and the loss of existing parking spaces will substantially affect access for MHS students and staff. The DEA's Traffic Impact Analysis Report (TIAR) shows that five intersections along Meheula Parkway were evaluated, with intersection levels of service remaining at LOS C-D under 2030 build conditions. The Project proposes a new independent driveway off Meheula Parkway. The Department requests that the Project developer provide that transition be STOP-controlled, with the Americans with Disabilities Act (ADA) compliant paths, curb ramps with sufficient lighting and a crosswalk to ensure safe walking routes and enhanced crossings to campus, and bus stops.*

Response: As stated in the TIAR: "It is recommended that STOP-sign-controlled access be installed at the Project driveway. The intersection operates at an acceptable level for the peak hour with just STOP-sign control at the driveway… A crosswalk across the driveway and ADA compliant curb ramps should be installed."

Comment: *The DEA's TIAR proposes no intersection improvements, despite school-area conditions and documented pedestrian volumes. The DEA repeatedly labels LOS C-D as "acceptable," but the Department offers that this "acceptable" label does not accurately reflect the realities of school operations. To address specific issues relating to traffic safety. school access, and event operations, the Department will require that the MOA/MOU discussed in the comments above shall also address the following points of concern:*

- *A Game Day/Event Transportation and Parking Plan, given the community's documented concern about the loss of the existing 48-stall lot used during football/volleyball events. A formal game day/event traffic plan;*
- *Overflow parking agreements;*
- *Temporary traffic control staffing for major events;*
- *Coordination between school operations and the property manager to avoid conflicts between event parking and resident access;*
- *Construction Traffic Management Plan addressing school day AM/PM peak conflict points, pedestrian safety, and bus circulation;*
- *No lane closures during school drop off/pick up windows;*
- *Clearly protected student walking routes during construction;*
- *Early notification to the Department, school administration, bus operators, and families; and*
- *Safe staging areas away from school frontages.*

Response: SFA will work with DOE to address the above points of concern in the operations document and the Construction Traffic Management Plan (CTMP).

Comment: *The DEA's TIAR evaluated only the standard commuter AM/PM peaks, although the DEA documents midday pedestrian spikes aligned with the MHS bell schedules and student volumes at the Anania and Makaimoimo driveways. The Department requests an addendum to specifically analyze:*

- *7:00-7:45 AM student arrival peak;*
- *Midday 12:30-1:45 PM bell schedule pedestrian surge;*
- *2:00-4:00 PM after school peak;*
- *Queue lengths at both MHS driveways; and*
- *U-turns, conflicts, and parent pick-up/drop-off movements along Meheula Parkway.*

Response: The TIAR was prepared in accordance with the City and County of Honolulu standards for Traffic Impact Assessments, which require an evaluation of the second highest peak hour periods. Data was collected from several days and up to 6 hours on each of the study days. The data collection efforts completed on Tuesdays and Thursdays were done from 6:30 AM to 8:30 AM for the morning peak and from 2:00 PM to 6:00 PM during the afternoon peak. On Wednesday, the counts were conducted from 6:30 AM to 8:30 AM, 12:30 PM to 2:00 PM, and 3:00 PM to 6:00 PM. These timeframes should have included the after school/pedestrian surges on each respective day. The peak hour/second highest peak hour was determined with the inclusion of these time periods. The U-turns at the Church driveway were also counted during this data collection period. The TIAR has been updated to include the U-turn volumes at the uncontrolled Meheula Parkway intersection between Anania Drive and Kamehameha Highway. The updated TIAR will be included in the Final EA. According to the Project's traffic engineer, AECOM, an addendum study would fall more in line with a school safety study.

Comment: *The DEA's TIAR does not propose intersection improvements, even though all study intersections operate at LOS C-D, and student pedestrian volumes are high. The DEA's TIAR describes LOS C-D as "acceptable" but does not consider school-specific safety factors. The Department recommends the evaluation and, if warranted, install:*

- *Rectangular Rapid Flash Beacons at high volume school crossings;*
- *High visibility raised crosswalk upgrades at Anania Drive and Makaimoimo Street;*
- *School hour turn restrictions (e.g., protected lefts, limited right turn on red); and*
- *Speed management measures on Meheula Parkway, such as school hour 20 mph zones, speed feedback signs, or lane narrowing.*

Response: According to the Project's traffic engineer, AECOM, the above requests would fall more in line with a school safety study.

Comment: *The DEA identifies significant student pedestrian volumes during school peaks and notes a City planned crosswalk upgrade at Hikikaulia Street/Meheula Parkway and proposed protected bike lane improvements along Meheula Parkway. The Department requests:*

- *Assurance that the project does not interfere or conflict with City's planned upgrades;*
- *Assurance that the new driveway does not reduce pedestrian/cyclist safety; and*
- *Additional mid-block lighting, ADA path upgrades, and continuous sidewalks connecting the project and MHS.*

Response: The Project will not interfere or conflict with the City's planned upgrades. The Project driveway should not negatively affect the safety of pedestrians and bicyclists. Regarding the third bullet point above, the existing street lighting along Meheula Parkway appears to follow standard spacing approximately every 150 feet. Project pedestrian paths will be ADA-compliant and will connect the site to the sidewalk along Meheula Parkway but will be kept separate from the MHS pedestrian circulation by a perimeter fence.

Comment: *The DEA's TIAR recommends STOP control and ADA ramps at the project driveway but provides no analysis of school-related conflicts. The Department requests:*

- *Sight distance protections (no obstructive landscaping or parking);*
- *Evaluation of left turn exit restrictions during school traffic peak hours; and*
- *Coordination to ensure safe merging and crossing movements between MHS users and housing residents.*

Response: The line of sight around the Project driveway will remain clear, with no obstructive landscaping or parking. According to the Project's traffic engineer, AECOM, the analysis completed in the TIAR indicates an acceptable level of service that would not require any turn restrictions.

Comment: *Finally, the Department requests continued engagement with the Mililani community through public meetings, as well as ongoing communication with the Department and MHS administration. A strong relationship with the education community will be critical to the Project's success.*

Response: SFA will continue to engage with the Mililani community, the DOE, and MHS administration throughout the duration of the Project.

We appreciate your comments and recommendations. Your continued support and input are pivotal to the Project. Your email and our response will be reproduced in the forthcoming Final EA.

Sincerely,

PBR HAWAII

Greg Nakai
Senior Associate

cc: Lacey Shimabukuro, PHAC
Karen Arakawa, PHAC

From: sysadmin
To: Greg Nakai
Subject: Fw: CAB Comments: Mililani High School Teacher Workforce Housing – Draft EA (AFNSI)
Date: Monday, January 26, 2026 5:15:17 PM

From: DOH.CABPASS <DOH.CABPASS@doh.hawaii.gov>
Sent: Monday, January 26, 2026 4:27 PM
To: sysadmin <sysadmin@pbrhawaii.com>
Subject: CAB Comments: Mililani High School Teacher Workforce Housing – Draft EA (AFNSI)

Warning: Unusual sender <doh.cabpass@doh.hawaii.gov>
You don't usually receive emails from this address. Make sure you trust this sender before taking any actions.

To Whom It May Concern,
PBR HAWAII & Associates, Inc., Greg Nakai,

Thank you for the opportunity to review the Draft Environmental Assessment and Anticipated Finding of No Significant Impact for the Proposed Mililani High School Teacher Workforce Housing Project, Mililani, O'ahu, Hawai'i Portions of TMKs (1) 9-5-001:017 and 054, published in the January 23, 2026, edition of The Environmental Notice. Please visit the Clean Air Branch (CAB) website to download and reference our Standard Comments for Land Use Reviews. The link is provided below.

https://health.hawaii.gov/cab/clean-air-branch/standard-comments-for-land-use-reviews/

Mahalo,

Katt

Katt Marshall

Planner II | Clean Air Branch (CAB) | Planning & Administrative Support Staff (PASS)
Hawai'i State Department of Health | Ka 'Oihana Olakino
2827 Waimano Home Road #130 | Pearl City, Hawaii 96782
Office: (808) 586-4200

JOSH GREEN, M.D.
GOVERNOR OF HAWAI'I
KE KIA'ĀINA O KA MOKU'ĀINA 'O HAWAI'I

KENNETH S. FINK, MD, MGA, MPH
DIRECTOR OF HEALTH
KA LUNA HO'OKELE

STATE OF HAWAII
DEPARTMENT OF HEALTH
KA 'OIHANA OLAKINO
P.O. Box 3378
HONOLULU, HAWAII 96801-3378

In reply, please refer to:
File:
24-288A CAB

July 3, 2024

MEMORANDUM

TO: Agencies and Project Owners

FROM: MARIANNE ROSSIO, P.E., CHIEF
Clean Air Branch

SUBJECT: Clean Air Branch Standard Project Comments

This memo is provided for your information and sharing. You are encouraged to share this memo with your project partners, team members, and appropriate personnel.

The Department of Health (DOH), Clean Air Branch (CAB), will no longer be responding directly to requests for comments on the following documents (including pre-consultation, early consultation, preparation notice, draft, final, addendums, and/or supplements):

- Environmental Impact Statements (EIS)
- Environmental Assessments (EA)
- Anticipated Finding of No Environmental Significant Impacts (AFONSI)
- Conservation District Use Applications (CDUA)
- Special Management Area Permits (SMAP)

For agencies or project owners requiring DOH-CAB comments on one or more of these documents, please utilize the DOH-CAB Standard Comments below regarding your project's responsibilities to maintain air quality and any necessary permitting. DOH-CAB Standard Comments are also available on the DOH-CAB website located at: https://health.hawaii.gov/cab/files/2024/07/Standard-Comments-for-Land-Use-Reviews-Clean-Air-Branch-July_2024.pdf.

If you have any questions, please the Clean Air Branch at (808) 586-4200.

CH:rkb

Standard Comments for Land Use Reviews
Clean Air Branch
Hawaii State Department of Health
July 3, 2024

All project activities shall comply with Hawaii Administrative Rules (HAR), Chapter 11-59 and 11-60.1.

If your proposed project:

Requires an Air Pollution Control Permit

- You must obtain an air pollution control permit from the Clean Air Branch and comply with all applicable conditions and requirements. If you do not know if you need an air pollution control permit, please contact the Permitting Section of the Clean Air Branch.
- Permit application forms can be found here: https://health.hawaii.gov/cab/permit-application- forms/

Has the potential to generate fugitive dust

- You must reasonably control the generation of all airborne, visible fugitive dust. Note that construction activities that occur near existing residences, businesses, public areas and major thoroughfares exacerbate potential dust concerns. It is recommended that a dust control management plan be developed which identifies and mitigates all activities that may generate airborne, visible fugitive dust. The plan, which does *not* require Department of Health approval, should help you recognize and minimize potential airborne, visible fugitive dust problems.
- Construction activities must comply with the provisions of Hawaii Administrative Rules, §11- 60.1-33 on Fugitive Dust. In addition, for cases involving mixed land use, it is strongly recommended that buffer zones be established, wherever possible, in order to alleviate potential dust concerns.
- You must provide reasonable measures to control airborne, visible fugitive dust from the road areas and during the various phases of construction. These measures include, but are not limited to, the following:
    - Planning the different phases of construction, focusing on minimizing the amount of airborne, visible fugitive dust-generating materials and activities, centralizing on-site vehicular traffic routes, and locating potential dust-generating equipment in areas of the least impact;
    - Providing an adequate water source at the site prior to start-up of construction activities;
    - Landscaping and providing rapid covering of bare areas, including slopes, starting from the initial grading phase;
    - Minimizing airborne, visible fugitive dust from shoulders and access roads;
    - Providing reasonable dust control measures during weekends, after hours, and prior to daily start-up of construction activities; and
    - Controlling airborne, visible fugitive dust from debris being hauled away from the project site.
- If you have questions about fugitive dust, please contact the Enforcement Section of the Clean Air Branch. Please also see fugitive dust fact sheet at: https://health.hawaii.gov/cab/files/2024/02/Hawaii-Fugitive-Dust-Fact-Sheet-February-2024.pdf.

Includes construction, demolition, or renovation activities that involve potential asbestos and lead containing materials

- Please contact the Indoor and Radiological Health Branch at (808) 586-4700 or visit: https://health.hawaii.gov/irhb/

Increases the population and potential number of vehicles in an area

- The creation of apartment buildings, complexes, and residential communities may increase the overall population in an area. Increasing the population in an area may inadvertently lead to more air pollution via vehicle exhaust. Vehicle exhaust releases pollutants in the air that can negatively impact human health and air quality, including lung irritants, carcinogens, and greenhouse gases.
- Ensure that drivers keep vehicle idling times to three (3) minutes or less.
- Consider and incorporate support for alternative transportation options such as bike racks and/or electric vehicle charging stations where possible.

If you have any questions, please contact the Clean Air Branch at (808) 586-4200 or at cab@doh.hawaii.gov.

PBR HAWAII
& ASSOCIATES, INC.

KIMI MIKAMI YUEN, LEED® AP BD+C
President / Chairperson

VINCENT SHIGEKUNI
Executive Vice-President / Principal

GRANT T. MURAKAMI, AICP, LEED® AP BD+C
Executive Vice-President / Principal

CATIE CULLISON, AICP
Senior Vice-President / Principal

TOM SCHNELL, AICP
Vice-President / Principal

MARC SHIMATSU, PLA, ASLA
Vice-President / Principal

RAYMOND T. HIGA, PLA, ASLA
Associate Principal

DACHENG DONG, LEED® AP
Associate Principal

NATHALIE RAZO
Associate Principal

ANN MIKIKO BOUSLOG, PhD
Director of Land Economics & Real Estate

RAMSAY R. M. TAUM
Cultural Sustainability Planner

ETSUYO KILA
Senior Associate

GREG NAKAI
Senior Associate

BRADLEY FURUYA, AICP
Associate

C.R. 'IMIPONO WICHMAN
Associate

THERESA DEAN
Associate

R. STAN DUNCAN, PLA, ASLA
Chairman Emeritus

RUSSELL Y. J. CHUNG, PLA, FASLA
Principal Emeritus

THOMAS S. WITTEN, FASLA
Principal Emeritus

W. FRANK BRANDT, FASLA
Founding Partner

1001 Bishop Street, Suite 650
Honolulu, Hawai'i 96813-3484
Tel: (808) 521-5631
Fax: (808) 523-1402
E-mail: sysadmin@pbrhawaii.com

printed on recycled paper

May 18, 2026

Ms. Katt Marshall
Planner II
State of Hawai'i
Department of Health
Clean Air Branch
2827 Waimano Home Road #130
Pearl City, HI 96782-1487

SUBJECT: HRS CHAPTER 343 DRAFT ENVIRONMENTAL ASSESSMENT (EA) – MILILANI HIGH SCHOOL TEACHER WORKFORCE HOUSING PROJECT, MILILANI, O'AHU, PORTIONS OF TAX MAP KEYS (TMKs) 9-5-001: 017 AND 054

Dear Ms. Marshall:

Thank you for your email dated January 26, 2026, regarding the subject Project. As the planning consultant to Pacific Housing Assistance Corporation (PHAC), which is the developer working with the School Facilities Authority on the Mililani High School Teacher Workforce Housing Project, we have reviewed the Clean Air Branch's standard comments and offer the following responses:

- Air Pollution Control Permit: Not applicable. As the Project is not a stationary source that is considered a major source of air emissions, an Air Pollution Control Permit is not anticipated to be required.
- Fugitive Dust: All construction activities will comply with all applicable federal, state, and county regulations and rules for fugitive dust.
- Asbestos and Lead: It is not anticipated that construction, demolition, or renovation activities will involve potential asbestos or lead containing materials. However, should such materials be encountered, the Indoor and Radiological Health Branch will be contacted.
- Air Pollution from Vehicle Exhaust: Due to the Project's proximity to major retail and business centers, and plans to incentivize alternative modes of travel, the number of vehicles in the area is not expected to increase at a rate that will result in significant air pollution.

We value your participation in the environmental review process. Your email and our response will be reproduced in the forthcoming Final EA.

Sincerely,

PBR HAWAII

Greg Nakai
Senior Associate

cc: Lacey Shimabukuro, PHAC
Karen Arakawa, PHAC

From: sysadmin
To: Greg Nakai
Subject: Fw: Subject: DOH-WWB Response to the DEA for Mililani H.S. Teacher Workforce Housing Project
Date: Friday, January 30, 2026 11:59:24 AM
Attachments: LUD-WWB-StandardProjectComments-2024-12-26.pdf

From: Morikami, Lori <lori.morikami@doh.hawaii.gov>
Sent: Friday, January 30, 2026 10:40 AM
To: riki.fujitani@hisfa.org <riki.fujitani@hisfa.org>; sysadmin <sysadmin@pbrhawaii.com>
Subject: Subject: DOH-WWB Response to the DEA for Mililani H.S. Teacher Workforce Housing Project

Warning: Unusual sender <lori.morikami@doh.hawaii.gov>
You don't usually receive emails from this address. Make sure you trust this sender before taking any actions.

Good morning Sirs / Madames:

Subject: DEA and Anticipated Finding of No Significant Impact for Mililani High School Teacher Workforce Housing Project Mililani, Oahu, Hawaii, Portions of TMKs: (1) 9-5-001: 017 and 054

(95-475 Meheula Parkway, Mililani, Oahu, 96789)

Thank you for allowing us to review and comment the above subject project.

Please refer to the Standard Land Use Comments attached in pdf for your review.
Should you have any questions, please email the Planning & Design Supervisor, Mark Tomomitsu at mark.tomomitsu@doh.hawaii.gov

As this project is sewered, we have no objections. Please ensure that all wastewater plans will conform to applicable provisions of the Hawaii Administrative Rules, Chapter 11-62, "Wastewater Systems."

Mahalo,
On behalf of Jonathan Nagato, P.E., Branch Chief
Wastewater Branch, Hawaii Department of Health
Be Healthy & Safe and Be Hawaii Strong!

Mahalo,
Lori Morikami
Planner | Env. Mgmt. Div. | Wastewater Branch (PD)
Hawaii State Department of Health | Ka ʻOihana Olakino
2827 Waimano Home Road Room 207 | Pearl City | Hawaii 96782-1487
Office (808) 586-4294 | Website: https://health.hawaii.gov/wastewater/

CONFIDENTIALITY NOTICE: This mail message (and attachments) is for the sole use of the intended recipient(s). If may contain confidential and/or privileged information. It might also be protected from disclosure under the Hawaii Uniform Information Practice Act (UIPA) or other laws and regulations. Review, use, disclosure, or distribution by unintended recipients is prohibited. If you are not the intended recipient, please contact the sender immediately in a separate e-mail and destroy the original message and any copies.

JOSH GREEN, M.D.
GOVERNOR OF HAWAI'I
KE KIA'ĀINA O KA MOKU'ĀINA 'O HAWAI'I

KENNETH S. FINK, MD, MGA, MPH
DIRECTOR OF HEALTH
KA LUNA HO'OKELE

STATE OF HAWAI'I
DEPARTMENT OF HEALTH
KA 'OIHANA OLAKINO
P. O. BOX 3378
HONOLULU, HI 96801-3378

In reply, please refer to:
File:

December 26, 2024

MEMORANDUM

SUBJECT: Wastewater Branch Standard Project Comments

TO: Agencies and Project Owners

FROM: JONATHAN NAGATO, P.E., CHIEF
Wastewater Branch

This memo is provided for your information and sharing. You are encouraged to share this memo with your project partners, team members, and appropriate personnel.

The Department of Health (DOH), Wastewater Branch (WWB) will no longer be responding directly to requests for comments on the following documents (Pre-consultation, Early Consultation, Preparation Notice, Draft, Final, Addendums, and/or Supplements), including but not limited to:

- Environmental Impact Statements (EIS)
- Environmental Assessments (EA)
- Conservation District Use Applications (CDUA)
- Special Management Area Permits (SMAP)
- Special Use Permit
- Shoreline Setback Areas (SSA)

For agencies or project owners requiring DOH-WWB comments for one or more of these documents, please utilize the DOH-WWB Standard Comments below regarding your project's responsibilities to maintain proper treatment and disposal of wastewater and any necessary permitting. DOH-WWB Standard Comments are also available on the DOH-WWB website located at: http://health.hawaii.gov/wastewater/.

DOH-WWB Standard Comments

The following information is for agencies and/or project owners who are seeking comments regarding environmental compliance for their projects with the Hawaii Administrative Rules (HAR), Chapter 11-62. You may be responsible for fulfilling additional requirements related to our program such as Board of Water Supply's pass and no-pass zones, Safe Drinking Water Branch's underground injection control program, etc.

1. As the project will be served by the City & County of Honolulu/ County/ Private sewer system, we have no objections to the project.

2. Per HAR, Ch. 11-62 section 11-62-05, all areas of the State are critical wastewater disposal areas. All wastewater systems must conform to applicable provisions of HAR, Ch. 11-62. We do reserve the right to review the detailed wastewater plans for conformance to applicable rules. Design plans should address any effect associated with the construction of and/or discharges from the wastewater systems to any public trust, Native Hawaiian resources or the exercise of traditional cultural practices.

3. Large Capacity Cesspools (LCC):

   In 1999, EPA promulgated regulations under the Safe Drinking Water Act's Underground Injection Control (UIC) Program required closure of all existing large capacity cesspools (LCC) by April 5, 2005. Under federal regulations, a large capacity cesspool is a cesspool which serves multiple residential units, serves a mixed use of a residential and non-residential activity, or for nonresidential facilities has the potential to serve 20 or more persons per day. Operation of a large capacity cesspool after this date is a violation of federal regulations and subject to enforcement and fines. If you have any questions about LCC, please contact the Region 9 LLC Coordinator at r9_lcc_coordinator@epa.gov.

PBR HAWAII
& ASSOCIATES, INC.

KIMI MIKAMI YUEN, LEED® AP BD+C
President / Chairperson

VINCENT SHIGEKUNI
Executive Vice-President / Principal

GRANT T. MURAKAMI, AICP, LEED® AP BD+C
Executive Vice-President / Principal

CATIE CULLISON, AICP
Senior Vice-President / Principal

TOM SCHNELL, AICP
Vice-President / Principal

MARC SHIMATSU, PLA, ASLA
Vice-President / Principal

RAYMOND T. HIGA, PLA, ASLA
Associate Principal

DACHENG DONG, LEED® AP
Associate Principal

NATHALIE RAZO
Associate Principal

ANN MIKIKO BOUSLOG, PhD
Director of Land Economics & Real Estate

RAMSAY R. M. TAUM
Cultural Sustainability Planner

ETSUYO KILA
Senior Associate

GREG NAKAI
Senior Associate

BRADLEY FURUYA, AICP
Associate

C.R. 'IMIPONO WICHMAN
Associate

THERESA DEAN
Associate

R. STAN DUNCAN, PLA, ASLA
Chairman Emeritus

RUSSELL Y. J. CHUNG, PLA, FASLA
Principal Emeritus

THOMAS S. WITTEN, FASLA
Principal Emeritus

W. FRANK BRANDT, FASLA
Founding Partner

May 18, 2026

Mr. Jonathan Nagato. P.E.
Branch Chief
State of Hawai'i
Department of Health
Wastewater Branch
2827 Waimano Home Road #207
Pearl City, HI 96782-1487

Attn: Lori Morikami and Mark Tomomitsu, Planning and Design Supervisor

SUBJECT: HRS CHAPTER 343 DRAFT ENVIRONMENTAL ASSESSMENT (EA) – MILILANI HIGH SCHOOL TEACHER WORKFORCE HOUSING PROJECT, MILILANI, O'AHU, PORTIONS OF TAX MAP KEYS (TMKs) 9-5-001: 017 AND 054

Dear Mr. Nagato:

Thank you for Ms. Morikami's email dated January 30, 2026, regarding the subject Project. As the planning consultant to Pacific Housing Assistance Corporation (PHAC), which is then developer working with the School Facilities Authority on the Mililani High School Teacher Workforce Housing Project, we appreciate your comments that since the project will connect to the municipal sewer system, Department of Health has no objections. Please note that the Project wastewater system will conform to applicable provisions of the Hawai'i Administrative Rules, Chapter 11-62, and will not involve the operation of a Large Capacity Cesspool.

We value your participation in the environmental review process. Your email and our response will be reproduced in the forthcoming Final EA.

Sincerely,

PBR HAWAII

Greg Nakai
Senior Associate

cc: Lacey Shimabukuro, PHAC
Karen Arakawa, PHAC

1001 Bishop Street, Suite 650
Honolulu, Hawai'i 96813-3484
Tel: (808) 521-5631
Fax: (808) 523-1402
E-mail: sysadmin@pbrhawaii.com

printed on recycled paper

From: sysadmin
To: Greg Nakai
Subject: Fw: MILILANI HIGH SCHOOL TEACHER WORKFORCE HOUSING, MILILANI, OAHU, EWA
Date: Tuesday, February 3, 2026 4:44:21 PM

From: Thirugnanam, Jeyan <jeyan.thirugnanam@hawaii.gov>
Sent: Tuesday, February 3, 2026 2:03 PM
To: sysadmin <sysadmin@pbrhawaii.com>
Subject: Fw: MILILANI HIGH SCHOOL TEACHER WORKFORCE HOUSING, MILILANI, OAHU, EWA

Warning: Unusual sender <jeyan.thirugnanam@hawaii.gov>
You don't usually receive emails from this address. Make sure you trust this sender before taking any actions.

Aloha,

HDOT Highways has no comments on the DEA.

Mahalo,
Jeyan Thirugnanam
HDOT Highways Land Use Permits Review

PBR HAWAII
& ASSOCIATES, INC.

KIMI MIKAMI YUEN, LEED® AP BD+C
President / Chairperson

VINCENT SHIGEKUNI
Executive Vice-President / Principal

GRANT T. MURAKAMI, AICP, LEED® AP BD+C
Executive Vice-President / Principal

CATIE CULLISON, AICP
Senior Vice-President / Principal

TOM SCHNELL, AICP
Vice-President / Principal

MARC SHIMATSU, PLA, ASLA
Vice-President / Principal

RAYMOND T. HIGA, PLA, ASLA
Associate Principal

DACHENG DONG, LEED® AP
Associate Principal

NATHALIE RAZO
Associate Principal

ANN MIKIKO BOUSLOG, PhD
Director of Land Economics & Real Estate

RAMSAY R. M. TAUM
Cultural Sustainability Planner

ETSUYO KILA
Senior Associate

GREG NAKAI
Senior Associate

BRADLEY FURUYA, AICP
Associate

C.R. 'IMIPONO WICHMAN
Associate

THERESA DEAN
Associate

R. STAN DUNCAN, PLA, ASLA
Chairman Emeritus

RUSSELL Y. J. CHUNG, PLA, FASLA
Principal Emeritus

THOMAS S. WITTEN, FASLA
Principal Emeritus

W. FRANK BRANDT, FASLA
Founding Partner

May 18, 2026

Mr. Ed Sniffen
Director
State of Hawai'i
Department of Transportation
869 Punchbowl Street, Room 509
Honolulu, HI 96813

Attn: Jeyan Thirugnanam, Highways Land Use Permits Review

SUBJECT: HRS CHAPTER 343 DRAFT ENVIRONMENTAL ASSESSMENT (EA) – MILILANI HIGH SCHOOL TEACHER WORKFORCE HOUSING PROJECT, MILILANI, O'AHU, PORTIONS OF TAX MAP KEYS (TMKs) 9-5-001: 017 AND 054

Dear Mr. Sniffen:

Thank you for Mr. Thirugnanam's email dated February 3, 2026, regarding the subject Project. As the planning consultant to Pacific Housing Assistance Corporation (PHAC), which is the developer working with the School Facilities Authority on the Mililani High School Teacher Workforce Housing Project, we acknowledge that the HDOT Highways Division has no comments on the Draft EA.

We value your participation in the environmental review process. Department of Transportation's email and our response will be reproduced in the forthcoming Final EA.

Sincerely,

PBR HAWAII

Greg Nakai
Senior Associate

cc: Lacey Shimabukuro, PHAC
Karen Arakawa, PHAC

1001 Bishop Street, Suite 650
Honolulu, Hawai'i 96813-3484
Tel: (808) 521-5631
Fax: (808) 523-1402
E-mail: sysadmin@pbrhawaii.com

printed on recycled paper

DEPARTMENT OF DESIGN AND CONSTRUCTION
KA 'OIHANA HAKULAU A ME KE KĀPILI
CITY AND COUNTY OF HONOLULU

650 SOUTH KING STREET, 11TH FLOOR • HONOLULU, HAWAI'I 96813
PHONE: (808) 768-8480 • FAX: (808) 768-4567 • WEBSITE: honolulu.gov

RICK BLANGIARDI
MAYOR
MEIA

HAKU MILLES, P.E.
DIRECTOR
PO'O

MARK YONAMINE, P.E.
DEPUTY DIRECTOR
HOPE PO'O

February 5, 2026

SENT VIA EMAIL

Riki Fujitani
Riki.fujitani@hisfa.org

Greg Nakai
sysadmin@pbrhawaii.com

Dear Messrs. Fujitani and Nakai:

Subject: Draft Environmental Assessment for Mililani High School Teacher Workforce Housing Project

Thank you for the opportunity to review and comment. The Department of Design and Construction has no comments to offer at this time.

Should you have any questions, please contact me at (808) 768-8480.

Sincerely,

Haku Milles, P.E., LEED AP
Director

HM:krn (950019)

PBR HAWAII
& ASSOCIATES, INC.

KIMI MIKAMI YUEN, LEED® AP BD+C
President / Chairperson

VINCENT SHIGEKUNI
Executive Vice-President / Principal

GRANT T. MURAKAMI, AICP, LEED® AP BD+C
Executive Vice-President / Principal

CATIE CULLISON, AICP
Senior Vice-President / Principal

TOM SCHNELL, AICP
Vice-President / Principal

MARC SHIMATSU, PLA, ASLA
Vice-President / Principal

RAYMOND T. HIGA, PLA, ASLA
Associate Principal

DACHENG DONG, LEED® AP
Associate Principal

NATHALIE RAZO
Associate Principal

ANN MIKIKO BOUSLOG, PhD
Director of Land Economics & Real Estate

RAMSAY R. M. TAUM
Cultural Sustainability Planner

ETSUYO KILA
Senior Associate

GREG NAKAI
Senior Associate

BRADLEY FURUYA, AICP
Associate

C.R. 'IMIPONO WICHMAN
Associate

THERESA DEAN
Associate

R. STAN DUNCAN, PLA, ASLA
Chairman Emeritus

RUSSELL Y. J. CHUNG, PLA, FASLA
Principal Emeritus

THOMAS S. WITTEN, FASLA
Principal Emeritus

W. FRANK BRANDT, FASLA
Founding Partner

May 18, 2026

Mr. Haku Milles, P.E., LEED AP
Director
City and County of Honolulu
Department of Design and Construction
650 South King Street, 11th Floor
Honolulu, Hawai'i 96813

SUBJECT: HRS CHAPTER 343 DRAFT ENVIRONMENTAL ASSESSMENT (EA) – MILILANI HIGH SCHOOL TEACHER WORKFORCE HOUSING PROJECT, MILILANI, O'AHU, PORTIONS OF TAX MAP KEYS (TMKs) 9-5-001: 017 AND 054

Dear Mr. Milles:

Thank you for your letter via email dated February 5, 2026, regarding the subject Project. As the planning consultant to Pacific Housing Assistance Corporation (PHAC), which is the developer working with the School Facilities Authority on the Mililani High School Teacher Workforce Housing Project, we acknowledge that the Department of Design and Construction has no comments to offer at this time.

We value your participation in the environmental review process. Your email and our response will be reproduced in the forthcoming Final EA.

Sincerely,

PBR HAWAII

Greg Nakai
Senior Associate

cc: Lacey Shimabukuro, PHAC
Karen Arakawa, PHAC

1001 Bishop Street, Suite 650
Honolulu, Hawai'i 96813-3484
Tel: (808) 521-5631
Fax: (808) 523-1402
E-mail: sysadmin@pbrhawaii.com

printed on recycled paper

DEPARTMENT OF ENVIRONMENTAL SERVICES
KA 'OIHANA LAWELAWE KAIĀPUNI
CITY AND COUNTY OF HONOLULU

1000 ULU'ŌHI'A STREET, SUITE 308 • KAPOLEI, HAWAI'I 96707
PHONE: (808) 768-3486 • FAX: (808) 768-3487 • WEBSITE: honolulu.gov

RICK BLANGIARDI
MAYOR
MEIA

ROGER BABCOCK, JR., Ph.D., P.E.
DIRECTOR
PO'O

DANIEL BRIECK, P.E.
DEPUTY DIRECTOR
HOPE PO'O

IN REPLY REFER TO:
PRO 26-007

February 9, 2026

SENT VIA EMAIL

Mr. Greg Nakai, Senior Associate
PBR HAWAII & Associates, Inc.
sysadmin@pbrhawaii.com

Riki Fujitani
Hawai'i School Facilities Authority
State of Hawai'i
riki.fujitani@hisfa.org

Dear Mr. Nakai and Riki Fujitani:

SUBJECT: Comment on Draft Environmental Assessment (DEA) for Construction of the Proposed Mililani High School Teacher Workforce Housing

We have reviewed your letter dated January 21, 2026. The Department of Environmental Services has no comment. You may remove us as a consulted party for the balance of the EA process.

Should you have any questions, please contact Nannette Tong, Engineering Support Technician, at (808) 768-3465.

Sincerely,

Roger Babcock, Jr., Ph.D., P.E.
Director

PBR HAWAII
& ASSOCIATES, INC.

KIMI MIKAMI YUEN, LEED® AP BD+C
President / Chairperson

VINCENT SHIGEKUNI
Executive Vice-President / Principal

GRANT T. MURAKAMI, AICP, LEED® AP BD+C
Executive Vice-President / Principal

CATIE CULLISON, AICP
Senior Vice-President / Principal

TOM SCHNELL, AICP
Vice-President / Principal

MARC SHIMATSU, PLA, ASLA
Vice-President / Principal

RAYMOND T. HIGA, PLA, ASLA
Associate Principal

DACHENG DONG, LEED® AP
Associate Principal

NATHALIE RAZO
Associate Principal

ANN MIKIKO BOUSLOG, PhD
Director of Land Economics & Real Estate

RAMSAY R. M. TAUM
Cultural Sustainability Planner

ETSUYO KILA
Senior Associate

GREG NAKAI
Senior Associate

BRADLEY FURUYA, AICP
Associate

C.R. ʻIMIPONO WICHMAN
Associate

THERESA DEAN
Associate

R. STAN DUNCAN, PLA, ASLA
Chairman Emeritus

RUSSELL Y. J. CHUNG, PLA, FASLA
Principal Emeritus

THOMAS S. WITTEN, FASLA
Principal Emeritus

W. FRANK BRANDT, FASLA
Founding Partner

May 18, 2026

Mr. Roger Babcock, Jr., Ph.D, P.E.
Director
City and County of Honolulu
Department of Environmental Services
1000 Ulu‘ōhi‘a Street, Suite 308
Kapolei, Hawai‘i 96707

Attn: Nannette Tong, Engineering Support Technician

SUBJECT: HRS CHAPTER 343 DRAFT ENVIRONMENTAL ASSESSMENT (EA) – MILILANI HIGH SCHOOL TEACHER WORKFORCE HOUSING PROJECT, MILILANI, O‘AHU, PORTIONS OF TAX MAP KEYS (TMKs) 9-5-001: 017 AND 054

Dear Mr. Babcock:

Thank you for your letter via email dated February 9, 2026, regarding the subject Project. As the planning consultant to Pacific Housing Assistance Corporation (PHAC), which is the developer working with the School Facilities Authority on the Mililani High School Teacher Workforce Housing Project, we acknowledge that your department has no comment. As requested, we will remove the Department of Environmental Services as a consulted party for the rest of the EA process.

We value your participation in the environmental review process. Your email and our response will be reproduced in the forthcoming Final EA.

Sincerely,

PBR HAWAII

Greg Nakai
Senior Associate

cc: Lacey Shimabukuro, PHAC
Karen Arakawa, PHAC

1001 Bishop Street, Suite 650
Honolulu, Hawai‘i 96813-3484
Tel: (808) 521-5631
Fax: (808) 523-1402
E-mail: sysadmin@pbrhawaii.com

printed on recycled paper

DEPARTMENT OF FACILITY MAINTENANCE
KA ʻOIHANA MĀLAMA HALE
CITY AND COUNTY OF HONOLULU

1000 ULUʻŌHIʻA STREET, SUITE 215, KAPOLEI, HAWAIʻI 96707
PHONE: (808) 768-3343 • Fax: (808) 768-3381 • WEBSITE: honolulu.gov

RICK BLANGIARDI
MAYOR
MEIA

GENE C. ALBANO, P.E.
DIRECTOR AND CHIEF ENGINEER
PO'O A ME LUNA NUI 'ENEKINIA

WARREN K. MAMIZUKA
DEPUTY DIRECTOR
HOPE PO'O

IN REPLY REFER TO:
DRM 26-051

February 13 , 2026

PBR Hawaii & Associates
Attn: Mr. Greg Nakai, Senior Associate
1001 Bishop Street, Suite 650
Honolulu, Hawaiʻi 96813

Dear Mr. Nakai:

Subject: Notice of Availability
Draft Environmental Assessment
Mililani High School Teacher Workforce Housing

Thank you for the opportunity to review and comment on the subject project.

We have no comments to offer at this time.

If you have any questions, please call Mr. Ray Jyo of the Division of Road Maintenance at (808) 768-8397.

Sincerely,

Gene C. Albano, P.E.
Director and Chief Engineer

PBR HAWAII
& ASSOCIATES, INC.

KIMI MIKAMI YUEN, LEED® AP BD+C
President / Chairperson

VINCENT SHIGEKUNI
Executive Vice-President / Principal

GRANT T. MURAKAMI, AICP, LEED® AP BD+C
Executive Vice-President / Principal

CATIE CULLISON, AICP
Senior Vice-President / Principal

TOM SCHNELL, AICP
Vice-President / Principal

MARC SHIMATSU, PLA, ASLA
Vice-President / Principal

RAYMOND T. HIGA, PLA, ASLA
Associate Principal

DACHENG DONG, LEED® AP
Associate Principal

NATHALIE RAZO
Associate Principal

ANN MIKIKO BOUSLOG, PhD
Director of Land Economics & Real Estate

RAMSAY R. M. TAUM
Cultural Sustainability Planner

ETSUYO KILA
Senior Associate

GREG NAKAI
Senior Associate

BRADLEY FURUYA, AICP
Associate

C.R. ʻIMIPONO WICHMAN
Associate

THERESA DEAN
Associate

R. STAN DUNCAN, PLA, ASLA
Chairman Emeritus

RUSSELL Y. J. CHUNG, PLA, FASLA
Principal Emeritus

THOMAS S. WITTEN, FASLA
Principal Emeritus

W. FRANK BRANDT, FASLA
Founding Partner

May 18, 2026

Mr. Gene C. Albano, P.E.
Director and Chief Engineer
City and County of Honolulu
Department of Facility Maintenance
1000 Ulu‘ōhi‘a Street, Suite 215
Kapolei, Hawai‘i 96707

Attn: Mr. Ray Jyo, Division of Road Maintenance

SUBJECT: HRS CHAPTER 343 DRAFT ENVIRONMENTAL ASSESSMENT (EA) – MILILANI HIGH SCHOOL TEACHER WORKFORCE HOUSING PROJECT, MILILANI, O‘AHU, PORTIONS OF TAX MAP KEYS (TMKs) 9-5-001: 017 AND 054

Dear Mr. Albano:

Thank you for your letter dated February 13, 2026, regarding the subject Project. As the planning consultant to Pacific Housing Assistance Corporation (PHAC), which is the developer working with the School Facilities Authority on the Mililani High School Teacher Workforce Housing Project, we acknowledge that your department has no comments to offer at this time.

We value your participation in the environmental review process. Your email and our response will be reproduced in the forthcoming Final EA.

Sincerely,

PBR HAWAII

Greg Nakai
Senior Associate

cc: Lacey Shimabukuro, PHAC
Karen Arakawa, PHAC

1001 Bishop Street, Suite 650
Honolulu, Hawai‘i 96813-3484
Tel: (808) 521-5631
Fax: (808) 523-1402
E-mail: sysadmin@pbrhawaii.com

printed on recycled paper

DEPARTMENT OF PLANNING AND PERMITTING
KA ʻOIHANA HOʻOLĀLĀ A ME NĀ PALAPALA ʻAE
CITY AND COUNTY OF HONOLULU

650 SOUTH KING STREET, 7TH FLOOR • HONOLULU, HAWAIʻI 96813
PHONE: (808) 768-8000 • FAX: (808) 768-6041 • WEBSITE: honolulu.gov/dpp

RICK BLANGIARDI
MAYOR
MEIA

DAWN TAKEUCHI APUNA
DIRECTOR
PO'O

BRYAN GALLAGHER, P.E.
DEPUTY DIRECTOR
HOPE PO'O

REGINA MALEPEAI
2ND DEPUTY DIRECTOR
HOPE PO'O KUALUA

February 23, 2026

GEN-2026-40 (DC)

Mr. Greg Nakai
PBR HAWAII & Associates, Inc.
1001 Bishop Street, Suite 650
Honolulu, Hawaiʻi 96813

Dear Mr. Nakai:

SUBJECT: Draft Environmental Assessment (EA)
Mililani High School Teacher Workforce Housing Project
95-1200 Meheula Parkway – Mililani
Tax Map Key 9-5-001: 054

This is in response to your letter, received January 26, 2026, requesting the Department of Planning and Permitting (DPP) provide comments on the Draft EA, as required under Chapter 343, Hawaiʻi Revised Statutes (HRS) for the proposed Mililani High School Teacher Workforce Housing. The State of Hawaiʻi School Facilities Authority proposes to develop on a 1.7-acre portion of a 26.432-acre zoning lot. The site is within the R-5 Residential District (R-5 District) and the State Land Use Urban District. The proposed work includes the construction of 95 new multi-unit dwellings for rent (Project). To allow development of the Project, the Applicant will request for exemptions from certain ordinances, rules relating to planning and zoning, and permit fees through the HRS Chapter 201 process.

The DPP has the following comments to include in the Final EA.

1. **Parking Demand Study**: A parking demand study was requested by the Mililani Neighborhood Board No. 25 and the City and County Department of Transportation. A parking demand study was not included in the Draft EA. The proposed Project includes 156 off-street parking spaces and no bicycle parking, even though multiple bike lanes are proposed for the area. DPP requests that a parking demand study be conducted. The Final EA should incorporate the results of the parking demand study.

2. **Surrounding Area Information**: On February 13, 2026, a Zoning Waiver for an enclosure over the nearby tennis court was approved (File No. 2025-W-29). The

subject housing Project is approximately 30 feet from the new structure. There is no mention of the new structure over the Mililani High School tennis court in the Draft EA. The Final EA should be updated to include accurate information about the surroundings. This includes all other foreseeable projects within the vicinity.

3. **Traffic Impact Analysis Report (TIAR)**: The following is a list of recommendations to shore up gaps in the January 2026 TIAR:

   a. Before submitting building permits (BP), a timeline or phasing plan of the anticipated dates to obtain major BPs for construction work must be submitted. The timeline should identify when the construction management plan (CMP), the traffic management plan (TMP), and updates and/or validation to the findings of the initial TIAR will be submitted for review and approval.

   b. The CMP should identify the type, frequency, and routing of heavy trucks and construction-related vehicles.

   c. A TMP should be prepared in an effort to minimize the number of vehicle trips for daily activities by residents. The TMP should propose traffic demand management (TDM) strategies, such as carpooling, ride sharing, public transit, and bicycle incentives.

   d. Updates to the TIAR will be required one year after the issuance of the certificate of occupancy, to validate the traffic projections, trip reduction rates, distribution, and assignment contained in the initial TIAR. If additional traffic mitigation measures or modifications are necessary to address traffic impacts directly attributable to this development, the applicant will be required to implement them. The TIAR updates should also include an evaluation of the relative effectiveness of the TDM strategies, making sure that the trip reduction rates are valid.

   e. Construction plans for all work within or affecting the public streets should be submitted for review and approval. The Traffic control plans during construction should also be submitted for review and approval.

   f. The minimum driveway width for two-way traffic is 20 feet. Adequate vehicular sight distance must be provided and maintained at all driveways to pedestrians and other vehicles. Driveway grades shall not exceed five percent for a minimum distance of 25 feet from the back of the designated pedestrian walkway.

g. All loading and trash pick-up areas should be designed such that vehicles enter and exit front first. All trash pick-up activities should be done on-site. Provide adequate on-site turn-around areas and ensure that the layout of parking spaces in the loading/delivery area does not interfere with turning maneuvers for large vehicles.

h. Pedestrian walkways should lead to pedestrian crossings.

i. Bicycle parking should be located in a safe and convenient location.

j. The left turn lane from Meheula Parkway to the Project site should meet all applicable standards. All turning movements should be analyzed and any modifications to the existing median to be done to provide for all movements as needed.

Thank you for the opportunity to comment. Should you have any other questions, please contact David Cholak, of the Zoning Regulations and Permits Branch, at (808) 768-8026 or via email at david.cholak@honolulu.gov.

Very truly yours,

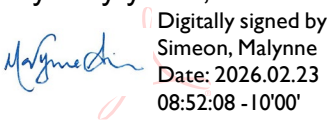

For: Dawn Takeuchi Apuna
Director

PBR HAWAII
& ASSOCIATES, INC.

KIMI MIKAMI YUEN, LEED® AP BD+C
President / Chairperson

VINCENT SHIGEKUNI
Executive Vice-President / Principal

GRANT T. MURAKAMI, AICP, LEED® AP BD+C
Executive Vice-President / Principal

CATIE CULLISON, AICP
Senior Vice-President / Principal

TOM SCHNELL, AICP
Vice-President / Principal

MARC SHIMATSU, PLA, ASLA
Vice-President / Principal

RAYMOND T. HIGA, PLA, ASLA
Associate Principal

DACHENG DONG, LEED® AP
Associate Principal

NATHALIE RAZO
Associate Principal

ANN MIKIKO BOUSLOG, PhD
Director of Land Economics & Real Estate

RAMSAY R. M. TAUM
Cultural Sustainability Planner

ETSUYO KILA
Senior Associate

GREG NAKAI
Senior Associate

BRADLEY FURUYA, AICP
Associate

C.R. ʻIMIPONO WICHMAN
Associate

THERESA DEAN
Associate

R. STAN DUNCAN, PLA, ASLA
Chairman Emeritus

RUSSELL Y. J. CHUNG, PLA, FASLA
Principal Emeritus

THOMAS S. WITTEN, FASLA
Principal Emeritus

W. FRANK BRANDT, FASLA
Founding Partner

May 18, 2026

Ms. Dawn Takeuchi Apuna
Director
City and County of Honolulu
Department of Planning and Permitting
650 South King Street, 7th Floor
Honolulu, Hawai‘i 96813

Attn: David Cholak, Zoning Regulations and Permits Branch

SUBJECT: GEN-2026-40 (DC)
HRS CHAPTER 343 DRAFT ENVIRONMENTAL ASSESSMENT (EA) – MILILANI HIGH SCHOOL TEACHER WORKFORCE HOUSING PROJECT, MILILANI, O‘AHU, PORTIONS OF TAX MAP KEYS (TMKs) 9-5-001: 017 AND 054

Dear Ms. Apuna:

Thank you for your letter (GEN-2026-40 DC) dated February 23, 2026, regarding the subject Project. As the planning consultant to Pacific Housing Assistance Corporation (PHAC), which is the developer working with the School Facilities Authority (SFA) on the Mililani High School Teacher Workforce Housing Project, we appreciate your comments. We offer the following responses:

1. **Parking Demand Study:** A parking demand study will be conducted and included as an appendix to and discussed in Section 4.2.4 of the Final EA. Section 4.2.4 of the Final EA will also include the number of bicycle parking (short-term and long-term) that would be provided as part of the proposed Project.
2. **Surrounding Area Information:** Section 1.3 (Surrounding Land Uses) of the Final EA will be updated to include recent or planned projects in the surrounding area such as the future tennis court enclosure (covered play court, which was mentioned in Section 4.7.5, page 57 and also in Section 7.1, page 137 of the Draft EA).
3. **Traffic Impact Analysis Report (TIAR):**
   a. As recommended, a timeline/phasing plan with dates to obtain building permits (BPs) for construction work will be submitted before BPs are submitted. The timeline will identify when the construction management plan (CMP), traffic management plan (TMP), and updates and/or validation to the findings of the initial TIAR will be submitted for review and approval.
   b. The CMP will identify the type, frequency, and routing of heavy trucks and construction-related vehicles.
   c. The TMP will be prepared in an effort to minimize the number of vehicle trips for daily activities by residents and will propose traffic demand management (TDM) strategies, such as carpooling, ride sharing, public transit, and bicycle incentives.

1001 Bishop Street, Suite 650
Honolulu, Hawai‘i 96813-3484
Tel: (808) 521-5631
Fax: (808) 523-1402
E-mail: sysadmin@pbrhawaii.com

printed on recycled paper

d. The TIAR will be updated one year after the issuance of the certificate of occupancy, to validate the traffic projections, trip reduction rates, distribution, and assignment contained in the initial TIAR.
e. Construction plans for all work within or affecting the public streets will be submitted for review and approval at the appropriate times; and traffic control plans during construction will be submitted for review and approval at the appropriate times.
f. The driveway will be designed to meet minimum width standards, will provide adequate vehicular sight distance, and will meet driveway grade requirements.
g. As recommended, all loading and trash pick-up areas will be designed such that vehicles enter and exit front first; all trash pick-up activities will be done on-site; adequate on-site turn-around areas will be provided; and the layout of parking spaces in the loading/delivery area will be designed not to interfere with turning maneuvers for large vehicles.
h. Pedestrian walkways will be designed to lead to pedestrian crossings.
i. Bicycle parking will be provided in a safe and convenient location.
j. The left turn lane from Meheula Parkway to the Project site will meet all applicable standards. All turning movements have been analyzed in the TIAR, and any modifications to the existing median will be done to provide for all movements as needed.

We value your participation in the environmental review process. Your email and our response will be reproduced in the forthcoming Final EA.

Sincerely,

PBR HAWAII

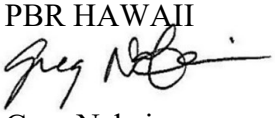

Greg Nakai
Senior Associate

cc: Lacey Shimabukuro, PHAC
Karen Arakawa, PHAC

HONOLULU FIRE DEPARTMENT
KA 'OIHANA KINAI AHI O HONOLULU
CITY AND COUNTY OF HONOLULU

636 SOUTH STREET • HONOLULU, HAWAI'I 96813
PHONE: (808) 723-7139 • FAX: (808) 723-7111 • WEBSITE: honolulu.gov

RICK BLANGIARDI
MAYOR
MEIA

SHELDON K. HAO
FIRE CHIEF
LUNA NUI KINAI AHI

JASON SAMALA
DEPUTY FIRE CHIEF
HOPE LUNA NUI KINAI AHI

January 27, 2026

Mr. Greg Nakai, Senior Associate
PBR Hawaii & Associates, Inc.
1001 Bishop Street, Suite 650
Honolulu, Hawai'i 96813-3484

Dear Mr. Nakai:

Subject: Pre-Assessment Consultation for a HRS Chapter 343
Environmental Assessment
Mililani High School Teacher Workforce Housing Project
Mililani, O'ahu
Tax Map Key: 9-5-001: 017 and :054

In response to your letter dated January 15, 2026, regarding the abovementioned subject, the Honolulu Fire Department reviewed the submitted information and has no comment at this time.

Should you have questions, please contact Battalion Chief Pao-Chi Hwang of our Fire Prevention Bureau at 808-723-7151 or hfdfpb1@honolulu.gov.

Sincerely,

REID YOSHIDA
Assistant Chief

RY/MN:sk

PBR HAWAII
& ASSOCIATES, INC.

KIMI MIKAMI YUEN, LEED® AP BD+C
President / Chairperson

VINCENT SHIGEKUNI
Executive Vice-President / Principal

GRANT T. MURAKAMI, AICP, LEED® AP BD+C
Executive Vice-President / Principal

CATIE CULLISON, AICP
Senior Vice-President / Principal

TOM SCHNELL, AICP
Vice-President / Principal

MARC SHIMATSU, PLA, ASLA
Vice-President / Principal

RAYMOND T. HIGA, PLA, ASLA
Associate Principal

DACHENG DONG, LEED® AP
Associate Principal

NATHALIE RAZO
Associate Principal

ANN MIKIKO BOUSLOG, PhD
Director of Land Economics & Real Estate

RAMSAY R. M. TAUM
Cultural Sustainability Planner

ETSUYO KILA
Senior Associate

GREG NAKAI
Senior Associate

BRADLEY FURUYA, AICP
Associate

C.R. 'IMIPONO WICHMAN
Associate

THERESA DEAN
Associate

R. STAN DUNCAN, PLA, ASLA
Chairman Emeritus

RUSSELL Y. J. CHUNG, PLA, FASLA
Principal Emeritus

THOMAS S. WITTEN, FASLA
Principal Emeritus

W. FRANK BRANDT, FASLA
Founding Partner

May 18, 2026

Mr. Reid Yoshida
Assistant Fire Chief
City and County of Honolulu
Honolulu Fire Department
636 South Street
Honolulu, Hawai'i 96813

Attn: Battalion Chief Pao-Chi Hwang

SUBJECT: HRS CHAPTER 343 DRAFT ENVIRONMENTAL ASSESSMENT (EA) – MILILANI HIGH SCHOOL TEACHER WORKFORCE HOUSING PROJECT, MILILANI, O'AHU, PORTIONS OF TAX MAP KEYS (TMKs) 9-5-001: 017 AND 054

Dear Assistant Fire Chief Yoshida:

Thank you for your letter dated January 27, 2026, regarding the subject Project. As the planning consultant to Pacific Housing Assistance Corporation (PHAC), which is the developer working with the School Facilities Authority on the Mililani High School Teacher Workforce Housing Project, we acknowledge that the Honolulu Fire Department has no comment at this time.

We value your participation in the environmental review process. Your email and our response will be reproduced in the forthcoming Final EA.

Sincerely,

PBR HAWAII

Greg Nakai
Senior Associate

cc: Lacey Shimabukuro, PHAC
Karen Arakawa, PHAC

1001 Bishop Street, Suite 650
Honolulu, Hawai'i 96813-3484
Tel: (808) 521-5631
Fax: (808) 523-1402
E-mail: sysadmin@pbrhawaii.com

printed on recycled paper

MILILANI/ WAIPIʻO/ MELEMANU NEIGHBORHOOD BOARD NO. 25

NEIGHBORHOOD COMMISSION • 925 DILLINGHAM BOULEVARD, SUITE 160 • HONOLULU, HAWAIʻI 96817
PHONE (808) 768-3710 • FAX (808) 768-3711 • WEBSITE: honolulu.gov

February 23, 2026

PBR Hawaiʻi & Associates, Inc.
Attn: Greg Nakai
1001 Bishop Street, Suite 650
Honolulu, HI 96813-3484
Via email: sysadmin@pbrhawaii.com

Subject: Community & Mililani Neighborhood Board Comments on
Mililani High School Teacher Workforce Housing Project, Mililani Oʻahu
Draft environmental assessment and anticipated finding of no significant impact (DEA-AFNSI)
Tax Map Key (TMK) 9-5-001:054 Portion of

Aloha Mr. Nakai,

Mahalo for the opportunity to provide comments on the Draft Environmental Assessment (Draft EA) for the proposed Mililani High School (MHS) Teacher Workforce Housing project.

As Chair of the Mililani-Waipiʻo-Melemanu Neighborhood Board No. 25, I write to share community priorities and feedback to help guide the refinement of the Draft EA. Our goal is to support quality and affordable teacher housing that is compatible with school operations, neighborhood and community safety, and Mililani's character and quality of life.

At the January 28, 2026 meeting of the Mililani-Waipiʻo-Melemanu Neighborhood Board No. 25, the State of Hawaiʻi's School Facilities Authority (SFA), their contractor the Pacific Housing Assistance Corporation (PHAC), and PHAC's planning firm, PBR Hawaiʻi & Associates (PBR) attended the hybrid meeting online, with SFA staff attending in person to announce the public availability of the Draft EA for review. Mahalo for attending this meeting and being available to our community members' questions and comments.

Below is a summary of community feedback and priorities:

1) Traffic Impact Analysis (TIA):

The preliminary traffic plan indicates that future residents would utilize the currently uncontrolled intersection on Meheula Parkway located between:

- Anania Drive / Meheula Parkway
- Meheula Parkway / Kamehameha Highway

Existing Conditions:
This uncontrolled intersection currently allows drivers to:

- Travel westbound on Meheula Parkway and turn left across two eastbound lanes into The Church of Jesus Christ of Latter-day Saints.
- Exit the church and turn either right or left onto Meheula Parkway (left turns require crossing two eastbound lanes).
- Travel eastbound on Meheula Parkway (except large trucks), make a U-turn, and merge into the rightmost westbound lane to access the Mililani USPS Post Office.

Community Concerns:
Board members and community members expressed significant concerns that adding left turns from the Project's driveway apron onto eastbound Meheula Parkway—may increase congestion and collision risk at this already uncontrolled intersection.

Requested Clarifications and Analysis:

Board members requested:

1. Clarification, revision, and expanded traffic impact analysis for the following intersections, including, but not limited do:
    - The uncontrolled Meheula Parkway intersection (between Anania and Kamehameha Highway)
    - Meheula Parkway / Kamehameha Highway
    - Anania Drive / Meheula Parkway
    - Makaimoimo Street / Meheula Parkway
2. Updated traffic counts and incorporation of more recent and robust data into the traffic impact analysis.
3. Review of U-turn volumes at the uncontrolled Meheula Parkway intersection near the proposed Project driveway location.
4. Confirming with the project's traffic engineering consultant, AECOM, if the projected volume of traffic from the proposed Project warrants installation of traffic signals (the draft traffic impact analysis report noted that it did not).
5. Request formal review from:
    - The City Department of Transportation Services, as the uncontrolled intersection is approximately 420 feet from the Anania Drive/Meheula Parkway intersection; and
    - The State Department of Transportation, as the uncontrolled intersection is approximately 770 feet from the Meheula Parkway/Kamehameha Highway intersection.

    If signalization is not recommended by the State & County transportation agencies, provide written mitigation recommendations and plan for alternative traffic control measures.
6. Clarification, maps, and proposed locations of the 149 displaced, proposed off-street parking stalls for MHS students and teachers in the traffic impact analysis.
7. Expanded analysis of AM/PM peak conditions, athletic events, stadium/gym events, community events, weekends, and on-campus queueing.
8. Inclusion of multimodal strategies (transit incentives, bus connectivity, secure bike storage, car-share stalls, etc.).

2) Project Costs & Infrastructure

Board members requested clarification regarding:

- Apparent inconsistencies between previously presented infrastructure cost estimates and those in the Draft EA.
- Sewer/plumbing infrastructure capacity and associated costs.
- Utility capacities (water, sewer, power) and resilience measures.

We encourage inclusion of high-efficiency, preferably all-electric design elements including PV, solar hot water, high-efficiency HVAC, EV charging, ENERGY STAR / WaterSense fixtures, leak detection, and drought-tolerant landscaping, consistent with:

- HRS §302A-1510 (Net-Zero Public Schools by 2035)
- HRS §269-92 (100% Renewable Energy by 2045)
- HRS §174C-31(g)(6) (100% reclaimed water use in public facilities by 2045)

3) Residential Workforce Need, Equity, and Accessibility

- Quantify housing demand among teachers and education staff of their preference to live in the Mililani area, and demonstrate that the proposed unit mix (studios, 1-BR, 2-BR) matches local household sizes.
- Define rent bands (e.g., ≤60% / 80% / 100% AMI) with monthly rent assumptions compared to typical DOE salaries and take-home pay.
- Clarify eligibility, prioritization, and limits (e.g., teachers, probationary teachers, aides, HIDOE staff, others).
- Identify the number and location of ADA-compliant units, and ensure full ADA accessibility throughout the multi-story building, including increased elevator access and accessible routes for residents and visitors.
- Explain how house rules addressing weapons/firearm ownership, alcohol, tobacco, medicinal cannabis, and prohibitions on illegal drug activity will be enforced consistent with fair-housing laws and all applicable public school and State property policies, prohibitions, and statutes.
- Specify how the project will ensure teachers receive first priority for units—consistent with the project's purpose—before extending eligibility in a defined "waterfall" order (e.g., teachers, aides, other HIDOE staff). Describe the tenant-priority waterfall, eligibility verification, fair-housing compliance, and an appeals process to maintain this prioritization over time.

4) Site Planning, Safety, and School Operations

- Provide a school-day/after-hours circulation plan for events (athletic games, concerts/band, community fairs and parades) do not conflict with resident/visitor traffic and parking.
- One board member asked, will this affect the weekly Farmers Market at Mililani High School?
- Identify safe walking routes and enhanced crossings to campus, bus stops, the Mililani Town Center, the Mililani Transit Center, and the Mililani Shopping Center; include ADA-compliant paths, curb ramps, and lighting.
- Demonstrate that the project's architecture, site plan, materials, colors, massing, and landscaping are compatible with Mililani Town's design standards, aesthetics, and neighborhood character, honoring its status as Hawaiʻi's first master-planned community and the state's only All-America City.

5) Property Management, Security, and Community Interface

- Identify the property manager, staffing model, after-hours security, and house rules (parking, trash, noise, pets).
- Provide mail/package management and right-sized waste, recycling, and green-waste enclosures.
- One board member asked, will there be on-site laundry facilities for the project's residents?

6) Alternatives & Cumulative Effects

- Address cumulative effects with other foreseeable Central Oʻahu projects (traffic, infrastructure, and MHS campus projects).

7) Community Benefits & Mitigation Commitments

- Consider funding or in-kind support for Safe Routes to School, crosswalk upgrades, traffic calming, shade trees/canopy, and shielded campus security lighting.
- Describe ongoing good-neighbor practices for operations, repair/maintenance, and community collaboration by the property management.

The Mililani-Waipiʻo-Melemanu Neighborhood Board No. 25 supports well-planned teacher housing that strengthens affordability for our teachers and supports our schools and community. We recognize this is the State's pilot workforce housing project and appreciate that educators aspire to live in Mililani.

These traffic impact analysis concerns are significant and central to the project's long-term success with the Mililani community. Thoughtful, comprehensive traffic planning is essential to ensure safety for teachers, staff, students, residents, pedestrians, and drivers. I also recommend that the Final EA address the additional feedback outlined in this letter to help ensure the project is successful for both the State and the Mililani community.

I have received feedback from several Board members who have expressed concerns regarding project costs, traffic impacts, and building massing, and some are currently reevaluating their individual positions. However, at this time, **the Board's official position remains in support of the project**. Any Board members who submit separate comments or opposition are doing so in their personal capacity as residents and not on behalf of the Mililani-Waipiʻo-Melemanu Neighborhood Board No. 25.

We respectfully request that the Final EA and Traffic Impact Analysis Report thoroughly address the items above and that SFA and Pacific Housing return to a future Neighborhood Board meeting to continue public dialogue.

Mahalo for your consideration.

Respectfully,

Danielle M. M. Bass
Chair, Mililani-Waipiʻo-Melemanu Neighborhood Board No. 25

PBR HAWAII
& ASSOCIATES, INC.

KIMI MIKAMI YUEN, LEED® AP BD+C
President / Chairperson

VINCENT SHIGEKUNI
Executive Vice-President / Principal

GRANT T. MURAKAMI, AICP, LEED® AP BD+C
Executive Vice-President / Principal

CATIE CULLISON, AICP
Senior Vice-President / Principal

TOM SCHNELL, AICP
Vice-President / Principal

MARC SHIMATSU, PLA, ASLA
Vice-President / Principal

RAYMOND T. HIGA, PLA, ASLA
Associate Principal

DACHENG DONG, LEED® AP
Associate Principal

NATHALIE RAZO
Associate Principal

ANN MIKIKO BOUSLOG, PhD
Director of Land Economics & Real Estate

RAMSAY R. M. TAUM
Cultural Sustainability Planner

ETSUYO KILA
Senior Associate

GREG NAKAI
Senior Associate

BRADLEY FURUYA, AICP
Associate

C.R. ʻIMIPONO WICHMAN
Associate

THERESA DEAN
Associate

R. STAN DUNCAN, PLA, ASLA
Chairman Emeritus

RUSSELL Y. J. CHUNG, PLA, FASLA
Principal Emeritus

THOMAS S. WITTEN, FASLA
Principal Emeritus

W. FRANK BRANDT, FASLA
Founding Partner

1001 Bishop Street, Suite 650
Honolulu, Hawaiʻi 96813-3484
Tel: (808) 521-5631
Fax: (808) 523-1402
E-mail: sysadmin@pbrhawaii.com

printed on recycled paper

May 18, 2026

Ms. Danielle M. M. Bass, Chair
City and County of Honolulu
Mililani-Waipiʻo-Melemanu Neighborhood Board No. 25
925 Dillingham Boulevard, Suite 160
Honolulu, Hawaiʻi 96817

SUBJECT: HRS CHAPTER 343 DRAFT ENVIRONMENTAL ASSESSMENT (EA) – MILILANI HIGH SCHOOL TEACHER WORKFORCE HOUSING PROJECT, MILILANI, OʻAHU, PORTIONS OF TAX MAP KEYS (TMKs) 9-5-001: 017 AND 054

Dear Ms. Bass:

Thank you for your letter dated February 23, 2026, regarding the subject Project. As the planning consultant to Pacific Housing Assistance Corporation (PHAC), which is the developer working with the School Facilities Authority (SFA) on the Mililani High School Teacher Workforce Housing Project, we appreciate your continued support for the project. Thank you for your thoughtful comments. We offer the following responses:

1. **Transportation Impact Assessment Report (TIAR)**:
   - Community Concerns regarding Uncontrolled Intersection: According to the traffic engineer, AECOM, projected traffic volumes at the proposed driveway will operate with an acceptable level of service. The community concerns for the left turns are noted.

   (1) Four Study Intersections: The four intersections mentioned in your letter are included in the TIAR. The study intersections were previously screened with the State Department of Transportation (HDOT) and the City Department of Planning and Permitting - Traffic Review Branch (DPP-TRB) prior to the start of the traffic study. The TIAR has been updated to include the U-turn volumes at the uncontrolled Meheula Parkway intersection between Anania Drive and Kamehameha Highway, and to include further discussion on the intersection improvements at the project driveway.

   (2) Traffic Counts: Traffic counts were taken during the AM/PM peak periods and peak student arrival/departure periods during September 2025 under typical conditions.

   (3) U-Turn Volumes: As mentioned above, the TIAR has been updated to include the U-turn volumes at the uncontrolled Meheula Parkway intersection between Anania Drive and Kamehameha Highway. The updated TIAR will be included in the Final EA. According to the updated TIAR, during the second highest peak hour, there were 4 U-turns during the AM peak hour period and 17 U-turns during the PM peak hour period. It should be noted that the Post Office does not open to the public until 9:00 AM and closes at 5:00 PM. The project residents' assumed departure and arrivals to/from the site should be minimally conflicting with traffic going to the Post Office during the weekdays.

(4) Traffic Signal: According to the TIAR: *"It is recommended that STOP-sign-controlled access be installed at the project driveway. The intersection operates at an acceptable level for the peak hour period with just STOP-sign control at the driveway."* The project's traffic engineering consultant, AECOM, has confirmed that the projected volume of traffic generated by the proposed Project would not warrant the installation of a traffic signal at the proposed Project driveway intersection. Further discussion is provided in the updated TIAR, which will be included in the Final EA.

(5) Review by City and State Transportation Agencies: The City Department of Transportation Services (DTS) and HDOT, as well as DPP-TRB, were included in the distribution of the Draft EA and invited to review and provide comments. DTS did not provide comments within the public review period; HDOT replied that "HDOT Highways has no comments on the DEA"; and DPP-TRB provided comments that will be included in Appendix L of the Final EA. None of these agencies commented on whether signalization is warranted. According to AECOM, the TIAR was submitted to both DPP-TRB and HDOT. DPP-TRB can distribute the TIAR to the other agencies such as DTS for review. The TIAR was written such that it complies with DTS's TIA Guide. In response to a request from DPP-TRB, an update to the TIAR will be conducted one year after the project is in operation, in order to validate the traffic projections, trip reduction rates, distribution, and assignment contained in the initial TIAR.

(6) Replacement of Existing Parking: SFA is currently working with DOE to identify a nearby site on campus to replace/relocate the existing 48-stall overflow parking lot that will be displaced in order to implement the proposed Project. This will be acknowledged in the Final EA. Figure 5b of the Final EA shows the proposed location of the replacement parking within the campus. The proposed replacement parking lot will be paved and have access from a campus driveway. It should be noted that this proposed replacement parking lot will provide access to athletic fields and events.

(7) Expanded Analysis: According to AECOM, current analysis was based on the conditions set forth in the DTS TIA Guide. The TIAR documents the impact of the project under the typical conditions, which is the AM/PM commuter peak hour. During one day of the data collection, a College and Career Fair was held at the school that evening, which was partially collected. Further analysis for school events (athletic events, stadium events, etc.) seem to push for a traffic study for the school rather than for the development.

(8) Multimodal Strategies: Section 4.2.2 of the TIAR contains recommended Travel Demand Management (TDM) strategies, including multimodal strategies.

2. **Project Costs & Infrastructure:** Infrastructure and utility cost estimates continue to fluctuate, as plans change and new considerations emerge. High-efficiency design elements will be included in the final design as feasible.

   Regarding the *"[a]pparent inconsistencies between previously presented infrastructure cost estimates and those in the Draft EA":* In response to the SFA's RFP, in May 2024, PHAC proposed 109 affordable rental housing units at the corner of Meheula Parkway and

Ho‘okelewa‘a Street. The estimated project cost was $83.5 million, including a request for the state to contribute $5 million for the demolition and relocation of existing agricultural program facilities. The proposed site was relatively flat and could connect to an existing sewer stubout in Ho‘okelewa‘a Street.

In December 2024, the SFA directed PHAC to relocate the project to an area near athletic fields. PHAC noted that Site B was significantly larger with substantial grade changes that would require more site and civil work to make it developable. Since there is no existing sewer line in Meheula Parkway, a new off-site sewer line of approximately 1,300 linear feet would be required to connect the site with an existing sewer stubout in Kamehameha Highway. Due to site constraints, the building footprint would be shrunk, and the number of housing units would be reduced. The proposed $5 million State contribution to relocate agricultural facilities was no longer needed and was not requested for the new sewer line.

Through discussions with the DOE and the school principal in 2025, the project site and building size were further reduced in anticipation of a roof structure to be installed over existing tennis courts. The current site plan and building will provide 95 housing units and about 150 on-site parking stalls. The project cost is approximately $80 million.

3. **Residential Workforce Need, Equity, & Accessibility:**
   a) Housing demand was discussed in Section 2.1 of the Draft EA, while the preference to live in the Mililani area and rental unit preferences were shown in the Employee Housing Survey included as Appendix D.
   b) Information on estimated rents, tenant eligibility and prioritization will be shared separately from the EA when project financing is determined. Income limits by family size and affordable rents by percentage of area median income are established by the U.S. Department of Housing and Urban Development and updated each year. PHAC and SFA will develop a fair and equitable process to accommodate as many teachers as possible. The property manager hired by PHAC will manage the applicant pool based on an agreed upon criterion. If there are more applicants than units available, a lottery will be conducted to place eligible applicants. The property manager will maintain a wait list as well as develop house rules for the project.
   c) The number and location of Americans with Disabilities Act (ADA)-compliant units will be determined in the design phase of development. The Project will follow all ADA requirements, and plans will be reviewed and approved by the Disability and Communication Access Board (DCAB) to confirm compliance.

4. **Site Planning, Safety, and School Operations:** Separation between Mililani High School and the Project will be established by a perimeter fence and secured entries, to avoid conflicts with school operations and events. The Project’s property manager will coordinate with the school for events (such as the weekly farmers market) that may have an impact on the housing and its residents. ADA-compliant paths will provide internal circulation for pedestrians and bicyclists and will connect to external networks. The TIAR discusses pedestrian, bicycle, and public transit facilities in the vicinity (see Section 4.2 of the Draft EA). The Mililani Town

Association (MTA) has confirmed with the SFA that State land is beyond the purview of the MTA; however, the developer will consider MTA design rules.

5. **Property Management, Security, and Community Interface:** As discussed in Section 2.3 of the Draft EA, a property management firm has been identified. The preliminary on-site staffing plan includes a live-in manager, compliance/administration, and maintenance staff. After-hours security staff is not planned at this time; however, a perimeter fence, secured parking and building entry, and on-site resident management will be provided. Additional security measures will be considered during operation. The property manager will develop house rules for the project. As mentioned in Section 4.6.6 of the Draft EA, design elements may be considered to facilitate the separation and collection of materials for recycling. Current plans also have laundry facilities on site.

6. **Alternatives & Cumulative Effects:** Cumulative impacts are discussed in Section 7.1 of the Draft EA.

7. **Community Benefits & Mitigation Commitments:** We acknowledge your suggestion to consider funding or in-kind support for Safe Routes to School, crosswalk upgrades, traffic calming, shade trees/canopy, and shielded campus security lighting. As mentioned in Section 2.3 of the Draft EA, PHAC will coordinate with property management to develop ongoing good-neighbor practices for operations, repair/maintenance, and community collaboration. The proposed Project will provide a significant community benefit by supplying urgently needed teacher workforce housing to support teacher retention and recruitment efforts.

We appreciate your comments and recommendations. Your continued support and input are pivotal to the Project. Your email and our response will be reproduced in the forthcoming Final EA.

Sincerely,

PBR HAWAII

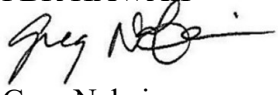

Greg Nakai
Senior Associate

cc: Lacey Shimabukuro, PHAC
Karen Arakawa, PHAC

From:	sysadmin
To:	Greg Nakai
Subject:	Fw: Request for Comments on Draft Environmental Assessment for Mililani High School Teacher Workforce Housing Project
Date:	Monday, February 23, 2026 10:57:54 AM
Attachments:	image001.jpg

From: Uehira, Erin <Erin.Uehira@hawaiianelectric.com>
Sent: Friday, February 20, 2026 4:45 PM
To: sysadmin <sysadmin@pbrhawaii.com>
Cc: Liu, Rouen <rouen.liu@hawaiianelectric.com>; Bungcayao, Michael <michael.bungcayao@hawaiianelectric.com>
Subject: Request for Comments on Draft Environmental Assessment for Mililani High School Teacher Workforce Housing Project

Warning: Unusual sender <erin.uehira@hawaiianelectric.com>
You don't usually receive emails from this address. Make sure you trust this sender before taking any actions.

Dear Mr. Nakai,

Thank you for the opportunity to review and comment on the subject project. Hawaiian Electric Company has no objections to the proposed project. Please note that if Hawaiian Electric has existing infrastructure on the subject property, continued access will be necessary for the maintenance of our infrastructure. Also, should the project impact existing Hawaiian Electric facilities, please contact us.

We greatly appreciate your efforts to keep us informed throughout the planning process. As the proposed Mililani High School Teacher Workforce Housing Project comes to fruition, please continue to keep us informed.

Should you have any questions or require further clarification, please contact me.

Thank you,
Erin

ERIN UEHIRA
Permits Planner, Transmission & Distribution Engineering

O: 808.543.7889 | **M:** 808.970.3114
erin.uehira@hawaiianelectric.com

Hawaiian Electric
PO Box 2750, Honolulu, HI 96840

Follow us: Facebook | X (Twitter) | Instagram | YouTube | Flickr | Pinterest | Medium | LinkedIn

---

CONFIDENTIALITY NOTICE: This e-mail message, including any attachments, is for the sole use of the intended recipient(s) and may contain confidential and/or privileged information. Any unauthorized review, use, copying, disclosure or distribution is prohibited. If you are not the intended recipient, please contact the sender immediately by reply e-mail and destroy the original message and all copies.

PBR HAWAII
& ASSOCIATES, INC.

KIMI MIKAMI YUEN, LEED® AP BD+C
President / Chairperson

VINCENT SHIGEKUNI
Executive Vice-President / Principal

GRANT T. MURAKAMI, AICP, LEED® AP BD+C
Executive Vice-President / Principal

CATIE CULLISON, AICP
Senior Vice-President / Principal

TOM SCHNELL, AICP
Vice-President / Principal

MARC SHIMATSU, PLA, ASLA
Vice-President / Principal

RAYMOND T. HIGA, PLA, ASLA
Associate Principal

DACHENG DONG, LEED® AP
Associate Principal

NATHALIE RAZO
Associate Principal

ANN MIKIKO BOUSLOG, PhD
Director of Land Economics & Real Estate

RAMSAY R. M. TAUM
Cultural Sustainability Planner

ETSUYO KILA
Senior Associate

GREG NAKAI
Senior Associate

BRADLEY FURUYA, AICP
Associate

C.R. 'IMIPONO WICHMAN
Associate

THERESA DEAN
Associate

R. STAN DUNCAN, PLA, ASLA
Chairman Emeritus

RUSSELL Y. J. CHUNG, PLA, FASLA
Principal Emeritus

THOMAS S. WITTEN, FASLA
Principal Emeritus

W. FRANK BRANDT, FASLA
Founding Partner

May 18, 2026

Ms. Erin Uehira
Permits Planner
Hawaiian Electric Company
Transmission and Distribution Engineering
PO Box 2750
Honolulu, HI 96840

Attn: Rouen Liu, Michael Bungcayao

SUBJECT: HRS CHAPTER 343 DRAFT ENVIRONMENTAL ASSESSMENT (EA) – MILILANI HIGH SCHOOL TEACHER WORKFORCE HOUSING PROJECT, MILILANI, O'AHU, PORTIONS OF TAX MAP KEYS (TMKs) 9-5-001: 017 AND 054

Dear Ms. Uehira:

Thank you for your email dated February 20, 2026, regarding the subject Project. As the planning consultant to Pacific Housing Assistance Corporation (PHAC), which is the developer working with the School Facilities Authority on the Mililani High School Teacher Workforce Housing Project, we acknowledge that Hawaiian Electric Company (HECO) has no objections. If HECO infrastructure is on the project site, it is acknowledged that continued access will be necessary for maintenance. It is also acknowledged that if any impacts are expected to existing facilities, HECO will be contacted. The Project team will continue to keep HECO informed throughout the Project.

We value your participation in the environmental review process. Your email and our response will be reproduced in the forthcoming Final EA.

Sincerely,

PBR HAWAII

Greg Nakai
Senior Associate

cc: Lacey Shimabukuro, PHAC
Karen Arakawa, PHAC

1001 Bishop Street, Suite 650
Honolulu, Hawai'i 96813-3484
Tel: (808) 521-5631
Fax: (808) 523-1402
E-mail: sysadmin@pbrhawaii.com

printed on recycled paper

From:	sysadmin
To:	Greg Nakai
Subject:	Fw: FEEDBACK AND CONCERNS REGARDING THE DRAFT ENVIRONMENTAL ASSESSMENT AND ANTICIPATED FINDING OF NO SIGNIFICANT IMPACT FOR THE PROPOSED MILILANI HIGH SCHOOL TEACHER WORKFORCE HOUSING PROJECT, MILILANI, OʻAHU, HAWAIʻI, PORTIONS OF TMKs (1) 9-5-001: 017...
Date:	Monday, February 23, 2026 7:08:18 PM

From: Becky Gustafson <becky.gus@gmail.com>
Sent: Monday, February 23, 2026 3:31 PM
To: sysadmin <sysadmin@pbrhawaii.com>
Subject: RE: FEEDBACK AND CONCERNS REGARDING THE DRAFT ENVIRONMENTAL ASSESSMENT AND ANTICIPATED FINDING OF NO SIGNIFICANT IMPACT FOR THE PROPOSED MILILANI HIGH SCHOOL TEACHER WORKFORCE HOUSING PROJECT, MILILANI, O'AHU, HAWAI'I, PORTIONS OF TMKs (1) 9-5-001: 017...

Warning: Unusual sender <becky.gus@gmail.com>
You don't usually receive emails from this address. Make sure you trust this sender before taking any actions.

To Whom It May Concern,
I'm writing regarding the incomplete Draft Environmental Assessment and incorrect finding of "No Significant Impact" to the community. I find the conclusion flawed as the assessment doesn't adequately address parking concerns, ingress and egress to the property, impact on local traffic patterns, invasion of privacy of neighboring properties, sewer connection costs nor Mililani Town Association Master Plan community assessments and has a confusing project objective.
I request the Environmental Assessment be revised to address my concerns below:
Parking Concerns:

- Section 2.3 on page 14 states the project will have 95- one & two bedroom units and provide secured on-site parking. The number of parking stalls is not mentioned in this section. Pervious discussions have mentioned that there will NOT be at least one parking stall per unit which is a concern.
- At the January Neighborhood Board 25 meeting it was stated that sufficient parking would be present in the project and residents would not be parking on surrounding streets. Where is the evidence to justify this conclusion. How can you state residents won't be parking on the surrounding streets?
- A study on the parking availability of the surrounding streets needs to be done.

Ingress & Egress Access:

- Section 2.3 page 14 states "Access to the Project site will be via a proposed new entry drive at an existing curb-cut located on Meheula Parkway, directly

across from the driveway to the Church of Jesus Christ of Latter-day Saints (LDS Church). A stop sign is proposed as sufficient traffic control.

- However, a study regarding this intersection was not done during the Holidays or peak postal hours when the intersection is being used for "U-turns" by people accessing the Post Office. A study of the intersection during peak Holiday Mailing should be done.
- Without a traffic signal, this intersection will be dangerous for people trying to leave and enter the complex.

Local Traffic Patterns:

- I believe the traffic studies and patterns discussed in Section 4.2 are flawed. The studies seemed only concerned with the traffic of the High School and found increase traffic during school hours. However, residents will be living in the complex 24 hours a day seven days a week. The studies didn't discuss the traffic patterns of the members of the Church across the street on Saturday's and Sunday's nor did it discuss the business traffic to the post office in the afternoons between 4pm and 5pm.
- Traffic patterns of the area should be studied for longer periods of time over more days to get an accurate picture of the traffic patterns of the area especially at the proposed intersection.

Invasion of Privacy:

- The report seems to brush over the impact of the height of the project and the privacy of the homes around the area. As this complex is going to be the tallest building next to the homes all residents in the complex are going to be able to see into the private yards of the single family homes in the area. Residents should be informed what part of their homes will be viewable from the units of the complex.

Sewer Connection Costs:

- Section 6.2.3 page 136 states "The "Preferred Site" was originally rejected by the Applicant due the distance of the site from the municipal sewer collection system. It had been determined that the cost of connecting to the municipal sewer collection system would render the proposed teacher workforce housing project economically unfeasible.". We were previously told that the "Preferred Site" was "economically unfeasible" due to the cost of connecting the sewer infrastructure. How can this report now draw alternative conclusions as stated in Section 4.6.1 without discussing the initial conclusions in the Applicant's original report?

Mililani Town Association Master Plan:

- Section 1.3 on page 2 describes the Mililani Town Master Planned Community. However, the assessment incorrectly infers the Workforce housing project will be a part of the community. This is incorrect. As per the Mililani Town Association DCC&R's the property on which the workforce will sit will not

be a part of the Mililani Town Association Community. This means it's residents will not have access to the mentioned seven (7) recreation centers of Mililani Town Association nor to the classes and services offered to Mililani Town Association residents.

Project Objective

- Section 2.2 on page 12 states the projects objective is to "offer new multifamily rental unit options at affordable rents to Hawai'I's teachers and education personnel". However, this statement is misleading. The statement infers that the housing will be used for teachers and educators only. However, workforce housing means it will be available to all Department of Education Personal including janitors, security guards, cafeteria workers, teachers, administration ect. The assessment should reflect the objective of providing housing to all DOE employees not just teachers.

PBR HAWAII
& ASSOCIATES, INC.

KIMI MIKAMI YUEN, LEED® AP BD+C
President / Chairperson

VINCENT SHIGEKUNI
Executive Vice-President / Principal

GRANT T. MURAKAMI, AICP, LEED® AP BD+C
Executive Vice-President / Principal

CATIE CULLISON, AICP
Senior Vice-President / Principal

TOM SCHNELL, AICP
Vice-President / Principal

MARC SHIMATSU, PLA, ASLA
Vice-President / Principal

RAYMOND T. HIGA, PLA, ASLA
Associate Principal

DACHENG DONG, LEED® AP
Associate Principal

NATHALIE RAZO
Associate Principal

ANN MIKIKO BOUSLOG, PhD
Director of Land Economics & Real Estate

RAMSAY R. M. TAUM
Cultural Sustainability Planner

ETSUYO KILA
Senior Associate

GREG NAKAI
Senior Associate

BRADLEY FURUYA, AICP
Associate

C.R. 'IMIPONO WICHMAN
Associate

THERESA DEAN
Associate

R. STAN DUNCAN, PLA, ASLA
Chairman Emeritus

RUSSELL Y. J. CHUNG, PLA, FASLA
Principal Emeritus

THOMAS S. WITTEN, FASLA
Principal Emeritus

W. FRANK BRANDT, FASLA
Founding Partner

1001 Bishop Street, Suite 650
Honolulu, Hawai'i 96813-3484
Tel: (808) 521-5631
Fax: (808) 523-1402
E-mail: sysadmin@pbrhawaii.com

printed on recycled paper

May 18, 2026

Ms. Becky Gustafson
becky.gus@gmail.com

SUBJECT: HRS CHAPTER 343 DRAFT ENVIRONMENTAL ASSESSMENT (EA) – MILILANI HIGH SCHOOL TEACHER WORKFORCE HOUSING PROJECT, MILILANI, O'AHU, PORTIONS OF TAX MAP KEYS (TMKs) 9-5-001: 017 AND 054

Dear Ms. Gustafson:

Thank you for your email dated February 23, 2026, regarding the subject Project. As the planning consultant to Pacific Housing Assistance Corporation (PHAC), which is the developer working with the School Facilities Authority (SFA) on the Mililani High School Teacher Workforce Housing Project, we are thankful for your comments and offer the following responses:

1. **Parking Concerns:** Current plans include a total of 150 stalls, with enough for each unit. As such, a parking availability study of the surrounding streets is not warranted. The Final EA will include a new section (4.2.4) to address parking concerns.

2. **Ingress & Egress Access:** The Final EA will include an updated Transportation Impact Assessment Report (TIAR) prepared by AECOM, which states:

   "The proposed project intersection would not warrant the installation of a traffic signal based on Warrant 3, Peak Hour, the projected peak hour volumes on Meheula Parkway and the project driveway fall well below the threshold volumes required for Warrant 3. While a full traffic signal warrant analysis should be completed after the project is completed if a traffic signal is desired, the projected volumes likely would not meet Warrant 1, Eight-Hour Vehicular Volume, or Warrant 2, Four-Hour Vehicular Volume threshold volumes, as well. Other intersection improvements that could be implemented such as 4-way stop control and a roundabout, but would likely not be warranted (4-way stop control) or not be a feasible solution (roundabout) to address traffic safety concerns."

   Data for the TIAR was collected during the typical AM/PM peak periods and during the school arrival/departure periods. The higher volumes were shown to be from the typical peak hour periods from 7:00 – 9:00 AM and 4:00 – 6:00 PM. The City and County of Honolulu Department of Transportation Service's (DTS's) Transportation Impact Assessment (TIA) Guide requires the analysis to be done for the second highest peak hour period. The TIAR evaluates the development's impact under typical, average conditions rather than during special conditions.

   The U-turns at the current intersection with The Church of Jesus Christ of Latter-day Saints (LDS Church) driveway were also counted during the data collection period. The TIAR has been updated to include the U-turn volumes at the uncontrolled Meheula Parkway intersection between Anania Drive and Kamehameha Highway.

The Post Office is typically open at 9:00 AM and closes at 5:00 PM on weekdays. The relatively low number of U-turns during the morning peak reflects the fact that the post office is not open to the public during that time period. The majority of the residents of the proposed project are expected to leave in the morning prior to 8:30 AM, which is before the Post Office opens. During the afternoon, if residents return after 5:00 PM, there should be minimal conflicts with vehicles making U-turns. The U-turn volumes between 5:00 PM and 6:00 PM were observed to be seven U-turns. The assumed departure and arrival to/from the site by residents of the project is anticipated to be minimally conflicting with traffic going to the Post Office during the weekdays.

3. **Local Traffic Patterns:** As mentioned above, data for the TIAR was collected during the typical AM/PM peak periods and during school arrival/departure periods. Data was collected from several days and up to 6 hours on each of the study days. The higher volumes were shown to be from the typical peak hour periods from 7:00 – 9:00 AM and 4:00 – 6:00 PM. DTS’s TIA Guide requires the analysis to be done for the second highest peak hour period. The TIAR evaluates the development’s impact under typical, average conditions rather than during special conditions.

4. **Invasion of Privacy:** We appreciate your concerns regarding this topic, but we do want to point out that besides the high school, the closest development to the project site is the LDS Church. The nearest single-family home is located across Meheula Parkway (near its intersection with Anania Drive), over 270 feet from the nearest portion of the project site. The private yards of the single-family homes in the area are more visible from neighbors’ adjoining single-family homes, especially those that are two-story. The large trees along Meheula Parkway and Project landscaping will provide further privacy.

5. **Sewer Connection Costs:** In response to the SFA’s RFP, in May 2024, PHAC proposed 109 affordable rental housing units at the corner of Meheula Parkway and Ho‘okelewa‘a Street. The estimated project cost was $83.5 million, including a request for the state to contribute $5 million for the demolition and relocation of existing agricultural program facilities. The proposed site was relatively flat and could connect to an existing sewer stubout in Ho‘okelewa‘a Street.

   In December 2024, the SFA directed PHAC to relocate the project to an area near the athletic fields. PHAC noted that Site B was significantly larger with substantial grade changes that would require more site and civil work to make it developable. Since there is no existing sewer line in Meheula Parkway, a new off-site sewer line of approximately 1,300 linear feet would be required to connect the site with an existing sewer stubout in Kamehameha Highway. Due to site constraints, the building footprint would be shrunk and the number of housing units would be reduced. The proposed $5 million State contribution to relocate agricultural facilities was no longer needed and was not requested for the new sewer line.

   Through discussions with the State Department of Education and the school principal in 2025, the project site and building size were further reduced in anticipation of a roof structure to be installed over existing tennis courts. The current site plan and building will provide 95 housing units and about 150 on-site parking stalls. The project cost is approximately $80 million.

6. **Mililani Town Association Master Plan:** Section 1.3 of the Draft EA describes the surrounding land uses, most of which is made up of the Mililani Town Master Planned Community. Nowhere was it stated that the proposed project is part of the Mililani Town Association or that residents of the proposed project will have access to the recreation centers of the Mililani Town Association or classes and services offered to Mililani Town Association residents.
7. **Project Objective:** Section 2.2 of the Final EA will be revised to clarify: *"The objective of this project is to offer new multifamily rental unit options at affordable rents, prioritizing Hawai'i's teachers and DOE employees."*

We value your participation in the environmental review process. Your email and our response will be reproduced in the forthcoming Final EA.

Sincerely,

PBR HAWAII

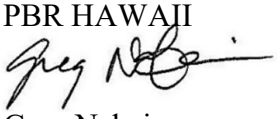

Greg Nakai
Senior Associate

cc: Lacey Shimabukuro, PHAC
Karen Arakawa, PHAC

From: sysadmin
To: Greg Nakai
Subject: Fw: DEA Mililani Teacher Housing
Date: Monday, February 2, 2026 9:09:35 AM

From: Carol Kwan <carol@carolkwanconsulting.com>
Sent: Friday, January 30, 2026 4:37 PM
To: sysadmin <sysadmin@pbrhawaii.com>
Subject: DEA Mililani Teacher Housing

Warning: Unusual sender <carol@carolkwanconsulting.com>
You don't usually receive emails from this address. Make sure you trust this sender before taking any actions.

Aloha,

I read/scanned your DEA. In general, I agree with your conclusions of "no impact". However, a question was raised by a Mililani Neighborhood Board member that I echo – what about the lost parking capacity from losing the parking lot that is currently located on the site? I did not find anything within the DEA addressing this issue. While the parking lot at the site is not the busiest on campus, it is highly used during events like sports matches, community craft fairs, carnivals, etc. When those occur, not only is that parking lot packed but cars are parked off of the pavement at the site. The parking lot being lost is also where Drivers Ed starts out new drivers in a relatively safe area along with parents teaching their children to drive.

I understand and agree that we need teachers' housing to help retain our teachers, particularly those starting out in their careers, but I think SFA also needs to take a look at what other projects it can/should do to mitigate the impacts from losing that parking lot. Perhaps it could build a parking structure elsewhere on campus? Perhaps DOE could work out an agreement with Town Center of Mililani, the Mililani Public Library, the YMCA, and/or the Church of Jesus Christ of Latter-Day Saints Mililani to utilize their parking lots during high demand events to help make up for the

lost parking capacity? These are just some ideas that should be considered.

Mahalo,

Carol Kwan
Carol Kwan Consulting LLC
PO Box 893953
Mililani, HI 96789-0953
Work (808) 381-1342
carol@carolkwanconsulting.com
www.carolkwanconsulting.com
ISA Certification WE-6803A

PBR HAWAII
& ASSOCIATES, INC.

KIMI MIKAMI YUEN, LEED® AP BD+C
President / Chairperson

VINCENT SHIGEKUNI
Executive Vice-President / Principal

GRANT T. MURAKAMI, AICP, LEED® AP BD+C
Executive Vice-President / Principal

CATIE CULLISON, AICP
Senior Vice-President / Principal

TOM SCHNELL, AICP
Vice-President / Principal

MARC SHIMATSU, PLA, ASLA
Vice-President / Principal

RAYMOND T. HIGA, PLA, ASLA
Associate Principal

DACHENG DONG, LEED® AP
Associate Principal

NATHALIE RAZO
Associate Principal

ANN MIKIKO BOUSLOG, PhD
Director of Land Economics & Real Estate

RAMSAY R. M. TAUM
Cultural Sustainability Planner

ETSUYO KILA
Senior Associate

GREG NAKAI
Senior Associate

BRADLEY FURUYA, AICP
Associate

C.R. 'IMIPONO WICHMAN
Associate

THERESA DEAN
Associate

R. STAN DUNCAN, PLA, ASLA
Chairman Emeritus

RUSSELL Y. J. CHUNG, PLA, FASLA
Principal Emeritus

THOMAS S. WITTEN, FASLA
Principal Emeritus

W. FRANK BRANDT, FASLA
Founding Partner

May 18, 2026

Ms. Carol Kwan
Carol Kwan Consulting LLC
PO Box 893953
Mililani, HI 96789-0953

SUBJECT: HRS CHAPTER 343 DRAFT ENVIRONMENTAL ASSESSMENT (EA) – MILILANI HIGH SCHOOL TEACHER WORKFORCE HOUSING PROJECT, MILILANI, O'AHU, PORTIONS OF TAX MAP KEYS (TMKs) 9-5-001: 017 AND 054

Dear Ms. Kwan:

Thank you for your email dated January 30, 2026, regarding the subject Project. As the planning consultant to Pacific Housing Assistance Corporation (PHAC), which is the developer working with the School Facilities Authority (SFA) on the Mililani High School Teacher Workforce Housing Project, we appreciate your comments. You may be pleased to hear that the SFA is currently working with the State of Hawai'i Department of Education to identify a nearby site on campus to replace/relocate the parking that will be displaced in order to implement the proposed project. This will be acknowledged in the Final EA. Figure 5b of the Final EA shows the proposed location of the replacement parking within the campus. The proposed replacement parking lot will be paved and have access from a campus driveway. It should be noted that this proposed replacement parking lot will provide access to athletic fields and events.

We value your participation in the environmental review process. Your email and our response will be reproduced in the forthcoming Final EA.

Sincerely,

PBR HAWAII

Greg Nakai
Senior Associate

cc: Lacey Shimabukuro, PHAC
Karen Arakawa, PHAC

1001 Bishop Street, Suite 650
Honolulu, Hawai'i 96813-3484
Tel: (808) 521-5631
Fax: (808) 523-1402
E-mail: sysadmin@pbrhawaii.com

printed on recycled paper

From: sysadmin
To: Greg Nakai
Subject: Fw: Objection to the Mililani High School Teacher Workforce Housing project
Date: Thursday, February 19, 2026 11:21:41 AM

From: mghsmart <mghsmart@yahoo.com>
Sent: Thursday, February 19, 2026 10:29 AM
To: sysadmin <sysadmin@pbrhawaii.com>
Subject: Objection to the Mililani High School Teacher Workforce Housing project

Warning: Unusual sender <mghsmart@yahoo.com>

You don't usually receive emails from this address.
Make sure you trust this sender before taking any actions.

Thank you for letting me comment on the Mililani High School Workforce Housing Project.

I originally supported the Mililani Teacher Workforce Housing Project. However, as new information became available, my support of this project in Mililani diminished until now, I am opposed to putting this residential complex on Mililani High School grounds. I and other residents originally thought the project would assist teachers working in Mililani. Subsequently, it was reported that the housing complex would not just serve Mililani teachers, it would be available to all teachers on Oahu who meet the income restrictions. Then, occupancy was extended to any Board of Education (BOE) employee who met income parameters, and finally we learned that when federal funds are solicited, HUD requires vacancies to be filled with anyone who meets income restrictions. This project has been "bait and switch" and a waste of taxpayer funds since the beginning. In a recent town hall hosted by Representative La Chica, it was stated that there would be more than 40 public school closings and in the future the teacher workforce housing would be on those grounds. I strongly recommend that the Mililani project be moved to West Oahu Community College area or one of the school closure locations. This will let Mililani keep their parking spaces and not endanger students with housing in close proximity to their classrooms.

Reasons I oppose this project as currently planned on Mililani High School Grounds:

1. The rationale for the housing keeps changing. Originally we thought it was for Mililani teachers. As stated above, the individuals who will occupy the units may not be teachers or even Board of Education (BOE) employees. After that we learned that because federal funds would be solicited and HUD would be involved, any vacant units would have to be made available to the community. We were sold a bill of goods that this was a project for our Mililani community. It is not.
2. First, the developers wasted funds by planning the project on land

that was not offered to them. This caused an uproar in the community and more funds were expended to plan for a housing complex on the land that was originally offered.

3. The expected monthly rental payment is unknown at this time. Since the developer will not have to pay for the land, there should be considerable savings when compared to a development where the land must be purchased.

4. The project will be elevated above the normal Mililani height restrictions to increase unit numbers and accommodate parking. This would be a major visual distraction from our planned community ambiance.

5. The project will have its entrance and exit on Meheula Parkway, adding considerable traffic to an already busy road.

6. The project takes parking spaces away from those participating in and attending sports events. Mililani High School has the third larges stadium in the state and often hosts island-wide events.

7. Having residential housing so close to schools is a student safety risk. Although it has been stated that there will be fencing to separate the residential units from school, there is no specification to determine whether it will be adequate to protect students. Sadly, there have been teachers who have sexually abused students.

8. During a recent town hall it was stated that future "teacher workforce housing" projects will be placed on land made available when 40+ public schools are scheduled to close. This is a good plan, however, this Mililani project should also be placed on land where the school is no longer in operation, not on Mililani High School land.

9. Was mentioned in a Neighborhood Board meeting that Land on the West Oahu Community College campus was offered as a site to build teacher workforce housing at one time. That location would be ideal since it is near the Skyline rail system which could increase its ridership. Transportation in and out of Mililani is mostly done using private vehicles.

10. No projects managed in our State are ever done within budget or on time. I noted in the document that this is scheduled for 3 years at $80 million. I don't have confidence that this won't be another wasteful, out of control, boondoggle project like the rail project.

For the reasons above, do not proceed with this project on Mililani High School property. Move the project to West Oahu Community College or one of the closed public school campuses.

Mary Smart
Mililani Town resident

PBR HAWAII
& ASSOCIATES, INC.

KIMI MIKAMI YUEN, LEED® AP BD+C
President / Chairperson

VINCENT SHIGEKUNI
Executive Vice-President / Principal

GRANT T. MURAKAMI, AICP, LEED® AP BD+C
Executive Vice-President / Principal

CATIE CULLISON, AICP
Senior Vice-President / Principal

TOM SCHNELL, AICP
Vice-President / Principal

MARC SHIMATSU, PLA, ASLA
Vice-President / Principal

RAYMOND T. HIGA, PLA, ASLA
Associate Principal

DACHENG DONG, LEED® AP
Associate Principal

NATHALIE RAZO
Associate Principal

ANN MIKIKO BOUSLOG, PhD
Director of Land Economics & Real Estate

RAMSAY R. M. TAUM
Cultural Sustainability Planner

ETSUYO KILA
Senior Associate

GREG NAKAI
Senior Associate

BRADLEY FURUYA, AICP
Associate

C.R. ʻIMIPONO WICHMAN
Associate

THERESA DEAN
Associate

R. STAN DUNCAN, PLA, ASLA
Chairman Emeritus

RUSSELL Y. J. CHUNG, PLA, FASLA
Principal Emeritus

THOMAS S. WITTEN, FASLA
Principal Emeritus

W. FRANK BRANDT, FASLA
Founding Partner

1001 Bishop Street, Suite 650
Honolulu, Hawaiʻi 96813-3484
Tel: (808) 521-5631
Fax: (808) 523-1402
E-mail: sysadmin@pbrhawaii.com

printed on recycled paper

May 18, 2026

Ms. Mary Smart
mghsmart@yahoo.com

SUBJECT: HRS CHAPTER 343 ENVIRONMENTAL ASSESSMENT (EA) – MILILANI HIGH SCHOOL TEACHER WORKFORCE HOUSING PROJECT, MILILANI, OʻAHU, PORTIONS OF TAX MAP KEYS (TMKs) 9-5-001: 017 AND 054

Dear Ms. Smart:

Thank you for your email dated February 19, 2026, regarding the subject Project. As the planning consultant to Pacific Housing Assistance Corporation (PHAC), which is the developer working with the School Facilities Authority (SFA) on the Mililani High School Teacher Workforce Housing Project, we are thankful for your comments and offer the following responses:

1. From the beginning, the rationale for the Project has been to provide urgently needed housing at rents that are affordable for Hawaiʻi Department of Education (DOE) teachers and employees. Mililani was selected as the site for the state's first teacher workforce housing development because of its central location on Oʻahu and ability to serve multiple districts. A study commissioned by the DOE confirmed there is a great need for affordable housing in Mililani. The Project's objective will be clarified in Section 2.2 of the Final EA: *"The objective of this project is to offer new multifamily rental unit options at affordable rents, prioritizing Hawaiʻi's teachers and DOE employees."*

2. PHAC explored multiple options and alternatives as part of the planning and environmental review process and was responsive to feedback from the community.

3. Monthly rent for the Project units is dependent on development and construction costs, as well as HUD-established rental rates (updated annually) when the Project is complete.

4. To minimize the land area utilized for the proposed Project, higher density is being proposed. According to the City and County of Honolulu zoning maps, there are large areas bounded by Meheula Parkway, Anania Drive, and Lanikuhana Avenue that currently permit buildings up to 60 feet in height. The visual impact of the proposed Project is intended to be mitigated by the large trees on Meheula Parkway and Project landscaping.

5. The Draft EA included a Transportation Impact Assessment Report (TIAR) prepared by AECOM, which stated in part:

   "The additional traffic generated by the proposed Teacher Workforce Housing site is projected to have a minimal impact on the peak period intersection operations for the surrounding intersections. The analysis indicated that there was very little change to the delay and LOS between the build and no build scenarios with all intersections or key turning movements operating at a LOS D or better."

6. SFA is currently working with DOE to identify a nearby site on campus to replace/relocate the existing 48-stall parking that will be displaced in order to implement the proposed Project. This will be acknowledged in the Final EA. Figure 5b of the Final EA shows the proposed location of the replacement parking within the campus. The proposed replacement parking lot will be paved and have access from a campus driveway. It should be noted that this proposed replacement parking lot will provide access to athletic fields and events.

7. The Project seeks to follow DOE’s commitment to the Harm to Students Law (Act 156, Session Laws of Hawai‘i 2024).

8. Your concern about teacher workforce housing on Mililani High School land is acknowledged.

9. We cannot comment on a prior offer to build teacher workforce at “West Oahu Community College.”

10. We acknowledge your lack of confidence in the implementation of the Project in time and on budget.

We believe that the schools in Mililani are one of the reasons that O‘ahu residents want to raise their families there, and to keep DOE teachers (including Mililani teachers), the commitment of 86,031 square feet of land (out of four square miles – or approximately 111.5 million square feet – that comprise Mililani Town) for the proposed Project, will help to make Mililani Town an even more desirable and valued place to live.

We value your participation in the environmental review process. Your email and our response will be reproduced in the forthcoming Final EA.

Sincerely,

PBR HAWAII

Greg Nakai
Senior Associate

cc: Lacey Shimabukuro, PHAC
Karen Arakawa, PHAC

From: sysadmin
To: Greg Nakai
Subject: Fw: Housing
Date: Wednesday, February 11, 2026 3:02:52 PM

From: Marsha Wellein <welleinmd@hotmail.com>
Sent: Wednesday, February 11, 2026 1:52 PM
To: sysadmin <sysadmin@pbrhawaii.com>
Subject: Housing

Warning: Unusual sender <welleinmd@hotmail.com>

You don't usually receive emails from this address.
Make sure you trust this sender before taking any actions.

Teachers need housing— as a professional educator for 50 yrs- I know! I left DOE HI teaching years ago due to low pay and no housing. Dr W
Sent from my iPhone
Dr. Marsha Diane (Akau) Wellein https://linkprotect.cudasvc.com/url?a=https%3a%2f%2fwww.marshawelleinbooks.com&c=E,1,y9bTUAUrYusqTlAzIvQoLQyBgdMWycrY6r-qxlolpofyewN4NmlJjvR0SkIq3mYiSuI8RG9vvQAtNW8SRvgfZJtF8-0If2PogzDKufxS8wZcYf1KM7BW&typo=1

PBR HAWAII
& ASSOCIATES, INC.

KIMI MIKAMI YUEN, LEED® AP BD+C
President / Chairperson

VINCENT SHIGEKUNI
Executive Vice-President / Principal

GRANT T. MURAKAMI, AICP, LEED® AP BD+C
Executive Vice-President / Principal

CATIE CULLISON, AICP
Senior Vice-President / Principal

TOM SCHNELL, AICP
Vice-President / Principal

MARC SHIMATSU, PLA, ASLA
Vice-President / Principal

RAYMOND T. HIGA, PLA, ASLA
Associate Principal

DACHENG DONG, LEED® AP
Associate Principal

NATHALIE RAZO
Associate Principal

ANN MIKIKO BOUSLOG, PhD
Director of Land Economics & Real Estate

RAMSAY R. M. TAUM
Cultural Sustainability Planner

ETSUYO KILA
Senior Associate

GREG NAKAI
Senior Associate

BRADLEY FURUYA, AICP
Associate

C.R. 'IMIPONO WICHMAN
Associate

THERESA DEAN
Associate

R. STAN DUNCAN, PLA, ASLA
Chairman Emeritus

RUSSELL Y. J. CHUNG, PLA, FASLA
Principal Emeritus

THOMAS S. WITTEN, FASLA
Principal Emeritus

W. FRANK BRANDT, FASLA
Founding Partner

May 18, 2026

Dr. Marsha Diane (Akau) Wellein
welleinmd@hotmail.com

SUBJECT: HRS CHAPTER 343 DRAFT ENVIRONMENTAL ASSESSMENT (EA) – MILILANI HIGH SCHOOL TEACHER WORKFORCE HOUSING PROJECT, MILILANI, O'AHU, PORTIONS OF TAX MAP KEYS (TMKs) 9-5-001: 017 AND 054

Dear Dr. Wellein:

Thank you for your email dated February 11, 2026, regarding the subject Project. As the planning consultant to Pacific Housing Assistance Corporation (PHAC), which is the developer working with the School Facilities Authority on the Mililani High School Teacher Workforce Housing Project, we are thankful for your comments. We appreciate your support for teacher housing, especially as a former Department of Education teacher.

We value your participation in the environmental review process. Your email and our response will be reproduced in the forthcoming Final EA.

Sincerely,

PBR HAWAII

Greg Nakai
Senior Associate

cc: Lacey Shimabukuro, PHAC
Karen Arakawa, PHAC

1001 Bishop Street, Suite 650
Honolulu, Hawai'i 96813-3484
Tel: (808) 521-5631
Fax: (808) 523-1402
E-mail: sysadmin@pbrhawaii.com

printed on recycled paper

Appendix M

Parking Demand Study

(This page intentionally left blank.)

Mililani High School Teacher Workforce Housing

Parking Demand Study

95-1200 Meheula Parkway, Mililani, Hawaii 96789
TMKs: (1) 9-5-001:017 and 054 (portions)

Prepared by:
PBR HAWAII & Associates, Inc.

PBR HAWAII
& ASSOCIATES, INC.

May 2026

(This page intentionally left blank.)

Parking Demand Study

Mililani High School Teacher Workforce Housing

95-1200 Meheula Parkway, Mililani, Hawai‘i 96789

TMK: (1) 9-5-001:017 and 054 (portions)

Prepared by: PBR HAWAII & Associates, Inc.

May 2026

(This page intentionally left blank.)

Project Description

The proposed Project is a 95-unit affordable rental housing development on approximately 1.975 acres (86,031 square feet) of State of Hawai'i Department of Education (HIDOE) land on the lower campus of Mililani High School, fronting Meheula Parkway (see Site Plan).

The Project consists of:

- A five-story residential building comprising two four-story wings above an at-grade structured parking loop, connected by an enclosed bridge. The building contains 95 rental units (56 one-bedroom and 39 two-bedroom), a resident manager unit, laundry lounges on each residential floor, and a second-floor teacher resource room.
- A freestanding single-story amenity structure (Amenity Hale) in the central courtyard, housing a recreation room, fitness room, restroom, and storage. The Amenity Hale is for use only by residents of the project, and is thus an accessory to the residential use.
- A property management office (320 square feet) and on-site structured and surface parking.

All 95 units are deed-restricted as affordable for a period of 65 years, serving households at 60%, 80%, and 120% of Area Median Gross Income (AMGI). Units are prioritized for HIDOE teachers and educational staff.

Regulatory Framework

Off-street parking requirements within the City and County of Honolulu are governed by LUO Chapter 21, Article 6. For this Project, two use categories apply under Table 21-6.1.

- *RESIDENTIAL AND LODGING: Household living – multi-unit dwellings*

  Residential parking is required at 1 stall per 1,000 square feet of net private dwelling area (excluding common areas per LUO § 21-6.20(b)(2)(A)).

- *COMMERCIAL 1: Office – general office*

  The accessory property management office is classified as general office use, requiring 1 stall per 500 square feet of gross floor area.

Parking Demand Calculation

The net residential dwelling area used for parking calculations is 62,860 square feet, representing the aggregate private floor area of all 95 units, excluding common circulation, laundry rooms, community spaces, and other shared amenity spaces. The management office contributes 320 square feet of general office floor area. Applying the LUO ratios yields the following minimum requirements (Table 1):

Table 1: Parking Demand Calculation

Use category	LUO standard	Calculation basis	Required stalls	Ratio / unit
RESIDENTIAL AND LODGING Household living – multi-unit dwellings	1 per 1,000 SF net dwelling area	62,860 SF ÷ 1,000	63 stalls	0.66
COMMERCIAL 1 Office - general office	1 per 500 SF gross floor area	320 SF ÷ 500	1 stall	N/A
Total required			**64 stalls**	**0.67**

Survey and Focus Groups

HIDOE contracted SMS Research get a better understanding of HIDOE's current employees' housing situations and preferences with the goal of informing potential housing support initiatives and improving employee retention. The survey was distributed online in April 2024 to all 22,541 salaried HIDOE employees statewide. A total of 9,668 employees responded, resulting in a 43% response rate. The responses provided a representative sample across the State and by County. A presentation of the survey is attached to the Environmental Assessment (EA) as Appendix D.

According to the survey, parking was indicated as an important amenity among employees interested in workforce housing. Additionally, in focus groups that were conducted by Anthology FINN Partners in April 2024, parking was mentioned several times as important to current teachers working less than 5 years.

Proposed Parking Provision

The Project proposes a total of 150 off-street parking stalls, exceeding the 64-stall LUO minimum by 86 stalls (see Table 2). This represents a supply ratio of approximately 1.58 stalls per unit for the residential component. Parking is provided in a combination of at-grade structured parking beneath the residential wings and surface parking areas within the site (see Site Plan). The 150 parking stalls will include 103 standard, 36 tandem pair stalls, 6 ADA stalls, and 5 visitor stalls.

Table 2: Proposed Parking

Use category	LUO standard	Calculation basis	Required stalls	Proposed Parking	Difference
RESIDENTIAL AND LODGING Household living – multi-unit dwellings	1 per 1,000 SF net dwelling area	62,860 SF ÷ 1,000	63 stalls (parking ratio of 0.66 per unit)	149 parking stalls	Proposed parking provides 86 more stalls than required for a parking ratio of 1.58 stalls per unit
COMMERCIAL 1 Office - general office	1 per 500 SF gross floor area	320 SF ÷ 500	1 stall	1 stall	0
Total			**64 stalls**	**150 stalls**	

Conclusion

The Mililani High School Teacher Workforce Housing project satisfies the off-street parking requirements of the City and County of Honolulu Land Use Ordinance. The Project proposes 150 total parking stalls – 86 stalls (134%) above the LUO minimum of 64 – at a ratio of 1.57 stalls per unit.

Although proposed parking exceeds LUO requirements, developer experience has shown that inadequate parking negatively impacts rentability of units. Based on the results of the survey and focus groups conducted, it is anticipated that this would be the case for the target group for this project in particular, since most teachers drive and the residents of the project will not necessarily be working in Mililani.

WRNS STUDIO
677 ALA MOANA BLVD
8TH FLOOR, STE. 815
HONOLULU
HAWAII 96813
808.356.5860 TEL
415.358.9100 FAX
WWW.WRNSSTUDIO.COM

1 SITE PLAN
1" = 20'-0"

ZONING SUMMARY

	REQUIREMENT ROH 21-6	PROPOSED
OFF-STREET PARKING:	RESIDENTIAL: 1 PER 1,000 SF DWELLING = 64 STALLS GENERAL OFFICE: 1 PER 500 SF = 1 STALLS TOTAL LUO REQUIRED PARKING = 64 EV PARKING: 0 STALLS REQUIRED (ROH 16B-1.1(25))	STALL TYPE / STALL SIZE / COUNT ACCESSIBLE / 8.5' x 18' (5' Aisle) / 5 ACCESSIBLE / 8.5' x 18' (8' Aisle) / 1 STANDARD / 8'-6" x 18' / 93 STANDARD 8'-3" / 8'-3" x 18' / 10 TANDEM / 8'-6" x 18' Tandem / 36 VISITOR / 8'-6" x 18' Visitor / 5 TOTAL PARKING STALLS 150 2 EV STALLS (ONE ADA STALL, ONE STANDARD STALL)
OFF-STREET LOADING:	MULTI-UNIT DWELLINGS 20-150: 1 LOADING STALL	1 LOADING STALL
OFF-STREET LOADING SIZE:	19 FT x 8.5 FT x 10 FT	18 FT x 8.5 FT x 7.5 FT
BICYCLE PARKING:	LONG-TERM: 48 STALLS SHORT TERM: 11 STALLS	BICYCLE STALL TYPE / STALL SIZE / COUNT LONG-TERM BICYCLE / 2'-0" x 6'-0" / 27 SHORT-TERM BICYCLE / 2'-0" x 6'-0". / 6 TOTAL BICYCLE STALLS 33 27 LONG-TERM BICYCLE STALLS 6 SHORT TERM BICYCLE STALLS

MILILANI HIGH SCHOOL TEACHER WORKFORCE HOUSING

PROJECT NO.: 24028.00
DATE: 03/23/2026
SCALE: As indicated

SHEET TITLE:
SITE PLAN

SHEET NO:
A0

Autodesk Docs://24028.00 Mililani HS Teacher Housing (R2025)/MTH-ARC_V2.rvt
2/27/2026 10:42:16 AM

All drawings and written material appearing herein constitute original and unpublished work of the Architect/Engineer and may not be duplicated, used or disclosed without consent of Architect/Engineer.

If this drawing is not 30"x42", then the drawing has been revised from its original size. Noted scales must be adjusted. This line should be equal to one inch.