Draft Environmental Assessment

KAPULENA WELL & RESERVOIR

PREPARED FOR:
Department of Water Supply
County of Hawai‘i

PREPARED BY:
PLANNING SOLUTIONS

APRIL 2009

PROJECT SUMMARY

Project:	**KAPULENA WELL & RESERVOIR**
Applicant/Approving Agency:	Department of Water Supply County of Hawai‘i 345 Kekūanaō‘a Street., Suite 20, Hilo, HI 96720 Contact: Terrence I. Nago, P.E. (808) 961-8070 ext. 250
Location:	Hāmākua District; Island of Hawai‘i
Tax Map Keys:	4-7-02:29 and 4-7-02:35
Parcel Area	0.104 acres and 41.303 acres
Project Site Area	Approximately 0.63 acres
State Land Use District:	Agriculture
County Zoning	Ag-40a
Proposed Action:	The Department proposes to drill, test, and, if successful, convert the well to a production well with a 0.3 MG storage tank. Electrical power and telephone service will be extended to the site from existing lines on Honoka‘a-Waipi‘o Road. A single-story control building will be constructed on the site to house a chlorination system and control center. An on-site drainage system will also be constructed, and the existing access driveway extended and upgraded. Water from the well will replace the surface water source of the abandoned Kukuihaele (Wai‘ulili) Spring.
Associated Actions Requiring Environmental Assessment:	Proposed use of County land & funds, and federal funds.
Consultation	The State Historic Preservation Division and State Department of Health (Safe Drinking Water Branch) were consulted during the preparation of this EA. The document will also be sent to the individuals and agencies listed in Table 7.1 for review and comment.
Required Approvals	• Hawai‘i County Building Permit • Hawai‘i County Plan Approval • Well Construction Permit • Pump Installation Permit, State Water Commission • Certification of Well for Drinking Water Use, State Department of Health (DOH) • Grading Permit, Hawai‘i County • Construction Permit, DOT State Highways Division • Construction Noise Variance (possible)
Anticipated Determination	Finding of No Significant Impact
Consultant:	Planning Solutions, Inc. 210 Ward Avenue, Suite 330 Honolulu, HI 96814 Contact: Perry White (808) 550-4483

TABLE OF CONTENTS

LIST OF FIGURES

LIST OF TABLES

1.0 PURPOSE OF & NEED FOR THE PROJECT

1.1 INTRODUCTION

The Hawai‘i County Department of Water Supply (DWS) is responsible for the development, operation, and maintenance of the municipal water systems throughout the Island of Hawai‘i. Historically, DWS supplied the needs of its customers in the Kukuihaele area using water from Kukuihaele (Wai‘ulili) Spring. The State Safe Drinking Water Branch (SDWB) conducted a sanitary survey of the spring in June 2005 and found that a concrete intake box receiving the source water was not completely sealed to the outside environment. Instead, the box was only partially enclosed with boulders stacked to form the back wall of the structure so that daylight was visible through the boulders. Based on this, SDWB determined that the spring is a groundwater source under the direct influence of surface water (GWUDI, ref. Hawai‘i Administrative Rules Chapter 11-20). That designation means that DWS must either install enhanced treatment systems before using water from the spring source or switch to an alternate water source.

Furthermore, in the aftermath of the October 2006 offshore earthquake near the Island of Hawai‘i, the Kukuihaele (Wai‘ulili) Spring was under producing at a rate of 6,000 GPD, a drastic decline from the 70,000 GPD demand it was able to supply to the Kukuihaele Water System. As a result, the spring became inefficient for DWS to operate and maintain. In 2007, while still developing plans to address the quality issue raised by the GWUDI designation, DWS ceased use of the Kukuihaele (Wai‘ulili) Spring. Because of the aforementioned issues, all water is currently being trucked in.

In order to eliminate the excessive costs associated with trucking in water and to avoid constructing and operating facilities for enhanced water treatment that are required for GWUDI drinking water sources, DWS proposes to replace the spring and trucked-in sources with a new well. The proposed well would provide a cost-effective means of meeting current and anticipated Federal requirements. For these reasons, the State Department of Health Safe Drinking Water Branch has rated replacement of this water source as its number one priority for water system developments in the State (SDWB 2009).

1.2 PURPOSE OF & NEED FOR THE PROJECT

1.2.1 LOCATION AND EXISTING USE OF THE PROPOSED SITE

The proposed well and 0.30 million gallon (MG) reservoir would be constructed adjacent to the DWS’s existing 0.05 million gallon (MG) 0.104 acre Kapulena Homestead Reservoir site (TMK: 4-7-02:29). The two tanks would be interconnected to provide redundancy for the Kukuihaele Water System. The new well and reservoir would be located on a portion of TMK 4-7-02:35, a 41.303-acre parcel, a privately owned parcel that surrounds the existing tank site. Currently, this area is a producing macadamia nut orchard. The large parcel from which the well site would be subdivided is located adjacent to the Honoka‘a-Waipi‘o Road to the north and the Kawaikalia Stream to the west (see Figure 1.1 and Figure 1.2). The County of Hawai‘i has an agreement in place with the landowner for the site’s fee-simple purchase should the present project be approved.

An existing overhead electrical line on the property provides power for the existing DWS facility and is connected to the HELCO electrical distribution line across Honoka‘a-Waipi‘o Road. The DWS will upgrade this existing single-phase electrical line to a three-phase circuit for the new facilities.

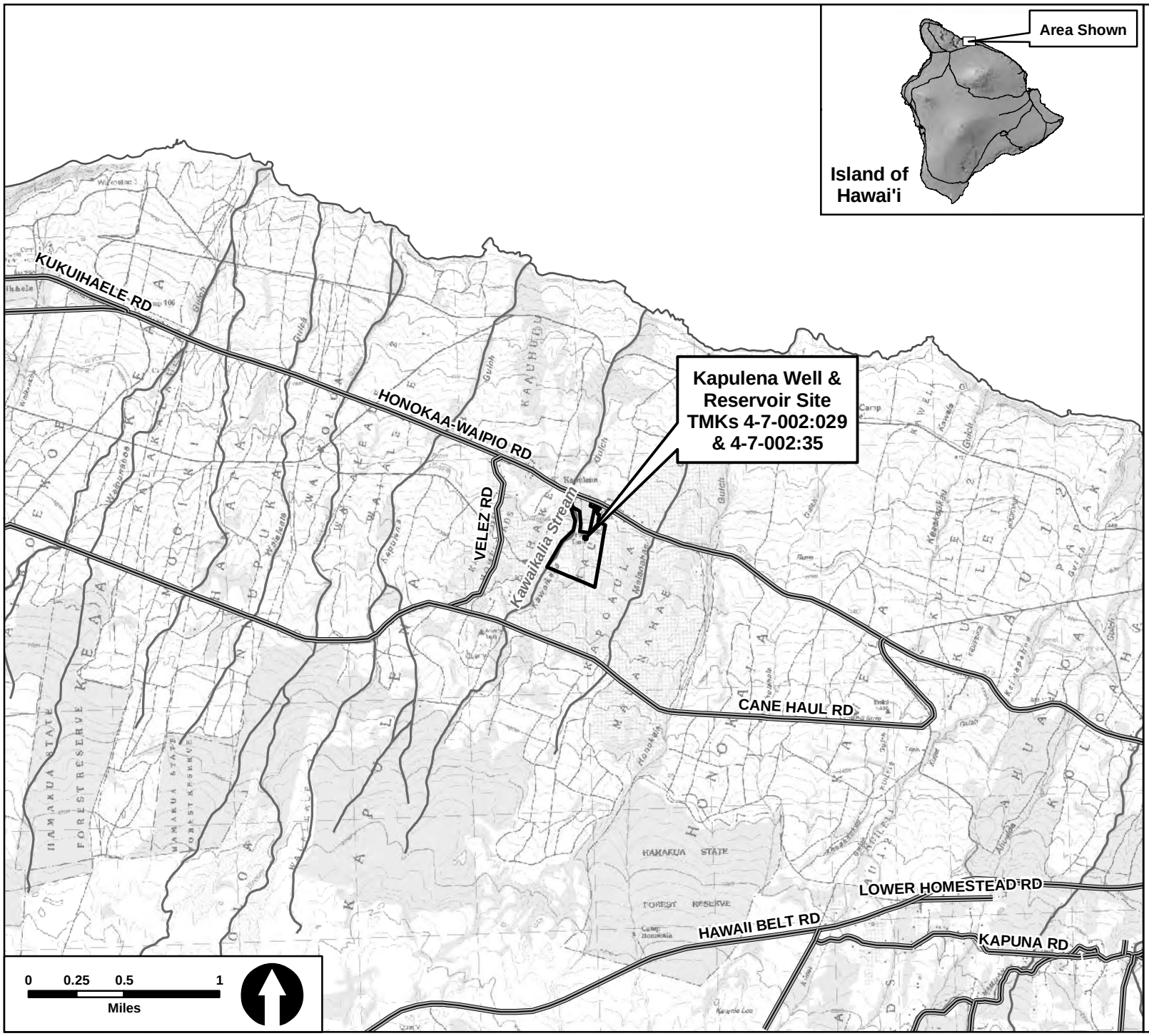

Legend:

Roadways

Streams

Prepared For:

Tom Nance Water Resource Engineering

Prepared By:

PLANNING SOLUTIONS

Sources:

-State of Hawaii GIS
-USGS 7.5 Quad Map(s)

Figure 1.1:

Location Map

Kapulena Well & Reservoir

Figure 1-1 Project Location 2009-04-10.mxd

Existing DWS 0.05 MG Kapulena Homestead Reservoir.

Existing overhead electrical line on the property.

Prepared For:

Dept. of Water Supply,
County of Hawai`i

Prepared By:

PLANNING SOLUTIONS

Source:

-Planning Solutions, Inc.
(*Photo taken January 19, 2009*)
-TNWRE

Figure 1.2:

Existing Facilities

Kapulena Well & Reservoir

Figure 2-1 Existing Facilities 2009-03-20.cdr

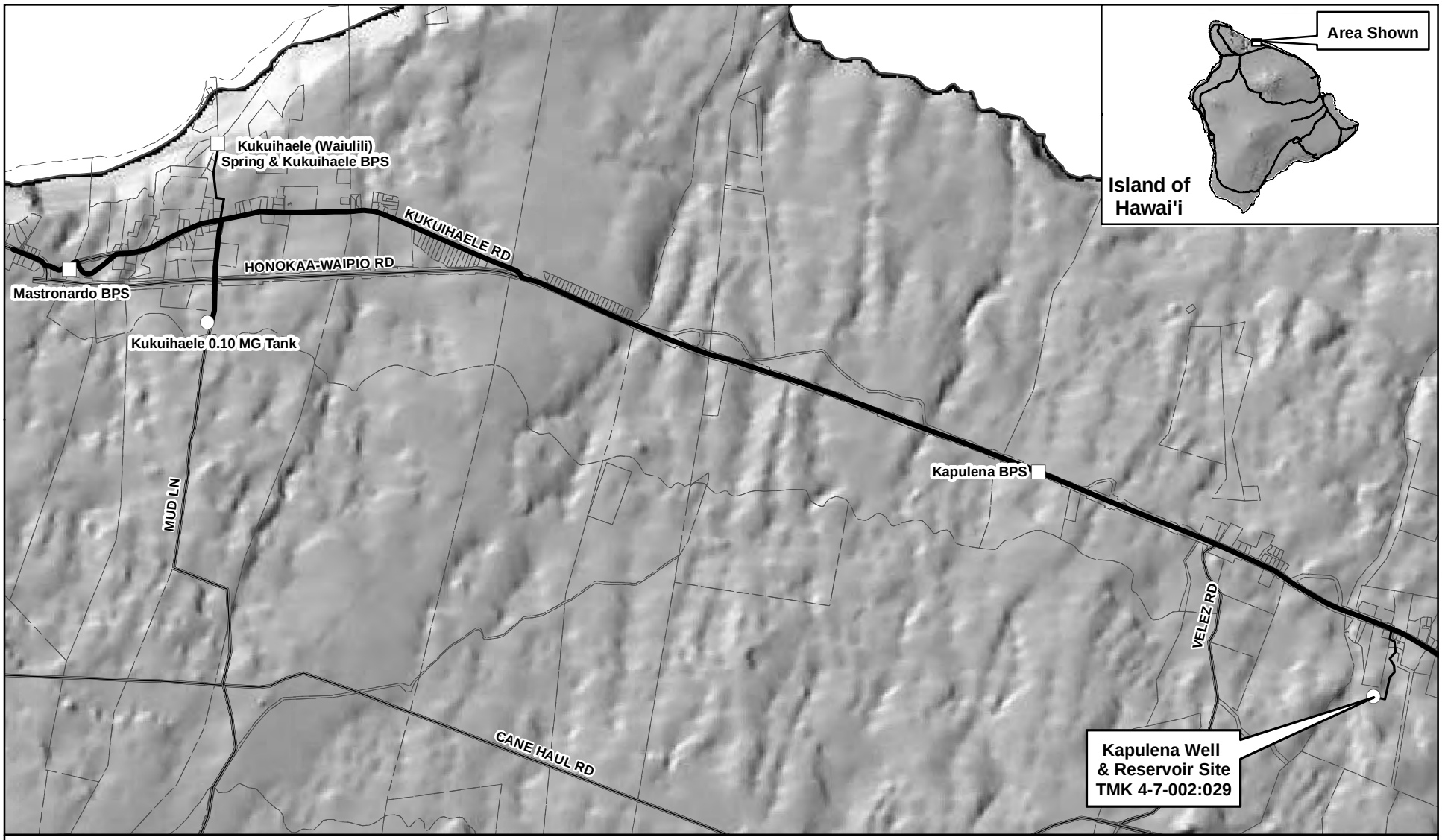

Prepared For:

TNWRE

Prepared By:

PLANNING SOLUTIONS

Source:

State of Hawaii GIS
R.W. Beck
Appendix B-22: Existing System Kukuihaele

Legend:

- Pump Station
- Reservoir
- TMK Parcel Boundaries
- Existing 4" Water Line
- Existing 6" Water Line

0 0.375 0.75 1.5
Miles

Figure 1.3:

Existing Kukuihaele Water System

Kapulena Well & Reservoir

Figure 1-3 Existing Kukuihaele Water System 2009-04-10.mxd

1.2.2 NEED FOR ADDITIONAL WATER STORAGE

According to the DWS *Water Master Plan*, the Kukuihaele Water System requires an additional 0.15 million gallons of water storage to maintain adequate potable water and firewater reserves up to the year 2025 (DWS 2006). DWS expects the well to be capable of providing significantly more water than required by the Kukuihaele System. The proposed design includes a new, 0.30 MG reservoir, which will be able to provide the needed capacity for the Kukuihaele System as well as flexibility for future service for adjacent water systems if necessary. As noted above, if the present proposal for additional storage at the site is approved, the existing 0.05 MG reservoir will connect to the proposed 0.30 MG reservoir, thus enhancing the water storage and reliability to the system.

1.3 OBJECTIVES OF THE PROPOSED ACTION

DWS' objectives for the proposed project include the following:

- Replace surface water source and costly trucked in water due to abandoned Kukuihaele (Wai'ulili) Spring;
- Enhance the water storage capacity for its Kukuihaele Water System;
- Provide a high-quality water source for the Kukuihaele Water System; and
- Continue to provide DWS customers in the Kukuihaele area with an adequate supply of affordable and high-quality potable water.

1.4 ORGANIZATION OF THE ENVIRONMENTAL ASSESSMENT

The remainder of this EA is organized as follows:

- Chapter 2 describes the proposed action in detail and outlines the alternatives analyzed in this EA, as well as other alternatives that were considered and rejected during earlier planning phases.
- Chapter 3 describes the existing environment and analyzes the potential for impacts on environmental, cultural, and socioeconomic resources. It also outlines strategies for minimizing and mitigating unavoidable adverse effects.
- Chapter 4 discusses the consistency of the proposed well and reservoir with relevant plans, policies, and controls at local, regional, state, and federal levels.
- Chapter 5 provides justification for the anticipated determination of a Finding of No Significant Impact (FONSI) by considering each individual significance criterion with respect to the proposed project.
- Chapters 6 and 7, respectively, list the references cited and parties consulted during preparation of this EA.

THIS PAGE INTENTIONALLY LEFT BLANK

2.0 PROPOSED ACTION & ALTERNATIVES CONSIDERED

2.1 DESCRIPTION OF THE PROPOSED ACTION

DWS proposes to construct a new exploratory well on private property in the Hāmākua District of the Island of Hawai‘i. Photographs of property are presented in Figure 2.1. If pump tests confirm that the well’s yield is adequate and suitable for use as drinking water, DWS will convert the well into a production facility, install a new 0.30 MG reservoir, and connect the reservoir to an existing DWS 0.05 MG tank that is already in service at the site (see Figure 2.2). Included in the project are the following installations:

- A 200 gallon per minute (GPM), 100 horsepower submersible well pump and motor;
- A 26’ X 45’4” control building;
- A 8 foot diameter and 7 feet 11 inches deep seepage pit (installed with the exploratory well);
- Chlorination equipment (to be housed in the control building);
- A 0.30 MG reinforced concrete water storage tank;
- A Supervisory Control and Data Acquisition (SCADA) system; and
- Upgrading of an existing access way to the new facilities from Honoka‘a-Waipi‘o Road.

Figure 2.3 contains a detailed site plan. Details concerning the well drilling, pump installation, testing, outfitting, and operation are provided below, along with a description of the proposed reservoir and associated site improvements.

2.1.1 DESIGN OF THE PROPOSED FACILITIES: EXPLORATORY WELL

Preliminary plans call for the well to extend from the planned finished grade of the well pad at 1,033 feet above mean sea level (MSL) to a depth of about -87’ MSL. The borehole will have a diameter of 25 inches. As shown in Section A of Figure 2.4, solid steel casing (18” inner diameter) will be installed in the upper 1,020 feet of the hole. Below that will lie 90 feet of perforated casing. The upper 833 feet of the annulus space between the outside of the boring and the solid casing will be filled with cement grout. The exploratory well will be drilled and tested using diesel-powered equipment. Hence, the site will not require electrical power during the exploratory phase of development.

Pump-testing will be at rates up to 700 gallons per minute and may extend up to 5 consecutive days. Present plans call for the water from these tests to be disposed of in a seepage pit constructed on site. The contractor may seek approval for the disposal of pumped water off site if necessary, subject to NPDES requirements of the State Department of Health (Hawai‘i Administrative Rules 11-55, Appendix I).

2.1.2 DESIGN OF THE PROPOSED FACILITIES: PRODUCTION WELL & RESERVOIR

2.1.2.1 Well Pump & Equipment

If the results of the pump-test confirm that the well is suitable for production, the Kapulena Well will be outfitted with a 100-horsepower, 200 GPM submersible well pump (see Section B in Figure 2.4 and Figure 2.5). A new water-level transmitter will be installed with the new 0.30 MG reservoir and connected to the proposed new SCADA system that will control both it and a transmitter connected to the existing 0.05 MG reservoir. In concert, these transmitters will enable automatic start/stop operation of either the well pump or the existing pump at the 0.05 MG reservoir, and remote control from the Waimea base yard, as needed.

A. Current entry to parcel and neighboring properties to be used as a facility entry.

B. Honoka'a-Waipi'o Road from entry looking north.

C. Existing driveway to be upgraded to access to the project site..

D. Proposed well and reservoir site.

Prepared For:

Dept. of Water Supply,
County of Hawai`i

Prepared By:

PLANNING SOLUTIONS

Sources:

Planning Solutions, Inc.
January 16, 2009

Figure 2.1:

Photographs of Well & Reservoir Site

Kapulena Well & Reservoir

Figure 2-1 Photographs of Well & Reservoir Site 2009-03-20.cdr

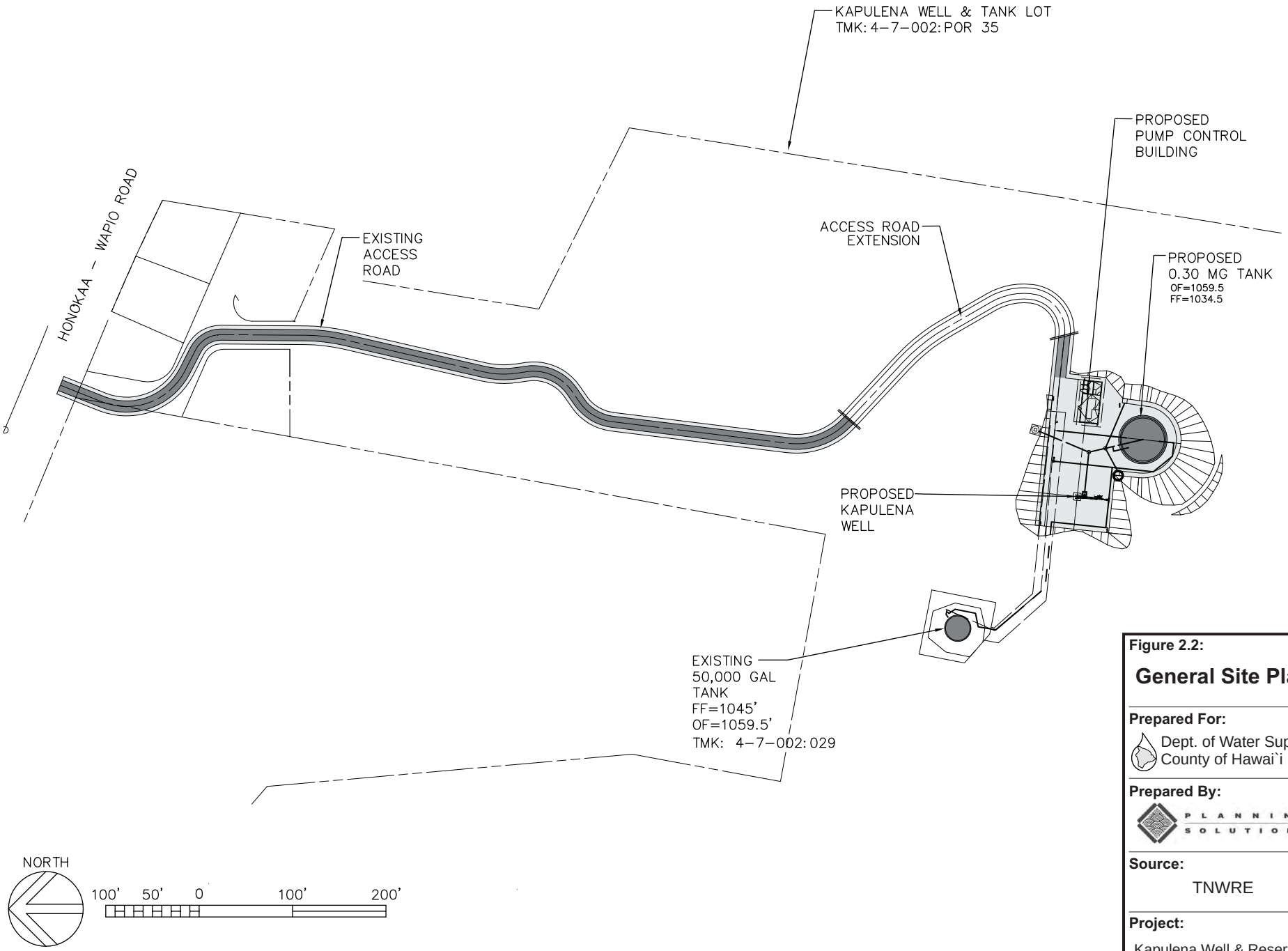

Figure 2.2:

General Site Plan

Prepared For:

Dept. of Water Supply, County of Hawai`i

Prepared By:

PLANNING SOLUTIONS

Source:

TNWRE

Project:

Kapulena Well & Reservoir

Figure 2-2 Site Plan 2009-04-20.cdr

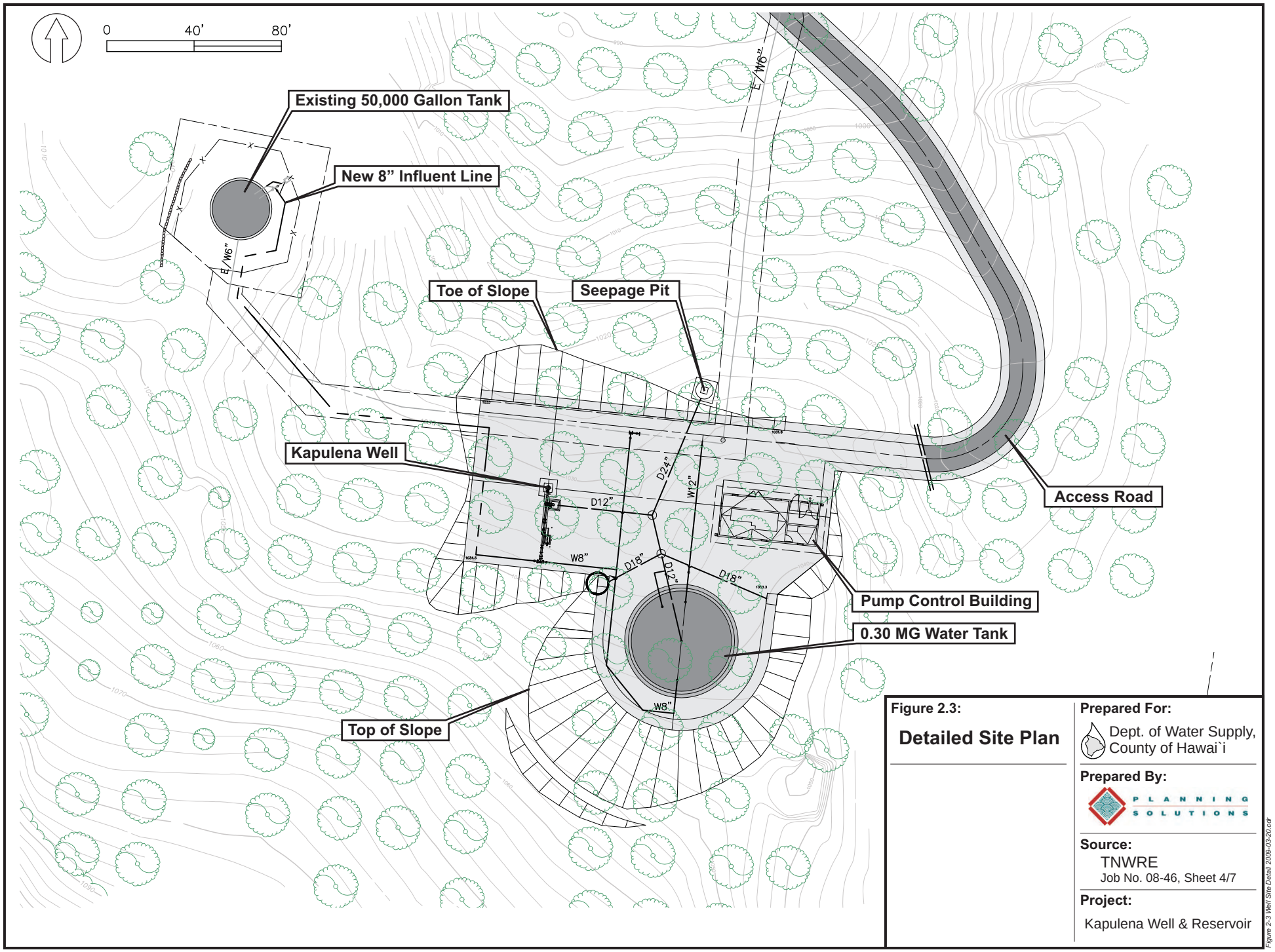

Figure 2.3:

Detailed Site Plan

Prepared For:

Dept. of Water Supply, County of Hawai`i

Prepared By:

PLANNING SOLUTIONS

Source:

TNWRE
Job No. 08-46, Sheet 4/7

Project:

Kapulena Well & Reservoir

Figure 2-3 Well Site Detail 2009-03-20.cdr

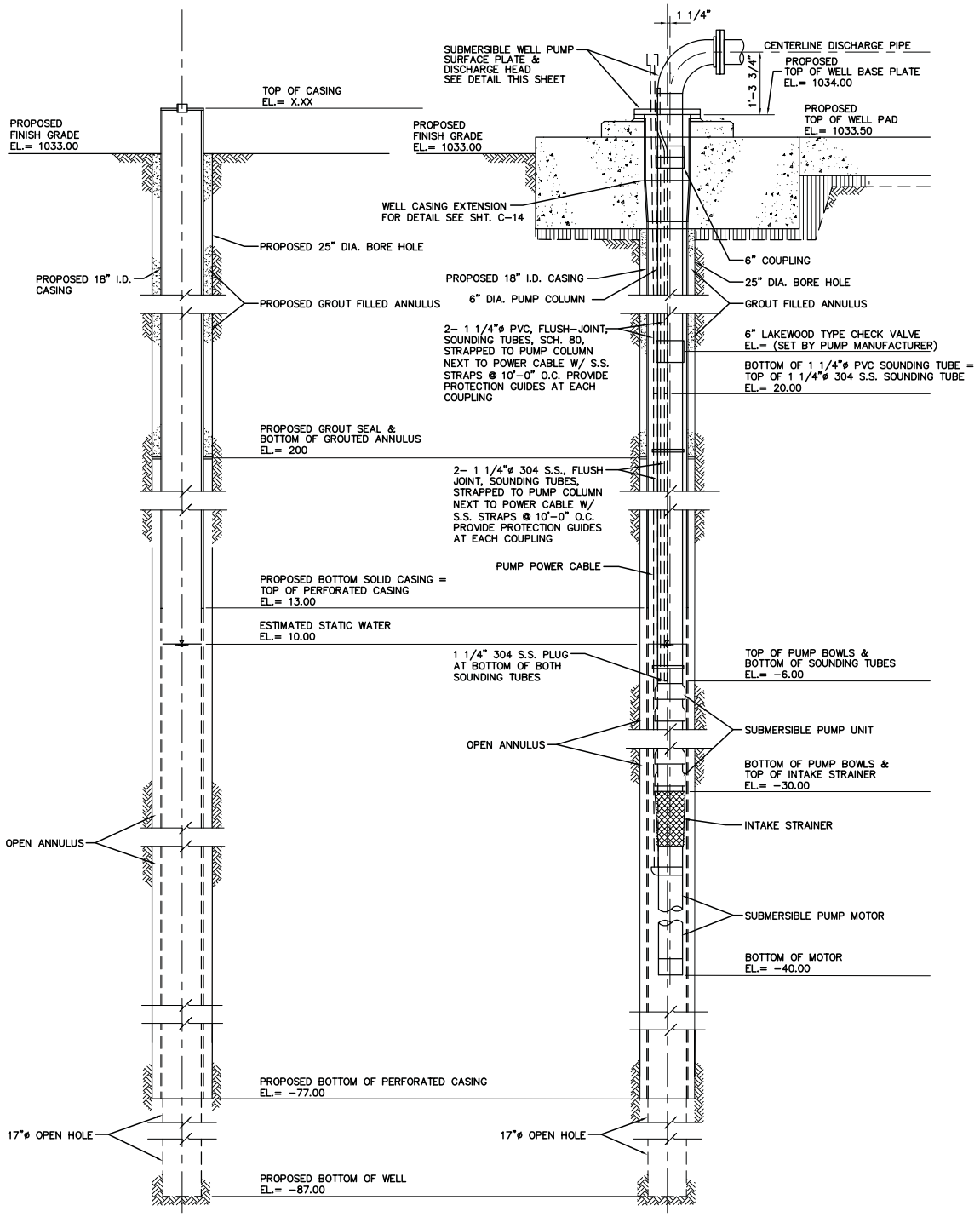

PROPOSED WELL SECTION "A"
NOT TO SCALE

NEW PUMP INSTALLATION SECTION "B"
NOT TO SCALE

Figure 2.4:

Exploratory & Production Well Sections

Prepared For:

Dept. of Water Supply, County of Hawai`i

Prepared By:

PLANNING SOLUTIONS

Source:

TNWRE
Job No. 08-46, Sheet 5/7

Project:

Kapulena Well & Reservoir

Figure 2-4 Well Shaft Sections 2009-03-02.cdr

ITEM NO.	DESCRIPTION
1	6" DISMANTLING JOINT, ROMAC MODEL NO. DJ400
2	6" D.I. PIPE, FE, 4'-8" LONG
3	TEST GAUGE CONNECTION
4	PRESSURE SWITCH UNIT
5	SAMPLING COCK, SEE DETAIL
6	6" D.I. TEE, FE
7	6" CENTER-GUIDED CHECK VALVE, FE
8	6" D.I. PIPE, FE, 5'-4" LONG, W/ DOUBLE STRAPPED SERVICE SADDLE
9	1 1/2" FLOW SWITCH, SEE SPECS.
10	6" ELECTRO-MAGNETIC METER, FE, WITH FLOW TRANSMITTER (SEE SPECIFICATIONS SECTION 304.10)
11	6" D.I. PIPE, FE, 3'-6" LONG
12	6" D.I. NIPPLE, PE, LENGTH TO FIT
13	1" AIR RELEASE VALVE, PRESSURE GAUGE: 0-30 PSI
14	6" GATE VALVE, FE (OS&Y)
15	6" 1/8 C.I. BEND, FE (CLASS 250)
16	6" D.I. PIPE, FExPE, LENGTH TO FIT
17	6" 1/8 D.I. BEND, MJ W/ MEGA-LUG RETAINER GLANDS
18	6"X12" D.I. INCREASER, MJ
19	6" D.I. NIPPLE, PE, LENGTH TO FIT
20	6" D.I. SPOOL, FE, 0'-9" LONG
21	6" RUBBER-SEATED BUTTERFLY VALVE (WAFER), FE, W/ DIAPHRAGM VALVE ACTUATOR
22	6" 1/4 C.I. BEND, FE (CLASS 250)
23	6" PUMP VACUUM RELEASE VALVE, FE
24	6" VENT SCREEN & FITTING
25	6" TIDEFLEX CHECK VALVE, SERIES 35, FE
26	6" FLANGED COUPLING ADAPTER

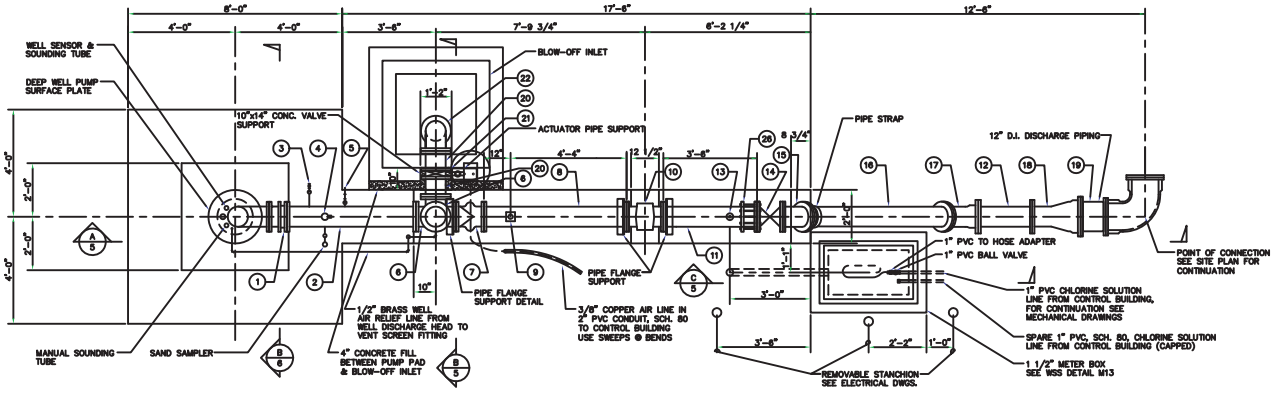

PLAN
SCALE: 1/2"=1'-0"

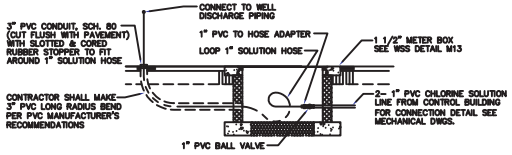

SECTION "C-C"
SCALE: 1/2"=1'-0"

NOTE:
1. FOR STRUCTURAL REINFORCING SEE STRUCTURAL DWGS.
2. CONTRACTOR TO ADJUST DIMENSION TO MATCH PUMP DISCHARGE ELBOW

NOTE:
ALL FLANGES SHALL BE FACED AND DRILLED IN ACCORDANCE WITH ANSI B-16.1 CLASS 125

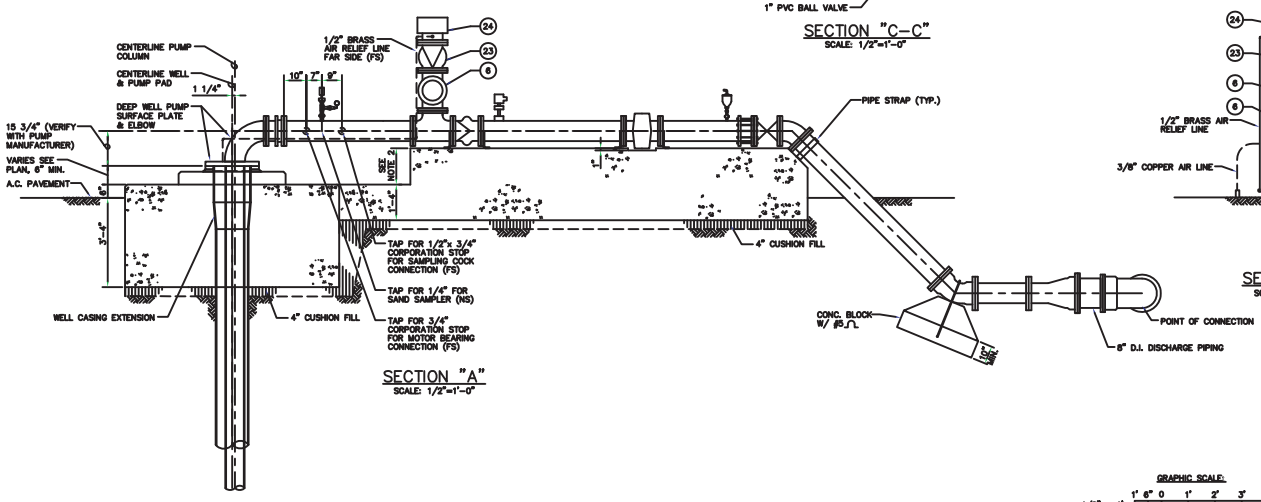

SECTION "A"
SCALE: 1/2"=1'-0"

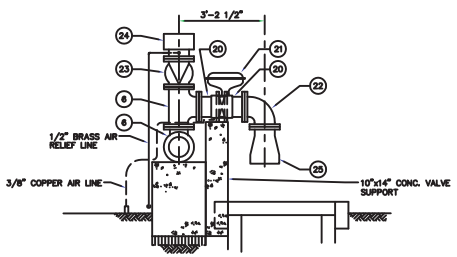

SECTION "B"
SCALE: 1/2"=1'-0"

GRAPHIC SCALE:
1/2" = 1'

Prepared For:

Dept. of Water Supply, County of Hawai`i

Prepared By:

PLANNING SOLUTIONS

Source:

TNWRE
Job. No. 08-46, Sheet 5/7
Rev. 03-09-09

Figure 2.5:

Well Pump Outfitting Plan & Sections

Kapulena Well & Reservoir

Figure 2-5 Well Pump Outfitting & Sections 2009-03-20.cdr

2.1.2.2 Site Preparation and Access Road

The currently undeveloped eastern portion of the well site will be graded to accommodate the production well facilities and access road extension. As shown on Figure 2.2, access to the site will be from an extension of the existing private road that serves the adjacent properties. DWS will obtain an easement over this road to permit access for maintaining the facility. Construction will require grading of 0.63 acres. The grading will also require excavation of approximately 885 cubic yards of material and an embankment of approximately 720 cubic yards

2.1.2.3 0.3 MG Reservoir

The proposed design calls for a standard DWS reinforced concrete tank with a capacity of 0.3 MG. The tank will have an approximately 46-foot diameter and 25-foot operating height. Tank piping will be a minimum of 8- and 12-inch diameter. It will be designed to Seismic Zone 4 design load standards (see Section 3.1.2 for discussion).

2.1.2.4 Control Building

The single-story concrete-block control building will house the chlorination equipment, motor control center, electrical control panel, SCADA system, and alarm system (see Figure 2.6). The outside dimensions of the structure will be approximately 26 feet by 45.25 feet, for a total footprint of approximately 1,176 square feet.

2.1.2.5 SCADA System

DWS plans to install a Supervisory Control and Data Acquisition (SCADA) system to monitor and control system operation. The SCADA facilities will be housed in the control building. The SCADA telemetry communication will be via phone service provided by Hawaiian Telcom. This will require telephone service to be extended to the site from the existing service line along Honokaʻa-Waipiʻo Road. Once constructed, the line will be dedicated to Hawaiian Telcom. This phone line will provide the telecommunication link with DWS's master SCADA unit located at their Waimea Baseyard.

2.1.2.6 Seepage Pit

A seepage pit will be constructed to the east of the proposed reservoir (see Figure 2.3). It is approximately 8 feet in internal diameter and 7 feet 11 inches deep (see Figure 2.8). During the exploration phase for the Kapulena Well and Reservoir, the seepage pit will receive water from the pump testing; once the well is operational, it will accommodate water from the pump startup. It will also collect water from the proposed reservoir in the unlikely event that it needs to be emptied for repair. Finally, the seepage pit will collect storm water runoff from most impermeable areas of the site.

2.1.2.7 Electricity & Communications

The proposed facility additions will require electrical power for lighting, pump control equipment in the control building, and for the well pump. The existing Hawaiʻi Electric Light Company (HELCO) three-phase power line along Honokaʻa-Waipiʻo Road has sufficient capacity to accommodate the additional electrical load. However, the existing single-phase electrical service connection from that power line to the property will need to be upgraded to three-phase power and extended overhead across the road and into the well and tank lot as part of this project. Underground service ducts will be installed from the new onsite service pole to a pad-mounted HELCO transformer for the proposed well pump station. The existing chlorination system at the 0.05 MG tank site will continue to utilize its existing HELCO connection. The service request for this pump station has been submitted to HELCO for processing. Utility metering will conform to HELCO's requirements.

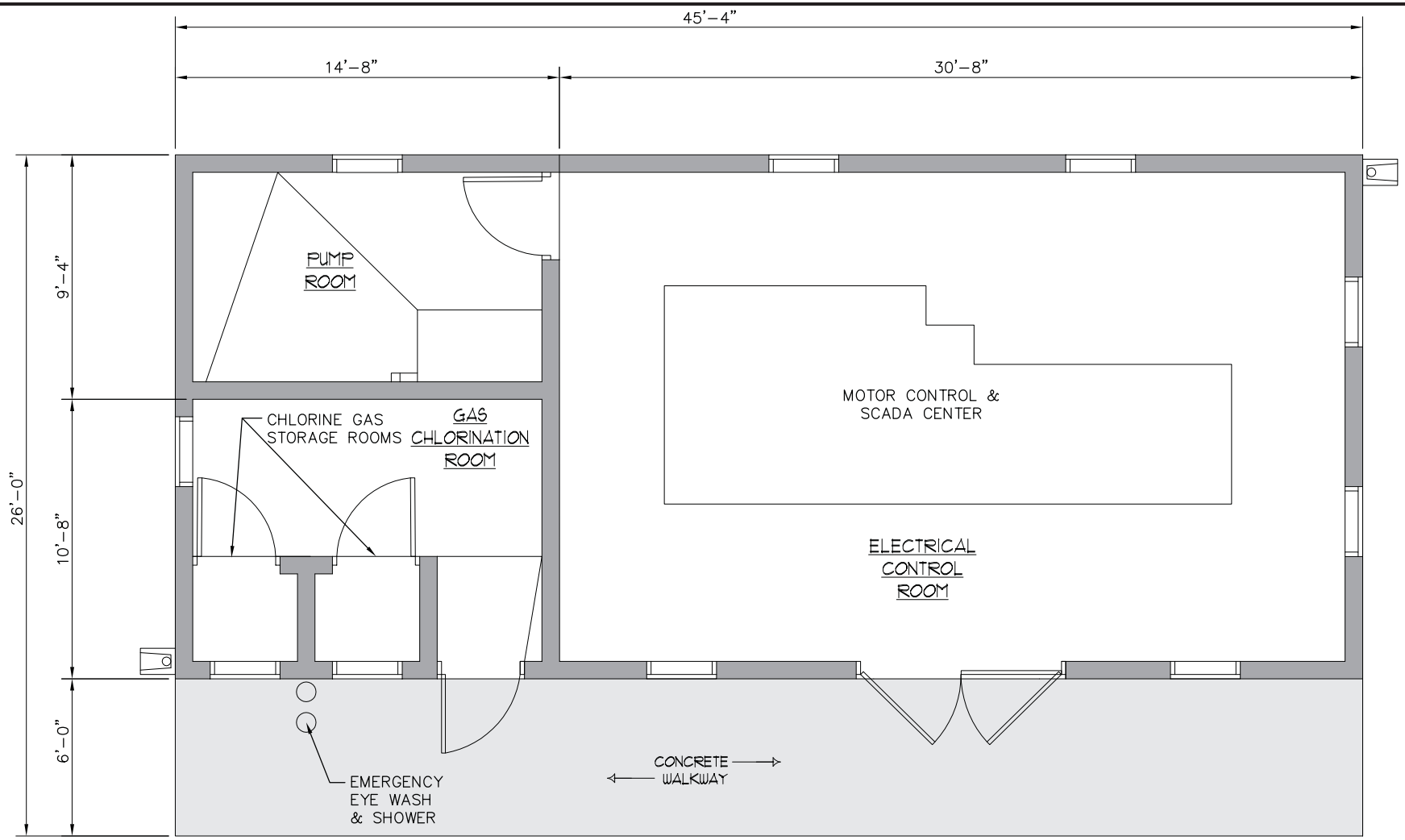

Figure 2.6:
Control Building Plan View

Prepared For:
Dept. of Water Supply, County of Hawai`i

Prepared By:
PLANNING SOLUTIONS

Source:
TNWRE
Job No. 08-46, Sheet 7/7

Project:
Kapulena Well & Reservoir

Figure 2-6 Control Building Plan View 2009-03-02.cdr

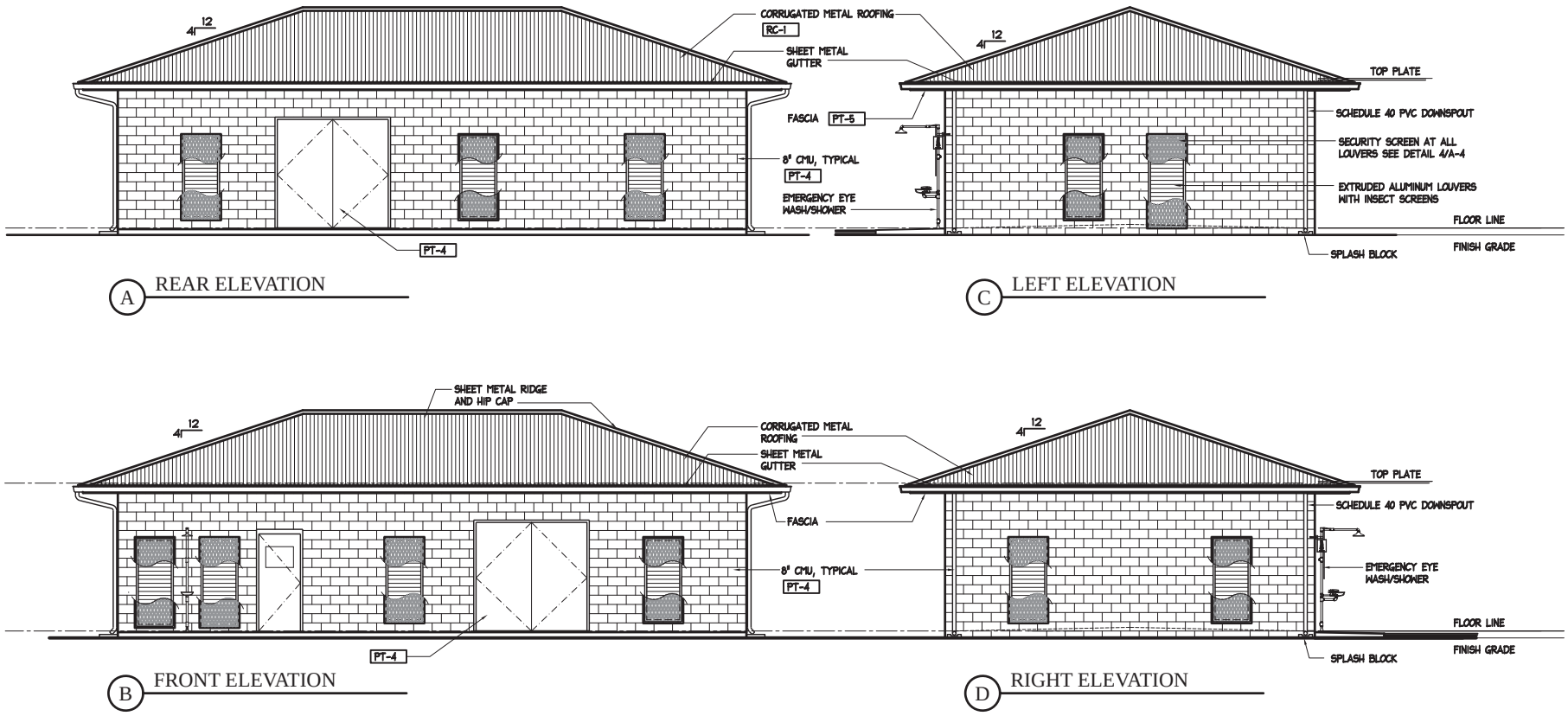

Figure 2.7:
Conceptual Control Building Elevation View

Note: This design should be considered conceptual in nature and is subject to change.

Prepared For:
Dept. of Water Supply, County of Hawai`i

Prepared By:
PLANNING SOLUTIONS

Source:
TNWRE
Job No. 2006-899, Sheet A-2

Project:
Kapulena Well & Reservoir

Figure 2-7 Control Building Elevations 2009-03-04.cdr

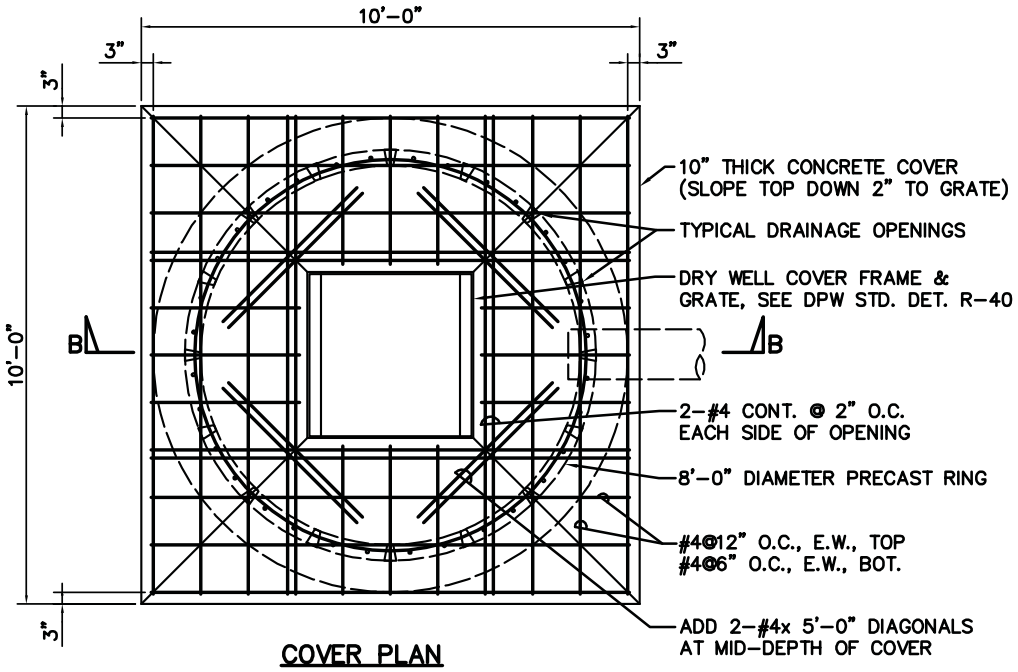

COVER PLAN

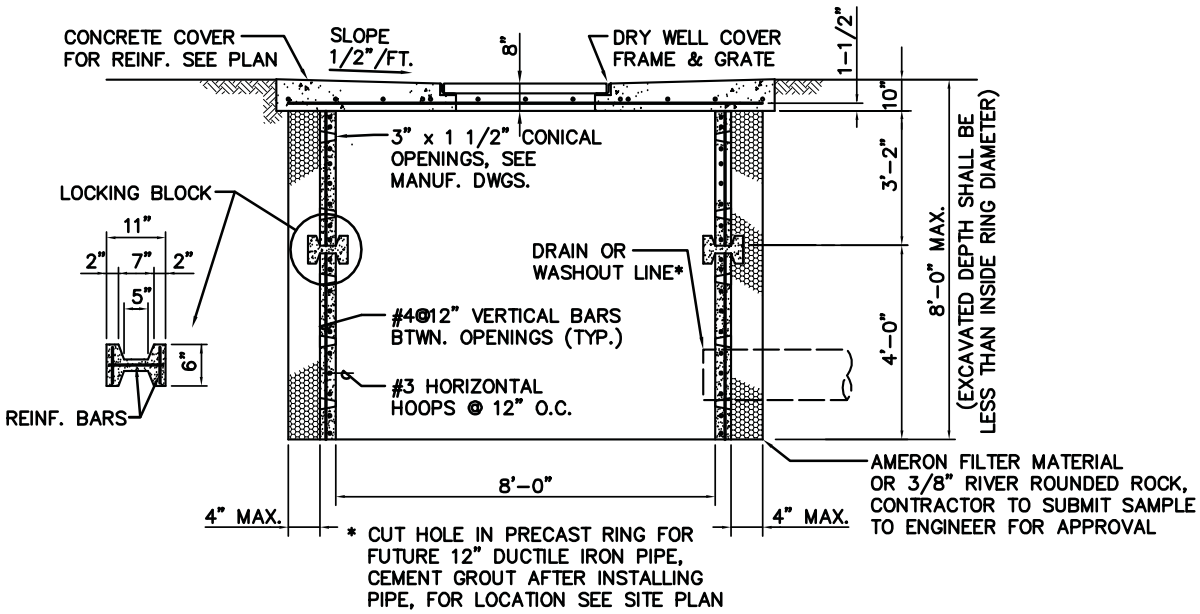

SECTION "B-B" CYLINDER REINFORCING & DRAINAGE DETAILS

NOTE: 28 DAY COMPRESSIVE CONCRETE STRENGTH = 4000 PSI

Prepared For:

Dept. of Water Supply,
County of Hawai`i

Prepared By:

PLANNING SOLUTIONS

Sources:

TNWRE
Job No. 08-46, Sheet 6/7

Note: Drawing is not to scale.

Figure 2.8:

Seepage Pit Detail

Kapulena Well & Reservoir

Figure 2-8 Seepage Pit Detail 2009-03-04.cdr

2.1.3 CONSTRUCTION SCHEDULE

Construction of the project will occur in phases. The initial phase consists of well drilling, casing, and pump testing. The second phase consists of the pump outfitting, and construction of the 0.30 MG reservoir and related support faculties. Phase 2 will be undertaken based on availability of funds.

Table 2.1 Preliminary Project Schedule

Task	*Approximate Duration*	*Estimated Completion Date*
PHASE I: Exploration Well		
Final Design	1 month	April 1, 2009
Design Review	2 months	June 1, 2009
Bid Solicitation	2 months	August 1, 2009
Bid Evaluation, Contracting, Notice-to-Proceed	1 month	September 1, 2009
Well Construction and Testing	9 months	June 1, 2010
PHASE II: Production Well & Reservoir		
Final Well Outfitting and Reservoir Design	12 months	June 1, 2011
Design Review and Approval	3 months	September 1, 2011
Bid Solicitation	2 months	November 1, 2011
Bid Evaluation, Contracting, Notice-to-Proceed	1 month	December 1, 2011
Construction Period	12 months	December 1, 2012
Source: Tom Nance Water Resource Engineering		

2.1.4 PROJECT COST

Table 2.2 presents preliminary estimates of the complete project costs. The project will be funded by the Department of Water Supply, County of Hawai‘i. The first phase, consisting of the well’s development and pump testing, has been authorized and identified as DWS Job No. 2007-071, Kapulena Well Development, Phase 1. It may also be funded by Federal funds through the State of Hawai‘i’s Drinking Water State Revolving Fund (DWSRF) program, which would constitute a Federal action and would require the project to meet all of the Hawai‘i DWSRF program requirements (see Section 4.1.4 for further information).

2.2 FRAMEWORK FOR CONSIDERATION OF ALTERNATIVES

Title 11, Chapter 200 of the Hawai‘i Administrative Rules (HAR §11-200) contains the Department of Health’s Environmental Impact Statement Rules. HAR §11-200-5 deals with “agency actions” such as the one that DWS is proposing. It requires that, for all agency actions that are not exempt as defined in HAR §11-200-8, the agency must consider environmental factors and available alternatives and disclose these in an environmental assessment or environmental impact statement. HAR §11-200-9 requires the proposing agency to analyze alternatives, in addition to the proposed action in the environmental assessment. HAR §11-200-10 establishes the required contents of environmental assessments. Among the requirements listed, HAR §11-200-10 (6) calls for an identification and summary of impacts <u>and alternatives considered</u> (emphasis added).

Table 2.2 Preliminary Project Cost Estimate

Item	*Estimated Cost*
Well Drilling, Casing, and Pump Testing	$1,226,500
Pump Outfitting, Control Building, and HELCO Charges	$1,320,000
0.3 MG Reservoir and Well Site Work	$2,008,000
Offsite SCADA Improvements	$30,000
Total Cost	**$4,584,500**
Source: Tom Nance Water Resource Engineering	

In accordance with these requirements, DWS considered a number of alternatives before determining that the proposed project is the best course of action. These included "No Action", enhanced water conservation, reduced scale action, alternate locations, and delayed action. DWS concluded that only two of these alternatives, merit consideration in the impact analysis portion of this Draft EA. They are "No Action" (as required by Chapter 343), and the proposed action of constructing the Kapulena Well and Reservoir as currently designed. The following two subsections describe the alternatives considered in preparation of this Draft EA and the criteria DWS used to decide whether to include them in the impact analysis presented in Chapter 4.

2.3 ALTERNATIVES ADDRESSED IN DETAIL IN EA

2.3.1 PROPOSED ACTION: CONSTRUCTING WELL & 0.30 MG RESERVOIR AT KAPULENA

This alternative consists of the proposed action as described in detail in Section 2.1 above. DWS believes constructing the facility at the proposed site would best enable it to continue to provide adequate, reliable, and affordable drinking water to its Kukuihaele Water System, and thus it represents their preferred course of action.

2.3.2 NO ACTION ALTERNATIVE

The "No Action" Alternative consists of not constructing an additional, 0.3 MG reservoir and well at the Kapulena site. This would be inconsistent with the approved DWS' *Water Master Plan*. Further, it would leave the Kukuihaele Water System without a primary source of high-quality groundwater, forcing the system to continue to depend on water that is hauled in by trucks from another well. Hence, "No Action" is not a viable alternative. It is evaluated in the Draft EA solely to fulfill the requirements of HRS Chapter 343, HAR 11-200, and NEPA.

2.4 ALTERNATIVES ELIMINATED FROM DETAILED ANALYSIS

2.4.1 REDUCED SCALE ALTERNATIVES

2.4.1.1 Omit 0.3 MG Reservoir

This alternative would involve construction and operation of the proposed new well and related facilities without adding the new proposed 0.30 MG reservoir. As discussed above, this would not alleviate the projected water storage shortfall in the Kukuihaele Water System, leaving the system without adequate water supply. This alternative would not meet the objectives of the proposed action and thus was not considered in detail.

2.4.1.2 Omit Well

This alternative involves constructing the 0.3 MG reservoir as proposed while foregoing the installation of a well. This would leave the system dependent on water that is trucked in from another well. Unless the water that the proposed well is replaced with water from a new well or other source constructed elsewhere, it would also leave the system with a supply capacity shortfall unless treatment facilities were installed that permitted use of the spring.

Since the Kukuihaele (Wai‘ulili) Spring is considered groundwater under the influence of surface water, using this source would require enhanced treatment to qualify as a potable water supply. The capital and operating costs of such enhanced treatment would be prohibitively high for a small system such as that serving Kukuihaele.

2.4.2 ENHANCED WATER CONSERVATION ALTERNATIVE

Enhanced water conservation within the system would not meet all of the project’s objectives. It would not, for example, eliminate the need to truck water to the existing reservoir site to replace water that can no longer be supplied to the existing tank from pipelines from the abandoned Kukuihaele (Wai‘ulili) Spring. Secondly, unless water use in the system was reduced by more than is typically accomplished through enhanced water conservation needs, it would not eliminate the need for additional water storage capacity within the system. Consequently, conservation alone would not allow the DWS to provide its customers in the Kukuihaele area with an adequate supply of affordable and high-quality potable water.

2.4.3 ALTERNATE LOCATIONS

Because of the high groundwater flux through the area, it is likely that wells drilled in other locations would also be productive. While DWS could probably develop a production well elsewhere in the service area, the proposed site has several characteristics that make it unlikely that a different location would be superior from an economic, environmental, or operational viewpoint. These include:

- Constructing the well and reservoir adjacent to the existing 0.05 MG reservoir avoids costly and unnecessary duplication of facilities. The connection between the reservoirs will allow for redundancy and reliability especially in the event one reservoir becomes temporarily disabled.
- The proposed well site’s proximity to the existing water transmission and distribution system avoids the need for substantial new water line construction.

A detailed analysis of potential environmental impacts from development of alternative water sources was beyond the scope of this assessment. However, in view of the absence of adverse effects documented above and in Chapter 3, it seems unlikely that other well locations might be better from an environmental standpoint.

2.4.4 DELAYED ACTION

For reasons documented above and in the Department’s *20-Year Water Master Plan*, it is undesirable to delay development of the proposed project. There are no existing activities or conditions at the site or in the project area that would make delaying the project desirable or that would reduce the impacts associated with it appreciably if delayed. DWS wants to act quickly to ensure that it maintains adequate storage and a safe drinking water supply for its customers in Kukuihaele. Therefore, it does not consider delayed action a viable alternative.

THIS PAGE INTENTIONALLY LEFT BLANK

3.0 EXISTING ENVIRONMENT & PROBABLE IMPACTS

3.1 TOPOGRAPHY, GEOLOGY, AND SOILS

3.1.1 EXISTING CONDITIONS

The Kukuihaele area is on the lower slope of the northeastern flank of Mauna Kea. Most of the surface area is composed of Pāhala ash, which is a commonly occurring geological formation in many parts of the island. The Pāhala ash consists of finely divided vitric (glassy) lava believed to have been formed as a byproduct of wind blowing on aerial lava fountains from volcanic eruptions of Mauna Kea. Along the Hāmākua coast, the ash is much altered to a mixture of clay minerals and aluminum and iron oxides. It is also characterized by young stream valleys that have cut narrow V-shaped notches into the land surface (Macdonald, Abbott, and Peterson 1983).

The soil at the site is the erosional byproduct of the original Pāhala ash. The U.S. Soil Conservation Service classifies it as Kūkaʻiau silty clay loam, 12 to 20 percent slopes. The surface layer is of very dark grayish-brown silty clay loam and in most areas approximately 10 inches thick. The subsoil is dark-brown silty clay loam generally about 40 inches thick. It is underlain by basalt. The surface layer is extremely acidic and the subsoil is medium to slightly acidic. This soil dehydrates irreversibly into aggregates the size of fine sand (USDA-NRCS 2008). Kūkaʻiau silty clay loam is well-suited to agricultural use, and the Agricultural Lands of Importance to the State of Hawaiʻi has classified the general area as prime agricultural soil (State of Hawaiʻi 2002b). However, the steep slopes and high concentrations of rocks at the project site make it less than ideal for many crops. No commercially useful minerals are present.

The Kapulena site contains a macadamia nut orchard and a single-family residence. The parcel slopes consistently down to the north from an elevation of about 1,240 feet to about 900 feet at the intersection of the access driveway and Honokaʻa-Waipiʻo Road. The average slope across the entire parcel is 15 percent. The average slope across the project site, located in the bottom half of the parcel, is between 18 to 20 percent.

3.1.2 PROBABLE IMPACTS

The grading for the 0.3 MG reservoir, well, control building, and access road extension will disturb 0.63 acres. The grading will also require excavation of approximately 885 cubic yards of material and an embankment of approximately 720 cubic yards. In addition, the contractor will place gravel over the portion of the parcel not used for structures or pavement. These localized modifications will affect the ground contours on the site itself but will not substantially change the overall topography of the surrounding area.

As noted above, Kūkaʻiau silty clay loam is classified as prime agricultural soil even though the land is steep and rocky. The project will remove a few macadamia nut trees to accommodate the construction of the well and reservoir. It will not substantially affect continued agricultural use of the remainder of the parcel.

3.2 HYDROLOGY

3.2.1 EXISTING CONDITIONS

3.2.1.1 Surface Water

In absolute distance, the closest surface water to the project site is the Kawaikalia Stream, which is about 370 feet to the east of the closest point on the project site. However, because of the

topography, storm water runoff from the project site will flow away from this stream. A portion of the site runoff will discharge via sheet flow into the Lower Hāmākua Ditch, which flows under the existing access driveway and is about 500 feet from the area to be graded (see Figure 3.1).[1] The remainder will intersect the Honokaʻa-Waipiʻo Road and flow to the north along the adjacent swale.

3.2.1.2 Groundwater

The proposed Kapulena well would draw water from the Honokaʻa Aquifer System as defined by the State Commission on Water Resource Management (CWRM 1995), which extends from Kukuihaele on the northwest to Pāʻauhau on the southeast, a distance of about 9 miles (see Figure 3.2). CWRM estimates that the sustainable yield of the Honokaʻa Aquifer System is 31 million gallons per day (MGD). Table 3.1 provides information on the two wells in the System. As shown in the table, the total pump capacity of the wells for which there are available data is about 1.3 MGD.

3.2.2 PROBABLE IMPACTS

3.2.2.1 Construction Phase

As noted above, the Kawaikalia Stream is about 370 feet away from the site, but does not receive any runoff from the site. Some runoff from the site into the Lower Hāmākua Ditch is possible, though it is more than 300 feet from the area that will be graded. The contractor will use best management practices (BMPs) necessary during construction to prevent contaminants such as sediment, petroleum products, and debris from leaving the site via storm water runoff. It will attempt to schedule work for periods of minimal rainfall, and will place permanent erosion control measures on lands denuded of vegetation as quickly as possible. Since the disturbed area is expected to be less than an acre, NPDES Construction Storm Water General Permit coverage is not required.[2]

During the testing phase and well construction of the project, a temporary diesel engine-powered pump will be used to develop the proposed well (i.e., to remove sediment and well cuttings that are a by-product of the drilling) and to determine its hydraulic capacity. The contractor will direct the discharges from pump testing into the new seepage pit. The distance of the disturbed site from the Lower Hāmākua Ditch and the BMPs employed will ensure that the ditch is not substantially affected by the construction.

3.2.2.2 Operational Phase

3.2.2.2.1 Surface Water

The proposed well, reservoir, and associated structures would add approximately 6,000 square feet of impermeable surface to the site. A concrete swale and drainage system would be installed to collect runoff from paved areas and divert it through underground drain lines into the seepage pit. Similarly, the 5-minute pump start-up flows of well water (approximately 500 to 1,000 gallons of water into the seepage pit each time it is started) would be directed to the seepage pit. The design engineers for the project have opened discussions with the State Department of Agriculture to determine whether or not these start-up flows could be discharged into the Lower Hāmākua Ditch, since the only contaminants in this water will be a small amount of suspended sediments and these flows could make a small augmentation of the ditch flow. Should the Department of Agriculture decide that this would be a benefit to the ditch, then the start-up flows may be piped directly to the ditch.

Because of the permeable nature of the area that will remain and the fact that the on-site drainage system is designed to accommodate runoff from a 10-year storm, this will only increase the volume of surface runoff leaving the site under extremely heavy rainfall conditions. As mentioned above, no runoff would directly enter the Kawaikalia or Malanahae Stream. Much of the runoff that is not

[1] The Lower Hāmākua Ditch is an important source of irrigation water in the Hāmākua District, currently providing, at its source above Waipiʻo Valley, a flow of 8.9 million gallons per day (Yoshimori 2009).

[2] National Pollutant Discharge Elimination System administered through the Clean Water Branch of the State Department of Health (Hawaiʻi Administrative Rules, 11-55, Appendix C)

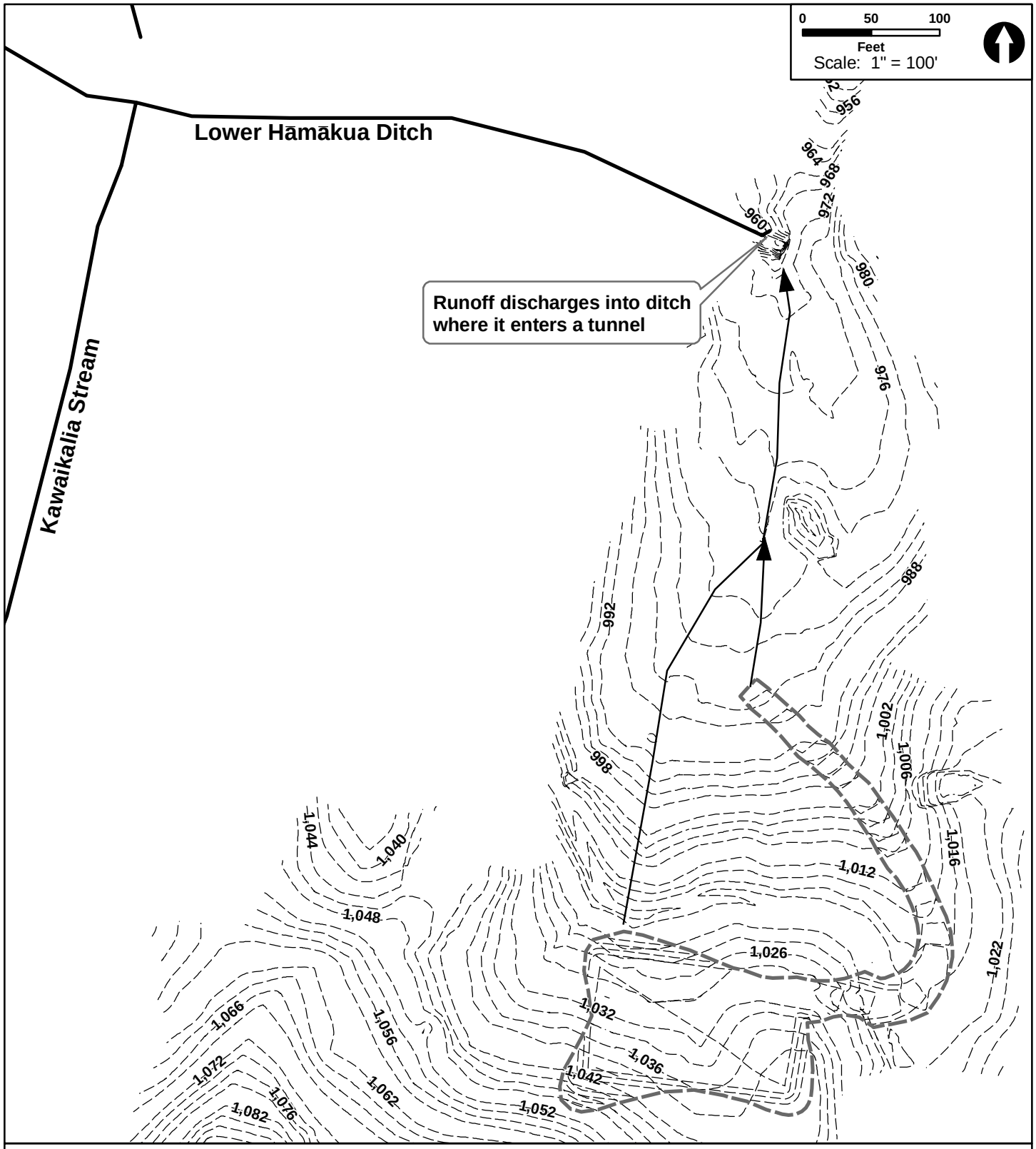

Prepared For:
Tom Nance Water Resource Engineering (TNWRE)

Prepared By:
PLANNING SOLUTIONS

Sources:
-State of Hawaii GIS
-TNWRE

Legend:

Limits of Grading

Contour Interval: 2'

Figure 3.1:

Storm Water Runoff From Project Site

Kapulena Well & Reservoir

Figure 3-1 Stormwater Runoff From Project Site 2009-04-10.mxd

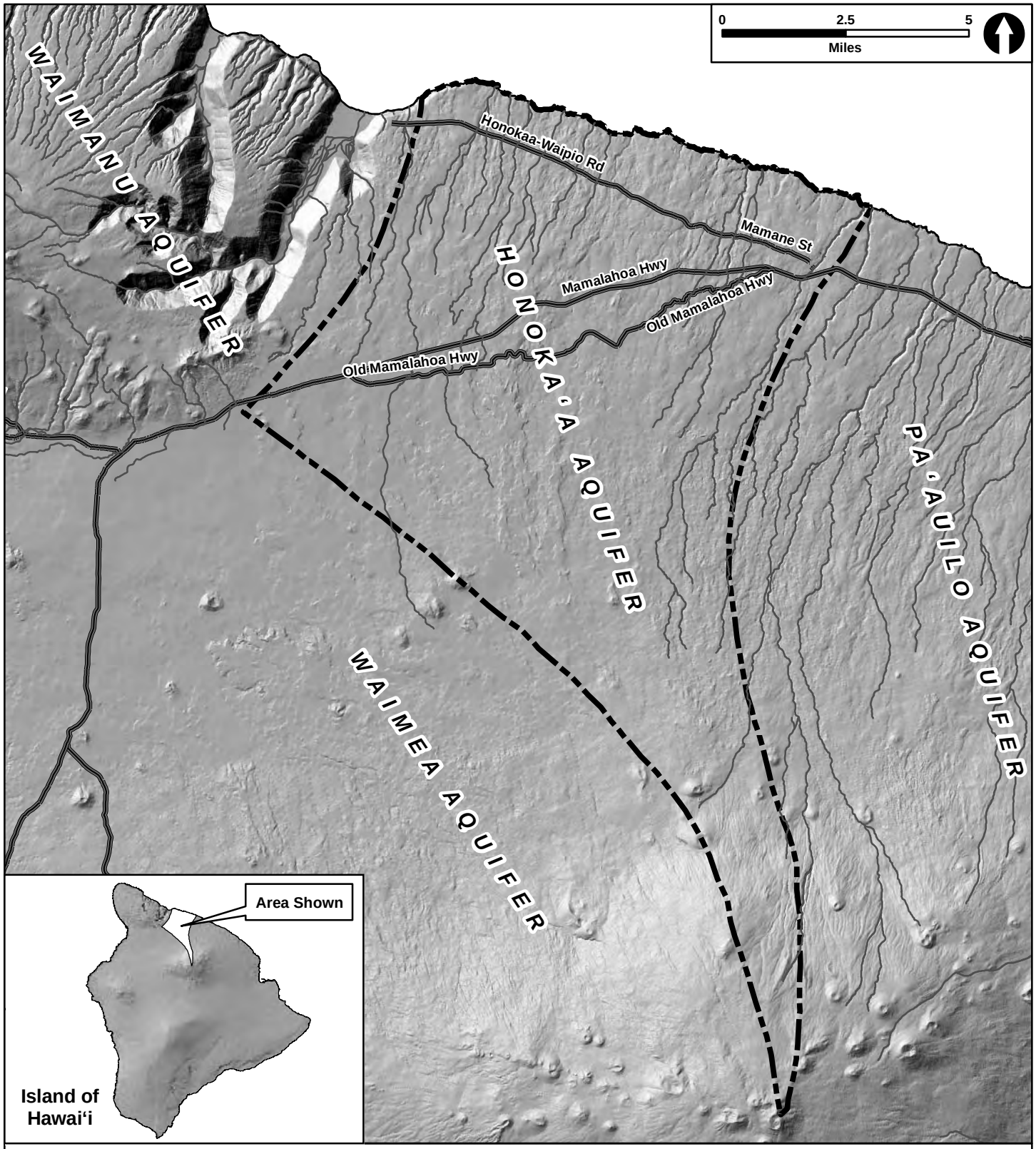

Prepared For:

TNWRE

Prepared By:

PLANNING SOLUTIONS

Source:

-State of Hawaii GIS
-Dept. of Land & Natural Resources GIS

Legend:

Perennial Streams

Highways

Honokaa Aquifer Boundaries

Figure 3.2:

Honoka'a Aquifer

Kapulena Well & Reservoir

Figure 3-2 Honokaa Aquifer 2009-03-20.mxd

immediately absorbed into the ground would be from paved or graveled surfaces that would contribute little or no suspended sediment. There will be very low levels of traffic or other activity that could add oil, grease, or other common roadway pollutants to the site. Hence, while the quantity of runoff from the proposed additions will be slightly greater than at present, the quality will not significantly change.

3.2.2.2.2 Groundwater

As noted above, CWRM estimates that the sustainable yield of the Honokaʻa Aquifer System is 31 million gallons per day (MGD), while the total pump capacity of the wells for which there are available data is only 1.3 MGD. This project will result in maximum addition of 0.3 MGD, which will leave total withdrawals over 29 MGD below the Aquifer System's sustainable yield.

Table 3.1 Drilled Wells in the Honokaʻa Aquifer System.

State Well No.	*Year Developed*	*Approx. Distance From Site (miles)[2]*	*Current Use*	*Pump Capacity (MGD)[1]*	*Ground Elevation (ft MSL)[2]*	*Well Depth (ft)*
6235-01	1991	6.0	Irrigation	0.72	2,814	1,415
6528-01	1979	3.7	Municipal	0.612	855	909

Notes:
[1] Data from State GIS (State of Hawaii 2002)
[2] Elevations in feet above mean sea level

Source: CWRM Groundwater Index, compiled by Planning Solutions

3.3 POTENTIAL FOR WELL CONTAMINATION

For reasons outlined below, there is a low probability that the groundwater that the proposed well would tap is, or would become, contaminated:

- No chemical contaminants have been detected in active wells of the Honokaʻa Aquifer System within the last four years. Prior to that time, several contaminants (mostly associated with sugarcane production) had been detected (see Table 3.2). However, the concentrations present were a fraction of the State and federally defined allowable levels for potable water sources (DOH 2005).
- According to the County of Hawaiʻi Department of Environmental Management, Solid Waste Division, the nearest landfill to the project site is on the opposite side of the island in Puʻuanahulu, about 27 miles away. The nearest transfer station is in Honokaʻa, about 4 miles away and far down-gradient from the proposed well site.
- The area surrounding the well site is entirely surrounded by agricultural land. The nearest wastewater source is a cesspool at a single-family home about 400 feet down-gradient from the well site at an elevation of about 820 feet msl.
- As described above in Section 2.1.1, in the upper 833 feet of the well, the space outside of the solid casing will be filled with grout, further isolating it from surface water inputs. This, together with the absence of up-gradient sources of pollution and the distance to the nearest down-gradient source (a single cesspool) make it very unlikely that the well could be contaminated by existing sources.
- Based on State Department of Health Office of Hazard Evaluation and Emergency Response records (DOH 2008), no identified site of concern to the State Department of Health is located

within the proposed well site area. The nearest listed site is the State of Hawai‘i Department of Health facility in Honoka‘a, approximately 4 miles from the site. This site, a small medical facility, has been archived by the EPA (Reference No. HID066259938). It does not present any health risks to the surrounding environment. Thus, given its distance from the well site and its designation by the EPA, it poses no potential for contamination of the well.

- The proposed well site does not contain any hazardous materials, and none, except for the petroleum products used by the construction equipment, will be used or generated during construction.

Table 3.2 Measured Contamination in Active Wells of the Honoka‘a Aquifer System

State Well No.	*Contaminant*	*Detected Level (ppb)*	*Maximum Contaminant Level (MCL) (ppb)*[4]	*Detected Level as % of MCL*	*Date Sampled*
6528-01	Atrazine[1,2]	0.21	3	7%	11/15/05
6528-01	Desethyl Atrazine	0.60	3	20%	12/8/03
6528-01	Hexazinone[3]	0.15	2,000	.0075%	12/8/03

Notes:
[1]Atrazine is an herbicide used on row crops.
[2] The value given here is the sum of separate determinations for the herbicide atrazine and for desethyl atrazine (a metabolite of atrazine) which have similar toxic effects (EPA 2002).
[3]Hexazinone is a pesticide.
[4]There are no State of Hawai‘i Standards in place; the levels shown are from the U.S. EPA Drinking Water Standards (EPA 2008).

Source: State Department of Health (DOH 2005)

3.4 CLIMATE AND AIR QUALITY

3.4.1 EXISTING CONDITIONS

The rain gauging station at Kukuihaele, located an elevation of 980 feet above sea level about 3.9 miles west-northwest of the project site, provides the best indication of conditions at the Kapulena Well and Reservoir site. The median annual precipitation between 1971 and 2000 was 88.6 inches (NOAA 2002). January was the wettest month of the year during this period, with an average rainfall of 10.5 inches; September was the driest month, averaging 3.8 inches. Rainfall varies significantly according to time of day as well as time of year, with the mid-day being generally much drier than the nighttime.

Temperatures at the project site are moderate. Between 1971 and 2000, the median annual temperature, measured at O‘ōkala (which is located at an elevation of 430 ft. and is about 17.5 miles from the site) the most comparable location from which temperature data are available) was 72.9˚ F. February had the lowest monthly average low temperature at that location (64.0˚), while September had the highest monthly average high temperature (81.6˚).

No site-specific wind data are available. However, information from other investigations strongly suggests that the wind pattern at the site reflects the influence that the island’s large land mass has on

the prevailing trade winds. Long-term wind records from Hilo International Airport (the closest regular wind monitoring station) and spot measurements made at selected locations along the Hāmākua Coast indicate a strong diurnal pattern to the winds at Kapulena. During the daytime, the winds normally blow out of the east with speeds averaging between 10 to 12 miles per hour. During the nighttime, the downslope movement of cool air opposes the trade winds and the wind direction is from the southwest.

There are no substantial sources of anthropogenic air emissions and very little chance for the development of air inversions on the mountain slope. Emissions from the currently active volcanic eruptions from Kilauea Volcano are usually carried to the southwest around the island and are not likely to affect the project site. Consequently, air quality is generally excellent.

3.4.2 PROBABLE IMPACTS

3.4.2.1 Construction Phase

As mentioned, grading and excavation of the proposed well site will disturb less than one acre of land. No more than a few pieces of construction equipment would operate on the site at any one time. Moreover, work would be limited to period of a several months. The site's relatively high rainfall, generally moderate wind speeds, and distance from sensitive receptors means that fugitive dust is unlikely to be a problem during construction. The contractor will ensure that the work conforms with the State Department of Health's guidelines for controlling fugitive dust as outlined in Hawai‘i Administrative Rules §11-60.1. Consequently, pollutant emissions from construction equipment do not have the potential to affect the local or regional air quality substantially.

3.4.2.2 Operational Phase

Normal operation of the proposed facilities will not produce on-site air emissions, will not alter airflow in the vicinity, and will have no other measurable effect on the area's microclimate. In any event, forecast electrical power use by the proposed facilities represents such a small portion of total electrical power use on the island that its operation would have no discernible effect on power plant emissions.

3.5 TERRESTRIAL FLORA AND FAUNA

3.5.1 EXISTING CONDITIONS

The project site has been a macadamia nut (*Macadamia integrifolia, M. tetraphylla*, and other *Macademia sp.)* orchard for several decades (see photos in Figure 2.1). The understory vegetation includes California grass (*Brachiaria mutica*), albizia (*Albizia chinensis*), *Mimosa pudica*, and other weeds. No faunal survey was conducted, but the disturbed nature of the habitat and anecdotal information strongly suggests that it is limited to introduced birds and mammals. No rare or endangered species are known or expected to be present.

3.5.2 PROBABLE IMPACTS

Construction of the proposed facilities will affect less than an acre of land. The land is a cultivated orchard that is managed for commercial production and currently supports introduced and invasive species. It does not contain suitable habitat for any rare or endangered species. Consequently, the proposed action will not have any substantial direct impacts on terrestrial flora or fauna.

3.6 NOISE

3.6.1 EXISTING CONDITIONS

Passing trucks, motorcycles, and cars on the Honokaʻa-Waipiʻo Road are the most significant existing noise sources at the project site. Considering the distance from this road (~ 1,000 feet), the peak noise levels in the area, which are caused by wind in trees, by bird calls, and by distant vehicular traffic, are likely to be near 55 dBA. Average noise levels during periods of calm winds and no traffic are probably less than 45 dBA.

3.6.2 PROBABLE IMPACTS

3.6.2.1 Construction Phase

Noise from construction activities is likely to be audible above the 35-to-50 dB background levels at the homes closest to the project site. Construction of the well and reservoir on the site will involve the operation of diesel-powered drilling equipment for a period of up to 9 months (see Table 2.1 Construction Schedule).

Construction of the project will occur in phases. The initial phase consists of well drilling, casing, and pump testing. The second phase consists of the pump outfitting, and construction of the 0.30 MG reservoir and related support faculties. Phase 2 will be undertaken based on availability of funds.

Noise source levels from unmuffled equipment of this sort are as high as 80 to 85 dBA measured at a distance of 50 feet. This could result in sound levels of about 53 - 58 dBA at the property line of the nearest residence (which is about 400 feet northeast of the proposed well and reservoir). Noise levels on other, more distant properties would be even lower. With the exception of the well testing, construction activities will be limited to daytime hours. Well testing utilizes diesel-powered pumps and requires continuous (i.e., 24-hour-per-day) pumping for a period of at least five days. Consequently, noise from this activity necessarily extends through the night.

Hawaii Administrative Rules §11-46 (Community Noise Control) establishes noise limits for construction, agricultural, and industrial activities. The noise limit for "Class C Districts" [which §11-46-3(3) defines as *"...all areas equivalent to lands zoned agriculture, country, industrial, or similar type."*] is 70 dBA at any time. The noise limit for "Class A Districts" [which §11-46-3(3) defines as *"...all areas equivalent to lands zoned residential, conservation, preservation, public space, open space, or similar type.*] is 55 dBA during the day and 45 dBA at night (see Table 3.3). The limits are applicable at the property line. Based on the 400-foot distance to the dwelling closest to the well site, any of these activities that are conducted at night (which would occur during pump testing) are likely to exceed the 45 dBA limit. Because of this, a construction noise permit will likely be needed from the State Department of Health.

3.6.2.2 Operational Phase

The permanent submersible pump and motor will operate quietly, limiting aboveground noise to the hum of the transformer. The project would not result in a cumulative increase in noise levels at the site. Regardless, the operation of the well pump would only produce noise levels of about 35 to 42 dBA at the property line and noise would not be detectable from the nearest dwelling. The proposed reservoir likewise will not constitute a noise source.

Table 3.3 Maximum Permissible Sounds Levels in dBA (HAR §11-46).

Zoning Districts	*Daytime (7 a.m. to 10 p.m.)*	*Nighttime (10 p.m. to 7a.m.)*
Class A	55	45
Class B	60	50
Class C	70	70

Notes:

(a) The maximum permissible sound levels apply to any excessive noise source emanating within the specified zoning district, and at any point at or beyond (past) the property line.

(b) Noise levels may not exceed the maximum permissible sound levels for more than ten per cent of the time within any twenty minute period, except by permit or variance issued under sections 11-46-7 and 11-46-8.

(c) For mixed zoning districts, the primary land use designation shall be used to determine the applicable zoning district class and the maximum permissible sound level.

(d) Measurements values are for "A" weighting network and "slow" meter response unless otherwise stated. Sound level meters and calibrators must conform to American National Standard, ANSI S1.4-1983, specifications. The maximum permissible sound level for impulsive noise is ten dBA above the maximum permissible sound levels shown and is measured using the "Fast" meter response.

(e) The limits do not apply to the operation of emergency generators, provided the best available control technology is implemented.

(f) For the purpose of the regulations, the following definitions apply:

"*Construction activities*" means any or all activities, including but not limited to those activities necessary or incidental to the erection, demolition, assembling, renovating, installing, or equipping of buildings, public or private highways, roadways, premises, and parks.

"*Construction equipment*" means any device designed and intended for use in construction, including but not limited to any air compressor, pile driver, bulldozer, pneumatic hammer, steam shovel, derrick, crane, tractor, grader, loader, power saw, pump, pneumatic drill, compactor, on-site vehicle, and power hand tool.

"*Construction site*" means any or all areas, necessary or incidental for the purpose of conducting construction activities.

(g) Class A zoning districts include all areas equivalent to lands zoned residential, conservation, preservation, public space, open space, or similar type.

Class B zoning districts include all areas equivalent to lands zoned for multi-family dwellings, apartment, business, commercial, hotel, resort, or similar type.

Class C zoning districts include all areas equivalent to lands zoned agriculture, country, industrial, or similar type.

Source: Hawaii Administrative Rules, Title 11, Chapter 46, Community Noise Control

3.7 AQUATIC RESOURCES

3.7.1 EXISTING CONDITIONS

As shown on Figure 1.1, the site is between two perennial streams. Kawaikalia Stream, to the west, is the closer of the two and is 370 feet away while, to the east, Malanahae Stream is 1,724 feet away. The Hamakua Ditch to the north is about 470 feet from the site. Neither stream is listed by the U.S. National Park Service (NPS 2009) in the Nationwide Rivers Inventory as a candidate for designation as Scenic Rivers. No wetlands are located near the project site.

3.7.2 PROBABLE IMPACTS

As discussed above, the withdrawal of water from the island's basal lens will not substantially alter the stream flow in the adjacent Kawaikalia and Malanahae Streams, as they do not receive substantial groundwater inflow from that aquifer. Neither will it introduce pollutants into the stream. Consequently, the proposed action will not have substantial direct or indirect effects on the aquatic communities in streams or nearshore waters.

3.8 ARCHAEOLOGICAL, HISTORIC AND CULTURAL FEATURES

3.8.1 EXISTING CONDITIONS

Historically, the first sugar mill was established in the Hāmākua District in 1878. Because of its rich soil and plentiful water supply, the district soon became the premiere location for growing sugar on the Island of Hawai'i (Hazlett et al. 2007). The current project area was part of the Hāmākua Sugar Plantation. According to the current landowner, the project area was never planted with sugarcane due to the ground being too rocky. Instead, the area was used as an experimental plot for growing macadamia nuts, which are still present today.

Information on the historic and archaeological features in the project area were obtained from a report of a field inspection of the project area that was carried out on January 16, 2009, by Rechtman Consulting, LLC (see Appendix A). The report confirmed that the entire surface of the project site has been previously grubbed and graded and that no surficial archaeological resources are visible. The report also noted that the extensive ground disturbance and the nature of the substrate make it very unlikely that subsurface remains are present.

The project area has evidently been extensively modified and developed during historic times, as indicated by (a) the existing modified condition, (b) the present vegetation cover, and (c) the negative findings of the field inspection which yielded no physical evidence of the presence of any potentially significant cultural resources either within or related to the project site. Furthermore, there is no indication of any kind that the project area has resources necessary to or currently being used by either Native Hawaiian cultural practitioners exercising traditional and customary access and use rights for any purposes or by individuals of any other cultural affiliation for any traditional cultural purposes.

3.8.2 PROBABLE IMPACTS

Based on the findings of the above-referenced archaeological and cultural findings, the State Historic Preservation Division (SHPD) has concluded that the project should have no effect on historic properties. A copy of the assessment and the SHPD determination letter is included in Appendix A. Should any artifact or burial site be encountered during construction, all activities will halt and SHPD will be notified. After consultation with this office and implementation of a monitoring program, construction activities will be completed.

As discussed above, the site has been used for decades for the cultivation of macadamia nuts. No traditional native Hawaiian cultural practices, beliefs, and/or properties of any kind are known to exist in the project area (see Appendix A). Consequently, no substantial impacts to these resources will result from the project.

3.9 NATURAL HAZARD DESIGNATIONS

3.9.1 EXISTING CONDITIONS

The proposed well site is in the region of the Big Island that the U.S. Geological Survey (1997b) has designated as Volcanic Lava Flow Hazard level 8 (as measured on a scale of 1 to 9, with 9 being the least hazardous). This rating means that none of the area has been covered by lava within the last 750 years and that only a few percent of the area has been covered by lava within the last 10,000 years.

Defining hazard zones for the effects of earthquakes is more difficult than for eruptions and has not been attempted in any great detail for the Island of Hawai‘i. For the most part, earthquakes on Hawai‘i are concentrated beneath Kīlauea and Mauna Loa, and particularly beneath the south flanks of both volcanoes and in the Ka‘ōiki region between them. The likelihood of a damaging earthquake on Kīlauea or Mauna Loa probably increases with long-lived activity of the rift zones, but its precise time and magnitude are impossible to predict.

Large earthquakes unrelated to volcanic activity also occur at irregular intervals on the Island. In 1973, a magnitude 6.2 earthquake located 25 miles beneath Honomū Village injured 11 people and caused $5.6 million worth of damage. Such earthquakes have no known recurrence interval and are difficult to predict (USGS 1997a).

For the purposes of structural design, the entire Island of Hawai‘i is classified as Zone 4 by the Uniform Building Code adopted by the County of Hawai‘i in 1999 (USGS 1994, 1997a). The proposed well site is not located within a designated Flood Hazard Safety Area nor within a Tsunami Evacuation area (State of Hawai‘i 2002a).

3.9.2 PROBABLE IMPACTS

As discussed above, the proposed facilities are not subject to significant hazards from volcanic flows, flooding, or tsunami. To accommodate the relatively high susceptibility to earthquake hazards present on the Island of Hawai‘i, all structures will be built to comply with the Uniform Building Codes for Earthquake Zone 4.

3.10 SCENIC AND AESTHETIC RESOURCES

3.10.1 EXISTING CONDITIONS

Honoka‘a-Waipi‘o Road, which fronts the proposed well and reservoir site, is occasionally used by tourists to access Waipi‘o Valley, a popular tourist destination. The site is not visible from the road. The new reservoir may be partially visible to the land owner whose residence is about 400 feet northeast of the proposed site.

3.10.2 PROBABLE IMPACTS

As noted above, the project site is alongside the Honoka‘a-Waipi‘o Road, which is occasionally used by visitors to Waipi‘o Valley. On the road between Honoka‘a and Waipi‘o Valley, the existing scenic views consist generally of roadside views of dense tropical forests with occasional distant views of the ocean.

The addition of the proposed well, 0.3 MG reservoir, and control building would not substantially change the visual character of the area or interfere with significant views across the site. As shown in

the photos in Figure 2.1, the proposed well and reservoir site will not be seen from the main road or by residences possibly with the exception of the landowner.

3.11 TRAFFIC

3.11.1 EXISTING CONDITIONS

Access to the proposed well site will be via the Honokaʻa-Waipiʻo Road. The road is approximately 8 miles long, extending from Lehua Street in Honokaʻa on the east to Kukuihaele Road at the west. The bulk of the traffic along the road consists of passenger vehicles driven by residents and cars driven by occasional tourists visiting Waipiʻo Valley.

3.11.2 PROBABLE IMPACTS

Adequate space exists on the existing access driveway to allow construction vehicles to park without interfering with the active traffic lanes. The only possible exceptions to this are brief intervals when large construction equipment and material for the reservoir and other structures are moved onto and off the site and during paving of the access driveway entrance. The latter would require temporary closure of a single road lane over a period of one week or less. The contractor will provide appropriate signage and flaggers to direct traffic around the work area. Due to the low volume of traffic along the road, no major traffic delays or disruptions are expected to result from the project. The facility will not require manned operation, but only occasional monitoring and maintenance. Service vehicles will park in designated on-site areas and will not interfere with traffic. For these reasons, the construction and operation of the proposed site additions will not lead to substantial impacts on area roadways.

3.12 LAND USE, SOCIOECONOMIC AND CULTURAL ENVIRONMENT

3.12.1 EXISTING CONDITIONS

The parcel on which the proposed well and reservoir would be constructed is owned by Mr. Alan Suzuki (47-4633 Honokaʻa Waipiʻo Road, Honokaʻa, HI 96727). Presently, the site is used as a macadamia nut orchard and contains a single-family residence. The County of Hawaiʻi owns the parcel in which the existing 0.05 MG Kapulena Homestead Reservoir is located. Prior to that, it was an agricultural field that had formerly been under macadamia nut cultivation. The site is in the State Agriculture District. The County zoning is also Agriculture (Ag-40a). The proposed facilities are permitted uses in both these land use districts.

There are no existing commercial, industrial, or economic activities, other than agricultural and residential, in the vicinity. The proposed site is less than a mile *mauka* of the community of Kukuihaele. The nearest home is located on the property, about 400 feet northeast from the proposed well site.

The project site is located within year 2000 Census Tract 219, which includes the communities of Honokaʻa and Kukuihaele. The year 2000 population of this large census tract was less than 4,000 people, or about 2.6 percent of the island's population. Median household income was slightly higher than the county average, at $40,086 compared to $39,805. Unemployment within the civilian labor force was 6.6 percent, somewhat higher than the countywide average of 4.9 percent.

3.12.2 PROBABLE IMPACTS

The proposed well site additions are compatible with the existing use of this parcel and will complement the use of the existing reservoir. The addition of the well, reservoir, and control facilities to the site will not interfere with the use or affect the value of adjacent properties.

The proposed well and reservoir will increase DWS' total source and storage capacity in the Kukuihaele Water System. This will allow the Department to alleviate a projected storage deficit and will provide a high-quality source for the customers in the service area. Aside from the temporary construction employment and expenditures that it would create, the project will not in and of itself stimulate or otherwise promote population growth or economic activity.

THIS PAGE INTENTIONALLY LEFT BLANK

4.0 RELATIONSHIPS TO RELEVANT PLANS, POLICIES & CONTROLS

4.1 STATE AND COUNTY REGULATIONS

4.1.1 COUNTY OF HAWAIʻI GENERAL PLAN

4.1.1.1 Description of Plan

The Department of Water Supply operates and maintains over twenty separate systems in the County of Hawaiʻi, including the Kukuihaele Water System. The 2005 *Hawaiʻi County General Plan* contains goals and policies concerning the development and operation of essential water supply facilities. The *General Plan* recognizes that water supply facilities are needed to support the patterns of development which the *General Plan* seeks to achieve. It makes planning for the location of utility facilities such as wells, reservoirs, and pumping stations an integral part of the land planning process.

The *2005 General Plan* identifies the following County policies with regards to public water systems that are relevant to the proposed project:

(a) Water system improvements shall correlate with the County's desired land use development pattern.

(b) All water systems shall be designed and built to Department of Water Supply standards.

(c) Improve and replace inadequate systems.

(d) Water sources shall be adequately protected to prevent depletion and contamination from natural and man-made occurrences or events.

(e) Water system improvements should be first installed in areas that have established needs and characteristics, such as occupied dwellings, agricultural operations and other uses, or in areas adjacent to them if there is need for urban expansion.

(f) A coordinated effort by County, State and private interests shall be developed to identify sources of additional water supply and be implemented to ensure the development of sufficient quantities of water for existing and future needs of high growth areas and agricultural production.

(g) The fire prevention systems shall be coordinated with water distribution systems in order to ensure water supplies for fire protection purposes.

(j) Cooperate with appropriate State and Federal agencies and the private sector to develop, improve and expand agricultural water systems in appropriate areas on the island.

(k) Promote the use of ground water sources to meet State Department of Health water quality standards.

(m) Seek State and Federal funds to assist in financing projects to bring the County into compliance with the Safe Drinking Water Act.

(n) Develop and adopt a water master plan that will consider water yield, present and future demand, alternative sources of water, guidelines and policies for the issuing of water commitments.

(o) Expand programs to provide for agricultural irrigation water.

The *2005 Hawaiʻi County General Plan* identifies a number of actions to implement these policies in the Hāmākua District. Specifically, it directs DWS to:

(a) Continue to coordinate programs with State and Federal agencies to develop a well at Kukuihaele and Honoka'a Hospital to the standards of the Department of Water Supply.

(b) Replace old, sub-standard, or deteriorating lines and storage facilities.

(c) Investigate groundwater sources in the Honoka'a and Kukuihaele areas.

4.1.1.2 Conformance with the 2005 *Hawai'i County General Plan*

The proposed well and reservoir is being constructed by DWS in response to the *General Plan* policy for Hāmākua that encourages groundwater source investigation for this area of the island. By eliminating the system's dependency on the Kukuihaele (Wai'ulili) Spring, the proposed action is also responding to the *General Plan*'s policy of replacing existing surface sources with groundwater sources.

The proposed project meets all applicable design standards. It will allow DWS to continue to meet the needs of the people of Kukuihaele in a cost-effective manner while complying with the State Department of Health requirements for reliability and quality of potable water sources. The proposed well and ancillary facilities are located on a site that is already part of the DWS system. They are compatible with existing uses in the surrounding area and they are allowable under existing State and County zoning and development regulations. Operation of the well and reservoir would not produce substantial air or noise emissions that would disturb existing uses on adjacent properties.

4.1.2 COUNTY OF HAWAI'I ZONING ORDINANCE

The County zoning in the project area is Agriculture (Ag-40a). The Hawai'i County Code (2000 Edition), Section 25-4-11(b) states:

> *Any substation used by a public utility for the purpose of furnishing telephone, gas, electricity, water, radio, or television shall be a permitted use in any district provided that the use is not hazardous or dangerous to the surrounding area and the director has issued plan approval for such use.*

The proposed well and reservoir would be a public utility that would provide additional storage and a surface water source of potable water to the Kukuihaele community. Consequently, the project qualifies as a permitted use under this regulation. DWS will submit an *Application for Plan Approval* to the Hawai'i County Department of Planning to obtain the necessary director's approval for the project once the Chapter 343 process is completed.

4.1.3 STATE OF HAWAI'I LAND USE LAW

The site is in the State Agriculture District. HRS Chapter 205 §205-4.5 (7) lists public utility facilities such as those that are proposed as permissible uses within the State Agricultural District.

4.1.4 COMPLIANCE WITH THE STATE OF HAWAI'I'S DRINKING WATER STATE REVOLVING FUND (DWSRF) PROGRAM REQUIREMENTS

This project might be funded by Federal funds through the State of Hawai'i's Drinking Water State Revolving Fund (DWSRF) program. The U.S. Congress established the DWSRF program as a new section 1452 of the Safe Drinking Water Act (SDWA), 33 U.S.C. 300j-12, by the SDWA Amendments of 1996, Public Law 104-182. The DWSRF was established to help prevent contamination through source water protection and enhanced water system management. It also emphasizes the needs of small water systems, such as Kukuihaele. The proposed project is consistent with the overall program intent to prevent potential contamination and the program emphasis on small water systems. This document includes all of the environmental information required for compliance with the DWSRF program.

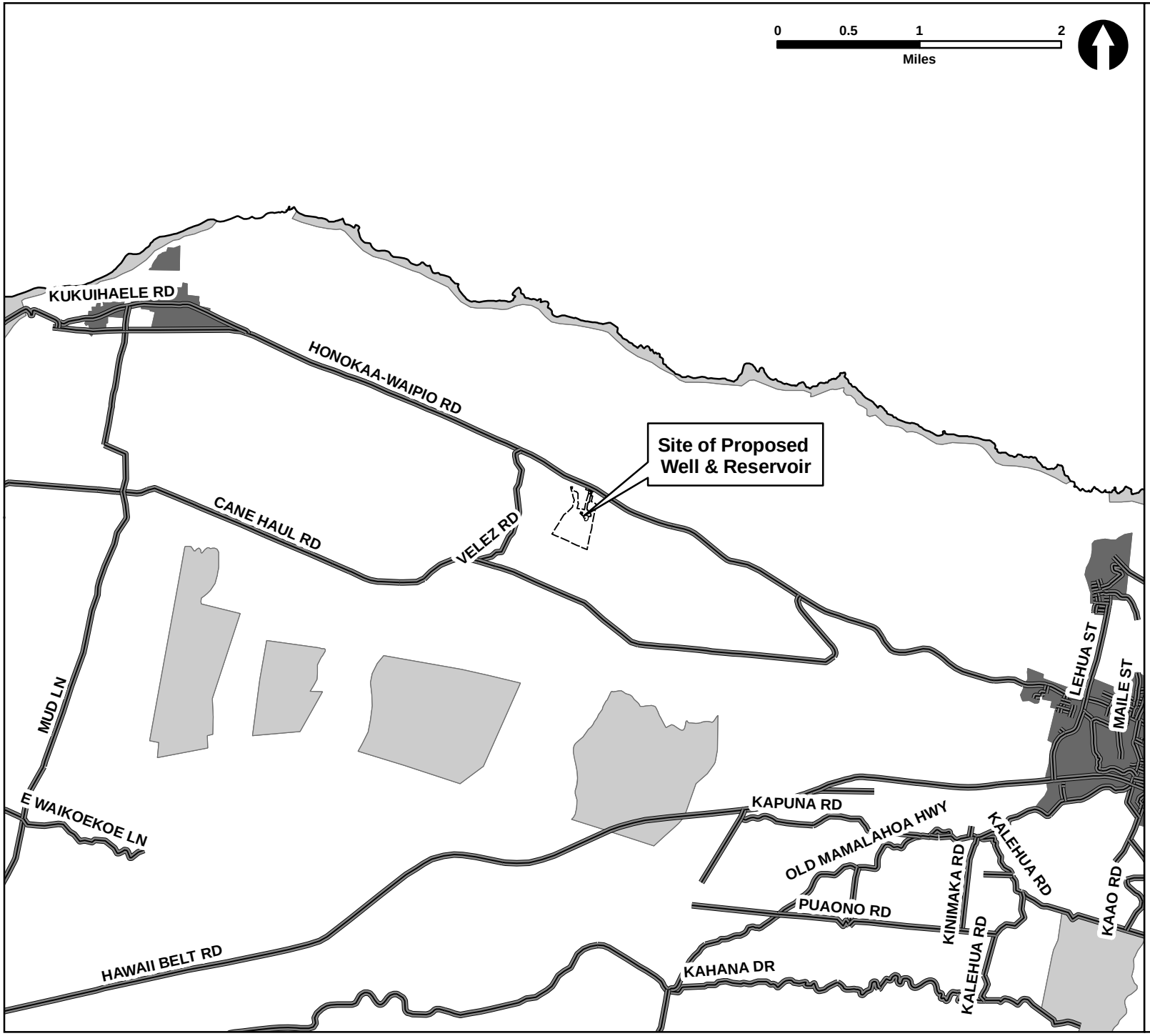

Legend:

Major Roadways

Kapulena Well Site TMK Boundaries

State Land Use Districts:

Agriculture

Conservation

Urban

Prepared For:

Dept. of Water Supply, County of Hawai`i

Prepared By:

PLANNING SOLUTIONS

Sources:

-TNWRE
-State of Hawaii GIS

Figure 4.1:

State Land Use Districts

Kapulena Well & Reservoir

Figure 4-1 State Land Use Districts.mxd

4.2 CROSS-CUTTING FEDERAL AUTHORITIES

The following sub-sections address the proposed project's relationship to other Federal "cross-cutting" environmental, economic, social, and miscellaneous federal authorities as required by the State of Hawai'i's Drinking Water State Revolving Fund (DWSRF) program.

4.2.1 ENVIRONMENTAL POLICY AUTHORITIES

4.2.1.1 Archeological and Historic Preservation Act (16 U.S.C. § 469a-1) and National Historic Preservation Act (16 U.S.C. § 470)

As discussed in Section 3.7, the project site is located in an area that has been used extensively for agriculture for many years and no known archaeological or historic features exist at the site. The State of Hawai'i Historic Preservation Division (SHPD) of the Department of Land and Natural Resources has determined that the project will have no effect on historic properties, and the impact assessment conducted for the project detected no evidence that the site is used or valued for cultural purposes. Consequently, the proposed action is in compliance with these regulations.

4.2.1.2 Clean Air Act (42 U.S.C. § 7401)

As discussed in Section 3.4, air quality at the site of the proposed project is good. The site is in an air quality attainment area as defined by the State of Hawai'i Department of Health in its EPA-approved Air Quality program. Only minor amounts of grading and excavation will be required for the project. This, along with the wet climate, means that fugitive dust will not be a problem during construction.

It is anticipated that diesel-powered construction equipment will be used to construct the proposed well and reservoir. Emissions from the diesel will slightly degrade air quality for the short period of time they are in operation. However, all applicable emission and ambient air quality standards will continue to be met. Normal operation of the proposed facilities will not produce on-site air emissions, will not alter air flow in the vicinity, and will have no other measurable effect on the area's micro-climate. Consequently, the proposed project complies with the provision of the Clean Air Act.

4.2.1.3 Coastal Barrier Resources Act (16 U.S.C. § 3501)

Coastal Barrier Resources Act (CBRA), Public Law 97-348 (96 Stat. 1653; 16 U.S.C. 3501 et seq.), enacted October 18, 1982, designated various undeveloped coastal barrier islands, depicted by specific maps, for inclusion in the Coastal Barrier Resources System (System). Areas so designated were made ineligible for direct or indirect Federal financial assistance that might support development, including flood insurance, except for emergency life-saving activities. This Act does not apply to the State of Hawai'i at this time, therefore the proposed project will not affect any areas protected by this Act.

4.2.1.4 Coastal Zone Management Act (16 U.S.C. § 1451)

Enacted as Chapter 205A, HRS, the Hawaii Coastal Zone Management (CZM) Program was promulgated in 1977 in response to the Federal Coastal Zone Management Act of 1972. The CZM area encompasses the entire state, including all marine waters seaward to the extent of the state's police power and management authority, including the 12-mile U.S. territorial sea and all archipelagic waters.

The Hawai'i Coastal Zone Management Program focuses on ten policy objectives:

- Recreational Resources. To provide coastal recreational opportunities accessible to the public and protect coastal resources uniquely suited for recreational activities that cannot be provided elsewhere.
- Historic Resources. To protect, preserve, and where desirable, restore those natural and manmade historic and prehistoric resources in the coastal zone management area that are significant in Hawaiian and American history and culture.

- Scenic and Open Space Resources. To protect, preserve, and where desirable, restore or improve the quality of coastal scenic and open space resources.
- Coastal Ecosystems. To protect valuable coastal ecosystems, including reefs, from disruption and to minimize adverse impacts on all coastal ecosystems.
- Economic Uses. To provide public or private facilities and improvements important to the state's economy in suitable locations; and ensure that coastal dependent development such as harbors and ports, energy facilities, and visitor facilities, are located, designed, and constructed to minimize adverse impacts in the coastal zone area.
- Coastal Hazards. To reduce hazard to life and property from tsunami, storm waves, stream flooding, erosion, subsidence, and pollution.
- Managing Development. To improve the development review process, communication, and public participation in the management of coastal resources and hazards.
- Public Participation. To stimulate public awareness, education, and participation in coastal management; and maintain a public advisory body to identify coastal management problems and provide policy advice and assistance to the CZM program.
- Beach Protection. To protect beaches for public use and recreation; locate new structures inland from the shoreline setback to conserve open space and to minimize loss of improvements due to erosion.
- Marine Resources. To implement the state's ocean resources management plan.

Other key areas of the CZM program include: a permit system to control development within a Special Management Area (SMA) managed by the Counties and the Office of Planning; a Shoreline Setback Area which serves as a buffer against coastal hazards and erosion, and protects view-planes; and the Marine and Coastal Affairs. Finally, a Federal Consistency provision requires that federal activities, permits and financial assistance be consistent with the Hawai‘i CZM program.

The proposed Kapulena Well and Reservoir project is located about a mile from the coastline. It does not involve the placement, erection, or removal of materials near the coastline. The type and scale of the activities that it involves typically do not have the potential to affect coastal resources. Finally, it is consistent with the CZM objectives that are relevant to a project of this sort.

A copy of this Draft EA is being sent to the Office of Coastal Zone Management at the State of Hawai‘i Department of Business, Economic Development, and Tourism. The Department’s response is expected to confirm the consistency of the project with the CZM Act.

4.2.1.5 Endangered Species Act (16 U.S.C. 1531)

The Endangered Species Act (16 U.S.C. §§ 1531-1544, December 28, 1973, as amended 1976-1982, 1984 and 1988) provides broad protection for species of fish, wildlife, and plants that are listed as threatened or endangered in the U.S. or elsewhere. The Act mandates that federal agencies seek to conserve endangered and threatened species and use their authorities in furtherance of the Act's purposes. Provisions are made for listing species, as well as for recovery plans and the designation of critical habitat for listed species. The Act outlines procedures for federal agencies to follow when taking actions that may jeopardize listed species, and contains exceptions and exemptions.

Existing biota on and near the project site are discussed in Sections 3.5 and 3.7 of this EA. The discussion documents the fact that there are no known rare or endangered species on or immediately around the site of the Kapulena Well and Reservoir project. Similarly, the site does not contain unique or valuable wildlife habitat. Copies of the Draft EA are being provided to the U.S. Fish and Wildlife Service and to the State Department of Land and Natural Resources for review and comment, and their responses (if any) will be included in the *Final EA*.

4.2.1.6 Environmental Justice (Executive Order 12898)

The Environmental Justice Executive Order was issued in 1994 for the purpose of protecting low-income and minority residents of the United States from disproportionate exposure to environmental and health hazards. Section 1-101 of the Executive Order States:

> *To the greatest extent practicable and permitted by law, and consistent with the principles set forth in the report on the National Performance Review, each Federal agency shall make achieving environmental justice part of its mission by identifying and addressing, as appropriate, disproportionately high and adverse human health or environmental effects of its programs, policies, and activities on minority populations and low-income populations in the United States and its territories and possessions, the District of Columbia, the Commonwealth of Puerto Rico, and the Commonwealth of the Mariana Islands.*

As discussed in Section 3.12.1, the Census Tract in which the proposed well is located exhibits a median household income that is slightly higher than the countywide average. The unemployment rate is somewhat higher than the countywide average. The project area is not considered a low-income area. The purpose of the proposed well is to provide residents of Kukuihaele with a surface water source and additional water storage that conforms to State and Federal standards. The project will not have adverse secondary environmental, economic, or social impacts, as discussed in detail in Chapter 3. Moreover, the State and Federal regulations regarding safe drinking water are applicable to all water systems in Hawai‘i, irrespective of the economic or demographic characteristics of their residents. Thus, the proposed project complies with this Executive Order.

4.2.1.7 Farmland Protection Policy Act (7 U.S.C. § 4201)

The U.S. Congress adopted the Farmland Protection Policy Act (FPPA) (Public Law 97-98) on December 22, 1981). The U.S. Department of Agriculture (USDA), Natural Resources Conservation Service (NRCS) has national leadership for administering the FPPA. The effective date of the FPPA rule (part 658 of Title 7 of the Code of Federal Regulations) is August 6, 1984.

The stated purposes of the FPPA are to:

- Minimize the extent to which Federal programs contribute to the unnecessary and irreversible conversion of farmland to nonagricultural uses.
- Assure that Federal programs are administered in a manner that, to the extent practicable, will be compatible with State, unit of local government, and private programs and policies to protect farmland.

“Farmland”, as used in the FPPA, includes prime farmland, unique farmland, and land of statewide or local importance. “Farmland” subject to FPPA requirements does not have to be currently used for cropland. Because the Kapulena Well and Reservoir project will result in the use of 0.63 acres of prime agricultural land for the proposed well and related support facilities and might use Federal with funding assistance from a Federal agency, the proposed action is subject to the FPPA.

The area that would be affected is a small fraction of the agricultural land in the area. The project will remove a few macadamia nut trees to accommodate the construction of the well and reservoir. It will not impact continued agricultural use of the whole site. The proposed project is intended to serve residents of the small community of Kukuihaele by providing a surface water source as a result of the abandoned Kukuihaele (Wai‘ulili) Spring and replacing the costly water that is currently trucked in. Consequently, the project is in compliance with the FPPA.

4.2.1.8 Fish and Wildlife Coordination Act (16 U.S.C. § 661)

The Fish and Wildlife Coordination Act , as amended, authorizes the Secretaries of Agriculture and Commerce to require consultation with the Fish and Wildlife Service and the fish and wildlife agencies of States where the *“waters of any stream or other body of water are proposed or*

authorized, permitted or licensed to be impounded, diverted . . . or otherwise controlled or modified" by any agency under a Federal permit or license. Consultation is to be undertaken for the purpose of *"preventing loss of and damage to wildlife resources."*

As documented in this report, the proposed Kapulena Well and Reservoir project will not result in the diversion of any water body and will not result in impacts on fish or wildlife resources. The U.S. Fish and Wildlife Service and the State Department of Land and Natural Resources are being asked to comment on this Draft EA and to confirm that the project is in compliance with this statute.

4.2.1.9 Floodplain Management (Executive Order 11988 (1977), as Amended by Executive Order 12148 (1979))

Based on the latest available (December, 2001) Flood Insurance Rate Map for the area, the project site lies outside a defined floodplain. The project does not involve property acquisition, management, or construction within a 100-year flood plain (Zones A or V), and it does not involve a "critical action" within a 500-year flood plain. Consequently, it is consistent with applicable regulations and guidance relating to floodplain management.

4.2.1.10 Protection of Wetlands (Executive Order 11990 (1977), as Amended by Executive Order 12608 (1997))

There are no wetlands on or near the site. Neither are there food resources on the site that are important to wildlife that use wetlands elsewhere on the island. Copies of the *Draft EA* are being sent to the administrator of the Pacific Island Eco-Region, U.S. Fish & Wildlife Service, and to the State Department of Land and Natural Resources Department of Aquatic Resources to ensure adequate consideration of this topic in the environmental review for this project.

4.2.1.11 Safe Drinking Water Act (42 U.S.C. § 300(f))

The Safe Drinking Water Act (SDWA) is the principal federal law that ensures the quality of Americans' drinking water. Under SDWA, EPA sets standards for drinking water quality and oversees the states, localities, and water suppliers who implement those standards. The Safe Drinking Water Act requires that all public water systems meet stringent water quality standards. These standards cover a long list of potential chemical, radiological and biological contaminants. The standards distinguish between surface water and groundwater sources, with the testing and monitoring requirements for surface water and GWUDI sources being far greater than those for groundwater sources.

As discussed in this report, the proposed Kapulena Well and Reservoir will permit continued compliance of the Kukuihaele Water System with the standards mandated pursuant to the SDWA. Extensive testing of the water withdrawn from the well will be carried out by the County of Hawai'i before it is developed into a production well to ensure that the water is consistent with all State and Federal standards for potable water.

The Safe Drinking Water Act also provides the impetus behind the development of regulatory protection of principal or sole source aquifers. Part C of this Law pertains specifically to the protection of underground sources of drinking water, including the establishment of regulations on the injection of materials into subsurface aquifers in those areas of the United States where only one aquifer (principal or sole source aquifer) exists. Section 1424(e) of PL 93-523 states:

> *(e) If the Administrator determines, on his own initiative or upon petition, that an area has an aquifer which is the sole or principal drinking water source for the area and which, if contaminated, would create a significant hazard to public health, he shall publish notice of the determination in the Federal Register. After the publication of any such notice, no commitment for Federal financial assistance (through a grant, contract, loan guarantee, or otherwise) may be entered into for any project which the Administrator determines may contaminate such aquifer through a recharge zone so as to create a significant hazard to*

> *public health, but a commitment for Federal financial assistance may, if authorized under another Provision of law, be entered into to plan or design the project to assure that it will not so contaminate the aquifer.*

As identified by the U.S. Environmental Protection Agency, Region IX groundwater Office (http://www.epa.gov/OGWDW/swp/ssa/reg9.html), there are only two Sole Source Aquifers in Hawai‘i. They are the Southern O‘ahu Basal Aquifer on the Island of O‘ahu and the Moloka‘i Aquifer on the island of Moloka‘i. There are no sole source aquifers on the Island of Hawai‘i where the proposed project is located.

4.2.1.12 Wild and Scenic Rivers Act (16 U.S.C. §1271)

The purpose of this act, as stated in Section (b) of its preamble is as follows:

> *It is hereby declared to be the policy of the United States that certain selected rivers of the Nation which, with their immediate environments, possess outstandingly remarkable scenic, recreational, geologic, fish and wildlife, historic, cultural, or other similar values, shall be preserved in free-flowing condition, and that they and their immediate environments shall be protected for the benefit and enjoyment of present and future generations. The Congress declares that the established national policy of dam and other construction at appropriate sections of the rivers of the United States needs to be complemented by a policy that would preserve other selected rivers or sections thereof in their free-flowing condition to protect the water quality of such rivers and to fulfill other vital national conservation purposes.*

There are no designated Wild and Scenic Rivers in the State of Hawai‘i at this time. Consequently, the proposed project is consistent with the provisions of the Wild and Scenic Rivers Act.

4.2.1.13 Essential Fish Habitat Consultation Process Under the Magnuson-Stevens Fishery Conservation and Management Act (16 USC §1801)

The Magnuson-Stevens Fishery Conservation and Management Act (MSFCMA), which was reauthorized and amended by the Sustainable Fisheries Act (1996), requires the eight regional fishery management councils to describe and identify essential fish habitat (EFH) in their respective regions, to specify actions to conserve and enhance that EFH, and to minimize the adverse effects of fishing on EFH. Congress defined EFH as “those waters and substrate necessary to fish for spawning, breeding, feeding, or growth to maturity” (16 U.S.C. 1802(10)). The EFH guidelines under 50 CFR 600.10 further interpret the EFH definition as follows:

> *Waters include aquatic areas and their associated physical, chemical, and biological properties that are used by fish and may include aquatic areas historically used by fish where appropriate; substrate includes sediment, hard bottom, structures underlying the waters, and associated biological communities; necessary means the habitat required to support a sustainable fishery and the managed species' contribution to a healthy ecosystem; and "spawning, breeding, feeding, or growth to maturity" covers a species' full life cycle.*

The Essential Fish Habitat (EFH) provisions of the Magnuson-Stevens Act support one of the Nation’s overall marine resource management goals - maintaining sustainable fisheries. Federal action agencies which fund, permit, or carry out activities that may adversely impact EFH are required to consult with NMFS regarding the potential effects of their actions on EFH. The Western Pacific Regional Fishery Management Council Website lists EFH areas in Hawai‘i and the Pacific Islands (http://www.wpcouncil.org/maps.htm). All of the identified areas are offshore marine environments. The proposed Kapulena Well & Reservoir site is over a mile from the ocean and has no potential to impact any of the identified EFH areas (see Section 3.7.2).

4.2.2 ECONOMIC POLICY AUTHORITIES

4.2.2.1 Administration of the Clean Air Act and the Water Pollution Control Act with respect to Federal Contracts or Loans (Executive Order 11738)

This Executive Order prohibits the provision of Federal assistance to facilities that are not in compliance with either the Clean Water Act or the Clean Air Act unless the purpose of the assistance is to remedy the cause of the violation. As discussed in Sections 4.2.1.2 and 3.2.2, the proposed well and reservoir will comply with applicable provisions of the Clean Air Act and Clean Water Act. Consequently, it is consistent with the intent of this Executive Order.

4.2.2.2 Demonstration Cities and Metropolitan Development Act of 1966, Pub.L. 89-754, as Amended (42 USC § 3331)

To demonstrate compliance with this Act, the Hawai‘i State Department of Health requires DWSRF assistance recipients to describe the proposed project’s effect on local development plans. Section 4.1.1 addresses this requirement by discussing the proposed well and reservoir’s consistency with the County of Hawai‘i General Plan.

4.2.2.3 Procurement Prohibitions (Executive Order 11738, Section 306 of the Clean Air Act)

This Executive Order requires recipients of Federal assistance to certify that they will not procure goods, services or materials from suppliers who are on the EPA’s list of Clean Air Act violators. DWS will comply with this requirement in selecting contractors, construction materials, and other services for the Kapulena Well and Reservoir project.

4.2.2.4 Procurement Prohibitions (Section 508 of the Clean Water Act)

This Executive Order requires recipients of Federal assistance to certify that they will not procure goods, services or materials from suppliers who are on the EPA’s list of Clean Water Act violators. DWS will comply with this requirement in selecting contractors, construction materials, and other services for the Kapulena Well and Reservoir project.

4.2.3 SOCIAL POLICY AUTHORITIES

4.2.3.1 Age Discrimination Act of 1975 (42 USC § 6102)

This Act stipulates that no person in the United States shall, on the basis of age, be excluded from participation in, be denied the benefits of, or be subjected to discrimination under any program or activity receiving Federal financial assistance. DWS will comply with this requirement in hiring contractors and other staff for its Kapulena Well and Reservoir project.

4.2.3.2 Civil Rights Act of 1964, Title VI (42 USC §2000(d))

This Act stipulates that no person in the United States shall, on the grounds of race, color, or national origin, be excluded from participation in, be denied the benefits of, or be subjected to discrimination under any program or activity receiving Federal financial assistance. DWS will comply with this requirement in hiring contractors and other staff for its Kapulena Well and Reservoir project.

4.2.3.3 Equal Employment Opportunity (Executive Order 11246, as amended)

This Executive Order requires all recipients of Federal contracts to include certain non-discrimination and “affirmative action” provisions in all contracts. The provisions commit the contractor or subcontractor to maintain a policy of non-discrimination in the treatment of employees, to make this policy known to employees, and to recruit, hire and train employees without regard to race, color, sex, religion and national origin. DWS will include these provisions in all contracts for the Kapulena Well and Reservoir project.

4.2.3.4 Minority Business Enterprise Development (Executive Order 12432)

This Executive Order sets forth in more detail the responsibilities of Federal agencies for the monitoring, maintaining of data and reporting of the use of minority enterprises. DWS will comply with all applicable requirements pertaining to this Executive Order.

4.2.3.5 National Program for Minority Business Enterprise (Executive Order 11625)

This Executive Order directs Federal agencies to promote and encourage the use of minority business enterprises in projects utilizing federal funds. DWS will comply with this Executive Order in selecting contractors, goods, and services for its Kapulena Well and Reservoir project.

4.2.3.6 National Women's Business Enterprise Policy and National Program for Women's Business Enterprise (Executive Order 12138)

This Executive Order directs each department or agency empowered to extend Federal financial assistance to any program or activity to issue regulations requiring the recipient of such assistance to take appropriate affirmative action in support of women's business enterprises and to prohibit actions or policies which discriminate against women's business enterprises on the grounds of sex. DWS will comply with this Executive Order in selecting contractors, goods, and services for its Kapulena Well and Reservoir project.

4.2.3.7 Rehabilitation Act of 1973 (29 USC § 794)

This Act stipulates that no otherwise qualified handicapped individual in the United States shall, solely by reason of his handicap, be excluded from participation in, be denied the benefits of, or be subjected to discrimination under any program or activity receiving Federal financial assistance. DWS will comply with this requirement for its Kapulena Well and Reservoir project.

4.2.3.8 Small Business Administration Reauthorization and Amendment Act of 1998 (Pub. L. 100-590, Section 129)

This Amendment directs Federal agencies to promote and encourage the use of small business enterprises in projects utilizing federal funds. DWS will comply with this Act in selecting contractors, goods, and services for its Kapulena Well and Reservoir project.

4.2.3.9 Department of Veterans Affairs and Housing and Urban Development, and Agencies Appropriations Act (1993, Pub. L. 102-389)

This Act requires the Administrator of the Environmental Protection Agency to ensure that at least 8 per centum of Federal funding for prime and subcontracts awarded in support of authorized programs, including grants, loans and contracts for wastewater treatment and for leaking under ground storage tanks, be made available to businesses or other organizations owned or controlled by socially and economically disadvantaged individuals (within the meaning of Section 8(a)(5) and (6) of the Small Business Act (15 USC 637(a)(5) and (6)), including historically black colleges and universities. DWS will comply with applicable provisions of this Act in selecting contractors, goods, and services for its Kapulena Well and Reservoir project and will include this provision in the specifications of all contracts funded for this project.

4.2.3.10 Disadvantaged Business Enterprise Rule (2008, 40 CFR Part 33)

This Rule sets forth the responsibilities of entities receiving an identified loan under a financial assistance agreement capitalizing a revolving loan fund, for the monitoring, maintaining of data and reporting of the use of disadvantaged business enterprises (DBEs). It requires the Applicant to fully comply with 40 CFR Part 33, entitled "Participation by Disadvantaged Business Enterprises in Procurement Under Environmental Protection Agency (EPA) Financial Assistance Agreements" and ensure that all contracts funded by a DWSRF loan include a term or condition requiring compliance with 40 CFR Part 33. The Rule further stipulates that the applicant shall not discriminate on the basis of race, color, national origin, or sex in the performance of its contract and that the applicant carry out

applicable requirements of 40 CFR Part 33 in the award and administration of contracts awarded under EPA financial assistance agreements. DWS will comply with all applicable provisions of this rule for its Kapulena Well and Reservoir project, including timely completion and submission of the DBE Subcontractor Performance and Utilization Forms (respectively, EPA Forms 6100-3 and 6100-4), as appropriate.

4.2.4 MISCELLANEOUS AUTHORITIES

4.2.4.1 Debarment and Suspension (Executive Order 12549)

Prior to the award of a consultant or construction contract, the Applicant (County) shall fully comply with Subpart C of 40 CFR Part 32, entitled "Responsibilities of Participants Regarding Transactions" and ensure that any lower tier covered transaction and subsequent lower tier transaction, includes a term or condition requiring compliance with Subpart C. The Applicant shall certify that the General Contractor, Consultant, sub-consultants, subcontractors and suppliers are not on the Excluded Parties List. The Applicant acknowledges that failing to disclose the information required under 40 CFR 32.335 may result in the delay or negation of payment, or pursuance of legal remedies, including suspension and debarment. The Applicant may access the Excluded Parties List System at http://epls.arnet.gov. DWS will include a condition in all contracts funded for this project that will terminate the contract should the contractor be determined to be an Excluded Party under this Executive Order.

4.2.4.2 Uniform Relocation and Real Property Acquisition Policies Act (Pub. L. 91-646 (1971), as Amended, 42 USC 4601-4655)

The Act establishes a policy for fair and equitable treatment of persons who are displaced from their homes, farms or businesses to make way for a federally-assisted project. No such displacements are anticipated for the Kapulena Well and Reservoir project. However, should any such displacements occur as a result of the project, DWS will ensure that the affected parties will receive fair and equitable treatment consistent with this law.

4.2.4.3 Preservation of Open Competition and Government Neutrality towards Contractor's Labor Relations on Federal and Federally Funded Construction Projects (Executive Order 13202 (2001), as amended by Executive Order 13208 (2001))

DWSRF assistance recipients must ensure that bid specifications, project agreements, and other controlling documents for construction contracts awarded after February 17, 2001 do not require or prohibit agreements with labor organizations. Further, DWSRF assistance recipients and any construction manager acting upon their behalf must not otherwise discriminate against bidders, offerors, contractors, or subcontractors for entering into, or refusing to enter into, agreements with labor organizations. DWS will comply with applicable provisions of this Act in selecting contractors, goods, and services for its Kapulena Well and Reservoir project and will include this provision in the specifications of all contracts funded for this project.

THIS PAGE INTENTIONALLY LEFT BLANK

5.0 ANTICIPATED DETERMINATION

5.1 SIGNIFICANCE CRITERIA

Hawaii Administrative Rule §11-200-11.2 establishes procedures for determining if an environmental impact statement (EIS) should be prepared or if a finding of no significant impact is warranted. §11-200-11.2 (1) provides that proposing agencies should issue an environmental impact statement preparation notice (EISPN) for actions that it determines may have a significant effect on the environment. Hawaii Administrative Rules §11-200-12 lists the following criteria to be used in making that determination:

In m*ost instances, an action shall be determined to have a significant effect on the environment if it:*

1. *Involves an irrevocable commitment to loss or destruction of any natural or cultural resource;*
2. *Curtails the range of beneficial uses of the environment;*
3. *Conflicts with the State's long-term environmental policies or goals as expressed in Chapter 344, HRS, and any revisions thereof and amendments thereto, court decisions, or executive orders;*
4. *Substantially affects the economic or social welfare of the community or State;*
5. *Substantially affects public health;*
6. *Involves substantial secondary impacts, such as population changes or effects on public facilities;*
7. *Involves a substantial degradation of environmental quality;*
8. *Is individually limited but cumulatively has considerable effect on the environment or involves a commitment for larger actions;*
9. *Substantially affects a rare, threatened, or endangered species, or its habitat;*
10. *Detrimentally affects air or water quality or ambient noise levels;*
11. *Affects or is likely to suffer damage by being located in an environmentally sensitive area such as a flood plain, tsunami zone, beach, erosion-prone area, geologically hazardous land, estuary, fresh water, or coastal waters;*
12. *Substantially affects scenic vistas and viewplanes identified in county or state plans or studies; or,*
13. *Requires substantial energy consumption.*

5.2 FINDINGS

The potential effects of constructing and operating the proposed Kapulena Well and Reservoir described earlier in this document were evaluated using these significance criteria. The findings with respect to these criteria are summarized in subsections 5.2.1 through 5.2.13.

5.2.1 IRREVOCABLE LOSS OR DESTRUCTION OF VALUABLE RESOURCE

The proposed project would be constructed on a macadamia nut orchard adjacent to an existing Department of Water Supply facility. It does not involve the loss of any significant cultural or natural resources.

5.2.2 CURTAILS BENEFICIAL USES

Construction and operation of the proposed well and reservoir will not curtail beneficial uses of the site. The development affects less than an acre of land and will not preclude or disrupt future use of the surrounding agricultural land.

5.2.3 CONFLICTS WITH LONG-TERM ENVIRONMENTAL POLICIES OR GOALS

The proposed project is consistent with the County of Hawai‘i’s General Plan (see Section 4.1) and with the State’s long-term environmental policies and goals as expressed in Chapter 344, Hawaii Revised statutes and elsewhere in State law.

5.2.4 SUBSTANTIALLY AFFECTS ECONOMIC OR SOCIAL WELFARE

The proposed well is intended to provide a surface water source and additional water storage to existing residents of Kukuihaele. It will not have a substantial adverse effect on economic or social welfare. Rather, it allows the DWS to assure its customers that they have access to an adequate supply of high-quality potable water, consistent with the maintenance of environmental quality.

5.2.5 PUBLIC HEALTH EFFECTS

The proposed project will not adversely affect air or water quality. Neither will it generate solid waste or produce other emissions that will have a significant adverse effect on public health. Construction noise has the potential to exceed noise standards at the property line, but the potential adverse effects of this can be mitigated by the noise abatement and attenuation measures that the County will require of the construction contractor.

5.2.6 PRODUCE SUBSTANTIAL SECONDARY IMPACTS

The proposed project will not produce significant secondary impacts. It is not designed to foster population growth or to promote economic development.

5.2.7 SUBSTANTIALLY DEGRADE ENVIRONMENTAL QUALITY

The proposed project will not have substantial long-term environmental effects. Noise from construction and pump testing is the only impact of note, and it will be of limited duration. So long as adequate measures are taken to control the intensity of the construction noise and the time of day during which it will occur, its effects on nearby properties can be managed.

5.2.8 CUMULATIVE EFFECTS OR COMMITMENT TO A LARGER ACTION

Construction and operation of the proposed well and reservoir do not constitute a commitment to a larger action and are not intended to facilitate substantial population growth. Instead, the project is intended to primarily provide a surface water source and additional storage to support the existing water system.

5.2.9 AFFECTS A RARE, THREATENED, OR ENDANGERED SPECIES

The proposed project will be constructed on a privately owned portion of a macadamia nut orchard that has been heavily disturbed for agricultural use, which is adjacent to a DWS-owned site. It will not utilize a resource needed for the protection of rare, threatened, or endangered species.

5.2.10 AFFECTS AIR OR WATER QUALITY OR AMBIENT NOISE LEVELS

Construction and operation of the proposed well and reservoir will not have a measurable effect on air or water quality. Neither will they have a long-term effect on noise levels. The project does have the potential to increase noise levels during the construction phase. Adequate mitigation measures will be taken to limit these to reasonable levels.

5.2.11 ENVIRONMENTALLY SENSITIVE AREAS

There are no environmentally sensitive areas or resources in the immediate vicinity of the proposed project. While the Island of Hawai‘i as a whole is subject to certain geologic hazards, such as earthquakes, tsunami, and lava flows, the project site is in an area that has a relatively low frequency of lava flows and is above the tsunami evacuation zone. All structures will be constructed consistent with the Hawai‘i Uniform Building Code for Earthquake Zone 4.

5.2.12 AFFECTS SCENIC VISTAS AND VIEWPLANES

The appearance of the proposed well, reservoir and equipment building will be similar in nature to the facilities already existing at the site. They will not significantly alter the visual character of the site or change views across it.

5.2.13 REQUIRES SUBSTANTIAL ENERGY CONSUMPTION

Energy required for operation of the proposed well will be more than offset by the energy currently used to deliver water to the service area using trucks. This will result in a substantial decrease in energy consumption for the delivery of water to the service area customers.

5.3 ANTICIPATED DETERMINATION

In view of the foregoing, the DWS concludes that the proposed project will not have a significant adverse impact on the environment. Consequently, it anticipates issuing a Finding of No Significant Impact for the proposed action.

THIS PAGE INTENTIONALLY LEFT BLANK

6.0 BIBLIOGRAPHY

Armstrong, R.W. (ed.), (1983). *Atlas of Hawaii.* Honolulu: University of Hawaii Press. (Second edition).

County of Hawaii (2005) *Hawaii County General Plan.* URL: http://www.hawaii-county.com/la/gp/2005/main.html

CWRM (State of Hawai‘i Commission on Water Resource Management). (1995) *Ground Water Hydrologic Units.* In Water Data Section of CWRM web site. URL: http://www.state.hi.us/dlnr/cwrm/data/maps.htm

DOH (State of Hawaii Department of Health) (2008) *Facilities, Sites, or Areas in which HEER has an Interest.* URL: http://www.state.hi.us/health/eh/heer/records.html

––– (2005) *Groundwater Contamination Maps for the State of Hawai`i, 2005.* Environmental Health Division, Safe Drinking Water Branch. URL: http://www.state.hi.us/health/environmental/water/sdwb/conmaps/conmaps.html

–––(2000) *Classification of Hawaii State Waters.* URL: http://www.state.hi.us/health/eh/cwb/wqmaps/wqstand.htm

DWS (County of Hawai‘i Department of Water Supply) (2007) *Kukuihaele Water System Annual Water Quality Report*.

–––(2006) *20-Year Water Master Plan*, June 2006.

EPA (U.S. Environmental Protection Agency) (2008) *List of Contaminants & Their Maximum Contaminant Level (MCLs).* URL: http://www.epa.gov/safewater/contaminants/index.html#mcls

––– (2002) *Pesticides Tolerance Reassessment and Reregistration: Atrazine Summary.* URL: http://www.epa.gov/pesticides/reregistration/atrazine/

––– (2000) *Drinking Water Standards and Health Advisories.* Office of Water. EPA 822-B-00-001, 18 p.

Hazlett, A., Shideler, D., and Hammatt, H. (2007) *Supplemental Archaeological Surveying, Recordation, Monitoring, Discovery, and Data Recovery Plan for the Hamakua Ditch System, Lalakea, Kukuihaele, Kanahonua, Waio‘eko‘e, Kea‘a, Pu‘u‘6paha, Kalakala‘ula, Mo‘oiki 1, Hanapai, Niupuka, Kana, Pa‘ak6, Puanui, Papalapuka, Waik6loa, Wai‘ale‘ale, Kapulena, Ka‘auhuhu, Ke‘ahakea, Hauko‘I, Mo‘oiki 2, Manae, Kapoa‘ula, Malanahae and Honokai‘a Ahupua‘a, Hamakua District, Hawai‘i Island, Portions of TMK: [3] 4-06, 4-07, and 4-08. Cultural Surveys Hawai‘I Job Code: LALAKEA 1*. Prepared for Belt Collins Hawaii, Ltd.

Macdonald, G.A., A.T. Abbott, and F.L. Peterson. (1983). *Volcanoes in the Sea: The Geology of Hawai‘i.* 2nd Edition. Honolulu: University Press, 517 p.

NPS (National Park Service, U.S. Department of the Interior) (2009) Nationwide Rivers Inventory, Hawai‘i Segments. URL: http://www.nps.gov/ncrc/programs/rtca/nri/states/hi.html

NOAA (National Oceanic and Atmospheric Administration) (2002) *CLIMATOGRAPHY OF THE UNITED STATES NO. 81: Monthly Station Normals of Temperature, Precipitation, and Heating and Cooling, Degree Days1971 - 2000* . 51 Hawai‘i. 21 p.

OEQC (Office of Environmental Quality Control, State of Hawai‘i). (1997). *Guidelines for Assessing Cultural Impacts*. Adopted by the Environmental Council; November 19, 1997.

State of Hawaii (2002a) *Hawaii Statewide GIS Program.* Office of Planning, Department of Business, Economic Development and Tourism. URL: http://www.hawaii.gov/dbedt/gis/

––– (2002b) *(ALISH) Maps.* URL: http://www.state.hi.us/dbedt/gis/misc**maps**.htm

Stearns, H.T., and G.A. MacDonald. (1946). *Geology and Ground-Water Resources of the Island of Hawaii.* Hawaii Division Hydrography Bulletin 9.

USDA (United States Department of Agriculture) (2008) *Web Soil Survey*. Natural Resources Conservation Service. URL: http://websoilsurvey.nrcs.usda.gov/app/HomePage.htm

USGS (United States Geological Survey) (1997a). *Hazards in Hawaii.* URL: http://hvo.wr.usgs.gov/earthquakes/hazards/

−−−(1997b) *Lava Flow Hazard Zone Maps.* Compiled by USGS Staff Donal Mullineaux and Donald Peterson. URL: http://pubs.usgs.gov/gip/hazards/maps.html

−−−(1994). *Seismic Hazards on the Island of Hawai‘i.* URL: http://wwwhvo.wr.usgs.gov/volcanowatch/1994/94_08_05.html

WMO (World Meteorological Organization) (1989) *Calculation of Monthly and Annual 30-Year Standard Normals*. WCDP-No. 10, WMO-TD/No. 341, Geneva: World Meteorological Organization.

Yamamoto, M.N. and A.W. Tagawa (2000) *Hawai‘i’s Native and Exotic Freshwater Animals.* Mutual Publishing, Honolulu, HI 200 p.

Yoshimori, B.E. (2009) *Personal Communication with Greg Fukimitsu*, TNWRE, March 11, 2009.

7.0 PARTIES CONSULTED

7.1 CONSULTATION

The Hawai‘i County Planning Department was consulted during the preparation of this EA. The public will have an opportunity to review and comment on the document in accordance with HRS Chapter 343.

7.2 DISTRIBUTION

Copies of this *Draft EA* are being mailed to the organizations specified in the office of Environmental Quality Control’s Distribution List for Draft EAs (see Table 7.1). Notice of the *Draft EA* will be printed in the *Environmental Notice* published by the State Office of Environmental Quality Control. The public will have 30 days from the publication date to comment on the proposed project in accordance with HRS Chapter 343.

Table 7.1 Preliminary Draft EA Distribution List

Federal Agencies	
Environmental Protection Agency, Pacific Islands Contact Office	District Engineer, U.S. Army Engineer District, Honolulu
U.S. Department of Agriculture, Natural Resources Conservation Service	U.S. Fish & Wildlife Service, Pacific Island Eco-Region
District Chief, Geological Survey, Department of the Interior	
State Agencies	
Office of Environmental Quality Control (4 copies)	Department of Business and Economic Development & Tourism, Planning Office
Department of Hawaiian Home Lands	Department of Health, Clean Water Branch
Office of Hawaiian Affairs	Department of Health, Environmental Planning Office (3 copies)
Department of Accounting and General Services	Department of Health, Safe Drinking Water Branch
Department of Agriculture	Department of Land and Natural Resources (5 copies)
Commission on Water Resource Management	DLNR Historic Preservation Division
DOT Highways Division	Environmental Center, University of Hawai‘i
	Water Resources Center, University of Hawai‘i
County of Hawai‘i	
Planning Department	Fire Department
Department of Public Works	Police Department
Department of Parks and Recreation	Department of Environmental Management, Solid Waste Division
Utilities	
Hawaiian Electric Light Company	Hawaiian Telcom
Libraries and Depositories	
Hawai‘i State Library Hawai‘i Documents Center	Hilo Public Library
University of Hawai‘i, Hilo Campus Library	Honoka‘a Public Library
DBEDT Library	

Copies of the DEA will also be sent to the landowners that abut the project sites and the existing access road nearest to the proposed electrical extension. Table 7.2 lists the owners and Tax Map Key numbers of these neighbors.

Table 7.2 Neighboring Landowners Sent Copies of the Draft Environmental Assessment

Landowner Name	*Property Tax Map Key(s)*
Marcel & Connie Hernandez	4-7-001:013
Noel & Yoshiharu Hamasaki	4-7-001:014
Mikie Taguchi	4-7-001:015
B P Bishop Estate	4-7-001:016
Jon M. & Faye T. Higashi	4-7-002:019
Iris K.H. Dochin	4-7-002:020
Oran Murakane	4-7-002:026
Edith Margaret Bickle	4-7-002:027
Kawaikalia Akua Farms LLC	4-7-002:031
Angela Lorraine Ho	4-7-002:033
Kapulena Orchards Ranch LLC	4-7-002:034
Alan Suzuki	4-7-002:035
Rick T. Martin	4-7-008:015
Hawaii Land Partners	4-7-008:019
Apolinario & Corazon Collado	4-7-008:021
Source: Hawai‘i County Real Property Tax Office	

APPENDIX A STATE HISTORIC PRESERVATION DIVISION LETTER AND ARCHAEOLOGICAL RECONNAISSANCE SURVEY REPORT

LINDA LINGLE
GOVERNOR OF HAWAII

LAURA H. THIELEN
CHAIRPERSON
BOARD OF LAND AND NATURAL RESOURCES
COMMISSION ON WATER RESOURCE MANAGEMENT

RUSSELL Y. TSUJI
FIRST DEPUTY

KEN C. KAWAHARA
DEPUTY DIRECTOR - WATER

AQUATIC RESOURCES
BOATING AND OCEAN RECREATION
BUREAU OF CONVEYANCES
COMMISSION ON WATER RESOURCE MANAGEMENT
CONSERVATION AND COASTAL LANDS
CONSERVATION AND RESOURCES ENFORCEMENT
ENGINEERING
FORESTRY AND WILDLIFE
HISTORIC PRESERVATION
KAHOOLAWE ISLAND RESERVE COMMISSION
LAND
STATE PARKS

STATE OF HAWAII
DEPARTMENT OF LAND AND NATURAL RESOURCES

STATE HISTORIC PRESERVATION DIVISION
601 KAMOKILA BOULEVARD, ROOM 555
KAPOLEI, HAWAII 96707

January 23, 2009

Robert B. Rechtman, Ph.D.
Rechtman Consulting LLC
507-A E. Lanikaula Street
Hilo, Hawaii 96720

LOG NO: 2009.0046
DOC NO: 0901MD37
Archaeology

Dear Dr. Rechtman:

SUBJECT: Chapter 6E-8 Historic Preservation Review –
Request for "No Effect" for the Kaupulena Well
Hauko'i Ahupua'a, Hamakua District, Island of Hawai'i
TMK: (3) 4-7-002:029 & 035 (por.) and 4-7-008:019 (por.)

This letter is a reply to your letter/report (RC-0487) request for a no effect determination for the aforementioned project, which we received on January 22, 2009. This project will cross, but not affect, a portion of the Lower Hamakua Ditch. We determine that **no historic properties will be affected** by this project because:

- ☐ Intensive cultivation has altered the land
- ☒ Residential development/urbanization has altered the land
- ☒ Previous grubbing/grading has altered the land
- ☐ An accepted archaeological inventory survey (AIS) found no historic properties
- ☐ SHPD previously reviewed this project and mitigation has been completed
- ☒ Other: *On January 16, 2009, qualified archaeologists from you firm (Rechtman and Clark) performed a field inspection of the project area and determined no historic properties were present; we concur with that assessment.*

In the event that historic resources, including human skeletal remains, cultural materials, lava tubes, and lava blisters/bubbles are identified during the construction activities, all work needs to cease in the immediate vicinity of the find, the find needs to be protected from additional disturbance, and the State Historic Preservation Division, Hawaii Island Section, needs to be contacted immediately at (808) 933-7653. If you have questions about this letter please contact Morgan Davis at (808) 933-7650.

Aloha,

Nancy A. McMahon

Nancy McMahon, Deputy SHPO/State Archaeologist
and Historic Preservation Manager
State Historic Preservation Division

RECHTMAN CONSULTING, LLC
507-A E. Lanikaula St. Hilo, Hawaii 96720
phone: (808) 969-6066 fax: (808) 443-0065
e-mail: bob@rechtmanconsulting.com
ARCHAEOLOGICAL, CULTURAL, AND HISTORICAL STUDIES

January 22, 2009 RC-0487

Morgan Davis
Assistant Hawai‘i Island Archaeologist
DLNR-SHPD
40 Po‘okela Street
Hilo, HI 96720

Dear Morgan:

At the request of Tom Nance Water Resources Engineering, Inc., on behalf of their client the County of Hawai‘i Department of Water Supply, Rechtman Consulting, LLC has prepared this request for determination of “no historic properties affected” associated with the development of a well (referred to as the Kapulena Well), a 0.3 million gallon (MG) water tank, and an associated 20-foot wide access/utility corridor within TMKs: 3-4-7-02:29, 35, and 3-4-7-08:19 in Hauko‘i Ahupua‘a, Hāmākua District, Island of Hawai‘i (Figures 1, 2, and 3). TMK: 3-4-7-08:19 is a 7,726 square foot utility easement and 30-foot road reserve that provides access to several parcels *mauka* of Highway 240 (the Honoka‘a-Waipi‘o Government Road; Figure 4). TMK: 3-4-7-02:29 is 0.104 acre parcel owned by County of Hawai‘i that is the location of an existing 50,000 gallon water tank (Figure 5). TMK: 3-4-7-02:35 is a privately owned, 41.303 acre parcel that has a 15-foot wide road and pipeline easement running across it between the two other parcels. A dirt road that follows the easement across Parcel 35 provides access to the existing water tank from Highway 240 (Figure 6). The Kapulena Well development plans call for the preparation of a 250 x 200 foot area for the proposed well pad and tank location (on Parcel 35), the use of a roughly 100 x 50 foot area for the storage of construction materials (on Parcel 35), and the realignment and improvement of the existing access road (on Parcels 19 and 35). The water tank on Parcel 29 will be updated and tied into the new infrastructure, but no additional land disturbance will occur on that parcel. The County of Hawai‘i has an agreement in place for the fee-simple purchase of the proposed development areas on Parcel 35.

The subject parcels have all been previously grubbed and graded. In addition to the existing road and water infrastructure described above, the privately-owned Parcel 35 contains a macadamia nut orchard (Figure 7) and a single family residence. Terrain within the proposed development area slopes consistently to the north. Elevations range from approximately 900 feet above sea level at Highway 240 to 1,060 feet above sea level at the proposed location of the well pad. The soil within the project area is classified as Kukaiau silty clay loam on 12 to 20 percent slopes (KuD). This soil is dissected by many, deep, narrow gulches. The surface layer consists of very dark grayish-brown silty clay loam about 10 inches thick, and the subsoil is dark-brown silty clay loam about 40 inches thick. It is underlain by basalt. The surface layer is extremely acidic, and the subsoil is medium to slightly acidic. This soil dehydrates irreversibly into aggregates the size of fine sand (USDA-NRCS web site). The underlying lava flow originated from Mauna Kea more than 10,000 years ago (Wolfe and Morris 1996).

Cordy (1994), in his regional synthesis of the Hāmākua District, summarizes the general land use patterns for the subregion of East Hāmākua based on a review *Māhele* records and a detailed examination of archival historical information. Cordy (1994) defines four general envirionmental zones within the subregion: (1) the Sea-shore, (2) The Seaward Upland Slopes, (3) the ‘Ōhi‘a-Koa Forest Zone, and (4) The Gulches. The current project area falls within The Seaward Upland Slopes, which was the farming and housing zone of East Hāmākua. House sites in this zone were common between the sea cliffs and the cross-island trail (present day Māmalahoa Highway). Garden plots (*mala*, *kihapai*, and *kula*), which were

generally non-irrigated, tended to be located in proximity to the houselots, with some scattered fields in the *mauka* regions. Dryland taro was the dominant crop, but sweet potatoes and bananas were also commonly grown in this zone.

Cordy (1994) follows his discussion of general land use patterns in East Hāmākua with a review of *Māhele* documents from ten specific *ahupuaʻa*, including Haukoʻi Ahupuaʻa. Haukoʻi is a narrow *ahupuaʻa* that extends only 2.5 miles inland from the shore. Four Land Commision Awards (LCAw.) were issued in Haukoʻi, all of which were for houselots and farm plots located within 1.25 miles of the sea. The names of two *'ili* are mentioned in the testimony for these awards; Haleolona and Papuaa. Taro, bananas, breadruit, coffee, *ʻawa*, and *wauke* were named as crops that were grown, and a pig sty is also mentioned. Cordy relates that, "Puhalahua was the konohiki of Haukoʻi, and his luna seems to have cared for his land, "hog sty", and his houselot" (1994:70).

TMK: 3-4-7-08:19 of the current study area is a portion of LCAw. 8381 to Kaaeae. Kaaeae's claim was for two houses and six agricultural sections. The claim mentions fifteen *mala* or *kihapai*, fourteen of which were planted in unspecified food crops, and one of which was planted in*ʻawa*. TMKs: 3-4-7-02:29 and 35 are portions of Grant No. 2449, which was purchased by Pili et al. in 1857. The grant parcel is located along the *mauka* edge of the *kuleana* parcel. No information was obtained relative to the use of this grant parcel.

In 1878 the first sugar mill was established in the Hāmākua District. Due to it's rich soil and plentiful water supply the district soon became the premiere location for growing sugar on the Island of Hawaiʻi (Hazlett et al. 2007). In 1909 the Hawaiian Irrigation Company began work on the Lower Hāmākua Ditch. The ditch carried water twenty-four miles from the Waipio Stream to Paahau Plantation, irrigating the fields of the Kukuihaele and Honokaa Plantations along the way. By 1979, these plantations had merged with others in the area to create the Hamakua Sugar Company, a plantation that stretched along the Hāmākua coast for thirty-five miles and inland to a distance of four miles. The sugar company initially prospered, but then went bankrupt, and closed its doors in 1993 (Hazlett et al. 2007).

The current project area was a part of the Hamakua Sugar Plantation. The Lower Hāmākua Ditch crosses through a tunnel beneath the existing road easement on TMK: 3-4-7-02:35 (Figure 8). According to the land owner, Parcel 35 was never planted in sugarcane because the ground was too rocky, but it was used as an experimental plot for growing macadamia nuts. As a result of this experiment, several different varieties of macadamia nut trees are still present on the parcel.

On January 16, 2009, Robert B. Rechtman, Ph.D. and Matthew R. Clark, B.A. performed a field inspection of the project area, the limits of which were clearly identifiable in the field. The entire surface of the proposed development area, which appears to have been 100% mechanically altered in the past, was visually inspected. No archaeological resources were observed within the project area and given the extensive ground disturbance and the nature of the substrate the likelihood of encountering subsurface resources is extremely remote. Based on these negative findings, on behalf of our client, we are requesting that DLNR-SHPD issue a written determination of "no historic properties affected" in accordance with HAR 13§13-284-5(b)1.

In the unlikely event that archaeological resources are encountered during future development activities within the current study area, work in the immediate area of the discovery will be halted and DLNR-SHPD contacted as outlined in Hawaiʻi Administrative Rules 13§13-275-12.

Should you require further information, or wish to visit the project area, please contact me directly.

Respectfully,

Bob Rechtman, Ph.D.
Principal Archaeologist

References Cited

Cordy, R.
1994 A Regional Synthesis of Hāmākua District, Island of Hawaiʻi. Historic Preservation Division, Department of Land and Natural Resources, State of Hawaiʻi.

Hazlett, A., Shideler, D., and Hammatt, H.
2007 Supplemental Archaeological Surveying, Recordation, Monitoring, Discovery, and Data Recovery Plan for the Hamakua Ditch System, Lālākea, Kukuihaele, Kanahonua, Waioʻekoʻe, Keaʻā, Puʻuʻōpaha, Kalakalaʻula, Moʻoiki 1, Hanapai, Niupuka, Kana, Paʻakō, Puanui, Papalapuka, Waikōloa, Waiʻaleʻale, Kapulena, Kaʻauhuhu, Keʻahakea, Haukoʻi, Moʻoiki 2, Manae, Kapoaʻula, Malanahae and Honokaiʻa Ahupuaʻa, Hāmākua District, Hawaiʻi Island, Portions of TMK: [3] 4-06, 4-07, and 4-08. Cultural Surveys Hawaiʻi Job Code: LALAKEA 1. Prepared for Belt Collins Hawaii, Ltd.

Wolfe, E., and J. Morris
1996 Geologic Map of the Island of Hawaiʻi. Geologic Investigations Series Map 1-2524-A. U.S. Department of the Interior, U.S. Geological Survey.

Figure 1. Project area location.

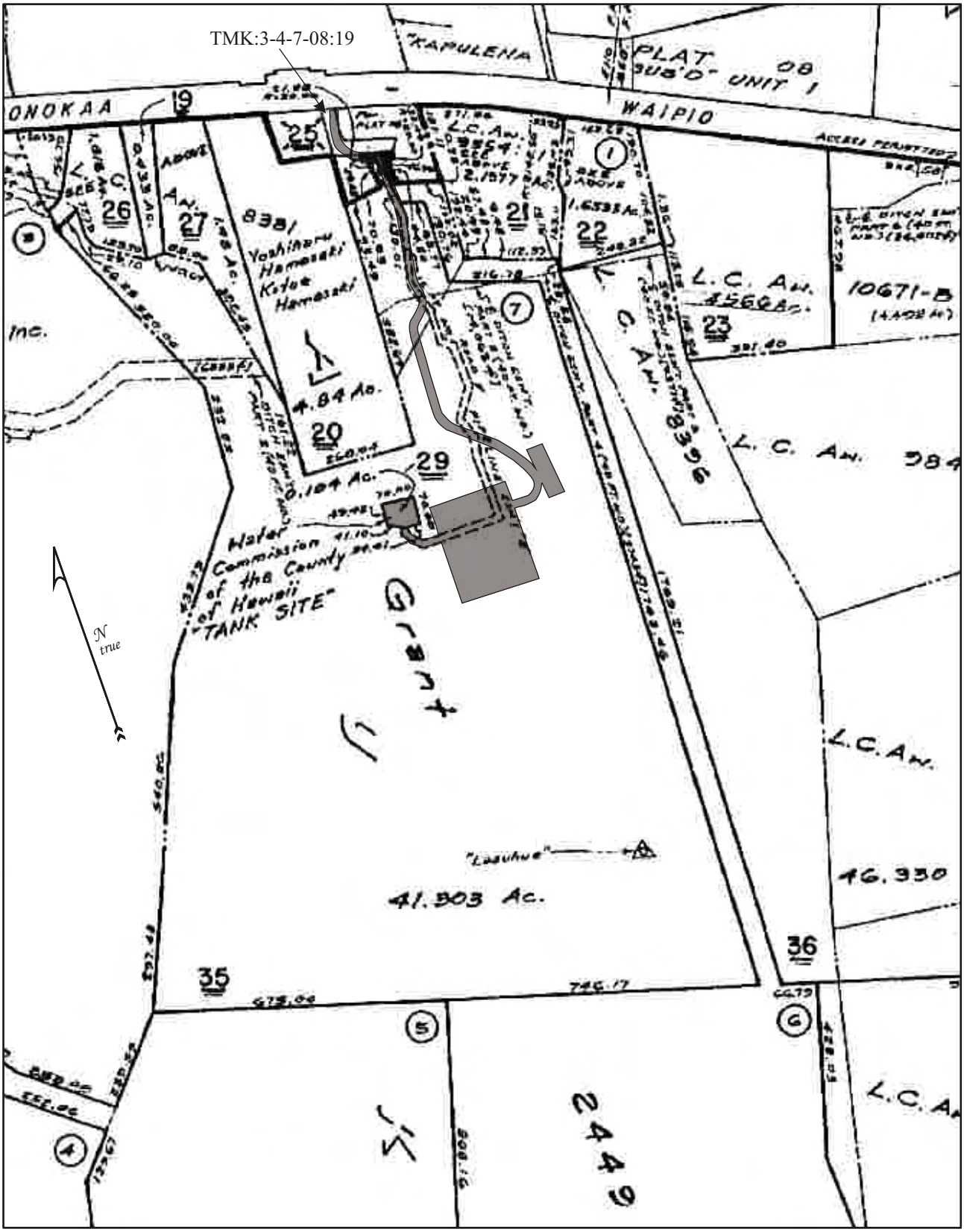

Figure 2. Portion of Tax Map Key (TMK): 3-4-7-02 showing the proposed development area (shaded).

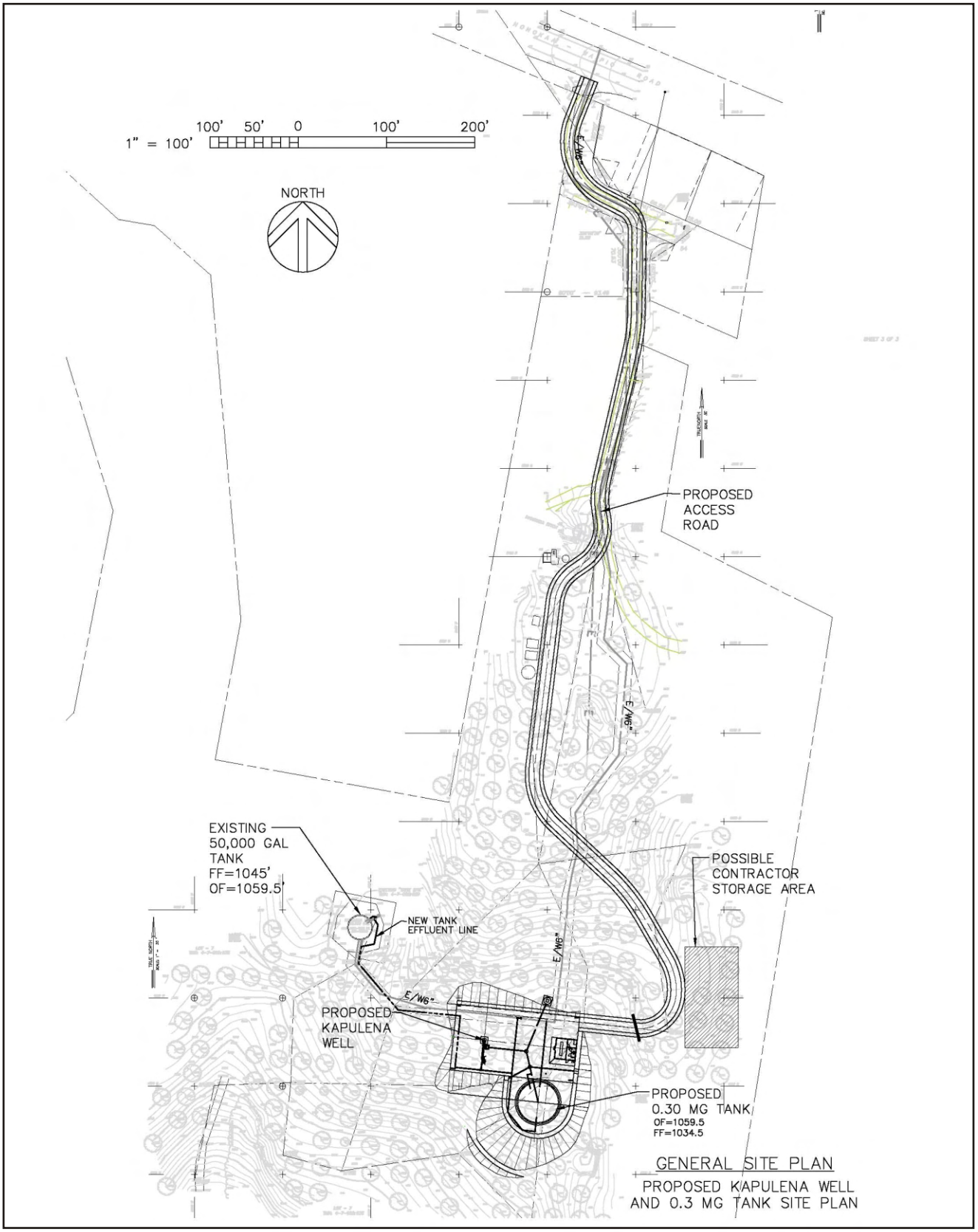

Figure 3. General site plan of the proposed development area.

Figure 4. View to northwest of the existing access road on TMK: 3-4-7-08:19.

Figure 5. View to north of the existing 50,000 gallon water tank on TMK: 3-4-702:29.

Figure 6. View to south of the existing access road on TMK: 3-4-7-02:35

Figure 7. View to east of the macadamia nut orchard at the proposed well pad location.

Figure 8. View to east of the Lower Hāmākua Ditch passing beneath the existing road.