ALAN M. ARAKAWA
Mayor

DAVID C. GOODE
Director

ROWENA M. DAGDAG-ANDAYA
Deputy Director

Telephone: (808) 270-7745
Fax: (808) 270-7975

FILE COPY
JUL 23 2012

COUNTY OF MAUI
DEPARTMENT OF PUBLIC WORKS
ENGINEERING DIVISION
200 SOUTH HIGH STREET
WAILUKU, MAUI, HAWAII 96793

RALPH NAGAMINE, L.S., P.E.
Development Services Administration

CARY YAMASHITA, P.E.
Engineering Division

BRIAN HASHIRO, P.E.
Highways Division

June 25, 2012

RECEIVED
'12 JUL -2 P2:53
OFC. OF ENVIRONMENTAL QUALITY CONTROL

Mr. Gary Hooser, Director
Office of Environmental Quality Control
State of Hawaii
235 South Beretania Street, Suite 702
Honolulu, Hawaii 96813

SUBJECT: DRAFT ENVIRONMENTAL ASSESSMENT (EA)
FOR THE PROPOSED HAIKU ROAD AND CULVERT IMPROVEMENTS
JOB NO. 08-11

Dear Mr. Hooser:

With this letter, the County of Maui, Department of Public Works hereby transmits the Draft Environmental Assessment and Anticipated Finding of No Significant Impact (DEA-AFONSI) for the Proposed Haiku Road and Culvert Improvements situated at Haiku Road right-of-way, as well as TMK Nos. (2) 2-7-003:056(por.), (2) 2-7-017:047(por.), and (2) 2-7-020:009(por.) in the Makawao District on the island of Maui for publication in the next available edition of the Environmental Notice.

Enclosed is a completed OEQC Publication Form, two copies of the DEA-AFONSI, an Adobe Acrobat PDF file of the same, and an electronic copy of the publication form in MS Word. Simultaneous with this letter, we have submitted the summary of the action in a text file by electronic mail to your office.

Should you have any questions, please do not hesitate to contact Colleen Suyama at Munekiyo & Hiraga, Inc. at (808) 244-2015.

Sincerely,

DAVID C. GOODE
Director of Public Works

Enclosures

DG/CS:gq(ED12-711)
S:\ENG\ALL\WYK\CIP\08-11HaikuRdCulvert\OEQCtrans.fromDPW.doc

Agency Action EA
Chapter 343, HRS
Publication Form

Project Name Proposed Haiku Road and Culvert Improvements Draft Environmental Assessment
Island: Maui
District: Makawao
TMK: Haiku Road Right-of-Way; TMK (2) 2-7-003:056(por.); 2-7-017:047(por.); and 2-7-020:009(por.)
Permits: Department of Army Permit, Section 401 Water Quality Certification, Coastal Zone Management Consistency Approval, Stream Channel Alteration Permit, National Pollutant Discharge Elimination System Permit, Community Noise Permit, as applicable, Construction Permits (grading, grubbing)
Proposing/Determination
Agency: County of Maui, Department of Public Works, 200 South High Street, Wailuku, Hawaii 96793
Contact: David Goode, Director, (808) 270-7845
Consultant: Munekiyo & Hiraga, Inc., 305 High Street, Suite 104, Wailuku, Hawaii 96793
Contact: Colleen Suyama, Senior Associate, (808) 244-2015
Status: 30-day comment period
Summary (Provide proposed action and purpose/need in less than 200 words. Please keep the summary brief and on this one page):

In December 2007, a storm caused extensive damage to the existing concrete box culvert drainage system and embankment located along (north) Haiku Road approximately 600 feet east of its intersection with Kokomo Road. The 2007 storm caused a section of the concrete box culvert to break away, as well as the erosion of the adjacent embankment to the north of Haiku Road. The erosion has, in turn, undermined the shoulder and guardrail on the north side of Haiku Road.

To remedy this condition, the County of Maui, Department of Public Works (DPW) proposes to repair the damaged concrete box culvert and eroded embankment. To prevent future damage to the drainageway, protect coastal and downstream waters, and improve public safety, the DPW proposes to construct a new outlet headwall, construct new grated inlet and 18-inch pipe drain, new embankments, an energy dissipator basin and grouted riprap transition, and to install fencing above the dissipator walls, new guard rails and asphalt pavement for the reconstruction of Haiku Road.

The proposed action involves the use of County land and funds. The use of County land and funds are triggers for Chapter 343, Hawaii Revised Statutes (HRS). As such, an Environmental Assessment (EA) is being prepared pursuant to Chapter 343, HRS and Chapter 200 of Title 11, Hawaii Administrative Rules, *Environmental Impact Statement Rules*. This EA documents the project's technical characteristics and environmental impacts, and advances findings and conclusions relative to the impacts of the project.

ALAN M. ARAKAWA
Mayor

DAVID C. GOODE
Director

ROWENA M. DAGDAG-ANDAYA
Deputy Director

Telephone: (808) 270-7745
Fax: (808) 270-7975

COUNTY OF MAUI
DEPARTMENT OF PUBLIC WORKS
ENGINEERING DIVISION
200 SOUTH HIGH STREET
WAILUKU, MAUI, HAWAII 96793

RALPH NAGAMINE, L.S., P.E.
Development Services Administration

CARY YAMASHITA, P.E.
Engineering Division

BRIAN HASHIRO, P.E.
Highways Division

June 25, 2012

Mr. Gary Hooser, Director
Office of Environmental Quality Control
State of Hawaii
235 South Beretania Street, Suite 702
Honolulu, Hawaii 96813

SUBJECT: DRAFT ENVIRONMENTAL ASSESSMENT (EA)
FOR THE PROPOSED HAIKU ROAD AND CULVERT IMPROVEMENTS
JOB NO. 08-11

Dear Mr. Hooser:

With this letter, the County of Maui, Department of Public Works hereby transmits the Draft Environmental Assessment and Anticipated Finding of No Significant Impact (DEA-AFONSI) for the Proposed Haiku Road and Culvert Improvements situated at Haiku Road right-of-way, as well as TMK Nos. (2) 2-7-003:056(por.), (2) 2-7-017:047(por.), and (2) 2-7-020:009(por.) in the Makawao District on the island of Maui for publication in the next available edition of the Environmental Notice.

Enclosed is a completed OEQC Publication Form, two copies of the DEA-AFONSI, an Adobe Acrobat PDF file of the same, and an electronic copy of the publication form in MS Word. Simultaneous with this letter, we have submitted the summary of the action in a text file by electronic mail to your office.

Should you have any questions, please do not hesitate to contact Colleen Suyama at Munekiyo & Hiraga, Inc. at (808) 244-2015.

Sincerely,

DAVID C. GOODE
Director of Public Works

Enclosures

DG/CS:gq(ED12-711)
S:\ENG\ALL\WYK\CIP\08-11HaikuRdCulvert\OEQCtrans.fromDPW.doc

Draft Environmental Assessment

PROPOSED HAIKU ROAD AND CULVERT IMPROVEMENTS MAUI, HAWAII (TMK (2)2-7-003:056(por.); (2)2-7-017:047 (por.) and (2)2-7-020:009 (por.))

Prepared for:

County of Maui,
Department of Public Works

July 2012

Copyright © 2012,
by Munekiyo & Hiraga, Inc.

MUNEKIYO HIRAGA, INC.

CONTENTS

Executive Summary . . . . . Page i

I. PROJECT OVERVIEW . . . . . Page 1

A. PROJECT LOCATION AND LAND OWNERSHIP . . . . . Page 1
B. PROJECT BACKGROUND AND EXISTING CONDITIONS . . . . . Page 5
C. PROPOSED ACTION . . . . . Page 5
D. PROJECT NEED . . . . . Page 9
E. REGULATORY REQUIREMENTS . . . . . Page 9
F. PROJECT FUNDING AND SCHEDULING . . . . . Page 10

II. DESCRIPTION OF THE EXISTING ENVIRONMENT, POTENTIAL IMPACTS AND PROPOSED MITIGATION MEASURES . . . . . Page 11

A. PHYSICAL SETTING . . . . . Page 11
1. Surrounding Land Uses . . . . . Page 11
2. Climate . . . . . Page 12
3. Topography and Soils . . . . . Page 12
4. Flood and Tsunami Conditions . . . . . Page 19
5. Flora and Fauna . . . . . Page 20
6. Historical and Archaeological Resources . . . . . Page 22
7. Cultural Assessment . . . . . Page 23
8. Air and Noise Quality . . . . . Page 29
9. Scenic and Open Space Resources . . . . . Page 29
B. SOCIO-ECONOMIC ENVIRONMENT . . . . . Page 30
1. Population and Demography . . . . . Page 30
2. Labor Force and Economy . . . . . Page 31
C. PUBLIC SERVICES . . . . . Page 32
1. Police and Fire Protection . . . . . Page 32
2. Medical Facilities . . . . . Page 33
3. Solid Waste . . . . . Page 33
4. Recreational Resources . . . . . Page 34
5. Educational Facilities . . . . . Page 34
D. INFRASTRUCTURE . . . . . Page 35
1. Roadways . . . . . Page 35
2. Water System . . . . . Page 36
3. Wastewater System . . . . . Page 36
4. Drainage . . . . . Page 37
5. Electrical, Telephone and Cable Services . . . . . Page 38
E. CUMULATIVE AND SECONDARY IMPACTS . . . . . Page 39

III. RELATIONSHIP TO GOVERNMENTAL PLANS, POLICIES AND CONTROLS . . . . . Page 40

A. STATE LAND USE DISTRICTS . . . . . Page 40
B. CHAPTER 226, HRS, HAWAII STATE PLAN . . . . . Page 40
1. Objectives and Policies of the Hawaii State Plan . . . . . Page 42
C. GENERAL PLAN OF THE COUNTY OF MAUI . . . . . Page 42
D. PAIA-HAIKU COMMUNITY PLAN . . . . . Page 45
E. ZONING . . . . . Page 47
F. COASTAL ZONE MANAGEMENT OBJECTIVES AND POLICIES . . Page 48
1. Recreational Resources . . . . . Page 48
2. Historic Resources . . . . . Page 49
3. Scenic and Open Space Resources . . . . . Page 50
4. Coastal Ecosystems . . . . . Page 51
5. Economic Uses . . . . . Page 52
6. Coastal Hazards . . . . . Page 52
7. Managing Development . . . . . Page 53
8. Public Participation . . . . . Page 54
9. Beach Protection . . . . . Page 54
10. Marine Resources . . . . . Page 55

IV. SUMMARY OF UNAVOIDABLE IMPACT ON THE ENVIRONMENT AND RESOURCES . . . . . Page 57

V. ALTERNATIVES TO THE PROPOSED ACTION . . . . . Page 58

A. PREFERRED ALTERNATIVE . . . . . Page 58
B. NO ACTION ALTERNATIVE . . . . . Page 58
C. DEFERRED ACTION ALTERNATIVE . . . . . Page 58

VI. SIGNIFICANCE CRITERIA ASSESSMENT . . . . . Page 60

VII. LIST OF PERMITS AND APPROVALS . . . . . Page 64

VIII. AGENCIES CONSULTED DURING THE PREPARATION OF THE DRAFT ENVIRONMENTAL ASSESSMENT; LETTERS RECEIVED; AND RESPONSES TO SUBSTANTIVE COMMENTS . . . . . Page 65

IX. REFERENCES . . . . . Page i

K:\DATA\SEY\HaikuRoad\DraftEA\DRAFT EA.rpt.wpd

LIST OF FIGURES

Figure 1. Regional Location Map . . . . . Page 2
Figure 2. Location Map . . . . . Page 3
Figure 3. Project Limits . . . . . Page 4
Figure 4. Site Photographs . . . . . Page 6
Figure 5. Site Plan . . . . . Page 7
Figure 6. Profile Drawing . . . . . Page 8
Figure 7. Soil Associations Map . . . . . Page 14
Figure 8. Soil Classification Map . . . . . Page 15
Figure 9. Agricultural Lands of Importance to the State of Hawaii . . . . . Page 17
Figure 10. Land Study Bureau Classification Map . . . . . Page 18
Figure 11. State Land Use Designations Map . . . . . Page 41
Figure 12. Community Plan Land Use Designations . . . . . Page 46

LIST OF APPENDICES

Appendix A. Site Photographs
Appendix B. Preliminary Development Plans
Appendix C. Geotechnical Consultation Report
Appendix D. Biological Resources Survey
Appendix E. Archaeological Assessment Survey Report
Appendix F. Cultural Interview Summaries

Executive Summary

Project Name:	Proposed Haiku Road and Culvert Improvements
Type of Document:	Draft Environmental Assessment
Legal Authority:	Chapter 343, Hawaii Revised Statutes
Agency Determination:	Anticipated Finding of No Significant Impact (FONSI)
Applicable Environmental Assessment review "Trigger":	Use of County Land and Funds
Location:	Maui Island Haiku, Maui Haiku Road Right-of-Way; TMK Nos. (2)2-7-003:056 (por.); 2-7-017:047 (por.); and 2-7-020:009 (por.)
Landowners:	1. Haiku Road Right-of-Way: County of Maui 2. TMK (2) 2-7-003:056 (por.): A&B Hawaii, Inc. 3. TMK (2) 2-7-017:047 (por.): East Maui Irrigation Co. Ltd. 4. TMK (2) 2-7-020:009 (por.): George M. Fukushima, et al.
Applicant:	County of Maui, Department of Public Works 200 South High Street Wailuku, Hawaii 96793 Contact: David Goode, Director Phone: (808) 270-7835
Approving Agency:	County of Maui, Department of Public Works 200 South High Street Wailuku, Hawaii 96793 Contact: David Goode, Director Phone: (808) 270-7835
Consultant:	Munekiyo & Hiraga, Inc. 305 High Street, Suite 104 Wailuku, Hawaii 96793 Contact: Colleen Suyama, Senior Associate Phone: (808) 244-2015

Project Summary:

In December 2007, a storm caused extensive damage to the existing concrete box culvert drainage system and embankment located along (north) Haiku Road approximately 600 feet east of its intersection with Kokomo Road. The 2007 storm caused a section of the concrete box culvert to break away, as well as eroding the adjacent embankment to the north of Haiku Road. The erosion has, in turn, undermined the shoulder and guardrail on the north side of Haiku Road.

To remedy this condition, the County of Maui, Department of Public Works (DPW) proposes to repair the damaged concrete box culvert and eroded embankment. To prevent future damage to the drainageway, protect coastal and downstream waters, and improve public safety, the DPW proposes to construct a new outlet headwall, construct new grated inlet and 18-inch drainline, new embankments, an energy dissipator basin and grouted riprap transition, and to install fencing above the dissipator walls, new guard rails and asphalt pavement for the reconstruction of Haiku Road.

The proposed action involves the use of County land and funds. The use of County land and funds are triggers for Chapter 343, Hawaii Revised Statutes (HRS). As such, an Environmental Assessment (EA) is being prepared pursuant to Chapter 343, HRS and Chapter 200 of Title 11, Hawaii Administrative Rules, *Environmental Impact Statement Rules*. This EA documents the project's technical characteristics and environmental impacts, and advances findings and conclusions relative to the impacts of the project.

I. PROJECT OVERVIEW

I. PROJECT OVERVIEW

A. PROJECT LOCATION AND LAND OWNERSHIP

The County of Maui, Department of Public Works (DPW) proposes improvements to Haiku Road and drainage culvert within Lilikoi Gulch on an approximately 1-acre portion of land (hereafter referred to as the "project site"). Lilikoi Gulch is a tributary of Kuiaha Gulch leading to the Pacific Ocean, approximately 2.5 miles away from the project site. See **Figure 1**. The project site is located along Haiku Road, approximately 600 feet east of its intersection with Kokomo Road. See **Figure 2**. In addition to the County of Maui's Haiku Road right-of-way, the project site includes undeveloped portions of privately owned lands identified as Tax Map Keys (TMK) (2)2-7-003:056 (por.), 2-7-017:047 (por.), and 2-7-020:009 (por.) (hereinafter referred to as Parcel 56, Parcel 47, and Parcel 9, respectively). See **Figure 3**. Parcel 56 is owned by A&B Hawaii, Ltd; Parcel 47 is owned by East Maui Irrigation Co., Ltd.; and Parcel 9 is owned by George M. Fukushima, et al. Land acquisition for portions of these private properties within the project site will be required by the County of Maui for the project to proceed.

The portion of the Haiku Road right-of-way affected by the project is located within the State Urban District, identified as a roadway on the Paia-Haiku Community Plan Map and zoned Interim District by Maui County. **Table 1**, below, identifies the land use designations of the privately owned parcels.

Table 1. Land Use Designations of Privately Owned Lands

Tax Map Key	State Land Use District	Paia-Haiku Community Plan	County Zoning District
2-7-003:056	Agricultural	Agriculture	Agricultural
2-7-017:047	Urban	Single Family	Interim
2-7-020:009	Urban	Business/Commercial	Urban Reserve
Source: Maui Planning Department, 2012.			

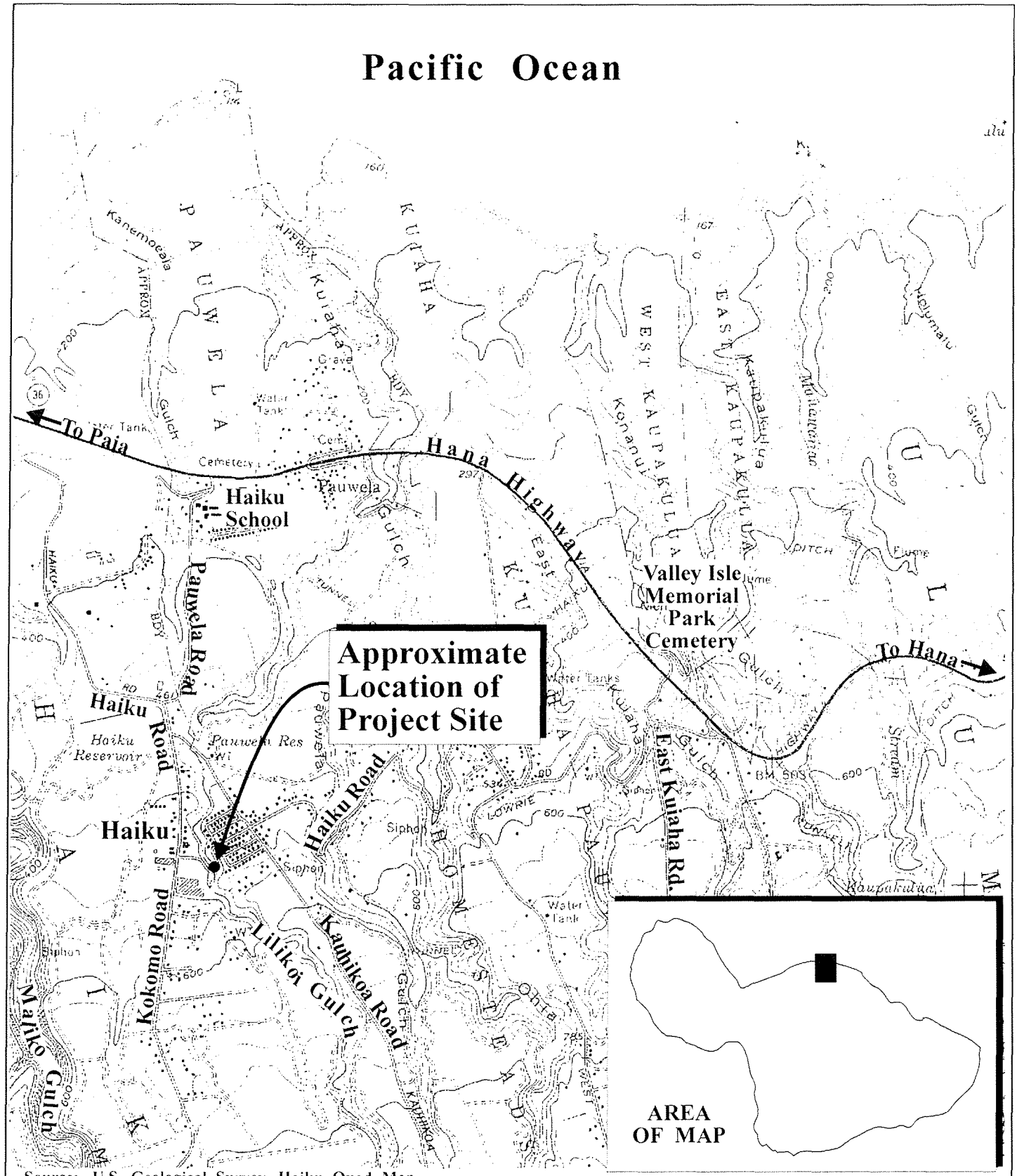

Source: U.S. Geological Survey, Haiku Quad Map

Figure 1

Proposed Haiku Road and Culvert Improvements

Regional Location Map

0 500 1000 2000 Feet

Prepared for: County of Maui, Department of Public Works

MUNEKIYO & HIRAGA, INC.

SEY/HaikuRoad/regional

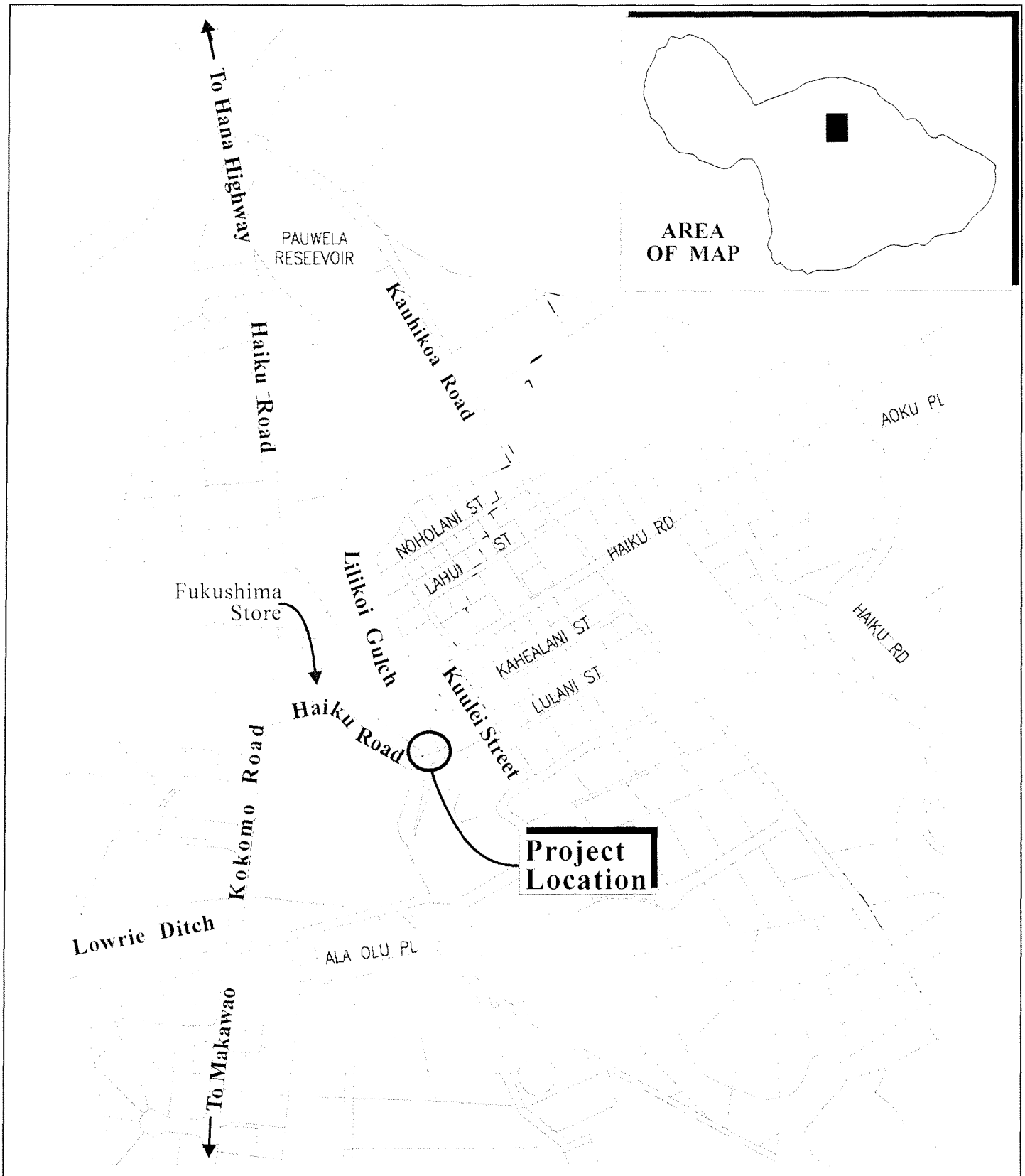

Source: Shimabukuro Endo & Yoshizaki, Inc.

Figure 2

Proposed Haiku Road and Culvert Improvements
Location Map

NOT TO SCALE

MUNEKIYO & HIRAGA, INC.

Prepared for: County of Maui, Department of Public Works

SEY/HaikuRoad/locationmap

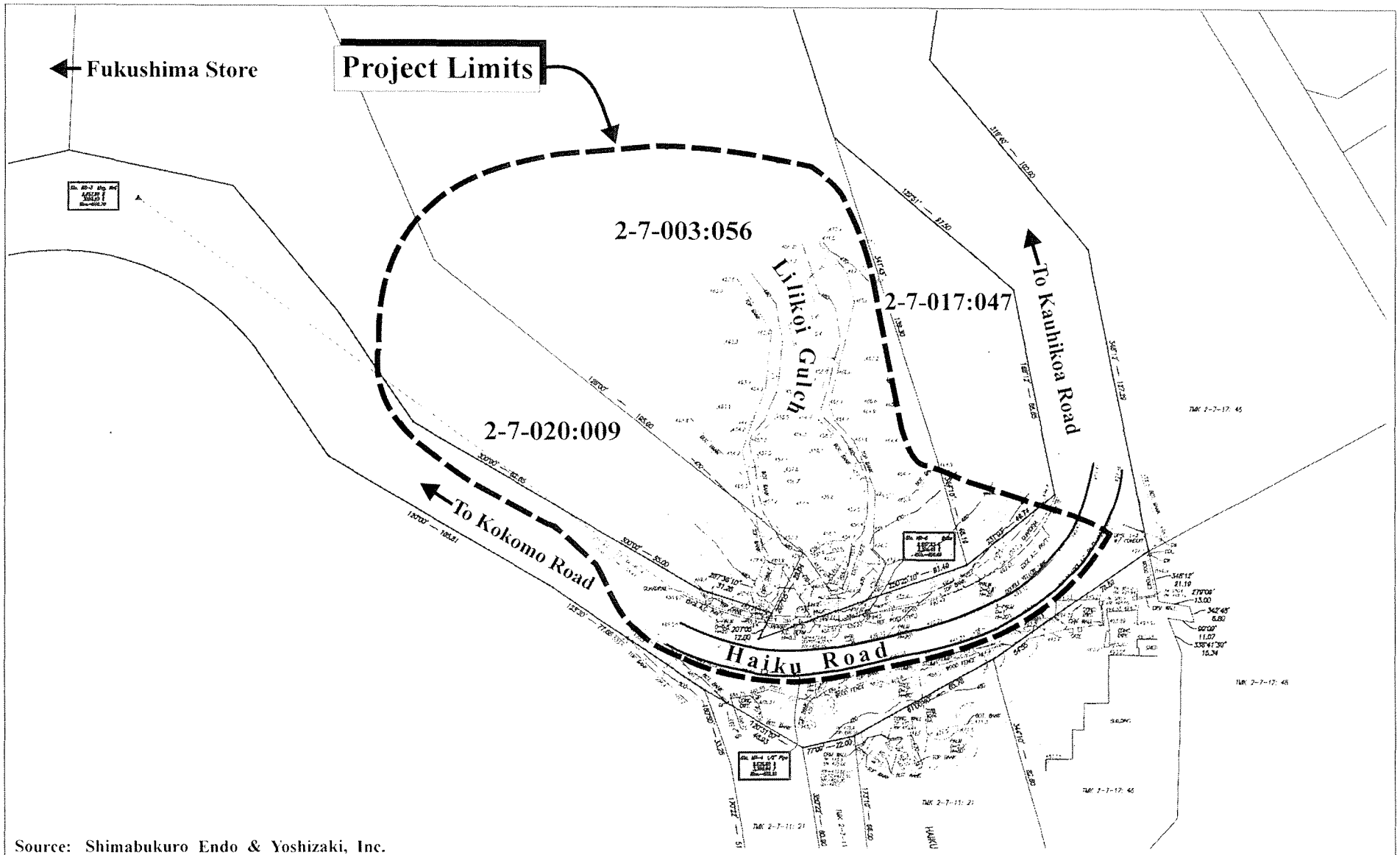

Source: Shimabukuro Endo & Yoshizaki, Inc.

Figure 3 Proposed Haiku Road and Culvert Improvements

Project Limits

NOT TO SCALE

Prepared for: County of Maui, Department of Public Works

MUNEKIYO & HIRAGA, INC.

SEY/HaikuRoad/ProjectLimits

B. PROJECT BACKGROUND AND EXISTING CONDITIONS

In December 2007, a storm caused extensive damage to the existing concrete box culvert drainage system and embankment located along (north) Haiku Road in Haiku, Maui. The 2007 storm damaged the concrete box culvert causing a portion of the culvert to break away and causing the erosion of the adjacent embankment on the north side of the roadway. The erosion has, in turn, undermined the shoulder and guardrail on the north side of Haiku Road. See **Figure 4** and **Appendix "A"**. To mitigate this condition, the DPW proposes to repair the concrete box culvert and eroded embankment. To prevent future damage to the drainageway, protect the water quality of coastal and downstream waters, and improve public safety, the DPW proposes to construct a new outlet headwall, a new grated inlet and 18-inch drainline, new embankments, an energy dissipator basin, and grouted riprap transition, to install fencing above the dissipator walls, and to install new guard rails and asphalt pavement to Haiku Road.

The improvements will enhance the County of Maui's ability to provide adequate drainage under Haiku Road and through Lilikoi Gulch and prevent future erosion of the embankment below Haiku Road from stormwater runoff during heavy rains. By improving drainage conditions in the area, the project will lessen the likelihood of road closures due to stormwater runoff from heavy rains in the future. Further, the construction of the energy dissipator basin will prevent erosion of the downstream properties within Lilikoi Gulch, specifically the embankments adjacent to Haiku Road, and will also reduce further degradation of water quality to downstream water from sediments due to erosion.

C. PROPOSED ACTION

Land acquisition by the County of Maui of the affected portions of Parcel 56, Parcel 47, and Parcel 9 will be required for the proposed project. Refer to **Figure 3**. The proposed project involves grading work to repair the existing embankment, the construction of new embankments, the reconstruction of a portion of the existing 6.0-ft. wide by 6.0-ft. high reinforced concrete (R.C.) box culvert, construction of an outlet headwall, construction of a grated inlet and 18-inch drainline, construction of a 21-ft.-wide by 72-ft.-long energy dissipator basin and 26-ft.-long grouted riprap transition, installation of fencing, and guard rails along Haiku Road and pavement reconstruction. See **Figure 5** and **Figure 6**.

The preliminary development plans for the project are presented in **Appendix "B"**.

Remnant of Concrete Box Culvert in Lilikoi Gulch

Hanging Guard Rail at Eroded Embankment on Haiku Road

Source: Munekiyo & Hiraga, Inc.

Figure 4 Proposed Haiku Road and Culvert Improvements
Site Photographs

NOT TO SCALE

Prepared for: County of Maui, Department of Public Works

MUNEKIYO & HIRAGA, INC.

SEY/HaikuRoad/photos

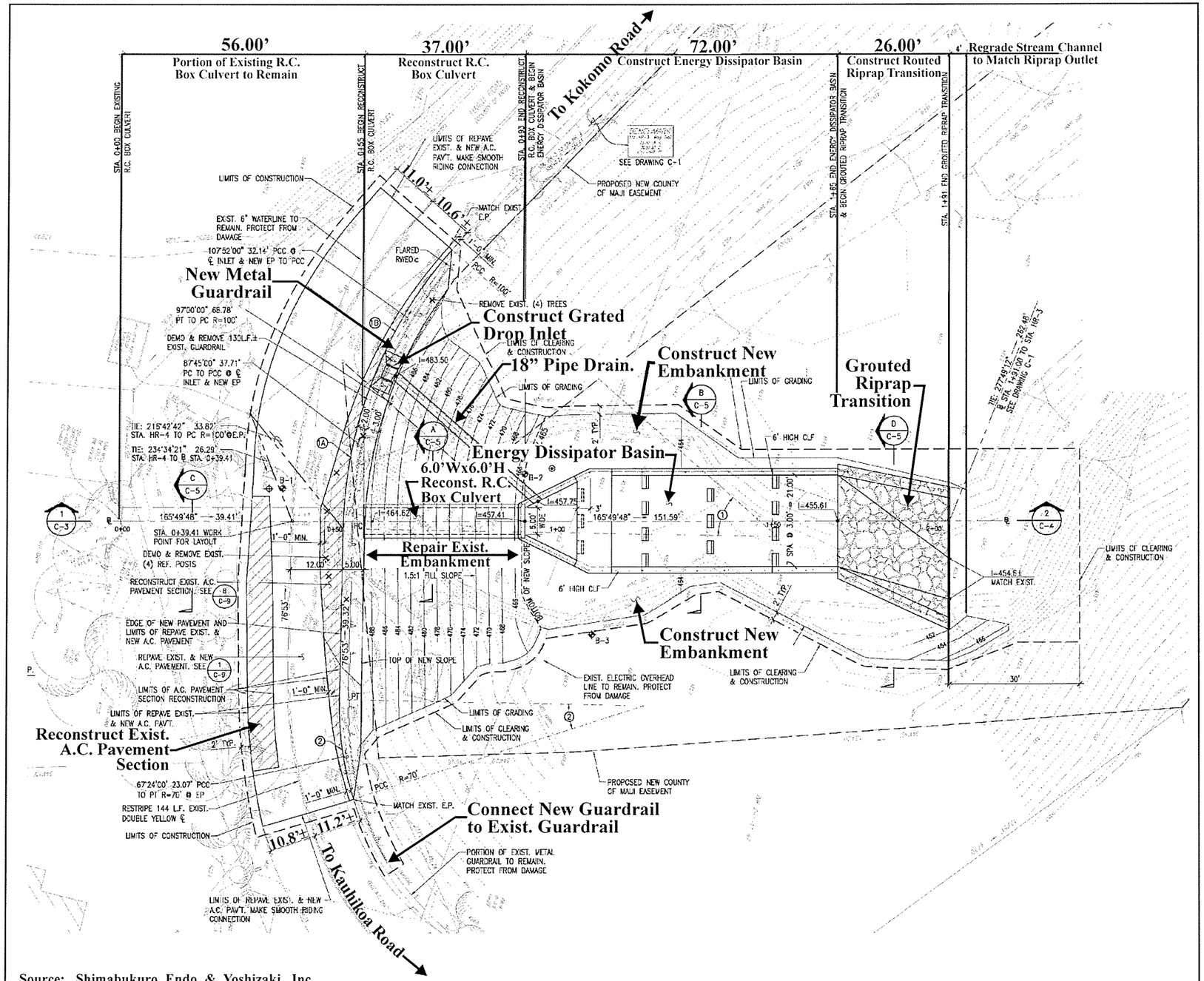

Source: Shimabukuro Endo & Yoshizaki, Inc.

Figure 5 Proposed Haiku Road and Culvert Improvements

Site Plan

NOT TO SCALE

MUNEKIYO & HIRAGA, INC.

Prepared for: County of Maui, Department of Public Works

SEY/HaikuRoad/siteplan

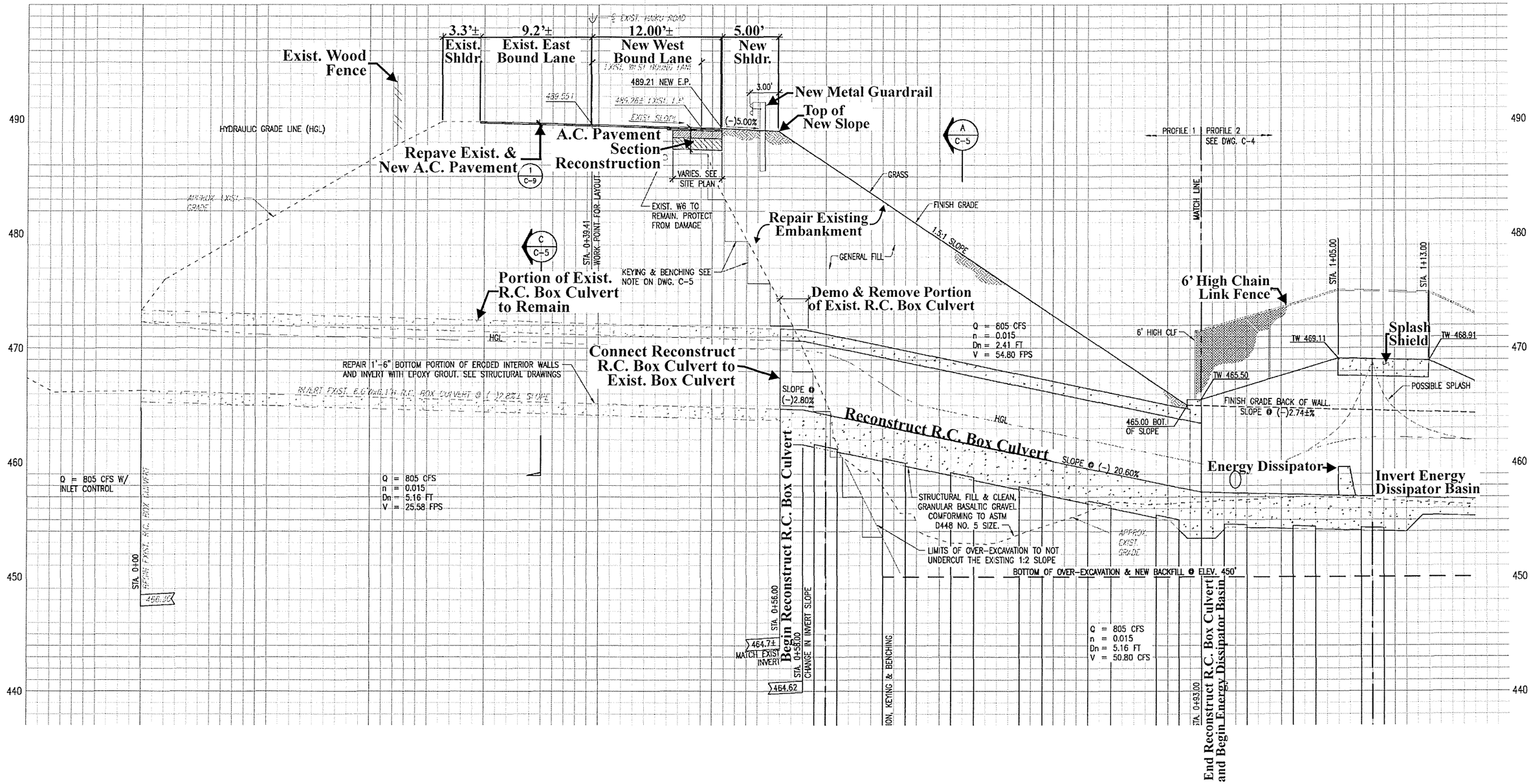

Source: Shimabukuro Endo & Yoshizaki, Inc.

Figure 6

Proposed Haiku Road and Culvert Improvements

Profile Drawing

NOT TO SCALE

MUNEKIYO & HIRAGA, INC.

Prepared for: County of Maui, Department of Public Works

SEY/HaikuRoad/profiledrawing

D. PROJECT NEED

The proposed reconstructed drainage culvert and related new improvements are intended to repair the roadway and improve drainage under Haiku Road and through Lilikoi Gulch. Refer to site photos in **Figure 4** and **Appendix "A"**. Further, the proposed project will prevent future erosion of the embankment below Haiku Road from stormwater runoff and lessen the likelihood of road closures due to stormwater runoff from heavy rains. The construction of the energy dissipator basin is a Best Management Practices (BMPs) mitigation measure and will prevent erosion of the downstream properties within Lilikoi Gulch and further degradation of water quality downstream from sediments due to erosion.

E. REGULATORY REQUIREMENTS

The proposed project involves the use of County lands and funds. The use of County lands and funds is a trigger for an environmental assessment pursuant to Chapter 343, Hawaii Revised Statutes (HRS). The proposed improvements to the existing facilities are beyond "repair and maintenance" work, as the project will involve the construction of additional drainage structures and the extension of improvements beyond the existing culvert drainage system that will require land acquisition from adjacent properties. An Environmental Assessment (EA) is, therefore, being prepared pursuant to Chapter 200 of Title 11, Department of Health Administrative Rules, Environmental Impact Statement Rules. Accordingly, this document addresses the project's technical characteristics, environmental impacts and alternatives, as well as advances findings and conclusions relative to the significance of the project. The DPW will serve as the Approving Agency for the EA.

Additionally, the proposed project transports stormwater runoff through Lilikoi Gulch which is a tributary of Kuiaha Gulch which empties into the Pacific Ocean. A Department of the Army (DA) Permit pursuant to Section 404 of the Clean Water Act will be required. An application for a DA permit will be submitted to the DA by the DPW for processing. In addition, an application for Section 401 Water Quality Certification will be filed with the State of Hawaii, Department of Health, Clean Water Branch and an application for Coastal Zone Management Consistency will be filed with the State of Hawaii, Office of Planning. An application for Stream Channel Alteration Permit will also be filed for the project with the State of Hawaii, Commission on Water Resource Management. The proposed project will comply with Section 7 of the Endangered Species Act, the Manguson-Stevens Fishery Conservation and Management Act, and Section 106 of the National Historic Preservation Act, as applicable.

F. PROJECT FUNDING AND SCHEDULING

The estimated cost of the proposed project is $1.4 million. Assuming all necessary approvals are obtained, construction is projected to begin in May 2013, with completion estimated in the fourth quarter of 2013.

II. DESCRIPTION OF THE EXISTING ENVIRONMENT, POTENTIAL IMPACTS AND PROPOSED MITIGATION MEASURES

II. DESCRIPTION OF THE EXISTING ENVIRONMENT, POTENTIAL IMPACTS AND PROPOSED MITIGATION MEASURES

A. PHYSICAL SETTING

1. Surrounding Land Uses

a. Existing Conditions

The proposed project site is located in Haiku, Maui. The community of Haiku, in contrast to the urban communities of Kahului and Wailuku on Maui, is more rural in character with residential growth in the region having been largely developed by agricultural subdivisions. The region also offers small neighborhood businesses, such as those located in Kuiaha and Pauwela that provide residents with limited commercial services. Such services are often occupied within renovated facilities that were once home to pineapple canneries. Agriculture continues to characterize this region. Agricultural activities in the region include nursery operations and diversified agriculture (County of Maui, 2012).

The project site is located within the Haiku Road right-of-way and portions of adjacent privately owned lands within Lilikoi Gulch, an existing natural drainageway that passes under Haiku Road and is a tributary of Kuiaha Gulch which eventually exits into the Pacific Ocean approximately 2.5 miles north of the project site. In the immediate vicinity of the project site are vacant agricultural and urban lands. Fukushima Store, a small retail store, lies approximately 400 feet to the west of the project site. Haiku Road provides access to and from residential and neighborhood business areas surrounding the project site.

b. Potential Impacts and Proposed Mitigation Measures

The proposed project is not anticipated to adversely impact surrounding land uses in the vicinity of the project site. The proposed project will improve drainage conditions in the area and prevent future erosion of the embankment

below Haiku Road from stormwater runoff due to heavy rains. Future closures of the roadway due to stormwater runoff would also be less likely as drainage conditions will be improved with the construction of the project. Also, BMPs such as the construction of an energy dissipator basin will prevent erosion of the embankments and reduce sediments that would adversely impact water quality downstream.

2. Climate

a. Existing Conditions

Hawaii's tropical location results in uniform weather conditions throughout the year. Climatic conditions on Maui are characterized by mild and consistent year round temperatures, moderate humidity and steady northeasterly tradewinds. Variations in Maui's weather are attributable to regional topographic and climatic conditions.

The nearest weather measuring station is at the Haleakala Ranger Station which is located approximately 33 miles away from the project site. In 2010 the average temperature ranged between a low of 48.7 degrees Fahrenheit to a high of 59.5 degrees Fahrenheit with an average annual temperature of 54.6 degrees. August was the warmest month while February was the coldest. The 2010 annual average rainfall was 25.32 inches with October the wettest month and June the driest (County of Maui, 2012).

b. Potential Impacts and Proposed Mitigation Measures

The proposed project will not have an adverse effect on local climatic conditions. Further, the proposed project is below Haiku Road at the bottom of Lilikoi Gulch and is not anticipated to alter wind patterns in the area.

3. Topography and Soils

a. Existing Conditions

Topography in the region ranges from a rocky coastline to the moderately steep slopes and gulches of Haleakala. The project site is located in Lilikoi Gulch, which according to the Geotechnical Consultation report prepared for the project by Pacific Geotechnical Engineers, Inc., forms a northward

trending, steep, though relatively shallow, V-shaped channel. See **Appendix "C"**. According to the report, the areas above the walls of Lilikoi Gulch, to the east and west, form plateau-like surfaces consisting of highly to completely weathered volcanic ash underlain by basaltic lava flows that have weathered to a soft to very soft rock, termed saprolite. On the western side of the project site, saprolite is exposed in road cuts, and the volcanic ash is overlain by fill composed of silty soil with fragments of saprolite. The floor of Lilikoi Gulch is covered with soft and loose younger alluvium deposits with cobbles, boulders, trash and debris at surface underlain by firmer alluvium, saprolite and highly weathered basalt. Refer to **Appendix "C"**.

According to the U.S. Department of Agriculture, Soil Conservation Service, underlying the project site are soils belonging to the Pauwela-Haiku Association. See **Figure 7**. The Pauwela-Haiku Association is characterized by well drained, fine textured soils commonly found on low uplands . These soils are gently sloping to moderately steep. The Pauwela-Haiku Association makes up about 3 percent of the island.

According to the Soil Survey of Islands of Kauai, Oahu, Maui, Molokai and Lanai, State of Hawaii, prepared by the U.S. Soil Conservation Service, the project site contains underlying soil from the Rough Broken Land (rRR), Haiku clay 3 to 7 percent slopes (HbB) and Haiku clay 7 to 15 percent slopes (HbC) classifications. See **Figure 8**. These types of soil are very steep land broken by numerous intermittent drainage channels and occur in gulches and on mountainsides. Permeability and runoff are rapid and subject to geologic erosion. In general, the soils are variable and in most places some weathered rock fragments are mixed with soil material. Small areas of rock outcroppings, stones and soil slips are common. Elevations range from near sea level to about 8,000 feet with slopes of 40 to 70 percent. This land type is primarily used as watershed and wildlife habitat.

The State Department of Agriculture (DOA) has established three (3) categories of Agricultural Lands of Importance to the State of Hawaii (ALISH). The ALISH system classifies lands into "Prime", "Unique", and "Other Important Agricultural Land". The remaining lands are "Unclassified". Utilizing modern farming methods, "Prime" agricultural

KEY

1. Pulehu-Ewa-Jaucas Association
2. Waiakoa-Keahua-Molokai Association
3. Honolua-Olelo Association
4. Rock Land-Rough Mountainous Land Association
5. Puu Pa-Kula-Pane Association
6. Hydrandepts-Tropaquods Association
7. Hana-Makaalae-Kailua Association
8. Pauwela-Haiku Association
9. Laumaia-Kaipoipoi-Olinda Association
10. Keawakapu-Makena Association
11. Kamaole-Oanapuka Association

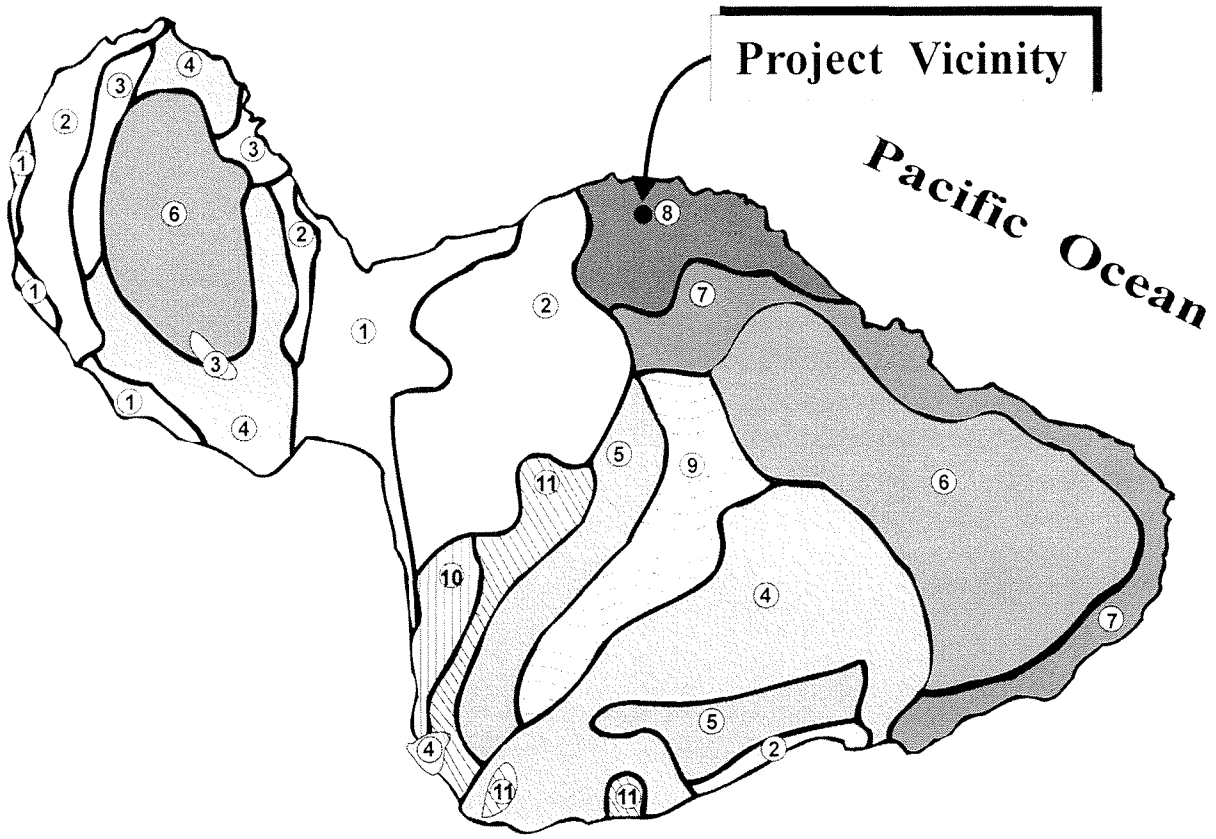

Source: USDA, Soil Conservation Service

Figure 7

Proposed Haiku Road and Culvert Improvements

Soil Associations Map

NOT TO SCALE

Prepared for: County of Maui, Department of Public Works

MUNEKIYO & HIRAGA, INC.

SEY\HaikuRoad\Soil Association Map

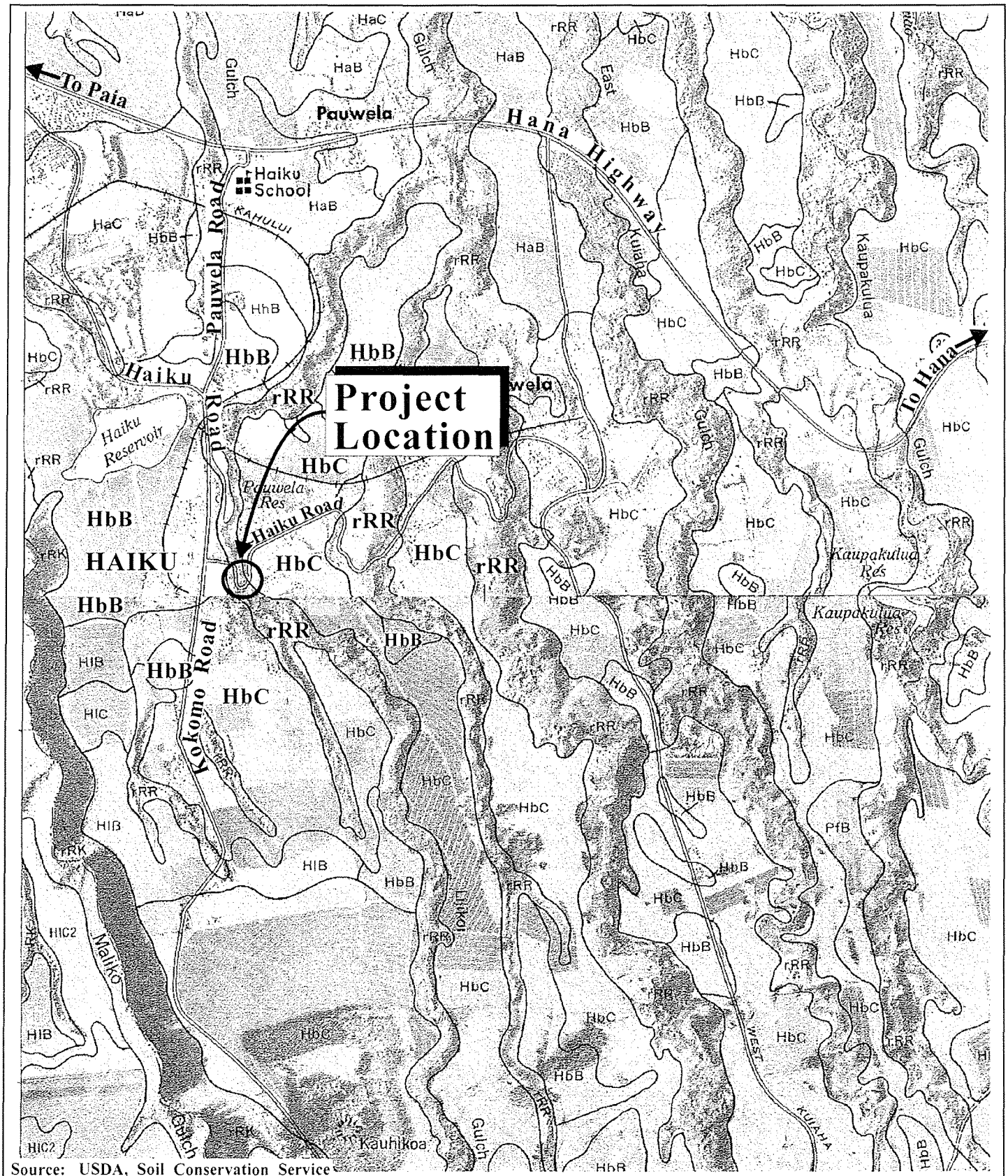

Source: USDA, Soil Conservation Service

Figure 8

Proposed Haiku Road and Culvert Improvements

Soil Classification Map

NOT TO SCALE

MUNEKIYO & HIRAGA, INC.

Prepared for: County of Maui, Department of Public Works

SEY/HaikuRoad/SoilClass

lands have the soil quality, growing season, and moisture supply needed to produce sustained crop yields economically, while "Unique" agricultural lands possess a combination of soil quality, location, growing season, and moisture supply currently used to produce sustained high yields of a specific crop. "Other Important Agricultural Land" includes those which have not been rated as "Prime" or "Unique". According to the DOA's ALISH rating system, the project site is located on lands that have been defined as "Unclassified". See **Figure 9**.

In addition, the University of Hawaii, Land Study Bureau (LSB) classifies productivity characteristics on a scale of "A" through "E", with lands designated as "A" reflecting the highest productivity and "E" representing lands with the lowest productivity. These letters are followed by numbers which further classify the soil types and convey information such as texture, drainage, and stoniness (Land Study Bureau, 1967).

Land underlying the project site is located within Lilikoi Gulch and has been classified by the LSB as "E96", the lowest productivity rating. See **Figure 10**. These lands generally are well drained and primarily used for grazing and forest. The soil is moderately fine to medium. However, the project site is primarily a drainageway and there are no agricultural uses within the gulch.

b. <u>Potential Impacts and Proposed Mitigation Measures</u>

During the geotechnical study conducted by Pacific Geotechnical Engineers, Inc., weak and compressible younger alluvial deposits were encountered in the drainage channel. Due to the potentially large amounts of fill needed to re-build the embankment, potentially large amounts of settlement on the order of a foot or so may develop between the repaired and existing sections of the concrete box culvert. To reduce the amount of settlement and to provide for a more uniform foundation support, the Geotechnical consultant recommended that the box culvert repair section be founded on deep foundations consisting of drilled, cast-in place reinforced concrete shafts. It is also recommended that the softer younger alluvial soil be over excavated to firmer alluvial deposits or saprolite, and replaced with properly compacted structural fill to reduce the amount of embankment settlements. Refer to **Appendix "C"**.

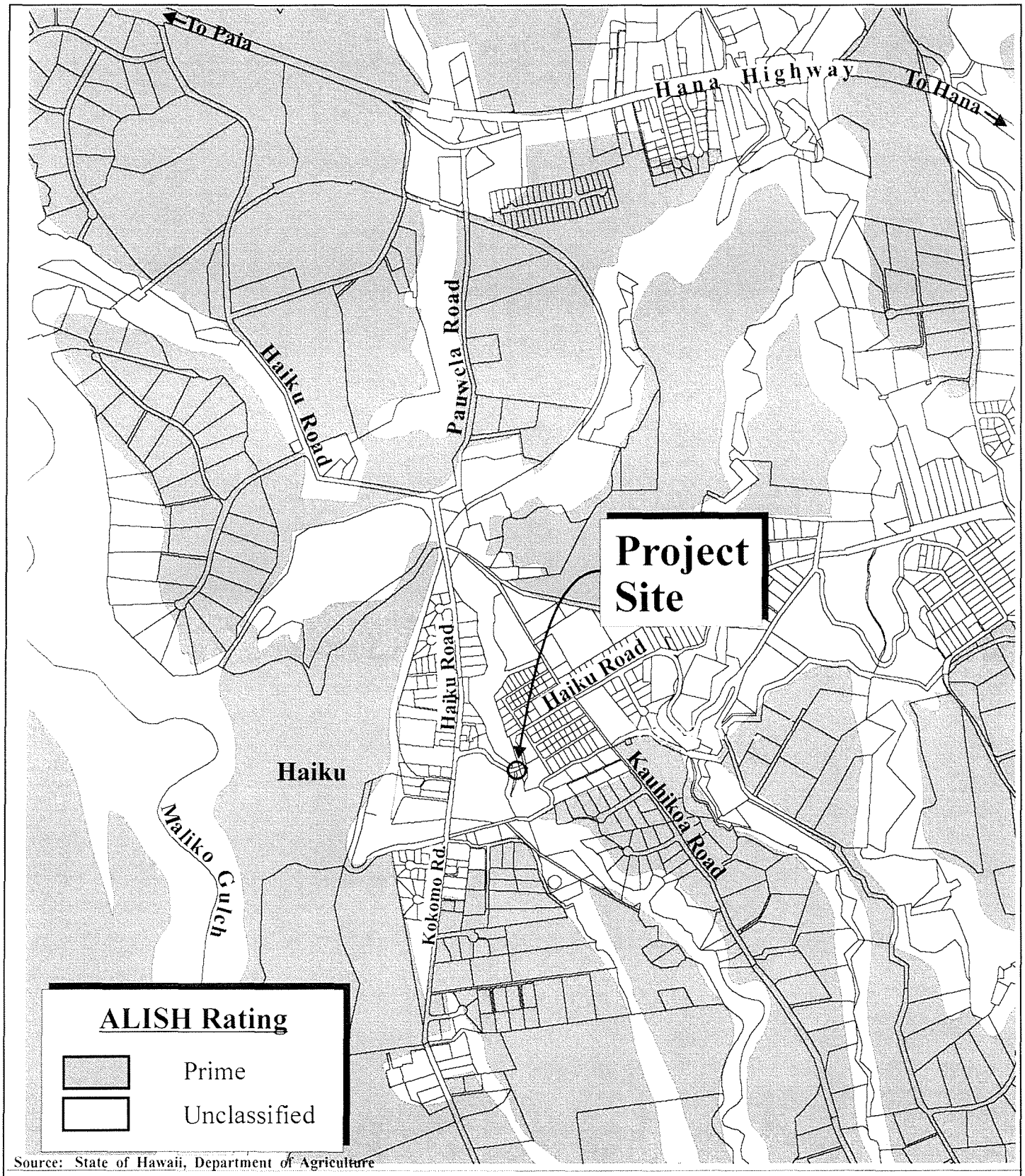

Source: State of Hawaii, Department of Agriculture

Figure 9

Proposed Haiku Road and Culvert Improvements

Agricultural Lands of Importance to the State of Hawaii

NOT TO SCALE

Prepared for: County of Maui, Department of Public Works

MUNEKIYO & HIRAGA, INC.

SEY/HaikuRoad/ALISH

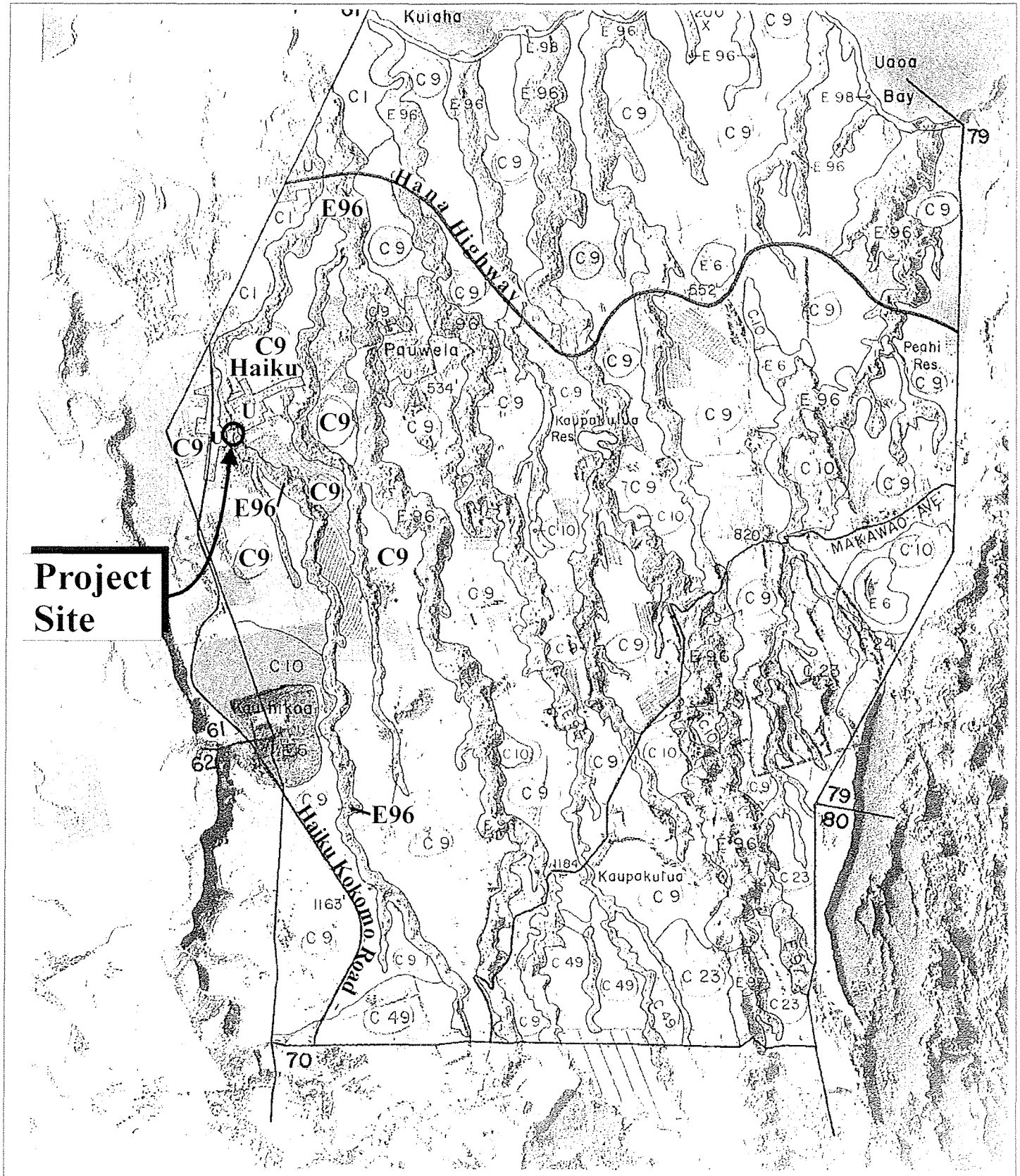

Source: University of Hawaii, Land Study Bureau

Figure 10 Proposed Haiku Road and Culvert Improvements

Land Study Bureau Classification Map

NOT TO SCALE

Prepared for: County of Maui, Department of Public Works

MUNEKIYO & HIRAGA, INC.

SEY:HaikuRoad:landstudybureau

The study further cautions that excavation near the base of the existing embankment may require temporary shoring of the existing box culvert to reduce the potential for undermining the existing culvert and causing potential instability of the existing roadway embankment. Also, temporary relocation of an existing water main under the west bound lane of Haiku Road and an existing overhead electrical line may be needed to reduce potential damage to these lines during construction.

The presence of a scour pond at the discharge end of the existing culvert indicates a high potential for scour to develop in the channel. It is recommended that the culvert repairs include suitable scour protection, as such the dissipator basin and riprap transition is proposed.

The groundwater table at the project site is relatively shallow. As such, excavation needed for the repairs may extend below the groundwater table and dewatering will likely be needed to properly prepare the subgrade for the embankment and culvert repairs. A temporary diversion or bypass for the culvert should be provided to keep water out of the excavation during the site and foundation preparation work. The subgrade work will also require a treatment program in which the weak and compressible younger alluvium would be over excavated down to firmer material and replaced with properly compacted structural fill.

Steep topography and the low agricultural productivity rating of Lilikoi Gulch also limits the use of the project site for agricultural purposes. The proposed improvements are not anticipated to adversely affect agricultural resources. The proposed project is designed to prevent future erosion in the vicinity of the drainage system and Haiku Road resulting from stormwater runoff during heavy rains.

4. Flood and Tsunami Conditions

a. Existing Conditions

The project site is located within an existing drainageway that is identified as Lilikoi Gulch. An unnamed stream passes under Haiku Road and through the existing culvert. This unnamed stream is not listed as a perennial stream (Commission on Water Resources, 1990). While the Federal Emergency

Management Agency (FEMA) has not issued a Flood Insurance Rate Map (FIRM) for the area in the vicinity of the project site, FEMA does indicate that the location does not lie within any special flood zones. In addition, the project site is not located within a tsunami evacuation zone.

Over the years, at the outlet of the box culvert stormwater, runoff scoured the gulch floor, eroded the subgrade under the outlet portion of the box culvert and eroded the roadside embankment. During the 2007 storm, the combined erosion of the subgrade at the outlet and erosion of the roadside embankment along with the weight of the stormwater and debris flowing through the culvert caused about 15 feet of the outlet portion of the concrete culvert to break away.

b. Potential Impacts and Proposed Mitigation Measures

The intent of the proposed project is to prevent future damage to the drainageway, improve public safety, protect water quality downstream, and maintain the reliability of Haiku Road and the drainage system. The proposed improvements to the existing drainage culvert will repair the damage caused by the 2007 storm. The proposed improvements, including an energy dissipator basin and grouted riprap transition, as well as fencing, guardrails and asphalt pavement, are anticipated to prevent future damage to the drainageway, improve public safety, and prevent future road closures of Haiku Road and protect water quality by preventing erosion of the embankments and sediments from entering downstream waters.

5. Flora and Fauna

a. Existing Conditions

A Biological Resources Survey was conducted by Robert W. Hobdy on the project site. See **Appendix "D"**. According to the survey, the vegetation in the gulch bottom consists of a dense windward, lowland forest made up primarily of large non-native species with an understory of large vines and shade-loving shrubs, herbs, and ferns. A total of 48 plant species were recorded of which 47 were widespread non-native species. The most common large shade trees were the African tulip tree (*Spathodea campanulata*) and the Chinese banyan (*Ficus microcarpa*). A large

arborescent vine, golden pothos (*Epipremnum pinnatum*) and the widespread fern (*Christella parasitica*) and one (1) indigenous vine *ka`e`e* (*Mucuna gigantea*) were found. No endangered or threatened plant species were found, nor were any seen that are candidates for such status.

The fauna survey observed two (2) mammal species, the domestic dog (*Canis familiaris*) and roof rat (*Rattus rattus*). Other mammals that probably utilize the area but were not seen would include mice (*Mus domesticus*), mongoose (*Herpestes auropunctatus*), and cat (*Felis catus*). A special effort was made to look for the endangered Hawaiian hoary bat. No bats or bat activity were observed or detected using a bat detection device.

Birdlife was moderate in both species and numbers. Seven (7) species of non-native birds were observed, with the most common the zebra dove (*Geopelia striata*). The project site is not suitable for Hawaii's native forest birds which are found in native forest habitats at higher elevations. Also, the threatened Newells shearwater (*Puffinus newelli*) and the endangered Hawaiian petrel (*Pterodroma sandwichensis*) are found on high mountain ridges and not at the project site.

Insect life was rather sparse in species observed with just five (5) species recorded. Three (3) of the species were found to be common, the Asian spiny-backed spider (*Gasteracantha mammosa*), the Argentine ant (*Linepithema humile*) and the Forest day mosquito (*Aedes albopictus*). No native, threatened, or endangered species of insects were observed.

b. <u>Potential Impacts and Proposed Mitigation Measures</u>

No known or identified native, threatened or endangered species of flora, fauna, avifauna, or insects and their habitat were observed within the project site. The proposed improvements are not expected to have a significant adverse effect on any flora or fauna resources and no mitigation measures are deemed necessary.

6. Historical and Archaeological Resources

a. Existing Conditions

An archaeological assessment of the project site was conducted by Xamanek Researches, LLC in March 2012. See **Appendix "E "**. The assessment involved historic background research and a 100 percent pedestrian surface survey. Subsurface testing was not undertaken during the survey because of safety considerations and the lack of soil deposits in testable areas. The archaeological assessment report noted that no significant material culture remains were located during the course of the archaeological assessment. It was determined that portions of the project area had been previously impacted by earthmoving activities associated with the construction of Haiku Road and its subsequent repair in the 1980's. Inspection of the eroded and exposed concrete culvert under Haiku Road strongly suggested that it is an existing modern feature.

b. Potential Impacts and Proposed Mitigation Measures

The archaeological assessment of the project site revealed that there were no significant material culture remains within the project site. Given that there were no cultural resources located during the survey, the archaeological assessment report determined that there are no significance assessments to be made. However, the report noted that precautionary archaeological monitoring may be warranted for future work, given the presence of relatively thick vegetation in the area. Refer to **Appendix "E"**.

It is noted that in the event that a discovery of significant cultural materials and/or burials is made during construction of the subject project, all work in the immediate area of the find will cease and the State Historic Preservation Division (SHPD) will be notified to discuss mitigation measures, in accordance with Chapter 6E, Hawaii Revised Statutes.

7. Cultural Assessment

a. Existing Conditions

(i) Geopolitical Organization

Prior to Western contact in Hawaii, land was divided into *moku*, or districts. Each of these *moku* was further subdivided into units called *ahupuaa.* Ideally, each *ahupuaa* was self-sufficient, running from *mauka*, the mountain, to *makai*, the ocean (MacKenzie, 1991). These divisions served as both cultural and settlement systems as traditional Hawaiian life was tied intimately to the land. Hunting, gathering, cultivation, and habitation took place within three (3) zones which characterized the *ahupuaa*: the *Mauka* Zone, the Agricultural Zone, and the Coastal Zone. The *Mauka* Zone provided access to a variety of trees, plants, and herbs for various needs, customs and practices. Planting of yams, sweet potato, sugar cane, taro, and other foods took place in the Agricultural Zone, where gradual slopes of land allowed terraces to be constructed for more efficient irrigation. The Coastal Zone and low-lying areas were where most of the *kauhale*, group of houses, were found, along with temples, fishing shrines, and fishponds (Minerbi, 1993).

Western contact brought changes to the Hawaiian land system with the introduction of private ownership of land, a concept foreign to the Native Hawaiians. A Board of Land Commissioners was established in 1845 to uphold or reject all private land claims of both foreigners and Hawaiians. The Commission adopted rules pertaining to the proof of claims, right of tenants, and commutation to the government in attempts to achieve the goal of totally partitioning undivided lands. All lands not claimed by February 1848 were to be forfeited to the government (MacKenzie, 1991).

Following the enactment of these rules, the *Mahele* division of 1848 divided all lands of Hawaii between the king and chiefs. Two (2) years later, the *Kuleana* act completed the *Mahele* process by authorizing the Land Commission to award fee simple titles to native tenants for their land. These *kuleana* parcels, also known as Land

Commission Awards (LCA), were generally among the richest and most fertile in the islands and came from the king, government, or chief's land. All claims and awards were numbered and recorded in the *Mahele* Book (MacKenzie, 1991). In addition, government lands were sold as "Royal Patent Grants" or "Grants" in order to meet the increasing costs of government. These grants differed from LCAs, as it was not necessary for the recipients to obtain an award for their land from the Land Commission (Chinen, 1958).

(ii) Historical Overview

The project site is located in the *ahupuaa* of Hamakualoa.

The Hamakualoa region was traditionally associated with the gods Kanaloa and Kane, and contained many small gulches, springs, and streams. The gulches in this region helped to support the *loi*, or taro patches, that ascended with the stream bed. The presence of many *ahupuaa* along this coast suggests that this area held a considerable population. The soil in this region was excellent for yielding sweet potato, yams, bananas, and other crops, while the nearby bays were excellent for fishing.

Prior to the arrival of Capt. Cook on the islands, there was fierce competition between the chiefs of Hawaii island and the alii nui of Maui. In the late 1700's, Kalaniopuu, an *alii* of Hawaii island, invaded the Hamakualoa region. He was defeated there by Kahekili, an *alii* of Maui, but ventured back to the area several more times. As a result, the Hamakualoa region became the site of many battles.

(iii) Traditional and Customary Rights

The traditional and customary rights of Native Hawaiians can be broken down into access rights, gathering rights, burial rights, and religious rights.

Access

Native Hawaiians generally share the same access rights as the general public. However, they have the unique access rights to *kuleana* parcels and between *ahupuaa*. Access to *kuleana* parcels may involve access via ancient trails or expanded access not limited to any route. Additionally, the *Kuleana* Act granted unobstructed access within the *ahupuaa* to obtain items necessary to make the *kuleana* parcel productive. Access rights between *ahupuaa* involve access to ancient or well established trails (MacKenzie, 1991).

Gathering

In terms of gathering rights, the Hawaii Supreme Court has upheld gathering rights within an *ahupuaa* for firewood, house-timber, *aho* cord, thatch, and *ki*-leaf under three (3) conditions. The tenant must physically reside within the *ahupuaa*, the right to gather can only be exercised upon undeveloped lands within the *ahupuaa,* and the right must be exercised only for the purpose of practicing Native Hawaiian customs and traditions (MacKenzie, 1991).

Burial

According to traditional Hawaiian burial beliefs, following death, the *uhane,* or spirit, must remain near *na iwi*, or bones. Burial sites are chosen by Hawaiians for symbolic purposes in places for safekeeping. Often, bones were hidden in caves, cliffs, sand dunes, or deposited in the ocean. Today, federal and state laws protect both unmarked and marked burial sites. Island Burial Councils assist the State Historic Preservation Division (SHPD) with inventory and identification of unmarked Hawaiian burial sites and determine the preservation or relocation of native Hawaiian burial sites (MacKenzie, 1991).

Religious

Hawaiian religion and beliefs were intimately tied to the land. While some practices and traditions were lost over the years, basic Hawaiian

religious concepts remain. The terms *"aloha aina,"* love the land and *"malama aina,"* care for and protect the land, convey the unity of humans, nature, and the gods in Hawaiian philosophy (Minerbi, 1993). Furthermore, Hawaiians honored and worshiped *aumakua,* deities, and *akua*, gods. There were numerous *akua* of farming, fishing, tapa making, dancing, sports, and any other activity of Hawaiian life. The concept of *mana* or sacred attachment to places, people, or things also remains as a significant aspect of Hawaiian religion (MacKenzie, 1991).

(iv) Cultural Interviews

Gregorysenn Kauhi

Gregorysenn Kauhi is a native Hawaiian born in Wailuku when his mother came for a visit. He was raised in Waimanalo on Oahu. He has lived in Haiku at his Kokomo Road residence for the past 28 years. Mr. Kauhi is not aware of any traditional or customary use of the project area.

When Mr. Kauhi moved to Haiku, the country atmosphere reminded him of his home in Waimanalo. Haiku has the same characteristics as Waimanalo in the 1960s and 1970s. He misses the pineapple fields that are gone since Maui Land & Pineapple Company discontinued its fresh fruit business. The area across from his home once had pineapple fields and is now used for cattle pasturage.

Mr. Kauhi voiced no concerns regarding the proposed Haiku Road and culvert improvements.

See **Appendix "F"**.

Dennis Doi

Dennis Doi was born on November 25, 1950 to Masaaki and Masuyo Doi. The Doi Family was one (1) of about ten (10) or so families who grew pineapple in Haiku. Dennis explained that back then there

were a lot of pineapple farms in Haiku, each owned by various local families: the Shirotas, Yamamuras, Shishidos, Perreiras, Ichikawas, Hiromotos, Tamayoses and the Dois. Growing up, Dennis remembers the pineapple fields as being a significant part of the rural landscape in Haiku. Most people living in Haiku, Dennis described, were growing pineapple or working at the Pauwela Dairy or Haserot Cannery (formerly Libby Cannery). When Haserot Cannery closed in the 1960's, all the pineapple grown in Haiku was taken to the cannery in Kahului. The Yamamura's were the last private pineapple grower. Dennis is unsure if they are still growing pineapples, since the Kahului cannery closed.

Dennis and his family moved to Haiku in 1954 when his parents purchased their house on Lihau Place. Today, Dennis lives on the same street, a next door neighbor to the house in which he grew up. In order to get to his home, Dennis must travel along Haiku Road and cross Lilikoi Gulch, the site of the proposed improvements. Dennis is familiar with the area since he has been a resident of Haiku, Lihau Place in particular, since 1954.

The project site – where Haiku Road crosses Lilikoi Gulch – may be described as being located within a relatively central area of Haiku. The crossing over Lilikoi Gulch provides access to an existing residential neighborhood that was once called Rice Camp. Dennis explained that in the vicinity of the project site there was once Nakatsukasa Store and Mukai Store, both of which have closed down over the years. He also pointed out that there was once a community center nearby and that while there is a relatively new post office in the area, the post office has always been there, albeit in another building across the street. Also in the area, and existing today, are Fukushima Store and the cannery warehouse. These days the cannery warehouse is home to a few commercial establishments, however, in the past, its purpose was to store pineapple.

As Dennis regularly travels Haiku Road in the vicinity of, as well as at the project site itself, Dennis remembers seeing several traffic accidents in the area. Dennis explained that there are large trees in

the area and that he remembers having seen several accidents in which cars have hit the trees. Dennis also describes Haiku Road as being regularly used by bicyclists and pedestrians who often walk the road for exercise. He described Haiku Road at its crossing over Lilikoi Gulch as not having guardrails but having posts at one point in time. Afterwards, the County installed guardrails which then took away walking space along the roadway which was formerly utilized by pedestrians. Dennis hopes that the County will consider widening the road to provide for a safer pedestrian walkway.

When asked if he knows of any cultural practices having occurred or occurring in at the project site or in the vicinity of the project site, Dennis responded that he, personally, knows of none although he is not certain. Dennis described, though, gulches in general as sometimes being of cultural significance. He has never in his childhood or in recent years explored the gulch.

In discussing the project, Dennis does not personally know of any cultural concerns. He only asks that the County consider widening the road to provide for a safer walkway for pedestrians and travel-way for bicyclists.

Refer to **Appendix "F"**.

b. <u>Potential Impacts and Proposed Mitigation Measures</u>

From a recent historical perspective, land underlying the proposed project site was primarily used as a County roadway and Lilikoi Gulch is a natural drainageway. No indications of cultural practices, such as gathering, access, or religious traditions, are known to be associated with the project site.

With regard to the proposed project, no adverse impact to cultural resources, practices, and traditions is anticipated.

8. Air and Noise Quality

a. Existing Conditions

Due to the low level of residential and commercial development in the Haiku area, the lack of major point sources of air pollution, and the prevailing tradewind conditions, the Haiku region has good air quality. The primary source of emissions in the vicinity of the project site may be attributed to motor vehicles traversing Haiku Road. However, Haiku Road is a local rural roadway and these mobile sources have no significant adverse effect on air quality in the region.

There are no significant noise generators in the vicinity of the project site. Noise generated in this locale may be attributed to traffic in the Haiku area.

b. Potential Impacts and Proposed Mitigation Measures

Airborne particulates including dust may be generated during site preparation and construction activities. However, BMPs for dust control measures, including regular watering and sprinkling, will be implemented as needed to minimize wind-blown emissions.

In the long term, vehicle-generated emissions will not adversely impact local and regional ambient air quality conditions.

As with air quality, ambient noise conditions will be temporarily impacted by construction activities. Heavy construction equipment such as bulldozers, front end loaders, and dump trucks and trailers will be the dominant source of noise during site construction. Construction generated noise will be mitigated through BMPs and construction activities will be limited to daylight work hours only. The contractor will coordinate with the State Department of Health to ensure that community noise permits are obtained, as appropriate.

9. Scenic and Open Space Resources

a. Existing Conditions

The project site is located in the Haiku area, abutting the makai side of Haiku

Road. The bottom of Lilikoi Gulch is approximately 23 feet below the roadway and there are no vertical structures that are high enough to impede views from the roadway.

The project site does not lie within a scenic view corridor.

b. Potential Impacts and Proposed Mitigation Measures

Proposed vertical improvements include guardrails along the roadway edge and walls and energy dissipators within the drainageway which is approximately 23 feet below the roadway. These structures are not anticipated to have substantial, adverse impacts on existing view corridors.

B. SOCIO-ECONOMIC ENVIRONMENT

1. Population and Demography

a. Existing Conditions

The population of the County of Maui has exhibited relatively strong growth over the past decade. According to the U.S. Census, the resident population of the County of Maui in 2000 was 128,094 and 154,834 in 2010. This represents a 20.9 percent increase over the past decade (U.S. Census Bureau, 2010). The population of the County of Maui is projected to reach 174,450 by 2020 and 199,550 by 2030 (SMS, 2006).

The project site is located in Haiku, Maui, within the Paia-Haiku Community Plan region. As the County's population has grown, the resident population of the Paia-Haiku region has also slightly increased. The estimated population of the region in 2000 was approximately 11,866. The resident population for this region in 2010 was estimated to be approximately 12,777, representing a 7.7 percent increase over the past decade (U.S. Census Bureau, 2010). The population for the region is projected to reach approximately 13,168 by 2020 and 13,863 by 2030 (SMS, 2006).

b. Potential Impacts and Proposed Mitigation Measures

The project site is located within a rural residential area. Although the proposed project is not a population generator, the proposed improvements

will improve conditions along Haiku Road, a key roadway that provides access throughout the Haiku community. Due to the public safety purpose of the project, the proposed improvements are considered a community benefit as future erosion of the embankment below Haiku Road and closure of the roadway due to stormwater runoff from heavy rains will be prevented upon completion of the project. The proposed project includes a BMP mitigation measure to prevent erosion of the embankments and sediments from adversely impacting downstream waters.

2. Labor Force and Economy

a. Existing Conditions

In May 2012, the unemployment rate was 6.7 percent for Maui County and 6.6 percent for the island of Maui. In comparison, the unemployment rate in May 2011 was 7.6 percent for Maui County and 7.6 percent for Maui Island. The unemployment rate decreased by 0.9 percent for Maui County and 1.0 percent for Maui Island (Hawaii Workforce Informer).

The visitor industry continues to represent a major component of the Maui economy. In 2010, a total of 2,092,069 visitors traveled to Maui by air. Of those visitors, 1,802,254 were domestic, while 289,815 visitors were from foreign countries. In 2010, Maui had an average occupancy rate of 68.1 percent (County of Maui, 2012). The desirable climate and environment of the Haiku region provides opportunities for alternative accommodations for visitors such as bed and breakfast homes and transient vacation rental homes.

Neighborhood businesses in the area such as the former Haiku Cannery provide retail services to residents and visitors.

b. Potential Impacts and Proposed Mitigation Measures

Short-term economic benefit associated with construction expenditures for the Haiku Road culvert improvements is anticipated. In the long term, the improvements will ensure a reliable transportation system in Haiku in order to transport people and goods throughout the region. Also, the proposed project will improve public safety and protect downstream waters by preventing future erosion of the embankment below Haiku Road, closure of

the roadway and erosion of the adjacent properties from stormwater runoff due to heavy rains.

C. PUBLIC SERVICES

1. Police and Fire Protection

a. Existing Conditions

The County of Maui's Police Department headquarters are located in Wailuku. There are three (3) patrol divisions on the island of Maui. These are the Wailuku, Lahaina, and Hana divisions. The Wailuku division covers Central Maui, Paia-Haiku, Kihei-Makena, and Upcountry Maui. Currently, the Wailuku division utilizes 146 patrol officers and 11 motorized beats.

Fire prevention, suppression, and protection services for the project area are provided by the County Department of Fire and Public Safety's Paia Fire Station, located along Hana Highway in Paia Town. Additional support is provided by the Makawao Fire Station located in Makawao Town on Makawao Avenue.

b. Potential Impacts and Proposed Mitigation Measures

The proposed project is anticipated to improve access through this area with a reliable roadway and drainage improvements. The proposed improvements are anticipated to mitigate the existing erosion of the embankment below Haiku Road caused by stormwater runoff during heavy rains that forces closure of Haiku Road due to unsafe conditions. With the proposed improvements, the integrity of Haiku Road is protected and traffic circulation for the public, as well as emergency vehicles, is anticipated to be improved. As this is roadway and drainage improvements, there are no anticipated adverse impacts to police or fire protection. During construction of the project, a traffic control plan will be implemented that will enable emergency vehicles, as well as the public, to access the area through alternative routes.

2. Medical Facilities

a. Existing Conditions

Maui Memorial Medical Center is currently the only major medical facility on the island. Acute, general, and emergency care services are provided by the 231-bed facility (Maui Memorial Medical Center, 2011). In addition, Paia has medical and dental clinics to service local community residents. Haiku also has a medical office and a pharmacy.

b. Potential Impacts and Proposed Mitigation Measures

The proposed project improves the drainage system in this area and is not a population generator. As such, it is not anticipated to have adverse impacts on existing medical facilities or services on Maui.

3. Solid Waste

a. Existing Conditions

Except for remote areas, single-family solid waste collection service is provided by the County of Maui on a weekly basis.

Residential solid waste is collected by County refuse collection crews and disposed at the Central Maui Landfill. Commercial waste from private collection companies is also disposed of at the landfill.

b. Potential Impacts and Proposed Mitigation Measures

As the Central Maui Landfill does not accept construction waste, the proposed reconstructed culvert and related improvements will dispose the construction waste at an approved construction waste disposal site. Also, periodic maintenance of the drainageway will be required to remove debris and sediment from the drainage system to an approved waste disposal site. Therefore, the proposed drainage improvements are not anticipated to adversely impact existing solid waste services and disposal facilities on Maui.

4. Recreational Resources

a. Existing Conditions

The main facilities catering to the recreational needs of the Haiku area are the Haiku Community Center and park, located along Hana Highway. Another major shoreline recreational resource of the Haiku area is Hookipa Beach Park, an internationally recognized park known for its excellent surf and windsurfing. The Fourth Marine Division Park is located further south from the project site on Kokomo Road.

b. Potential Impacts and Proposed Mitigation Measures

The proposed project improves the drainage system in the area and is not a population generator. As such, it is not anticipated to adversely impact the existing recreational facilities located in and around the Haiku area.

5. Educational Facilities

a. Existing Conditions

The State of Hawaii, Department of Education operates seven (7) public schools in Upcountry Maui. They are Makawao Elementary School, Kalama Intermediate School, Pukalani Elementary School, Kula Elementary School, Haiku Elementary School, Paia Elementary School, and King Kekaulike High School.

The region is also served by the privately operated Montessori Preschool, Doris Todd, Haleakala Waldorf School, Seabury Hall, and the Maui Campus of Kamehameha Schools.

b. Potential Impacts and Proposed Mitigation Measures

The proposed project is not a population generator and is not anticipated to adversely impact existing education facilities or services on Maui.

D. INFRASTRUCTURE

1. Roadways

a. Existing Conditions

The project site is located under Haiku Road, a County roadway that serves as one of the main access roads through the Haiku area between Kokomo Road and Kauhikoa Road. In the vicinity of the project site, Haiku Road is a predominantly narrow, divided two-lane, two-way roadway generally oriented in the east-west direction. Haiku Road also provides the main access to the commercial area of Haiku Town at its intersection with Kokomo Road a narrow County, divided 2-lane, 2-way roadway that is generally oriented in a north-south direction. Kauhikoa Road is a 2-lane County roadway oriented in a north-south direction.

During the 2007 storm, a 15-ft. long downstream section of a 6.0-ft.-wide by 6-ft.-high concrete box culvert broke off. This resulted in a nearly vertical eroded scarp at the damaged face of the culvert and undermined the shoulder and several guardrails on Haiku Road. Refer to Exhibit 4.

Much of Haiku is composed of residential and agricultural areas. Due to the rural nature of the area, traffic is generally light and there is no chronic traffic congestion.

b. Potential Impacts and Proposed Mitigation Measures

During construction, there will be temporary traffic disruptions, however, a traffic control plan will be implemented and coordinated with the Maui Police Department. The improvements are limited to the reconstruction of the existing drainage culvert and associated improvements and will not generate more traffic in the area, as such no adverse impacts on existing roadways in the area are anticipated. Further, as previously noted, a detour route will be established during construction to enable access to the area from alternative routes. In the long term, the proposed improvements will ensure a reliable transportation and drainage system in this area. Also, the proposed project will improve public safety and protect downstream waters by preventing future erosion of the embankment below Haiku Road, closure of

the roadway and erosion of adjacent properties from stormwater runoff due to heavy rains.

2. Water System

a. Existing Conditions

According to the Department of Water Supply (DWS), domestic water for the Haiku region is provided by the DWS's Haiku System. Water for the Haiku System is provided by the Haiku Aquifer which has a sustainable yield of 27 million gallons per day with storage provided by the 0.25 million gallon Haiku Kauhikoa tank. There is an existing 6-inch waterline located in Haiku Road at the project site.

b. Potential Impacts and Proposed Mitigation Measures

The proposed project is limited to repairs to the existing box culvert and embankment on Haiku Road, and construction of associated drainage improvements. The proposed project does not involve or require the use of water. However, during construction it may be necessary to temporarily relocate a portion of the 6-inch waterline. As recommended by the DWS, appropriate BMPs will be used during construction in order to protect the integrity of groundwater and surface water resources in the vicinity of the project site. The use of non-potable water, if available, for dust control, irrigation, and other non-potable uses will be considered. The DWS concurred that the project is not anticipated to adversely affect existing water resource systems within the area, provided the existing waterline is protected during construction.

3. Wastewater System

a. Existing Conditions

There are no County wastewater treatment facilities servicing the Haiku area. Wastewater disposal in the region is accommodated via privately owned cesspools or individual wastewater treatment systems, such as septic tanks and leach fields.

b. Potential Impacts and Proposed Mitigation Measures

The proposed improvements are limited to improvements to a portion of Haiku Road and existing box culvert and embankment, and construction of associated drainage improvements to accommodate stormwater runoff during heavy rains. The proposed project will not generate any wastewater. As such, no adverse impacts on the County wastewater system is anticipated.

4. Drainage

a. Existing Conditions

There is an existing 6 ft. by 6 ft. concrete box culvert under Haiku Road that allows stormwater to flow under the roadway through Lilikoi Gulch. Over the years at the outlet of the box culvert, stormwater runoff has scoured the gulch floor, eroded the subgrade under the outlet portion of the box culvert and eroded the roadside embankment. During the 2007 storm, the combined erosion of the subgrade at the outlet and erosion of the roadside embankment along with the weight of the stormwater and debris flowing through the culvert caused approximately 15 feet of the outlet portion of the box culvert to break off.

b. Potential Impacts and Proposed Mitigation Measures

The Department of Public Works proposes to improve drainage through Lilikoi Gulch and stabilize the roadside embankment by reconstructing the broken portion of the 6.0-ft. wide by 6.0-ft. high reinforced concrete box culvert, construction of an outlet headwall, construction of a grated inlet and 18-inch drainline to handle runoff from Haiku Road, construction of a 21-ft. wide by 72-ft. long energy dissipator basin and a 26-ft.-long grouted riprap transition. The new headwall, energy dissipator basin and grouted riprap transition will mitigate the scouring of the gulch floor and the roadside embankment from erosion and prevent future damage to the existing concrete box culvert.

During construction, Best Management Practices (BMPs) will be implemented, such as but not limited to, implementing erosion and sediment control measures, materials pollution prevention plan, and a hazardous material pollution plan. Refer to project plans in **Appendix "B".**

Best Management Practices (BMPs) for erosion and sediment control to be implemented include the following:

1. Control dust by means of water trucks or by installing temporary sprinkler systems or both, if necessary.

2. Graded areas shall be thoroughly watered after construction activity has ceased for the day and for the weekends and holidays. Avoid overwatering that may cause erosion.

3. All exposed areas shall be paved or grassed as soon as finished grading is completed.

4. Provide temporary berms (sand bags) or other approved measure to divert offsite runoff away from the graded areas. Furthermore, adequate provisions shall be made to prevent sediment-laden runoff from leaving the graded areas such as installation of silt fences or gravel bags downgrade of the graded areas.

5. Electrical, Telephone and Cable Services

a. Existing Conditions

Electrical service is provided by Maui Electric Company (MECO) through an overhead distribution system, located along Haiku Road.

Telephone and cable services are also provided via the overhead distribution system located along Haiku Road by Hawaiian Telcom and Oceanic Time Warner Cable, respectively.

b. Potential Impacts and Proposed Mitigation Measures

During construction, one (1) utility pole located near the project site may be temporarily relocated in order to continue providing electrical, telephone, and cable services to the surrounding area. This relocation will be coordinated by the DPW with MECO, the telephone and cable services. Upon completion of construction, the utility pole will be relocated back to its original location. As such, the proposed project is not anticipated to adversely affect electrical,

telephone, or cable systems.

E. CUMULATIVE AND SECONDARY IMPACTS

Cumulative impacts are defined as the impact on the environment which results from the incremental impact of an action when added to other past, present, and reasonably foreseeable future actions regardless of what agency or person undertakes such other actions.

The proposed project involves improvements to an existing drainage system and is not part of a larger action, nor would it occur within the context of such actions. There are no direct community growth impacts resulting from or occurring with the proposed action. There are no other public works projects anticipated within the project context.

Secondary impacts are those which have the potential to occur later in time or are farther in distance, but are still reasonably foreseeable. They can be viewed as actions of others that are taken because of the presence of the subject project. Secondary impacts from highway projects can occur, for example, because they can induce development by removing one of the impediments to growth—transportation access.

There are no foreseeable secondary impacts associated with the proposed project. The proposed improvements affect an existing drainage culvert and roadway located on Haiku Road. The proposed action is not a population generator, nor will it place additional burden upon infrastructure, the environment, or public services.

The proposed action is expected to benefit the Haiku Community by improving the reliability of the existing drainage and roadway systems in the area. The proposed action will ensure public safety and the environment is not adversely impacted.

III. RELATIONSHIP TO GOVERNMENTAL PLANS, POLICIES AND CONTROLS

III. RELATIONSHIP TO GOVERNMENTAL PLANS, POLICIES AND CONTROLS

A. STATE LAND USE DISTRICTS

Chapter 205, Hawaii Revised Statutes, relating to the Land Use Commission (LUC), establishes the four (4) major land use districts in which lands in the State are placed. These districts are "Urban", "Rural", "Agricultural", and "Conservation".

The project site includes a portion of the County of Maui Haiku Road right-of-way and adjacent privately owned lands. Haiku Road is located within the State "Urban" District. The adjacent Parcel 56 is located within the State "Agricultural" district, while Parcels 47 and 9 are within the State "Urban" District. See **Figure 11**. The proposed action involves improvements to a portion of Haiku Road, repairs to the existing box culvert and embankment, and construction of associated drainage improvements. The public infrastructure improvements are permitted uses in the "Urban" and "Agricultural" Districts.

B. CHAPTER 226, HRS, HAWAII STATE PLAN

Chapter 226, HRS, also known as the Hawaii State Plan, is a long-range comprehensive plan which serves as a guide for the future long-range development of the State by identifying goals, objectives, policies, and priorities, as well as implementation mechanisms. The proposed action is consistent with the following goals of the Hawaii State Plan:

- A strong, viable economy, characterized by stability, diversity, and growth, that enables the fulfillment of the needs and expectations of Hawaii's present and future generations.
- A desired physical environment, characterized by beauty, cleanliness, quiet, stable natural systems, and uniqueness, that enhances the mental and physical well-being of the people.
- Physical, social, and economic well-being, for individuals and families in Hawaii, that nourishes a sense of community responsibility, of caring, and of participation in community life.

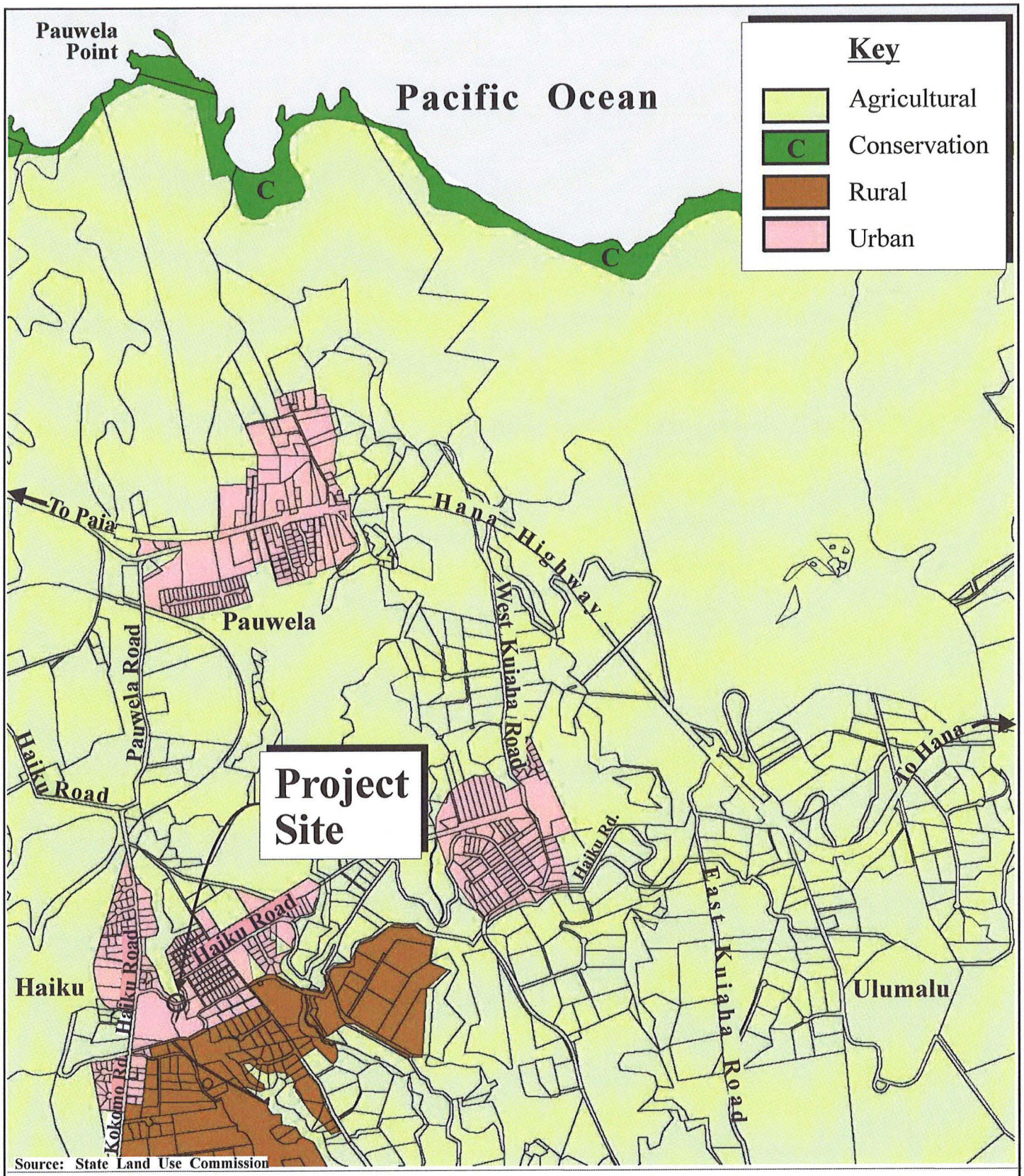

Source: State Land Use Commission

Figure 11

Proposed Haiku Road and Culvert Improvements

State Land Use Designations Map

NOT TO SCALE

Prepared for: County of Maui, Department of Public Works

MUNEKIYO & HIRAGA, INC.

SEY/HaikuRoad/SLUD

1. Objectives and Policies of the Hawaii State Plan

The proposed reclassification is consistent with the following objectives and policies of the Hawaii State Plan:

Chapter 226-12, HRS, Objective and policies for the physical environment--scenic, natural beauty, and historic resources.

> **226-12 (b)(3), HRS:** *Promote the preservation of views and vistas to enhance the visual and aesthetic enjoyment of mountains, ocean, scenic landscapes, and other natural features.*

Chapter 226-13, HRS, Objectives and policies for the physical environment--land, air, and water quality.

> **226-13 (b)(5), HRS:** *Reduce the threat to life and property from erosion, flooding, tsunamis, hurricanes, earthquakes, volcanic eruptions, and other natural or man-induced hazards and disasters.*

Chapter 226-26, HRS, Objectives and policies for socio-cultural advancement–public safety.

> **226-26(a)(1), HRS:** *Assurance of public safety and adequate protection of life and property for all people.*

C. GENERAL PLAN OF THE COUNTY OF MAUI

As indicated by the Maui County Charter, the purpose of the general plan shall be to:

> *... indicate desired population and physical development patterns for each island and region within the county; shall address the unique problems and needs of each island and region; shall explain opportunities and the social, economic, and environmental consequences related to potential developments; and shall set forth the desired sequence, patterns and characteristics of future developments.*

Chapter 2.80B of the Maui County Code, relating to the General Plan and community plans implements the foregoing Charter provision through enabling legislation which calls for a Countywide Policy Plan and a Maui Island Plan. The Countywide Policy Plan was adopted as Ordinance No. 3732 and took effect upon signing by the Mayor on March 24, 2010. The Maui Island Plan is currently in the process of review and formulation by the Maui County

Council.

With regard to the Countywide Policy Plan, Section 2.80B.030 of the Maui County Code states the following.

> *The countywide policy plan shall provide broad policies and objectives which portray the desired direction of the County's future. The countywide policy plan shall include:*
>
> *1. A vision for the County;*
> *2. A statement of core themes or principles for the County; and*
> *3. A list of countywide objectives and policies for population, land use, the environment, the economy, and housing.*

Core principles set forth in the Countywide Policy Plan are listed as follows:

1. Excellence in the stewardship of the natural environment and cultural resources;

2. Compassion for and understanding of others;

3. Respect for diversity;

4. Engagement and empowerment of Maui County residents;

5. Honor for all cultural traditions and histories;

6. Consideration of the contributions of past generations as well as the needs of future generations;

7. Commitment to self-sufficiency;

8. Wisdom and balance in decision making;

9. Thoughtful, island-appropriate innovation; and

10. Nurturance of the health and well-being of our families and our communities.

Congruent with these core principles, the Countywide Policy Plan identifies goals objectives, policies and implementing actions for pertinent functional planning categories, which are identified as follows:

1. Natural environment

2. Local cultures and traditions

3. Education

4. Social and healthcare services

5. Housing opportunities for residents

6. Local economy

7. Parks and public facilities

8. Transportation options

9. Physical infrastructure

10. Sustainable land use and growth management

11. Good governance

With respect to the Haiku Road and Culvert Improvement Project, the following goals, objectives, policies and implementing actions are illustrative of the project's compliance with the Countywide Policy Plan.

PROTECT THE NATURAL ENVIRONMENT

Goal:

Maui County's natural environment and distinctive open spaces will be preserved, managed, and cared for in perpetuity.

Objective:

Improve the stewardship of the natural environment.

IMPROVE PHYSICAL INFRASTRUCTURES

Goal:

Maui County's physical infrastructure will be maintained in optimum condition and will provide for and effectively serve the needs of the County through clean and sustainable technologies.

In summary, the Haiku Road and Drainage Culvert Improvements Project is consistent with the themes and principles of the Countywide Policy Plan.

D. PAIA-HAIKU COMMUNITY PLAN

Within Maui County, there are nine (9) community plan regions. From a General Plan implementation standpoint, each region is governed by a Community Plan implementation standpoint, each region is governed by a Community Plan which sets forth desired land use patterns, as well as goals, objectives, policies, and implementing actions for a number of functional areas, including infrastructure-related parameters.

The project site is located within the Paia-Haiku region which designates Haiku Road as a roadway. The adjacent properties are designated as "AG, Agriculture" (Parcel 56), "B" Business/Commercial" (Parcel 9), and "SF, Single Family" (Parcel 47) in the Community Plan. See **Figure 12**. One of the major problems cited in the Community Plan is drainage. The plan notes that there are existing drainage problems in the region, and notes that the design of new drainage improvements should be adequate, in terms of protecting downslope properties and the quality of offshore waters (County of Maui, 1995).

The proposed reconstructed culvert and associated drainage structures will prevent erosion of the embankment below Haiku Road and improve drainage within an existing drainageway. The proposed improvements will also reduce sedimentation due to erosion, and thus protect water quality downstream.

The proposed project is consistent with the following goals, policies, and objectives of the Community Plan:

LAND USE

Goal

A well-planned community that preserves the region's small town ambiance and rural character, coastal scenic vistas, and extensive agricultural land use, and accommodates the future needs of residents at a sustainable rate of growth and in harmony with the region's natural environment, marine resources, and traditional uses of the shoreline and mauka lands.

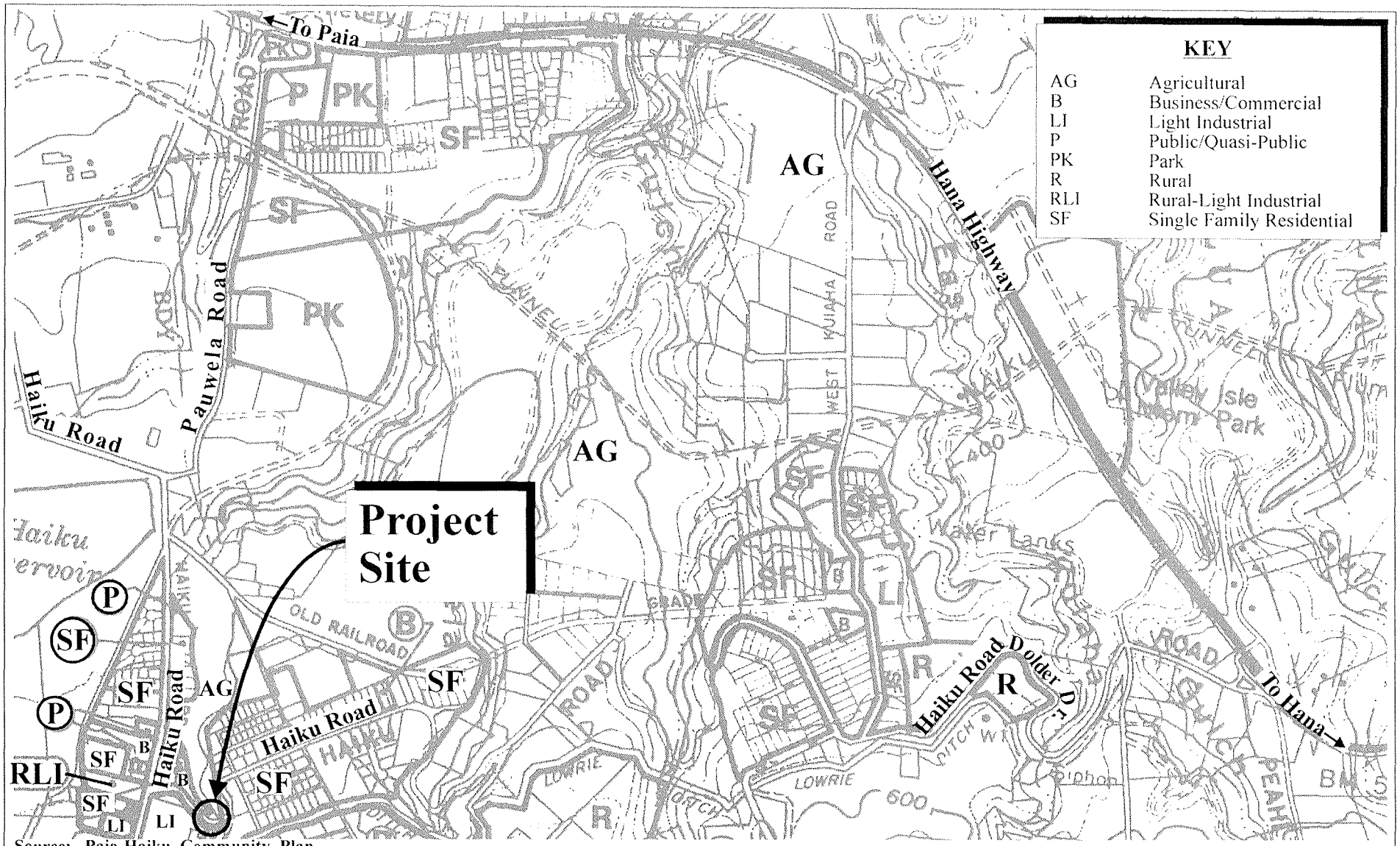

Source: Paia-Haiku Community Plan

Figure 12 Proposed Haiku Road and Culvert Improvements

Community Plan Land Use Designations

NOT TO SCALE

Prepared for: County of Maui, Department of Public Works

MUNEKIYO & HIRAGA, INC.

COM/DFireHaiku/CPLUD

Objectives and Policies

- *Protect the marine environment and quality of the offshore waters.*

- *Avoid development of flood prone areas, stream channels and gulches due to safety concerns, open space relief, and visual separation. Drainage channels should be regularly maintained by appropriate agencies.*

ENVIRONMENT

Goal

The preservation and protection of the natural environment, marine resources and scenic vistas to maintain the rural and natural ambiance and character of the region.

Objectives and Policies

- *Protect and maintain the quality of the nearshore and offshore waters and marine environment. Ensure that stormwater runoff and siltation from proposed development will not adversely affect the marine environment and nearshore and offshore water quality. Open culverts which empty directly into nearshore waters should be avoided.*

PHYSICAL INFRASTRUCTURE

Drainage

Goal

Improvements to the storm drainage system which provide for a high standard in preventing flooding and property damage while not adversely affecting the marine environment and nearshore and offshore water quality.

E. ZONING

As a roadway, the zoning for Haiku Road from its center line is the adjacent property zoning. The zoning designation for the adjacent lands are "Agricultural" District (Parcel 56), "Interim" District (Parcel 47), and "Urban Reserve" (Parcel 9). Public infrastructure, such as roadways and drainage improvements, are permitted in all zoning districts.

F. COASTAL ZONE MANAGEMENT OBJECTIVES AND POLICIES

The Hawaii Coastal Zone Management Program (HCZMP), as formalized in Chapter 205A, HRS, establishes objectives and policies for the preservation, protection, and restoration of natural resources of Hawaii's coastal zone. The project site lies outside of the County of Maui's Special Management Area (SMA).

Although a SMA permit is not required for the project, this section addresses the project's relationship to applicable coastal zone management considerations, set forth in Chapter 205A, Hawaii Revised Statutes.

1. Recreational Resources

Objective:

Provide coastal recreational opportunities accessible to the public.

Policies:

(A) Improve coordination and funding of coastal recreational planning and management; and

(B) Provide adequate, accessible, and diverse recreational opportunities in the coastal zone management area by:

i. Protecting coastal resources uniquely suited for recreational activities that cannot be provided in other areas;

ii. Requiring replacement of coastal resources having significant recreational value, including but not limited to surfing sites, fishponds, and sand beaches, when such resources will be unavoidably damaged by development; or requiring reasonable monetary compensation to the State for recreation when replacement is not feasible or desirable;

iii. Providing and managing adequate public access, consistent with conservation of natural resources, to and along shorelines with recreational value;

iv. Providing an adequate supply of shoreline parks and other recreational facilities suitable for public recreation;

v. *Ensuring public recreational uses of county, state, and federally owned or controlled shoreline lands and waters having recreational value consistent with public safety standards and conservation of natural resources;*

vi. *Adopting water quality standards and regulating point and non-point sources of pollution to protect, and where feasible, restore the recreational value of coastal waters;*

vii. *Developing new shoreline recreational opportunities, where appropriate, such as artificial lagoons, artificial beaches, and artificial reefs for surfing and fishing; and*

viii. *Encouraging reasonable dedication of shoreline areas with recreational value for public use as part of discretionary approvals or permits by the land use commission, board of land and natural resources, and county authorities; and crediting such dedication against the requirements of Section 46-6.*

Response: The proposed project is located approximately 2.5 miles mauka (inland) from the shoreline and is not anticipated to result in adverse impacts to existing coastal or inland recreational resources. The proposed improvements include an energy dissipator basin as a BMP to prevent erosion of the embankments to mitigate adverse impacts to water quality and marine resources due to sedimentation. Also, during construction an erosion control plan will be implemented to protect downstream and coastal waters. The project is not anticipated to limit or compromise any existing shoreline recreational activity.

2. Historic Resources

Objective:

Protect, preserve and, where desirable, restore those natural and manmade historic and prehistoric resources in the coastal zone management area that are significant in Hawaiian and American history and culture.

Policies:

(A) Identify and analyze significant archeological resources;

(B) Maximize information retention through preservation of remains and artifacts or salvage operations; and

(C) Support state goals for protection, restoration, interpretation, and display of historic resources.

Response: The proposed project is not anticipated to have an adverse effect on historic or cultural resources. An archaeological assessment survey was conducted for the proposed project. The archaeological assessment of the project site revealed that there were no significant material culture remains within the project site. Given that there were no cultural resources located during the survey, the archaeological assessment report determined that there are no significance assessments to be made. However, the report noted that precautionary archaeological monitoring may be warranted for future work, given the presence of relatively thick vegetation in the area.

It is noted that in the event that a discovery of significant cultural materials and/or burials is made during construction of the subject project, all work in the immediate area of the find will cease and the State Historic Preservation Division (SHPD) will be notified to discuss mitigation measures, in accordance with Chapter 6E, Hawaii Revised Statutes. Refer to **Appendix "E"**.

3. Scenic and Open Space Resources

Objective:

Protect, preserve and, where desirable, restore or improve the quality of coastal scenic and open space resources.

Policies:

(A) Identify valued scenic resources in the coastal zone management area;

(B) Ensure that new developments are compatible with their visual environment by designing and locating such developments to minimize the alteration of natural landforms and existing public views to and along the shoreline;

(C) Preserve, maintain, and, where desirable, improve and restore shoreline open space and scenic resources; and

(D) Encourage those developments that are not coastal dependent to locate in inland areas.

Response: The project site is currently being utilized as Haiku Road and a drainageway much of which is in Lilikoi Gulch and is not deemed a scenic resource. The site is also located approximately 2.5 miles away from the shoreline and is not part of a scenic view corridor to the shoreline. No substantive adverse impacts to scenic or open space resources are anticipated to result from the proposed action.

4. Coastal Ecosystems

Objective:

Protect valuable coastal ecosystems, including reefs, from disruption and minimize adverse impacts on all coastal ecosystems.

Policies:

(A) Exercise an overall conservation ethic, and practice stewardship in the protection, use, and development of marine and coastal resources;

(B) Improve the technical basis for natural resource management;

(C) Preserve valuable coastal ecosystems, including reefs, of significant biological or economic importance;

(D) Minimize disruption or degradation of coastal water ecosystems by effective regulation of stream diversions, channelization, and similar land and water uses, recognizing competing water needs; and

(E) Promote water quantity and quality planning and management practices that reflect the tolerance of fresh water and marine ecosystems and maintain and enhance water quality through the development and implementation of point and nonpoint source water pollution control measures.

Response: The proposed project is 2.5 miles inland from the Pacific Ocean and is not anticipated to result in substantive, adverse impacts to coastal ecosystems. BMPs and appropriate drainage design will mitigate potential adverse impacts from sediments to the coastal environment. During construction an erosion control plan will be implemented.

5. Economic Uses

Objective:

Provide public or private facilities and improvements important to the State's economy in suitable locations.

Policies:

(A) Concentrate coastal dependent development in appropriate areas;

(B) Ensure that coastal dependent development such as harbors and ports, and coastal related development such as visitor industry facilities and energy generating facilities, are located, designed, and constructed to minimize adverse social, visual, and environmental impacts in the coastal zone management area; and

(C) Direct the location and expansion of coastal dependent developments to areas presently designated and used for such developments and permit reasonable long-term growth at such areas, and permit coastal dependent development outside of presently designated areas when:

I. Use of presently designated locations is not feasible;

ii. Adverse environmental effects are minimized; and

iii. The development is important to the State's economy.

Response: The proposed project is 2.5 miles inland from the Pacific Ocean and is not a coastal dependent development. Short-term employment opportunities will be generated during project construction. There are no significant, adverse economic impacts associated with the proposed project which will be designed to protect property, ensure public safety, and protect the degradation of water quality due to sedimentation. Further, the proposed action is not contrary to the objective and policies for economic use.

6. Coastal Hazards

Objective:

Reduce hazard to life and property from tsunami, storm waves, stream flooding, erosion, subsidence and pollution.

Policies:

(A) Develop and communicate adequate information about storm wave, tsunami, flood, erosion, subsidence, and point and nonpoint source pollution hazards;

(B) Control development in areas subject to storm wave, tsunami, flood, erosion, hurricane, wind, subsidence, and point and nonpoint pollution hazards;

(C) Ensure that developments comply with requirements of the Federal Flood Insurance Program; and

(D) Prevent coastal flooding from inland projects.

Response: The project site is not located in a tsunami zone or in any special flood zone. No substantive adverse impacts resulting from drainage are anticipated to adjoining or downstream properties, as the proposed project is anticipated to benefit the community by improving drainage conditions in the area. The drainage improvements will prevent future scouring in the gulch floor and embankment from runoff and prevent future damage to the existing drainage culvert.

7. Managing Development

Objective:

Improve the development review process, communication, and public participation in the management of coastal resources and hazards.

Policies:

(A) Use, implement, and enforce existing law effectively to the maximum extent possible in managing present and future coastal zone development;

(B) Facilitate timely processing of applications for development permits and resolve overlapping or conflicting permit requirements; and

(C) Communicate the potential short and long-term impacts of proposed significant coastal developments early in their life-cycle and in terms understandable to the public to facilitate public participation in the planning and review process.

Response: Opportunities for public understanding of the proposed project are provided for during the Chapter 343, HRS Environmental Assessment (EA) process. All aspects of development will be conducted in accordance with applicable Federal, State, and County standards. Early consultation with agencies and interested parties was conducted during the formulation of this Draft EA.

8. Public Participation

Objective:

Stimulate public awareness, education, and participation in coastal management.

Policies:

(A) Promote public involvement in coastal zone management processes;

(B) Disseminate information on coastal management issues by means of educational materials, published reports, staff contact, and public workshops for persons and organizations concerned with coastal issues, developments, and government activities; and

(C) Organize workshops, policy dialogues, and site-specific mediations to respond to coastal issues and conflicts.

Response: As previously mentioned, the EA document will be processed in accordance with Chapter 343, HRS, and opportunity for comment by agencies and the public will be provided. The proposed project complies with the objectives of public awareness, education, and participation.

9. Beach Protection

Objective:

Protect beaches for public use and recreation.

Policies:

(A) Locate new structures inland from the shoreline setback to conserve open space, minimize interference with natural shoreline processes, and minimize loss of improvements due to erosion;

(B) Prohibit construction of private erosion-protection structures

seaward of the shoreline, except when they result in improved aesthetic and engineering solutions to erosion at the sites and do not interfere with existing recreational and waterline activities; and

(C) Minimize the construction of public erosion-protection structures seaward of the shoreline.

Response: The proposed project is located well beyond the vicinity of the shoreline area (2.5 miles inland of shoreline) and is not anticipated to affect natural beach processes. In broad objective terms, the proposed project will utilize appropriate BMPs to manage overall drainage and erosion control for the project site and protect coastal waters from adverse impacts of sediments from stormwater runoff during heavy rains.

10. Marine Resources

Objective:

Promote the protection, use, and development of marine and coastal resources to assure their sustainability.

Policies:

(A) Ensure that the use and development of marine and coastal resources are ecologically and environmentally sound and economically beneficial;

(B) Coordinate the management of marine and coastal resources and activities to improve effectiveness and efficiency;

(C) Assert and articulate the interests of the State as a partner with federal agencies in the sound management of ocean resources within the United States exclusive economic zone;

(D) Promote research, study, and understanding of ocean processes, marine life, and other ocean resources in order to acquire and inventory information necessary to understand how ocean development activities relate to and impact upon ocean and coastal resources; and

(E) Encourage research and development of new, innovative technologies for exploring, using, or protecting marine and coastal resources.

Response: The project is not located in the vicinity of the shoreline. The use of appropriate BMPs and an erosion control plan during construction and drainage designs will mitigate potential adverse impacts to marine resources from sediments due to stormwater runoff during heavy rains.

In addition to the foregoing objectives and policies, SMA permit review criteria pursuant to §205A-30.5, HRS provides that:

> *No special management area use permit or special management area minor permit shall be granted for structures that allow artificial light from floodlights, uplights, or spotlights used for decorative or aesthetic purposes when the light:*
>
> *(1) Directly illuminates the shoreline and ocean waters; or*
>
> *(2) Is directed to travel across property boundaries toward the shoreline and ocean waters.*

Further, this restriction shall not apply to structures with "*artificial lighting provided by a government agency or its authorized users for government operations, security, public safety, or navigational needs; provided that a government agency or its authorized users shall make reasonable efforts to properly position or shield lights to minimize adverse impacts*".

The project site is located in the Haiku area on parcels that are located at a significant distance from the shoreline. The project does not propose any outdoor lighting.

IV. SUMMARY OF UNAVOIDABLE IMPACT ON THE ENVIRONMENT AND RESOURCES

IV. SUMMARY OF UNAVOIDABLE IMPACT ON THE ENVIRONMENT AND RESOURCES

Project construction will result in a certain amount of unavoidable construction-related impacts. These impacts include noise and air quality impacts associated with the operation of construction equipment. Air quality will also be impacted by dust generated from site work. The construction-related impacts will be temporary and mitigated through implementation of appropriate Best Management Practices (BMPs).

The development of the proposed project will involve the commitment of land, fuel, labor, funding, and material resources. However, the commitment of resources necessary to implement the proposed project will be justified, given the eventual community benefits to be realized through the completion of the repairs to the existing box culvert and embankment and construction of associated improvements in order to prevent future erosion of the embankments, degradation of water quality, and possible road closures due to safety concerns.

In the long term, the construction of the Haiku Road and drainage culvert improvements are not anticipated to create any significant, long-term adverse environmental effects.

V. ALTERNATIVES TO THE PROPOSED ACTION

V. ALTERNATIVES TO THE PROPOSED ACTION

The Department of Public Works (DPW) evaluated the following alternatives in selecting the scope of work for the proposed project:

A. PREFERRED ALTERNATIVE

The proposed development plan involves the repair of the existing box culvert and embankment and construction of associated improvements. The improvements will repair existing drainage system and be designed to prevent erosion of the embankment below Haiku Road from stormwater runoff. The proposed drainage improvements will provide a reliable system that will prevent erosion of adjacent properties and the roadway. Degradation of water quality will also be mitigated due to the construction of an energy dissipator basin as a BMP measure. For these reasons, the proposed development plan substantially meets the needs of the Haiku region and its residents and is the preferred alternative.

B. NO ACTION ALTERNATIVE

The "no action" alternative would see the Haiku Road area continue to experience potential for flooding. Furthermore, as a consequence of further erosion of the embankment, future road closures, erosion of adjacent properties, and continued degradation of water quality may also result. The "no action" alternative would not meet the needs of Haiku residents and businesses in providing safe and adequate transportation service for the area, especially for emergency vehicles, and a reliable drainage system to avoid flooding. The no action alternative could result in additional damage to Haiku Road and future road closures, added costs to repair the drainage culvert and Haiku Road. Indirectly, the road closure could result in the loss of business for nearby businesses.

C. DEFERRED ACTION ALTERNATIVE

A "deferred action" alternative would have similar consequences to the "no action" alternative in terms of leaving the residents and businesses of the Haiku Road area with the

potential for future flooding and road closures because of the existing drainage conditions. This deferred alternative could also result in higher costs to the County of Maui as labor and material costs may continue to increase during the period that action is not taken. Also, future flooding, additional damage, and road closures would result in added costs to the County of Maui and community to improve the drainage culvert and Haiku Road to an acceptable level of safety and reliability.

VI. SIGNIFICANCE CRITERIA ASSESSMENT

VI. SIGNIFICANCE CRITERIA ASSESSMENT

The significance criteria of Section 12, of the Administrative Rules of Title 11, Chapter 200, "Environmental Impact Statement Rules", were reviewed and analyzed to determine whether the proposed project will have a significant adverse impact to the environment. The following analysis is provided:

1. **Involves an Irrevocable Commitment to Loss or Destruction of any Natural or Cultural Resources**

   The project site is currently utilized as Haiku Road and a drainageway. There are no known rare, threatened, or endangered species of flora, fauna, avifauna, or critical habitats located within the project site. No significant natural or cultural resources have been identified on the project site. Refer to **Appendices "D"**, **"E"** and **"F"**. Should there be unanticipated finds of culturally significant material during project construction, the State Historic Preservation Division (SHPD) will be notified and appropriate mitigative measures implemented in accordance with SHPD program requirements.

2. **Curtails the Range of Beneficial Uses of the Environment**

   The project is an improvement to an existing drainage system and, as such, is not anticipated to result in adverse environmental impacts. There will be no consequent curtailment of uses of the environment resulting from the proposed action. The improvement will prevent erosion of the embankments from stormwater runoff and release of sediments, thus improving water quality downstream and protecting coastal waters and marine resources.

3. **Conflicts with the State's Long-Term Environmental Policies or Goals and Guidelines as Expressed in Chapter 344, Hawaii Revised Statutes**

   The State's Environmental Policy and Guidelines are set forth in Chapter 344, Hawaii Revised Statutes (HRS). The proposed action is in consonance with the policies and guidelines of Chapter 344, HRS. The use of approximately one (1) acre of vacant low-productivity agricultural lands for non-agricultural use is not deemed significant when compared to the public safety needs and protection of coastal waters

addressed by the repaired box culvert and embankment and construction of associated improvements.

4. **Substantially Affects the Economic Welfare or Social Welfare and Cultural Practices of the Community or State**

The proposed action would provide a direct, short-term economic benefit to the community during the construction phase. The proposed improvements will provide a reliable drainage system and prevent future road closures due to flood events during heavy rains. Also, measures to protect the embankments from erosion will improve water quality. There are no adverse long-term economic or social welfare impacts associated with the proposed action.

5. **Substantially Affects Public Health**

The repaired box culvert and embankment and construction of associated improvements will have a direct, positive impact to public health, as the improvements will repair existing drainage infrastructure and improve drainage under Haiku Road through Lilikoi Gulch. The proposed project is intended to prevent future erosion of the embankment below Haiku Road from stormwater runoff, future degradation of water quality, and future road closures. No adverse impacts to public health are anticipated to result from the proposed action.

6. **Involves Substantial Secondary Impacts, Such as Population Changes or Effects on Public Facilities**

The proposed action is a drainage improvement and is not deemed to be a population generator. There are also no anticipated adverse effects upon public services, such as police, medical, educational, or waste collection services. The proposed project is anticipated to have a positive impact on public facilities as the project would improve traffic circulation in the area along Haiku Road and avoid flooding during heavy rains by providing a reliable drainage system.

7. **Involves a Substantial Degradation of Environmental Quality**

During project implementation, appropriate BMPs will be utilized to mitigate potential adverse environmental impacts. The proposed project includes construction of an energy dissipator basin as a BMP mitigation measure to protect downstream waters from sediments. The proposed action will have no substantial impact to

environmental quality.

8. **Is Individually Limited but Cumulatively has Considerable Effect Upon the Environment or Involves a Commitment for Larger Actions**

The proposed action is an improvement to an existing drainage system and is not part of or linked to any larger action, nor will project implementation require a commitment to larger actions. The proposed project is designed to avoid flooding and protect water quality of the marine environment and is not anticipated to create any considerable adverse effect upon the environment.

9. **Substantially Affects a Rare, Threatened or Endangered Species or Its Habitat**

There are no identified rare, endangered, or threatened species or critical habitats within the project site or surrounding vicinity. Thus, there is no anticipated impact from the proposed action. Refer to **Appendix "D"**.

10. **Detrimentally Affects Air Quality or Water Quality or Ambient Noise Levels**

During the construction of the reconstructed culvert and associated improvements, there may be short-term impacts to air and noise quality. Appropriate BMPs will be implemented to minimize these short-term impacts, which will not extend into the long term. No adverse impacts to water quality are anticipated since the improvements will prevent erosion of the embankments and the release of sediments into stormwater runoff.

11. **Affects or is Likely to Suffer Damage by Being Located in an Environmentally Sensitive Areas, Such as a Flood Plain, Tsunami Zone, Beach, Erosion-prone Area, Geologically Hazardous Land, Estuary, Fresh Water or Coastal Waters**

The project site is not located within and the proposed project would not affect environmentally sensitive areas. The project is not located in any special flood zone. In addition, the subject property is located beyond the reaches of the tsunami inundation zones. The drainage improvements will restore an existing culvert and prevent future scouring in the gulch floor and embankment from runoff and prevent future damage to the existing drainage culvert.

Potential impacts downstream of the property will be mitigated through appropriate BMPs during construction-related activities, as well as the drainage improvements.

12. Substantially Affects Scenic Vistas and Viewplanes Identified in County Plans or Studies

The project site, including Haiku Road and the existing Lilikoi Gulch drainageway, is located below current view planes and is not deemed a scenic resource. The project site is also located 2.5 miles away from the shoreline and is not part of a scenic corridor to the shoreline. Therefore, the proposed action is not anticipated to result in substantive, adverse impacts to identified scenic vistas or viewplanes.

13. Require Substantial Energy Consumption

The proposed action will involve the short-term commitment of fuel for equipment, vehicles, and machinery during construction activities. However, this is not anticipated to result in any substantial consumption of energy. Upon completion of construction as a drainage improvement, there is no long-term commitment of fuel or energy resources.

In conclusion, based on the foregoing findings, the proposed action is anticipated to result in a Finding of No Significant Impact (FONSI).

VII. LIST OF PERMITS AND APPROVALS

VII. LIST OF PERMITS AND APPROVALS

The following permits and approvals will be required prior to the implementation of the project.

Federal

1. Department of the Army Permit

2. Compliance with Section 106 of the National Historic Preservation Act, as applicable

3. Compliance with Section 7; Endangered Species Act, as applicable

4. Compliance with Manguson-Stevens Fishery Conservation and Management Act, as applicable

State of Hawaii

1. Section 401 Water Quality Certification

2. Coastal Zone Management Consistency Approval

3. Stream Channel Alteration Permit

4. National Pollutant Discharge Elimination System (NPDES) Permit

5. Community Noise Permit, as applicable

County of Maui

1. Compliance with Chapter 343, Hawaii Revised Statutes

2. Construction Permits (grading, grubbing)

VIII. AGENCIES CONSULTED DURING THE PREPARATION OF THE DRAFT ENVIRONMENTAL ASSESSMENT; LETTERS RECEIVED; AND RESPONSES TO SUBSTANTIVE COMMENTS

VIII. AGENCIES CONSULTED DURING THE PREPARATION OF THE DRAFT ENVIRONMENTAL ASSESSMENT; LETTERS RECEIVED; AND RESPONSES TO SUBSTANTIVE COMMENTS

The following agencies were consulted during the preparation of the Draft Environmental Assessment. Comment letters received, as well as responses to substantive comments, are contained in this chapter.

1. Ranae Ganske-Cerizo, Soil Conservationist
Natural Resources Conservation Service
U.S. Department of Agriculture
77 Hookele Street, Suite 202
Kahului, Hawaii 96732

2. George Young
Chief, Regulatory Branch
U.S. Department of the Army
U.S. Army Engineer District, Honolulu
Regulatory Branch
Building 230
Fort Shafter, Hawaii 96858-5440

3. Loyal A. Mehrhoff, Field Supervisor
U. S. Fish and Wildlife Service
300 Ala Moana Blvd., Rm. 3-122
Box 50088
Honolulu, Hawaii 96813

4. Jan S. Gouveia, Acting Comptroller
Department of Accounting and General Services
1151 Punchbowl Street, #426
Honolulu, Hawaii 96813

5. Russell Kokubun, Chair
Department of Agriculture
1428 South King Street
Honolulu, Hawaii 96814-2512

6. Kalbert Young, Director
Department of Budget and Finance
P.O. Box 150
Honolulu, Hawaii 96810

7. Karen Seddon, Executive Director
Hawaii Housing Finance and Development Corporation
677 Queen Street
Honolulu, Hawaii 96813

8. Richard C. Lim, Director
State of Hawaii
Department of Business, Economic Development & Tourism
P.O. Box 2359
Honolulu, Hawaii 96804

9. Kathryn Matayoshi, Superintendent
State of Hawaii
Department of Education
P.O. Box 2360
Honolulu, Hawaii 96804

10. Heidi Meeker
Planning Division
Office of Business Services
Department of Education
c/o Kalani High School
4680 Kalanianaole Highway, #T-B1A
Honolulu, Hawaii 96821

11. Alapaki Nahale-a, Chairman
Department of Hawaiian Home Lands
P.O. Box 1879
Honolulu, Hawaii 96805

12. Loretta J. Fuddy, Director
State of Hawaii
Department of Health
919 Ala Moana Blvd., Room 300
Honolulu, Hawaii 96814

13. Alec Wong, P.E., Chief
Clean Water Branch
State of Hawaii
Department of Health
919 Ala Moana Blvd., Room 300
Honolulu, Hawaii 96814

14. Patti Kitkowski
District Environmental Health Program Chief
State of Hawaii
Department of Health
54 High Street
Wailuku, Hawaii 96793

15. Genevieve Salmonson, Acting Manager
Environmental Planning Office
Department of Health
919 Ala Moana Blvd., Suite 312
Honolulu, Hawaii 96814

16. Lene Ichinotsubo
Environmental Management Division
State of Hawaii
Department of Health
919 Ala Moana Blvd., Room 212
Honolulu, Hawaii 96814

17. William J. Aila, Jr., Chairperson
State of Hawaii
Department of Land and Natural Resources
P. O. Box 621
Honolulu, Hawaii 96809

18. Puaalaokalani Aiu, Administrator
State of Hawaii
Department of Land and Natural Resources
State Historic Preservation Division
601 Kamokila Blvd., Room 555
Kapolei, Hawaii 96707

19. Morgan Davis
Department of Land and Natural Resources
State Historic Preservation Division
130 Mahalani Street
Wailuku, Hawaii 96793

20. Glenn Okimoto, Director
State of Hawaii
Department of Transportation
869 Punchbowl Street
Honolulu, Hawaii 96813

21. Major General Darryll Wong, Director
Hawaii State Civil Defense
3949 Diamond Head Road
Honolulu, Hawaii 96813-4495

22. Gary Hooser, Director
Office of Environmental Quality Control
235 S. Beretania Street, Suite 702
Honolulu, Hawaii 96813

23. Clyde Nāmu`o, Administrator
Office of Hawaiian Affairs
711 Kapiolani Boulevard, Suite 500
Honolulu, Hawaii 96813

24. Jesse Souki, Director
State of Hawaii
Office of Planning
P. O. Box 2359
Honolulu, Hawaii 96804

25. Dan Davidson, Executive Officer
State of Hawaii
State Land Use Commission
P.O. Box 2359
Honolulu, Hawaii 96804

26. Alan Arakawa, Mayor
County of Maui
200 South High Street
Wailuku, Hawaii 96793

27. Teena Rasmussen, Coordinator
County of Maui
Office of Economic Development
2200 Main Street, Suite 305
Wailuku, Hawaii 96793

28. Anna Foust, Officer Management Officer
Maui Civil Defense Agency
200 South High Street
Wailuku, Hawaii 96793

29. Jeffrey A. Murray, Fire Chief
County of Maui
Department of Fire and Public Safety
200 Dairy Road
Kahului, Hawaii 96732

30. Jo-Ann Ridao, Director
County of Maui
Department of Housing and Human Concerns
One Main Plaza
2200 Main Street, Suite 546
Wailuku, Hawaii 96793

31. Glenn Correa, Director
County of Maui
Department of Parks and Recreation
700 Halia Nakoa Street, Unit 2
Wailuku, Hawaii 96793

32. William Spence, Director
County of Maui
Department of Planning
250 South High Street
Wailuku, Hawaii 96793

33. Gary Yabuta, Chief
County of Maui
Police Department
55 Mahalani Street
Wailuku, Hawaii 96793

34. Kyle Ginoza, Director
County of Maui
Department of Environmental Management
One Main Plaza
2200 Main Street, Suite 100
Wailuku, Hawaii 96793

35. Jo Anne Johnson Winer, Director
County of Maui
Department of Transportation
200 South High Street
Wailuku, Hawaii 96793

36. David Taylor, Director
County of Maui
Department of Water Supply
200 South High Street
Wailuku, Hawaii 96793

37. Honorable Danny Mateo, Council Chair
Maui County Council
200 South High Street
Wailuku, Hawaii 96793

38. Honorable Michael White
Maui County Council
200 South High Street
Wailuku, Hawaii 96793

39. Dan Takahata, Manager – Engineering
Maui Electric Company, Ltd.
P.O. Box 398
Kahului, Hawaii 96733

40. **Hawaiian Telcom**
60 South Church Street
Wailuku, Hawaii 96793

41. **Haiku Community Association**
P. O. Box 1036
Haiku, Hawaii 96708

FEB 03 2012

DEPARTMENT OF THE ARMY
U.S. ARMY CORPS OF ENGINEERS, HONOLULU DISTRICT
FORT SHAFTER, HAWAII 96858-5440

REPLY TO
ATTENTION OF:

February 2, 2012

Regulatory Branch

Corps File No. POH-2011-00335

Ms. Colleen Suyama
Munekiyo & Hiraga, Inc.
305 High Street, Suite 104
Wailuku, Hawaii 96793

Dear Ms. Suyama:

This letter is in response to your request for our comments on the draft Environmental Assessment (EA) for the proposed ***Haiku Road and Culvert Improvements Project*** located 600 feet east of the Kokomo Road and Haiku Road intersection in Haiku, Maui (TMK: (2) 2-7-003:056 (por), 2-7-017:047 (por), and 2-7-020:009 (por)). The proposed project involves grading work to repair the existing embankment and construct new embankments, reconstruction of a portion of the existing box culvert, construction of an outlet headwall, construction of an energy dissipater basin and grouted rip rap transition, installation of guard rails and pavement reconstruction, which will impact an approximate 1-acre site. The proposed project site and work description were reviewed pursuant to Section 10 of the Rivers and Harbors Act of 1899 (Section 10) and Section 404 of the Clean Water Act (Section 404).

Section 10 requires that a Department of the Army (DA) permit be obtained for certain structures or work in or affecting navigable waters of the United States (U.S.) prior to conducting the work (33 U.S.C. 403). Navigable waters of the U.S. are those waters subject to the ebb and flow of the tide shoreward to the mean high water mark, and/or other waters identified as navigable by the Honolulu District. In addition, a Section 10 permit is required for structures or work outside this limit if they affect the course, capacity, or condition of the water body.

Section 404 requires that a DA permit be obtained for the placement or discharge of dredged and/or fill material into waters of the U.S., including wetlands, prior to conducting the work (33 U.S.C. 1344). The area of the Corps' jurisdiction under Section 404 extends to the Ordinary High Water Mark (OHWM) for non-tidal waters, and to the upland boundary of any adjacent wetlands. Typical examples of projects involving discharges regulated under Section 404 include placement of fill material for impoundments, causeways, road fills, dams and dikes, riprap, groins, breakwaters, revetments, and beach nourishment. Section 404 also regulates discharges of dredged material incidental to certain activities such as grading, mechanized land-clearing, ditching or other excavation activities, and the installation of certain pile-supported structures.

Based on our review of the information you provided, the proposed project will likely result in impacts to Lilikoi Gulch, a tributary of Kuiaha Gulch that flows into the Pacific Ocean, which appears to be a water of the U.S. subject to Section 404. Therefore, the placement of fill material (i.e. the proposed concrete and/or rip-rap) below the ordinary high water mark may require a Department of the Army permit. As you finalize your EA and develop more detailed engineering and construction plans for the proposed project, the Corps recommends you take all appropriate and practicable steps to avoid and minimize impacts to waters of the U.S. For stream crossings and any adjacent wetlands that cannot be spanned or completely avoided, we recommended the County of Maui consider context sensitive design solutions that minimize direct and indirect impacts to the aquatic environment.

In addition, any regulated project activity will need to comply with Section 7 of the Endangered Species Act, the Manguson-Stevens Fishery Conservation and Management Act, and Section 106 of the National Historic Preservation Act. You most likely also need to obtain Section 401 water quality certification from the State of Hawaii, Department of Health, Clean Water Branch, and may need coastal zone management consistency from the State of Hawaii, Coastal Zone Program, prior to the Corps authorizing any work regulated under Section 404. When ready, please submit the required pre-construction notification information to our office so the Corps can verify whether the project complies with the terms and conditions of our nationwide permits. If impacts exceed the nationwide permit impact limit, an individual permit may be required. For additional DA permit information, please visit our website at http://www.poh.usace.army.mil/EC-R/EC-R.htm.

Thank you for the opportunity to review and comment for the preparation of your EA. If you need further assistance, please contact Ms. Emilee Stevens, Regulatory Biologist, by phone at (808) 438-2303 or by e-mail at emilee.r.stevens2@usace.army.mil and reference file number **POH-2011-00335**. If you would like to provide comments on your experience with the Corps' Honolulu District Regulatory Branch, please fill out our web-based customer survey form located at http://per2.nwp.usace.army.mil/survey.html.

Sincerely,

George P. Young, P.E.
Chief, Regulatory Branch

Copies Furnished:

Mr. Ed Chen, State of Hawaii, Department of Health, Clean Water Branch

MUNEKIYO & HIRAGA, INC.

MICHAEL T. MUNEKIYO
PRESIDENT

KARLYNN FUKUDA
EXECUTIVE VICE PRESIDENT

GWEN OHASHI HIRAGA
SENIOR VICE PRESIDENT

MITSURU "MICH" HIRANO
SENIOR VICE PRESIDENT

MARK ALEXANDER ROY
VICE PRESIDENT

June 25, 2012

George P. Young, P.E.
Chief, Regulatory Branch
U.S. Department of the Army
U.S. Army Corps of Engineers, Honolulu District
Attn: Regulatory Branch
Building 230
Fort Shafter, Hawaii 96858

SUBJECT: Response to Early Consultation Comment Letter Regarding the Proposed County of Maui Haiku Road and Culvert Improvements at TMK (2)2-7-003:056 (por), (2)2-7-017:047 (por) and (2)2-7-020:009 (por), Haiku, Maui, Hawaii (POH-2011-00335)

Dear Mr. Young:

Thank you for your letter of February 2, 2012 responding to our request for early consultation comments in preparation of a Draft Environmental Assessment (EA) for the proposed Haiku Road and Culvert Improvements. On behalf of the County of Maui, Department of Public Works (DPW), we offer the following information in response to your comments.

Response to Comments Regarding Permit Coverage

We acknowledge that the proposed project may require a Department of the Army (DA) Permit pursuant to Section 404 of the Clean Water Act. If required, an application for a DA permit will be submitted by Munekiyo & Hiraga, Inc. on behalf of the County of Maui, DPW for processing. In addition, an application for Section 401 Water Quality Certification will be filed with the State of Hawaii, Department of Health, Clean Water Branch, as well as an application for Coastal Zone Management Consistency with the State of Hawaii, Office of Planning. An application for Stream Channel Alteration Permit will also be filed for the project with the State of Hawaii, Commission on Water Resource Management. We also note that the proposed project will comply with Section 7 of the Endangered Species Act, the Manguson-Stevens Fishery Conservation and Management Act, and Section 106 of the National Historic Preservation Act, as applicable.

305 High Street, Suite 104 · Wailuku, Hawaii 96793 · ph: (808)244-2015 · fax: (808)244-8729 · planning@mhplanning.com · www.mhplanning.com

Thank you again for your participation in the Chapter 343, Hawaii Revised Statutes (HRS) review process. A copy of your letter will be included in the Draft EA. In the meantime, if there are any questions or if additional information is needed, please feel free to contact me at (808) 244-2015.

Very truly yours,

Colleen Suyama
Senior Associate

CS:tn
cc: Wendy Kobashigawa, Department of Public Works, Engineering Division
Scott Kunioka, Shimabukuro Endo & Yoshizaki, Inc.
K:\DATA\SEY\HaikuRoad\ECL Responses\DAresponse.ltr.doc

DEC 28 2011

NEIL ABERCROMBIE
GOVERNOR

JAN S. GOUVEIA
ACTING COMPTROLLER

KERRY K. YONESHIGE
ACTING DEPUTY COMPTROLLER

(P)1352.1

STATE OF HAWAI'I
DEPARTMENT OF ACCOUNTING AND GENERAL SERVICES
P.O. BOX 119, HONOLULU, HAWAI'I 96810-0119

DEC 27 2011

Ms Colleen Suyama
Munekiyo & Hiraga, Inc.
305 High Street, Suite 104
Wailuku, Hawaii 96793

Dear Ms Suyama:

Subject: Consultation Request for the Proposed County of Maui Haiku Road and Culvert Improvements at
TMK: (2) 2-7-003:056 (por), 2-7-017:047(por) and 2-7-020:009 (por)
Haiku, Maui, Hawaii

Thank you for the opportunity to provide comments for the subject project. This project does not impact any of the Department of Accounting and General Services' projects or existing facilities in the general area, and we have no comments to offer at this time.

If you have any questions, please call me at 586-0400 or have your staff call Mr. Alva Nakamura of the Public Works Division at 586-0488.

Sincerely,

JAN S. GOUVEIA
Acting State Comptroller

5

MUNEKIYO & HIRAGA, INC.

MICHAEL T. MUNEKIYO
PRESIDENT

KARLYNN FUKUDA
EXECUTIVE VICE PRESIDENT

GWEN OHASHI HIRAGA
SENIOR VICE PRESIDENT

MITSURU "MICH" HIRANO
SENIOR VICE PRESIDENT

MARK ALEXANDER ROY
VICE PRESIDENT

June 25, 2012

Dean H. Seki, State Comptroller
State of Hawaii
Department of Accounting and General Services
P.O. Box 119
Honolulu, Hawaii 96810-0119

SUBJECT: Response to Early Consultation Comment Letter Regarding the Proposed County of Maui Haiku Road and Culvert Improvements at TMK (2)2-7-003:056 (por), (2)2-7-017:047 (por) and (2)2-7-020:009 (por), Haiku, Maui, Hawaii

Dear Mr. Seki:

Thank you for your department's letter of December 27, 2011 responding to our request for early consultation comments in preparation of a Draft Environmental Assessment (EA) for the proposed Haiku Road and Culvert Improvements. On behalf of the County of Maui, Department of Public Works, we note that your department has no comments at this time.

Thank you again for your participation in the Chapter 343, Hawaii Revised Statutes (HRS) review process. A copy of your letter will be included in the Draft EA. In the meantime, if there are any questions or if additional information is needed, please feel free to contact me at (808) 244-2015.

Very truly yours,

Colleen Suyama
Senior Associate

CS:tn
cc: Wendy Kobashigawa, Department of Public Works, Engineering Division
Scott Kunioka, Shimabukuro Endo & Yoshizaki, Inc.
K:\DATA\SEY\HaikuRoad\ECL Responses\DAGSresponse.ltr.doc

305 High Street, Suite 104 · Wailuku, Hawaii 96793 · ph: (808)244-2015 · fax: (808)244-8729 · planning@mhplanning.com · www.mhplanning.com

DEC 27 2011

NEIL ABERCROMBIE
GOVERNOR

KALBERT K. YOUNG
DIRECTOR

LUIS P. SALAVERIA
DEPUTY DIRECTOR

STATE OF HAWAII
DEPARTMENT OF BUDGET AND FINANCE
P.O. BOX 150
HONOLULU, HAWAII 96810-0150

EMPLOYEES' RETIREMENT SYSTEM
HAWAII EMPLOYER-UNION HEALTH BENEFITS TRUST FUND
OFFICE OF THE PUBLIC DEFENDER
PUBLIC UTILITIES COMMISSION

ADMINISTRATIVE AND RESEARCH OFFICE
BUDGET, PROGRAM PLANNING AND MANAGEMENT DIVISION
FINANCIAL ADMINISTRATION DIVISION
OFFICE OF ECONOMIC RECOVERY AND REINVESTMENT (ARRA)

December 23, 2011

Ms. Colleen Suyama
Senior Associate
Munekiyo & Hiraga, Inc.
305 High Street, Suite 104
Wailuku, Hawaii 96793

Dear Ms. Suyama:

This is in response to your letter dated December 19, 2011, requesting comments for the environmental assessment regarding the development of the proposed County of Maui Haiku Road and Culvert Improvement project.

We have no comments at this time.

Aloha,

KALBERT K. YOUNG
Director of Finance

MUNEKIYO & HIRAGA, INC.

MICHAEL T. MUNEKIYO
PRESIDENT

KARLYNN FUKUDA
EXECUTIVE VICE PRESIDENT

GWEN OHASHI HIRAGA
SENIOR VICE PRESIDENT

MITSURU "MICH" HIRANO
SENIOR VICE PRESIDENT

MARK ALEXANDER ROY
VICE PRESIDENT

June 25, 2012

Kalbert K. Young, Director
State of Hawaii
Department of Budget and Finance
P.O. Box 150
Honolulu, Hawaii 96810-0150

SUBJECT: Response to Early Consultation Comment Letter Regarding the Proposed County of Maui Haiku Road and Culvert Improvements at TMK (2)2-7-003:056 (por), (2)2-7-017:047 (por) and (2)2-7-020:009 (por), Haiku, Maui, Hawaii

Dear Mr. Young:

Thank you for your letter of December 23, 2011 responding to our request for early consultation comments in preparation of a Draft Environmental Assessment (EA) for the proposed Haiku Road and Culvert Improvements. On behalf of the County of Maui, Department of Public Works, we note your department has no comments at this time.

Thank you again for your participation in the Chapter 343, Hawaii Revised Statutes (HRS) review process. A copy of your letter will be included in the Draft EA. In the meantime, if there are any questions or if additional information is needed, please feel free to contact me at (808) 244-2015.

Very truly yours,

Colleen Suyama
Senior Associate

CS:tn
cc: Wendy Kobashigawa, Department of Public Works, Engineering Division
Scott Kunioka, Shimabukuro Endo & Yoshizaki, Inc.
K:\DATA\SEY\HaikuRoad\ECL Responses\Budgetresponse.ltr.doc

305 High Street, Suite 104 · Wailuku, Hawaii 96793 · ph: (808)244-2015 · fax: (808)244-8729 · planning@mhplanning.com · www.mhplanning.com

NEIL ABERCROMBIE
GOVERNOR

JAN 05 2012

KATHRYN S. MATAYOSHI
SUPERINTENDENT

STATE OF HAWAI`I
DEPARTMENT OF EDUCATION
P.O. BOX 2360
HONOLULU, HAWAI`I 96804

OFFICE OF SCHOOL FACILITIES AND SUPPORT SERVICES

January 3, 2012

Ms. Colleen Suyama, Senior Associate
Munekiyo & Hiraga Inc.
305 High Street, Suite 104
Wailuku, Hawaii 96793

Dear Ms. Suyama:

Subject: Early Consultation for the Proposed Haiku Road and Culvert Improvements, Haiku, Maui

The Department of Education has no comment or concern.

Thank you for the opportunity to comment. If you have any questions, please call Heidi Meeker of the Facilities Development Branch at (808) 377-8301.

Sincerely yours,

Duane Y. Kashiwai
Public Works Administrator

DYK:jmb

c: Bruce Anderson, CAS, Baldwin/Kekaulike/Maui Complex Areas

9

MUNEKIYO & HIRAGA, INC.

MICHAEL T. MUNEKIYO
PRESIDENT

KARLYNN FUKUDA
EXECUTIVE VICE PRESIDENT

GWEN OHASHI HIRAGA
SENIOR VICE PRESIDENT

MITSURU "MICH" HIRANO
SENIOR VICE PRESIDENT

MARK ALEXANDER ROY
VICE PRESIDENT

June 25, 2012

Duane Y. Kashiwai
State of Hawaii
Public Works Administrator
Department of Education
P.O. Box 2360
Honolulu, Hawaii 96804

SUBJECT: Response to Early Consultation Comment Letter Regarding the Proposed County of Maui Haiku Road and Culvert Improvements at TMK (2)2-7-003:056 (por), (2)2-7-017:047 (por) and (2)2-7-020:009 (por), Haiku, Maui, Hawaii

Dear Mr. Kashiwai:

Thank you for your letter of January 3, 2012 responding to our request for early consultation comments in preparation of a Draft Environmental Assessment (EA) for the proposed Haiku Road and Culvert Improvements. On behalf of the County of Maui, Department of Public Works, we note that your department has no comments at this time.

Thank you again for your participation in the Chapter 343, Hawaii Revised Statutes (HRS) review process. A copy of your letter will be included in the Draft EA. In the meantime, if there are any questions or if additional information is needed, please feel free to contact me at (808) 244-2015.

Very truly yours,

Colleen Suyama
Senior Associate

CS:tn
cc: Wendy Kobashigawa, Department of Public Works, Engineering Division
Scott Kunioka, Shimabukuro Endo & Yoshizaki, Inc.
K:\DATA\SEY\HaikuRoad\ECL Responses\PublicWorksresponse.ltr.doc

305 High Street, Suite 104 · Wailuku, Hawaii 96793 · ph: (808)244-2015 · fax: (808)244-8729 · planning@mhplanning.com · www.mhplanning.com

NEIL ABERCROMBIE
GOVERNOR
STATE OF HAWAI'I

JAN 11 2012

ALBERT "ALAPAKI" NAHALE-A
CHAIRMAN
HAWAIIAN HOMES COMMISSION

MICHELLE K. KAUHANE
DEPUTY TO THE CHAIRMAN

M. WAIALEALE SARSONA
EXECUTIVE ASSISTANT

STATE OF HAWAI'I
DEPARTMENT OF HAWAIIAN HOME LANDS

P. O. BOX 1879
HONOLULU, HAWAI'I 96805

December 29, 2011

Colleen Suyama
Munekiyo & Hiraga, Inc.
305 High Street, Suite 104
Wailuku, Hawaii 96793

RE: EARLY CONSULTATION REQUEST FOR THE PROPOSED COUNTY OF MAUI HAIKU ROAD AND CULVERT IMPROVEMENTS
TMK: (2)2-7-003:056(POR), 2-7-017:047(POR), 2-7-020:009(POR), HAIKU, MAUI, HAWAII

Aloha Ms. Colleen,

Mahalo for the opportunity to provide information and/or comments prior to the Draft Environmental Assessment (DEA) for the proposed project by County of Maui, Department of Public Works to improve Haiku Road and repair the existing culvert under the roadway approximately 600 feet east of the Kokomo Road and Haiku Road intersection.

We have no information or comments at this time.

Please keep us informed and involved in the development of this DEA. If there are any questions, please contact Kaleo Manuel in our Planning Office at (808)620-9485 or Kaleo.L.Manuel@hawaii.gov.

Me ke aloha,

Albert "Alapaki" Nahale'a, Chairman
Hawaiian Homes Commission

MUNEKIYO & HIRAGA, INC.

MICHAEL T. MUNEKIYO
PRESIDENT

KARLYNN FUKUDA
EXECUTIVE VICE PRESIDENT

GWEN OHASHI HIRAGA
SENIOR VICE PRESIDENT

MITSURU "MICH" HIRANO
SENIOR VICE PRESIDENT

MARK ALEXANDER ROY
VICE PRESIDENT

June 25, 2012

Jobie Masagatani, Chairman
State of Hawaii
Hawaiian Homes Commission
P.O. Box 1879
Honolulu, Hawaii 96805

SUBJECT: Response to Early Consultation Comment Letter Regarding the Proposed County of Maui Haiku Road and Culvert Improvements at TMK (2)2-7-003:056 (por), (2)2-7-017:047 (por) and (2)2-7-020:009 (por), Haiku, Maui, Hawaii

Dear Ms. Masagatani:

Thank you for your department's letter of December 29, 2011 responding to our request for early consultation comments in preparation of a Draft Environmental Assessment (EA) for the proposed Haiku Road and Culvert Improvements. On behalf of the County of Maui, Department of Public Works, we note that your department has no comments at this time.

Thank you again for your participation in the Chapter 343, Hawaii Revised Statutes (HRS) review process. A copy of your letter will be included in the Draft EA. In the meantime, if there are any questions or if additional information is needed, please feel free to contact me at (808) 244-2015.

Very truly yours,

Colleen Suyama
Senior Associate

CS:tn
cc: Wendy Kobashigawa, Department of Public Works, Engineering Division
Scott Kunioka, Shimabukuro Endo & Yoshizaki, Inc.
K:\DATA\SEY\HaikuRoad\ECL Responses\HawnHomesresponse.ltr.doc

305 High Street, Suite 104 · Wailuku, Hawaii 96793 · ph: (808)244-2015 · fax: (808)244-8729 · planning@mhplanning.com · www.mhplanning.com

JAN 23 2012

NEIL ABERCROMBIE
GOVERNOR OF HAWAII

LORETTA J. FUDDY, A.C.S.W., M.P.H.
DIRECTOR OF HEALTH

STATE OF HAWAII
DEPARTMENT OF HEALTH
P. O. BOX 3378
HONOLULU, HI 96801-3378

In reply, please refer to:
EMD/CWB

01019PDCL.12

January 20, 2012

Ms. Colleen Suyama
Senior Associate
Munekiyo & Hiraga, Inc.
305 High Street, Suite 104
Wailuku, Hawaii 96793

Dear Ms. Suyama:

SUBJECT: Early Consultation Request for the Proposed County of Maui Haiku Road and Culvert Improvements at TMK: (2) 2-7-003:056 (Por.), (2) 2-7-017:047 (Por.) and (2) 2-7-020:009 (Por.), Haiku, Maui, Hawaii

The Department of Health, Clean Water Branch (CWB), has reviewed the subject document and offers these comments on your project. Please note that our review is based solely on the information provided in the subject document and its compliance with the Hawaii Administrative Rules (HAR), Chapters 11-54 and 11-55. You may be responsible for fulfilling additional requirements related to our program. We recommend that you also read our standard comments on our website at: http://www.hawaii.gov/health/environmental/env-planning/landuse/CWB-standardcomment.pdf.

1. Any project and its potential impacts to State waters must meet the following criteria:

   a. Antidegradation policy (HAR, Section 11-54-1.1), which requires that the existing uses and the level of water quality necessary to protect the existing uses of the receiving State water be maintained and protected.

   b. Designated uses (HAR, Section 11-54-3), as determined by the classification of the receiving State waters.

   c. Water quality criteria (HAR, Sections 11-54-4 through 11-54-8).

2. You may be required to obtain a National Pollutant Discharge Elimination System (NPDES) permit for discharges of wastewater, including storm water runoff, into State surface waters (HAR, Chapter 11-55). For the following types of discharges into Class A or Class 2 State waters, you may apply for an NPDES general permit coverage by submitting a Notice of Intent (NOI) form:

   a. Storm water associated with construction activities, including clearing, grading, and excavation, that result in the disturbance of equal to or greater than one (1)

acre of total land area. The total land area includes a contiguous area where multiple separate and distinct construction activities may be taking place at different times on different schedules under a larger common plan of development or sale. This includes areas used for a construction base yard and the storage of any construction related equipment, material, and waste products. An NPDES permit is required before the start of the construction activities.

b. Construction dewatering effluent.

You must submit a separate NOI form for each type of discharge at least 30 calendar days prior to the start of the discharge activity, except when applying for coverage for discharges of storm water associated with construction activity. For this type of discharge, the NOI must be submitted 30 calendar days before to the start of construction activities. The NOI forms may be picked up at our office or downloaded from our website at: http://www.hawaii.gov/health/environmental/water/cleanwater/forms/genl-index.html.

3. For other types of wastewater not listed in Item No. 2 above or wastewater discharging into Class 1 or Class AA waters, an NPDES individual permit will need to be obtained. An application for an NPDES individual permit must be submitted at least 180 calendar days before the commencement of the discharge. The NPDES application forms may be picked up at our office or downloaded from our website at http://hawaii.gov/health/environmental/water/cleanwater/forms/environmental/water/cleanwater/forms/indiv-index.html.

4. It is recommended that you consult with the Army Corp of Engineers, Regulatory Branch [Tel: (808) 438-9258] regarding their permitting requirements.

   Pursuant to Federal Water Pollution Control Act [commonly known as the "Clean Water Act" (CWA)], Paragraph 401(a)(1), a Section 401 Water Quality Certification (WQC) is required for "[a]ny applicant for Federal license or permit to conduct any activity including, but not limited to, the construction or operation of facilities, which may **result** in any discharge into the navigable waters..." (emphasis added). The term "discharge" is defined in CWA, Subsections 502(16), 502(12), and 502(6); Title 40 of the Code of Federal Regulations, Section 122.2; and Hawaii Administrative Rules (HAR), Chapter 11-54.

5. Please note that all discharges related to the project construction or operation activities, whether or not NPDES permit coverage and/or Section 401 WQC are required, must comply with the State's Water Quality Standards. Noncompliance with water quality requirements contained in HAR, Chapter 11-54, and/or permitting requirements, specified in HAR, Chapter 11-55, may be subject to penalties of $25,000 per day per violation.

If you have any questions, please visit our website at: http://www.hawaii.gov/health/environmental/water/cleanwater/index.html, or contact the Engineering Section, CWB, at (808) 586-4309.

Sincerely,

ALEC WONG, P.E., CHIEF
Clean Water Branch

DCL:ml

c: DOH-EPO #11-277 [via email only]

MUNEKIYO & HIRAGA, INC.

MICHAEL T. MUNEKIYO
PRESIDENT

KARLYNN FUKUDA
EXECUTIVE VICE PRESIDENT

GWEN OHASHI HIRAGA
SENIOR VICE PRESIDENT

MITSURU "MICH" HIRANO
SENIOR VICE PRESIDENT

MARK ALEXANDER ROY
VICE PRESIDENT

June 25, 2012

Alec Wong, P.E., Chief
State of Hawaii
Clean Water Branch
Department of Health
P.O. Box 3378
Honolulu, Hawaii 96801-3378

SUBJECT: Response to Early Consultation Comment Letter Regarding the Proposed County of Maui Haiku Road and Culvert Improvements at TMK (2)2-7-003:056 (por), (2)2-7-017:047 (por) and (2)2-7-020:009 (por), Haiku, Maui, Hawaii (EMD/CWB 01019PDCL.12)

Dear Mr. Wong:

Thank you for your letter of January 20, 2012 responding to our request for early consultation in preparation of a Draft Environmental Assessment (EA) for the proposed Haiku Road and Culvert Improvements project. On behalf of the County of Maui, Department of Public Works, we offer the following information in response to your comments, in the same order of your letter:

Response to Comment No. 1

If it is determined that the project will have a potential impact to State waters, the project will comply with the applicable criteria of Hawaii Administrative Rules (HAR), Section 11-54-1.1, 11-54-3 and 11-54-4 through 11-54-8.

Response to Comment Nos. 2 and 3

The applicable National Pollutant Discharge Elimination System (NPDES) permit(s) will be obtained for the project by its civil engineer prior to the initiation of construction.

Response to Comment No. 4

As recommended, consultation with the U.S. Army Corps of Engineers (USACE), Regulatory Branch has occurred through the Chapter 343, Hawaii Revised Statutes

305 High Street, Suite 104 · Wailuku, Hawaii 96793 · ph: (808)244-2015 · fax: (808)244-8729 · planning@mhplanning.com · www.mhplanning.com

(HRS) review process. During the early consultation period, the USACE provided comments on the project via letter dated February 2, 2012.
A copy of the Draft EA will also be forwarded to the USACE for review and comment.

Response to Comment No. 5

A Section 401 Water Quality Control permit in compliance with the State's Water Quality Standards will be obtained prior to the initiation of construction.

Thank you again for your participation in the Chapter 343, HRS review process. A copy of your letter will be included in the Draft EA. In the meantime, if there are any questions or if additional information is needed, please feel free to contact me at (808) 244-2015.

Very truly yours,

Colleen Suyama
Senior Associate

CS:tn
cc: Wendy Kobashigawa, Department of Public Works, Engineering Division
Scott Kunioka, Shimabukuro Endo & Yoshizaki, Inc.
K:\DATA\SEY\HaikuRoad\ECL Responses\DOHCWBresponse.ltr.doc

NEIL ABERCROMBIE
GOVERNOR OF HAWAII

DEC 28 2011

LORETTA J. FUDDY, A.C.S.W., M.P.H.
DIRECTOR OF HEALTH

LORRIN W. PANG, M.D., M.P.H.
DISTRICT HEALTH OFFICER

STATE OF HAWAII
DEPARTMENT OF HEALTH
MAUI DISTRICT HEALTH OFFICE
54 HIGH STREET
WAILUKU, HAWAII 96793

December 27, 2011

Ms. Colleen Suyama
Senior Associate
Munekiyo & Hiraga, Inc.
305 High Street, Suite 104
Wailuku, Hawaii 96793

Dear Ms. Suyama:

Subject: Early Consultation Request for the Proposed County of Maui Haiku Road and Culvert Improvements, Haiku, Maui, Hawaii
TMK: (2) 2-7-003:056 (por); 2-7-017:047(por); and 2-7-020:009 (por)

Thank you for the opportunity to review this project. We have the following comments to offer:

1. National Pollutant Discharge Elimination System (NPDES) permit coverage maybe required for this project.. The Clean Water Branch should be contacted at 808 586-4309.

2. The noise created during the construction phase of the project may exceed the maximum allowable levels as set forth in Hawaii Administrative Rules (HAR), Chapter 11-46, "Community Noise Control." A noise permit may be required and should be obtained before the commencement of work. The Indoor & Radiological Health Branch should be contacted at 808 586-4700.

It is strongly recommended that the Standard Comments found at the Department's website: http://hawaii.gov/health/environmental/env-planning/landuse/landuse.html be reviewed, and any comments specifically applicable to this project should be adhered to.

Should you have any questions, please call me at 808 984-8230 or E-mail me at patricia.kitkowski@doh.hawaii.gov.

Sincerely,

Patti Kitkowski

Patti Kitkowski
District Environmental Health Program Chief

c EPO

MUNEKIYO & HIRAGA, INC.

MICHAEL T. MUNEKIYO
PRESIDENT

KARILYNN FUKUDA
EXECUTIVE VICE PRESIDENT

GWEN OHASHI HIRAGA
SENIOR VICE PRESIDENT

MITSURU "MICH" HIRANO
SENIOR VICE PRESIDENT

MARK ALEXANDER ROY
VICE PRESIDENT

June 25, 2012

Patti Kitkowski, District Environmental
Health Program Chief
State of Hawaii
Department of Health
Maui District Health Office
54 High Street
Wailuku, Hawaii 96793

SUBJECT: Response to Early Consultation Comment Letter Regarding the Proposed County of Maui Haiku Road and Culvert Improvements at TMK (2)2-7-003:056 (por), (2)2-7-017:047 (por) and (2)2-7-020:009 (por), Haiku, Maui, Hawaii

Dear Ms. Kitkowski:

Thank you for your letter of December 27, 2011 responding to our request for early consultation comments in preparation of a Draft Environmental Assessment (EA) for the proposed Haiku Road and Culvert Improvements. On behalf of the County of Maui, Department of Public Works, we offer the following information in response to your comments:

Response to Comment No. 1

The Clean Water Branch has been consulted as part of the early consultation process. The applicable National Pollutant Discharge Elimination System (NPDES) permit(s) will be obtained for the project by its civil engineer prior to the initiation of construction.

Response to Comment No. 2

We note that pursuant to Hawaii Administrative Rules (HAR), Chapter 11-46, "Community Noise Control", a noise permit may be required for the project. As applicable, a noise permit will be secured by the project's civil engineer.

Further, as recommended, the Standard Comments found at the Department of Health's website will be reviewed by the project team.

305 High Street, Suite 104 · Wailuku, Hawaii 96793 · ph: (808)244-2015 · fax: (808)244-8729 · planning@mhplanning.com · www.mhplanning.com

Thank you again for your participation in the Chapter 343, Hawaii Revised Statutes (HRS) review process. A copy of your letter will be included in the Draft EA. In the meantime, if there are any questions or if additional information is needed, please feel free to contact me at 244-2015.

Very truly yours,

Colleen Suyama
Senior Associate

CS:tn
cc: Wendy Kobashigawa, Department of Public Works, Engineering Division
Scott Kunioka, Shimabukuro Endo & Yoshizaki, Inc.
K:\DATA\SEY\HaikuRoad\ECL Responses\DOHMauiresponse.ltr.doc

NEIL ABERCROMBIE
GOVERNOR OF HAWAII

WILLIAM J. AILA, JR.
CHAIRPERSON
BOARD OF LAND AND NATURAL RESOURCES
COMMISSION ON WATER RESOURCE MANAGEMENT

STATE OF HAWAII
DEPARTMENT OF LAND AND NATURAL RESOURCES
LAND DIVISION

POST OFFICE BOX 621
HONOLULU, HAWAII 96809

February 2, 2012

Munekiyo & Hiraga, Inc.
Attention: Ms. Colleen Suyama
Senior Associate
30 High Street, Suite 104
Wailuku, HI 96793

via email: colleen@mhplanning.com

Dear Ms. Suyama:

SUBJECT: Early Consultation Request for the Proposed County of Maui of Haiku Road and Culvert Improvements located in Haiku, Island of Maui; TMK: (2) 2-7-003:056 (por), 2-7-017:047 (por), and 2-7-020:009 (por)

Thank you for the opportunity to review and comment on the subject matter. The Department of Land and Natural Resources' (DLNR) Land Division distributed or made available a copy of your report pertaining to the subject matter to DLNR Divisions for their review and comments.

At this time, enclosed are comments from (a) Engineering Division; (b) Commission on Water Resource Management; and (c) Land Division - Maui District on the subject matter. Should you have any questions, please feel free to call Darlene Nakamura at 587-0417. Thank you.

Sincerely,

Russell Y. Tsuji
Land Administrator

Enclosures

NEIL ABERCROMBIE
GOVERNOR OF HAWAII

WILLIAM J. AILA, JR.
CHAIRPERSON
BOARD OF LAND AND NATURAL RESOURCES
COMMISSION ON WATER RESOURCE MANAGEMENT

STATE OF HAWAII
DEPARTMENT OF LAND AND NATURAL RESOURCES
LAND DIVISION

POST OFFICE BOX 621
HONOLULU, HAWAII 96809

January 13, 2012

RECEIVED
LAND DIVISION
2012 JAN 25 P 2:29
DEPT. OF LAND & NATURAL RESOURCES
STATE OF HAWAII

MEMORANDUM

TO: **DLNR Agencies:**
___Div. of Aquatic Resources
___Div. of Boating & Ocean Recreation
✓ X Engineering Division
___Div. of Forestry & Wildlife
___Div. of State Parks
X Commission on Water Resource Management
X Office of Conservation & Coastal Lands
X Land Division – Maui District
X Historic Preservation

FROM: Russell Y. Tsuji, Land Administrator
SUBJECT: Early Consultation Request for the Proposed County of Maui of Haiku Road and Culvert Improvements
LOCATION: Haiku, Island of Maui; TMK: (2) 2-7-003:056 (por), 2-7-017:047 (por), and 2-7-020:009 (por)
APPLICANT: Munekiyo & Hiraga, Inc. on behalf of the County of Maui

Transmitted for your review and comment on the above referenced document. We would appreciate your comments on this document. Please submit any comments by January 25, 2012.

If no response is received by this date, we will assume your agency has no comments. If you have any questions about this request, please contact Darlene Nakamura at 587-0417. Thank you.

Attachments

( ) We have no objections.
( ) We have no comments.
(✓) Comments are attached.

Signed: _____
Date: 1/24/12

cc: Central Files

22

DEPARTMENT OF LAND AND NATURAL RESOURCES
ENGINEERING DIVISION

LD/DarleneNakamura
Ref.: EarlyConsultationHaikuRd&CulvertImprovements
Maui.550

COMMENTS

( ) We confirm that the project site, according to the Flood Insurance Rate Map (FIRM), is located in Flood Zone ___.

(X) Please take note that the project site, according to the Flood Insurance Rate Map (FIRM), is located in Flood Zone X. The Flood Insurance Program does not have any regulations for developments within Flood Zone X.

( ) Please note that the correct Flood Zone Designation for the project site according to the Flood Insurance Rate Map (FIRM) is ___.

( ) Please note that the project must comply with the rules and regulations of the National Flood Insurance Program (NFIP) presented in Title 44 of the Code of Federal Regulations (44CFR), whenever development within a Special Flood Hazard Area is undertaken. If there are any questions, please contact the State NFIP Coordinator, Ms. Carol Tyau-Beam, of the Department of Land and Natural Resources, Engineering Division at (808) 587-0267.

Please be advised that 44CFR indicates the minimum standards set forth by the NFIP. Your Community's local flood ordinance may prove to be more restrictive and thus take precedence over the minimum NFIP standards. If there are questions regarding the local flood ordinances, please contact the applicable County NFIP Coordinators below:

( ) Mr. Robert Sumitomo at (808) 768-8097 or Mr. Mario Siu Li at (808) 768-8098 of the City and County of Honolulu, Department of Planning and Permitting.
( ) Mr. Frank DeMarco at (808) 961-8042 of the County of Hawaii, Department of Public Works.
( ) Mr. Francis Cerizo at (808) 270-7771 of the County of Maui, Department of Planning.
( ) Ms. Wynne Ushigome at (808) 241-4890 of the County of Kauai, Department of Public Works.

( ) The applicant should include project water demands and infrastructure required to meet water demands. Please note that the implementation of any State-sponsored projects requiring water service from the Honolulu Board of Water Supply system must first obtain water allocation credits from the Engineering Division before it can receive a building permit and/or water meter.

( ) The applicant should provide the water demands and calculations to the Engineering Division so it can be included in the State Water Projects Plan Update.

( ) Additional Comments: _____

( ) Other: _____

Should you have any questions, please call Ms. Suzie S. Agraan of the Planning Branch at 587-0258.

Signed: _____
CARTY S. CHANG, CHIEF ENGINEER

Date: 1/24/12

1/20/12

NEIL ABERCROMBIE
GOVERNOR OF HAWAII

WILLIAM J. AILA, JR.
CHAIRPERSON
BOARD OF LAND AND NATURAL RESOURCES
COMMISSION ON WATER RESOURCE MANAGEMENT

STATE OF HAWAII
DEPARTMENT OF LAND AND NATURAL RESOURCES
LAND DIVISION

POST OFFICE BOX 621
HONOLULU, HAWAII 96809

RECEIVED
LAND DIVISION
2012 JAN 19 AM 10: 42

2012 JAN 26 A 10: 28

DEPT. OF LAND &
NATURAL RESOURCES
STATE OF HAWAII

January 13, 2012

MEMORANDUM

TO: **DLNR Agencies:**
__Div. of Aquatic Resources
__Div. of Boating & Ocean Recreation
X Engineering Division
__Div. of Forestry & Wildlife
__Div. of State Parks
X Commission on Water Resource Management
X Office of Conservation & Coastal Lands
X Land Division – Maui District
X Historic Preservation

FROM: Russell Y. Tsuji, Land Administrator
SUBJECT: Early Consultation Request for the Proposed County of Maui of Haiku Road and Culvert Improvements
LOCATION: Haiku, Island of Maui; TMK: (2) 2-7-003:056 (por), 2-7-017:047 (por), and 2-7-020:009 (por)
APPLICANT: Munekiyo & Hiraga, Inc. on behalf of the County of Maui

Transmitted for your review and comment on the above referenced document. We would appreciate your comments on this document. Please submit any comments by January 25, 2012.

If no response is received by this date, we will assume your agency has no comments. If you have any questions about this request, please contact Darlene Nakamura at 587-0417. Thank you.

Attachments

SCAP required for any work in stream bed or bank.

( ) We have no objections.
( ) We have no comments.
(✓) Comments are attached.

Signed: RKChong
Date: 1/24/12

cc: Central Files

FILE ID: Rpp.3427 6
DOC ID: 8667

24

NEIL ABERCROMBIE
GOVERNOR OF HAWAII

WILLIAM J. AILA, JR.
CHAIRPERSON
BOARD OF LAND AND NATURAL RESOURCES
COMMISSION ON WATER RESOURCE MANAGEMENT

RECEIVED
LAND DIVISION
2012 JAN 25 A 9:45
DEPT. OF LAND &
NATURAL RESOURCES
STATE OF HAWAII

2012 JAN 19 PM 12: 07

STATE OF HAWAII
DEPARTMENT OF LAND AND NATURAL RESOURCES
LAND DIVISION
POST OFFICE BOX 621
HONOLULU, HAWAII 96809

January 13, 2012

MEMORANDUM

TO: **DLNR Agencies:**
__Div. of Aquatic Resources
__Div. of Boating & Ocean Recreation
X Engineering Division
__Div. of Forestry & Wildlife
__Div. of State Parks
X Commission on Water Resource Management
X Office of Conservation & Coastal Lands
X Land Division – Maui District
X Historic Preservation

FROM: Russell Y. Tsuji, Land Administrator
SUBJECT: Early Consultation Request for the Proposed County of Maui of Haiku Road and Culvert Improvements
LOCATION: Haiku, Island of Maui; TMK: (2) 2-7-003:056 (por), 2-7-017:047 (por), and 2-7-020:009 (por)
APPLICANT: Munekiyo & Hiraga, Inc. on behalf of the County of Maui

Transmitted for your review and comment on the above referenced document. We would appreciate your comments on this document. Please submit any comments by January 25, 2012.

If no response is received by this date, we will assume your agency has no comments. If you have any questions about this request, please contact Darlene Nakamura at 587-0417. Thank you.

Attachments

( ) We have no objections.
(X) We have no comments.
( ) Comments are attached.

Signed: _____
Date: 1/23/12

cc: Central Files

25

MUNEKIYO & HIRAGA, INC.

MICHAEL T. MUNEKIYO
PRESIDENT

KARLYNN FUKUDA
EXECUTIVE VICE PRESIDENT

GWEN OHASHI HIRAGA
SENIOR VICE PRESIDENT

MITSURU "MICH" HIRANO
SENIOR VICE PRESIDENT

MARK ALEXANDER ROY
VICE PRESIDENT

June 25, 2012

Russell Y. Tsuji, Land Administrator
State of Hawaii
Department of Land and Natural Resources
Land Division
P.O. Box 621
Honolulu, Hawaii 96809

SUBJECT: Response to Early Consultation Comment Letter Regarding the Proposed County of Maui Haiku Road and Culvert Improvements at TMK (2)2-7-003:056 (por), (2)2-7-017:047 (por) and (2)2-7-020:009 (por), Haiku, Maui, Hawaii

Dear Mr. Tsuji:

Thank you for your letter of February 2, 2012 responding to our request for early consultation comments in preparation of a Draft Environmental Assessment (EA) for the proposed Haiku Road and Culvert Improvements. On behalf of the County of Maui, Department of Public Works, we offer the following information in response to comments provided by the Engineering Division, Commission on Water Resource Management and Land Division.

Response to Comments from Engineering Division

We note the Engineering Division's determination that the project site is located within Flood Zone X of the Flood Insurance Rate Map. We also note that the National Flood Insurance Program does not have any regulations for developments within Flood Zone X.

Response to Comments from Commission on Water Resource Management

We note the requirement of a Stream Channel Alteration Permit (SCAP) and confirm that an application for a SCAP will be prepared for the project and submitted to the Commission on Water Resource Management for review.

305 High Street, Suite 104 · Wailuku, Hawaii 96793 · ph: (808)244-2015 · fax: (808)244-8729 · planning@mhplanning.com · www.mhplanning.com

Response to Comments from Land Division

We note that the Land Division has no comments to offer at this time.

Thank you again for your participation in the Chapter 343, Hawaii Revised Statutes (HRS) review process. A copy of your letter will be included in the Draft EA. In the meantime, if there are any questions or if additional information is needed, please feel free to contact me at (808) 244-2015.

Very truly yours,

Colleen Suyama
Senior Associate

CS:tn
cc: Wendy Kobashigawa, Department of Public Works, Engineering Division
Scott Kunioka, Shimabukuro Endo & Yoshizaki, Inc.
K:\DATA\SEY\HaikuRoad\ECL Responses\DLNRLandresponse.ltr.doc

JAN 06 2012

NEIL ABERCROMBIE
GOVERNOR

GLENN M. OKIMOTO
DIRECTOR

Deputy Directors
JADE T. BUTAY
FORD N. FUCHIGAMI
RANDY GRUNE
JADINE URASAKI

STATE OF HAWAII
DEPARTMENT OF TRANSPORTATION
869 PUNCHBOWL STREET
HONOLULU, HAWAII 96813-5097

IN REPLY REFER TO:
STP 8.0698

December 28, 2011

Ms. Colleen Suyama
Senior Associate
Munekiyo & Hiraga, Inc.
305 High Street, Suite 104
Wailuku, Hawaii 96793

Dear Ms. Suyama:

Subject: Haiku Road and Culvert Improvements
Early Consultation for Draft Environmental Assessment (DEA)

Thank you for requesting the State Department of Transportation's (DOT) review of the subject project.

DOT understands the Maui County, Department of Public Works (DPW) is proposing to improve Haiku Road and repair the existing culvert under the roadway east of the Kokomo Road and Haiku Road intersection.

Given the project location and that vehicular accesses to the site are under Maui County jurisdiction, it is not expected to significantly impact the State highway facility. However, the DPW should be informed that a permit is required from DOT Highways Division, Maui District Office, to transport oversized and overweight equipment/loads within the State highway facilities.

DOT appreciates the opportunity to provide comments. If there are any other questions, including the need to meet with DOT Highways Division staff, please contact Mr. Elton Teshima of the DOT Statewide Transportation Planning Office at (808) 831-7978.

Very truly yours,

GLENN M. OKIMOTO, Ph.D.
Director of Transportation

28

MUNEKIYO & HIRAGA, INC.

MICHAEL T. MUNEKIYO
PRESIDENT

KARLYNN FUKUDA
EXECUTIVE VICE PRESIDENT

GWEN OHASHI HIRAGA
SENIOR VICE PRESIDENT

MITSURU "MICH" HIRANO
SENIOR VICE PRESIDENT

MARK ALEXANDER ROY
VICE PRESIDENT

June 25, 2012

Glenn M. Okimoto, Ph.D., Director
Department of Transportation
State of Hawaii
869 Punchbowl Street
Honolulu, Hawaii 96813-5097

SUBJECT: Respose to Early Consultation Comment Letter Regarding the Proposed County of Maui Haiku Road and Culvert Improvements at TMK (2)2-7-003:056 (por), (2)2-7-017:047 (por) and (2)2-7-020:009 (por), Haiku, Maui, Hawaii (STP 8.0698)

Dear Mr. Okimoto:

Thank you for your letter of December 28, 2011 responding to our request for early consultation comments in preparation of a Draft Environmental Assessment (EA) for the proposed Haiku Road and Culvert Improvements. By copy of this letter, the Department of Public Works will be made aware that the transport of oversized and overweight equipment and loads within State highway facilities may require a permit from the Department of Transportation Highways Division, Maui District.

Thank you again for your participation in the Chapter 343, Hawaii Revised Statutes (HRS) review process. A copy of your letter will be included in the Draft EA. In the meantime, if there are any questions or if additional information is needed, please feel free to contact me at (808) 244-2015.

Very truly yours,

Colleen Suyama
Senior Associate

CS:tn
cc: Wendy Kobashigawa, Department of Public Works, Engineering Division
Scott Kunioka, Shimabukuro Endo & Yoshizaki, Inc.
K:\DATA\SEY\HaikuRoad\ECL Responses\SDOTresponse.ltr.doc

From: Keola Lindsey <keolal@oha.org>
Sent: Thursday, January 19, 2012 8:22 AM
To: Colleen Suyama
Subject: Haiku Road and Culvert Improvements

Aloha Colleen: The Office of Hawaiian Affairs (OHA) is in receipt of your December 19, 2011 letter seeking comments ahead of a draft environmental assessment (DEA) which will be prepared to support improvements to Haiku Road (project) proposed by the County of Maui-Department of Public Works. Project activities will consist of grading to repair an existing embankment, construction of a new embankment, reconstruction of a portion of a culvert box, construction of an outlet headwall, energy dissipater basin with grouted riprap transition and installation of guardrails.

OHA has no substantive comments to offer at this time. Please send one electronic copy of the DEA to OHA attn: Compliance Monitoring Program when it becomes available. Should you have any questions, please feel free to contact me.

Thank you, Keola

Keola Lindsey
Office of Hawaiian Affairs
Compliance Monitoring Program
711 Kapiolani Boulevard
Honolulu, Hawaii 96813
keolal@oha.org (email)
(808) 594-0244 (office)

30

MUNEKIYO & HIRAGA, INC.

MICHAEL T. MUNEKIYO
PRESIDENT

KARLYNN FUKUDA
EXECUTIVE VICE PRESIDENT

GWEN OHASHI HIRAGA
SENIOR VICE PRESIDENT

MITSURU "MICH" HIRANO
SENIOR VICE PRESIDENT

MARK ALEXANDER ROY
VICE PRESIDENT

June 25, 2012

Mr. Keola Lindsey
State of Hawaii
Office of Hawaiian Affairs
Compliance Monitoring Program
711 Kapiolani Boulevard
Honolulu, Hawaii 96812

SUBJECT: Response to Early Consultation Comment Letter Regarding the Proposed County of Maui Haiku Road and Culvert Improvements at TMK (2)2-7-003:056 (por), (2)2-7-017:047 (por) and (2)2-7-020:009 (por), Haiku, Maui, Hawaii

Dear Mr. Lindsey:

Thank you for your email of January 19, 2012 responding to our request for early consultation comments in preparation of a Draft Environmental Assessment (EA) for the proposed Haiku Road and Culvert Improvements. On behalf of the County of Maui, Department of Public Works, we note that your office has no substantive comments at this time. We also note that the Office of Hawaiian Affairs (OHA) requests one (1) electronic copy of the Draft EA sent attention to OHA's Compliance Monitoring Program. An electronic copy of the Draft EA will be provided to OHA for review and comment when available.

305 High Street, Suite 104 · Wailuku, Hawaii 96793 · ph: (808)244-2015 · fax: (808)244-8729 · planning@mhplanning.com · www.mhplanning.com

Thank you again for your participation in the Chapter 343, Hawaii Revised Statutes (HRS) review process. A copy of your letter will be included in the Draft EA. In the meantime, if there are any questions or if additional information is needed, please feel free to contact me at (808) 244-2015.

Very truly yours,

Colleen Suyama
Senior Associate

CS:tn
cc: Wendy Kobashigawa, Department of Public Works, Engineering Division
Scott Kunioka, Shimabukuro Endo & Yoshizaki, Inc.
K:\DATA\SEY\HaikuRoad\ECL Responses\OHAresponse.ltr.doc

JAN 1 1 2012

ALAN M. ARAKAWA
Mayor

TEENA M. RASMUSSEN
Economic Development Director

OFFICE OF ECONOMIC DEVELOPMENT
COUNTY OF MAUI
2200 MAIN STREET, SUITE 305, WAILUKU, MAUI, HAWAII 96793, USA
Telephone: (808) 270-7710 • Facsimile: (808) 270-7995 • Email: economic.development@mauicounty.gov

January 9, 2012

Munekiyo & Hiraga, Inc.
305 High Street, Ste. 104
Wailuku, HI 96793

Subject: Early Consultation Request for the proposed County of Maui Haiku Road and Culvert improvements at TMK 2-2-7-003:056 (por), 2-7-017:047 (por) and 2-7-020:009 (por), Haiku, Maui, Hawaii

To Whom It May Concern;

The Maui County Office of Economic Development is in favor of this project and believes it is a necessary improvement to the infrastructure in this area.

Sincerely,

Teena M. Rasmussen

Teena M. Rasmussen
Director
Office of Economic Development

33

MUNEKIYO & HIRAGA, INC.

MICHAEL T. MUNEKIYO
PRESIDENT

KARLYNN FUKUDA
EXECUTIVE VICE PRESIDENT

GWEN OHASHI HIRAGA
SENIOR VICE PRESIDENT

MITSURU "MICH" HIRANO
SENIOR VICE PRESIDENT

MARK ALEXANDER ROY
VICE PRESIDENT

June 25, 2012

Teena M. Rasmussen, Director
County of Maui
Office of Economic Development
2200 Main Street, Suite 305
Wailuku, Hawaii 96793

SUBJECT: Response to Early Consultation Comment Letter Regarding the Proposed County of Maui Haiku Road and Culvert Improvements at TMK (2)2-7-003:056 (por), (2)2-7-017:047 (por) and (2)2-7-020:009 (por), Haiku, Maui, Hawaii

Dear Ms. Rasmussen:

Thank you for your letter of January 9, 2012 responding to our request for early consultation comments in preparation of a Draft Environmental Assessment (EA) for the proposed Haiku Road and Culvert Improvements. On behalf of the County of Maui, Department of Public Works, we note that your office is supportive of this project as it is a necessary improvement in the area.

Thank you again for your participation in the Chapter 343, Hawaii Revised Statutes (HRS) review process. A copy of your letter will be included in the Draft EA. In the meantime, if there are any questions or if additional information is needed, please feel free to contact me at 244-2015.

Very truly yours,

Colleen Suyama
Senior Associate

CS:tn
cc: Wendy Kobashigawa, Department of Public Works, Engineering Division
Scott Kunioka, Shimabukuro Endo & Yoshizaki, Inc.
K:\DATA\SEY\HaikuRoad\ECL Responses\OEDresponse.ltr.doc

Subject: FW: Haiku Road and Culvert improvements...

From: Paul Haake
Sent: Friday, March 09, 2012 1:15:10 PM (UTC-10:00) Hawaii
To: Colleen Suyama
Subject: Haiku Road and Culvert improvements...

Hi Colleen,

I apologize for the late response. In our response there is one request, but since this is a County project, I'm sure it will be addressed in the design.

Thanks,

Paul

****

March 9, 2012

Collen Suyama
Munekiyo & Hiraga, Inc.
305 High St. Ste. 104
Wailuku, HI 96793

Re: Early Consultation for draft Environmental Assessment
Haiku Road and Culvert Improvements
TMK: (2) 2-7-003: 056 (por), 2-7-017: 047 (por), 2-7-020: 009 (por)

Dear Colleen:

Thank for the allowing the Department of Fire and Public Safety the opportunity to comment on the subject draft EA. At this time, our office has no specific comments regarding the EA.

Our office does request that the minimum clear width of the road after repair be at least 20 feet (the minimum width for fire apparatus access) to allow for fire apparatus access.

If there are any questions or comments, please feel free to contact me at 244-9161 ext. 23.

Sincerely,

Paul Haake
Captain, Fire Prevention Bureau
Department of Fire and Public Safety, Maui County

MUNEKIYO & HIRAGA, INC.

MICHAEL T. MUNEKIYO
PRESIDENT

KARLYNN FUKUDA
EXECUTIVE VICE PRESIDENT

GWEN OHASHI HIRAGA
SENIOR VICE PRESIDENT

MITSURU "MICH" HIRANO
SENIOR VICE PRESIDENT

MARK ALEXANDER ROY
VICE PRESIDENT

June 25, 2012

Paul Haake, Captain
County of Maui
Fire Prevention Bureau
Department of Fire and Public Safety
200 Dairy Road
Kahului, Hawaii 96732

SUBJECT: Response to Early Consultation Comment Letter Regarding the Proposed County of Maui Haiku Road and Culvert Improvements at TMK (2)2-7-003:056 (por), (2)2-7-017:047 (por) and (2)2-7-020:009 (por), Haiku, Maui, Hawaii

Dear Captain Haake:

Thank you for your e-mail of March 9, 2012 responding to our request for early consultation comments in preparation of a Draft Environmental Assessment (EA) for the proposed Haiku Road and Culvert Improvements. On behalf of the County of Maui, Department of Public Works (DPW), we offer the following information in response to your comments.

A copy of your e-mail has been forwarded to the DPW as well as the project's civil engineer. Following completion of the project, the road width in the repaired area of Haiku Road will be a minimum of 20 feet.

305 High Street, Suite 104 · Wailuku, Hawaii 96793 · ph: (808)244-2015 · fax: (808)244-8729 · planning@mhplanning.com · www.mhplanning.com

Thank you again for your participation in the Chapter 343, Hawaii Revised Statutes (HRS) review process. A copy of your letter will be included in the Draft EA. In the meantime, if there are any questions or if additional information is needed, please feel free to contact me at 244-2015.

Very truly yours,

Colleen Suyama
Senior Associate

CS:tn
cc: Wendy Kobashigawa, Department of Public Works, Engineering Division
Scott Kunioka, Shimabukuro Endo & Yoshizaki, Inc.
K:\DATA\SEY\HaikuRoad\ECL Responses\MFD response.ltr.doc

DEPARTMENT OF
HOUSING AND HUMAN CONCERNS
HOUSING DIVISION
COUNTY OF MAUI

ALAN M. ARAKAWA
Mayor
JO-ANN T. RIDAO
Director
JAN SHISHIDO
Deputy Director

35 LUNALILO STREET, SUITE 102 • WAILUKU, HAWAII 96793 • PHONE (808) 270-7351 • FAX (808) 270-6284

DEC 27 2011

December 21, 2011

Ms. Colleen Suyama
Senior Associate
Munekiyo & Higara, Inc.
305 High Stree, Suite 104
Wailuku, Hawaii 96793

Dear Ms. Suyama:

**Subject: Early Consultation on the Proposed County of Maui Haiku Road and Culvert Improvements.
TMK (2)2-7-003:056 (por), 2-7-017:047 (por) and 2-7-020:009 (por), Haiku, Maui, Hawaii**

The Department has reviewed the request for Early Consultation for the above subject project. Based on our review, we have determined that the subject project is not subject to Chapter 2.96, Maui County Code. At the present time, the Department has no additional comments to offer.

Please call Mr. Veranio Tongson Jr. of our Housing Division at (808) 270-1741 if you have any questions.

Sincerely,

Wayde T. Oshiro

WAYDE T. OSHIRO
Housing Administrator

cc: Director of Housing and Human Concerns

MUNEKIYO & HIRAGA, INC.

MICHAEL T. MUNEKIYO
PRESIDENT

KARLYNN FUKUDA
EXECUTIVE VICE PRESIDENT

GWEN OHASHI HIRAGA
SENIOR VICE PRESIDENT

MITSURU "MICH" HIRANO
SENIOR VICE PRESIDENT

MARK ALEXANDER ROY
VICE PRESIDENT

June 25, 2012

Wayde T. Oshiro, Housing Administrator
County of Maui
Department of Housing and Human Concerns
35 Lunalilo Street, Suite 102
Wailuku, Hawaii 96793

SUBJECT: Response to Early Consultation Comment Letter Regarding the Proposed County of Maui Haiku Road and Culvert Improvements at TMK (2)2-7-003:056 (por), (2)2-7-017:047 (por) and (2)2-7-020:009 (por), Haiku, Maui, Hawaii

Dear Mr. Oshiro:

Thank you for your letter of December 21, 2011 responding to our request for early consultation comments in preparation of a Draft Environmental Assessment (EA) for the proposed Haiku Road and Culvert Improvements. On behalf of the County of Maui, Department of Public Works, we note your department's determination that the project is not subject to Chapter 2.96, Maui County Code, and that you do not have any additional comments.

Thank you again for your participation in the Chapter 343, Hawaii Revised Statutes (HRS) review process. A copy of your letter will be included in the Draft EA. In the meantime, if there are any questions or if additional information is needed, please feel free to contact me at 244-2015.

Very truly yours,

Colleen Suyama
Senior Associate

CS:tn
cc: Wendy Kobashigawa, Department of Public Works, Engineering Division
Scott Kunioka, Shimabukuro Endo & Yoshizaki, Inc.
K:\DATA\SEY\HaikuRoad\ECL Responses\DHHCresponse.ltr.doc

JAN 06 2012

ALAN M. ARAKAWA
Mayor

GLENN T. CORREA
Director

PATRICK T. MATSUI
Deputy Director

(808) 270-7230
FAX (808) 270-7934

DEPARTMENT OF PARKS & RECREATION

700 Hali'a Nakoa Street, Unit 2, Wailuku, Hawaii 96793

January 4, 2012

Colleen Suyama
Munekiyo & Hiraga, Inc.
305 High Street, Suite 104
Wailuku, Hi 96793

Dear Ms. Suyama:

SUBJECT: Early consultation request for the proposed County of Maui Haiku Road and Culvert Improvements at TMK (2)2-7-003:056 (por), 2-7-017:047 (por) and 2-7-020:009 (por), Haiku, Maui, Hawaii

Thank you for the opportunity to review the subject Draft Environmental Assessment. We have no comment or objection at this time.

Should you have any questions or concerns, please feel free to contact me, or Steve Grogan, Capital Improvements Project Coordinator, at stephen.grogan@co.maui.hi.us or 808-270-6158.

Sincerely,

GLENN T. CORREA
Director of Parks & Recreation

c: Robert Halvorson, Chief of Planning & Development

GTC:RH:sg

S:\PLANNING\Steve G\No Objections\No Comment -Haiku Road and Culvert Improvements.doc

MUNEKIYO & HIRAGA, INC.

MICHAEL T. MUNEKIYO
PRESIDENT

KARLYNN FUKUDA
EXECUTIVE VICE PRESIDENT

GWEN OHASHI HIRAGA
SENIOR VICE PRESIDENT

MITSURU "MICH" HIRANO
SENIOR VICE PRESIDENT

MARK ALEXANDER ROY
VICE PRESIDENT

June 25, 2012

Glenn T. Correa, Director
County of Maui
Department of Parks and Recreation
700 Hali`a Nakoa Street, Unit 2
Wailuku, Hawaii 96793

SUBJECT: Response to Early Consultation Comment Letter Regarding the Proposed County of Maui Haiku Road and Culvert Improvements at TMK (2)2-7-003:056 (por), (2)2-7-017:047 (por) and (2)2-7-020:009 (por), Haiku, Maui, Hawaii

Dear Mr. Correa:

Thank you for your letter of January 4, 2012 responding to our request for early consultation comments in preparation of a Draft Environmental Assessment (EA) for the proposed Haiku Road and Culvert Improvements. On behalf of the County of Maui, Department of Public Works, we note that your department has no comments at this time.

Thank you again for your participation in the Chapter 343, Hawaii Revised Statutes (HRS) review process. A copy of your letter will be included in the Draft EA. In the meantime, if there are any questions or if additional information is needed, please feel free to contact me at 244-2015.

Very truly yours,

Colleen Suyama
Senior Associate

CS:tn
cc: Wendy Kobashigawa, Department of Public Works, Engineering Division
Scott Kunioka, Shimabukuro Endo & Yoshizaki, Inc.
K:\DATA\SEY\HaikuRoad\ECL Responses\DPRresponse.ltr.doc

ALAN M. ARAKAWA
Mayor

WILLIAM R. SPENCE
Director

MICHELE CHOUTEAU McLEAN
Deputy Director

JAN 10 2012

COUNTY OF MAUI

DEPARTMENT OF PLANNING

January 5, 2012

Mrs. Colleen Suyama, Senior Associate
Munekiyo & Hiraga, Inc.
305 High Street, Suite 104
Wailuku, Hawaii 96793

Dear Mrs. Suyama:

SUBJECT: EARLY CONSULTATION REQUEST FOR THE PROPOSED COUNTY OF MAUI HAIKU ROAD AND CULVERT IMPROVEMENTS AT HAIKU, ISLAND OF MAUI, HAWAII TMK(S): (2) 2-7-003:056 (POR.), 2-7-017:047 (POR.), AND 2-7-020:009 (POR) (RFC 2011/0201)

The Department of Planning (Department) is in receipt of the above-referenced document. At this time, the Department has no comment to offer.

Thank you for your cooperation. Should you have any questions, please contact Staff Planner Paul Fasi at paul.fasi@mauicounty.gov or at (808) 270-7814.

Sincerely,

CLAYTON I. YOSHIDA, AICP
Planning Program Administrator

for WILLIAM SPENCE
Planning Director

xc: Paul F. Fasi, Staff Planner (PDF)
Project File
General File

WRS:CIY:PFF:rm
K:\WP_DOCS\PLANNING\RFC\2011\0201_HaikuRoad&CulvertImprovements\LTR1.doc

MUNEKIYO & HIRAGA, INC.

MICHAEL T. MUNEKIYO
PRESIDENT

KARLYNN FUKUDA
EXECUTIVE VICE PRESIDENT

GWEN OHASHI HIRAGA
SENIOR VICE PRESIDENT

MITSURU "MICH" HIRANO
SENIOR VICE PRESIDENT

MARK ALEXANDER ROY
VICE PRESIDENT

June 25, 2012

William Spence, Director
County of Maui
Department of Planning
250 S. High Street
Wailuku, Hawaii 96793

SUBJECT: Response to Early Consultation Comment Letter Regarding the Proposed County of Maui Haiku Road and Culvert Improvements at TMK (2)2-7-003:056 (por), (2)2-7-017:047 (por) and (2)2-7-020:009 (por), Haiku, Maui, Hawaii

Dear Mr. Spence:

Thank you for your letter of January 5, 2012 responding to our request for early consultation comments in preparation of a Draft Environmental Assessment (EA) for the proposed Haiku Road and Culvert Improvements. On behalf of the County of Maui, Department of Public Works, we note that your department has no comments at this time.

Thank you again for your participation in the Chapter 343, Hawaii Revised Statutes (HRS) review process. A copy of your letter will be included in the Draft EA. In the meantime, if there are any questions or if additional information is needed, please feel free to contact me at 244-2015.

Very truly yours,

Colleen Suyama
Senior Associate

CS:tn
cc: Wendy Kobashigawa, Department of Public Works, Engineering Division
Scott Kunioka, Shimabukuro Endo & Yoshizaki, Inc.
K:\DATA\SEY\HaikuRoad\ECL Responses\Planningresponse.ltr.doc

ALAN M. ARAKAWA
MAYOR

OUR REFERENCE

YOUR REFERENCE

POLICE DEPARTMENT

COUNTY OF MAUI

55 MAHALANI STREET
WAILUKU, HAWAII 96793
(808) 244-6400
FAX (808) 244-6411

GARY A. YABUTA
CHIEF OF POLICE

CLAYTON N.Y.W. TOM
DEPUTY CHIEF OF POLICE

January 10, 2012

Ms. Colleen Suyama
Senior Associate
Munekiyo & Hiraga, Inc.
305 High Street, Suite 104
Wailuku, HI 96793

Dear Ms. Suyama:

SUBJECT: Early Consultation Request for the Proposed County of Maui Haiku Road and Culvert Improvements at TMK (2) 2-7-003:056 (por), 2-7-017:047 (por) and 2-7-020:009 (por)

This is in response to the request for comments on the above subject.

We have reviewed the information submitted for this project and have submitted our comments and/or recommendations. Thank you for giving us the opportunity to comment on this project.

Very truly yours,

Assistant Chief Victor K. Ramos
for: Gary A. Yabuta
Chief of Police

c: William Spence, Planning Department

COPY

TO : GARY YABUTA, CHIEF OF POLICE, COUNTY OF MAUI

VIA : CHANNELS

FROM : STUART KUNIOKA, POLICE OFFICER III, COMMUNITY POLICING

SUBJECT : RESPONSE REGARDING THE PROPOSED COUNTY OF MAUI HAIKU ROAD AND CULVERT IMPROVEMENTS

Refer to Comments.
ACK. 01/09/12

This communication is submitted as a response to a request for early consultation comments for an environmental assessment by Ms. Colleen Suyamaof Munekiyo & Hiraga, Inc, regarding:

PROJECT	:	The Proposed County of Maui Haiku road and Culvert Improvements
TMK #	:	(2) 2-7-003:056(por), 2-7-017:047 (por) and 2-7-020:009 (por)

RESPONSE:

In review of the submitted documents, concerns from the police perspective are upon the safety of pedestrian and vehicular movement.

The specified project's location is on County Property, about 600 feet east of the intersection at Haiku Road and Kokomo Road in Haiku. The improvements will consist of grading work to repair the existing embankment, construct new embankments, reconstruction of a portion of the existing box culvert, construction of an outlet head wall, construction of an energy dissipater basin and grouted riprap transition, installation of guard rails and pavement reconstruction.

Some concerns when the improvements begin would be notifying motorist of the road work/road closure (i.e. Street Signs, Newspaper, Radio, etc.) and the use of traffic control (either by traffic signal or people conducting traffic control) to safely guide vehicles and/or pedestrians through road work / road closure at this location. Also to be considered is placing a sidewalk at this location, as the area is narrow and very little space to safely walk on the shoulder of the roadway. There are residences near this location, which is within walking distance to the Haiku Cannery and pedestrians have been seen walking in this area in the past.

For approval to submit.
1/10/12

CONCLUSION:

There are no other concerns in regards to pedestrian and vehicular movement.

RESPECTFULLY SUBMITTED,

KUNIOKA, STUART #11428
Police Officer III, Community Policing
01/04/12 @ 1111 HOURS

NO OTHER CONCERNS AT THIS TIME.

Sgt. [illegible]
1-6-12 @ 1530 HOURS

MUNEKIYO & HIRAGA, INC.

MICHAEL T. MUNEKIYO
PRESIDENT

KARLYNN FUKUDA
EXECUTIVE VICE PRESIDENT

GWEN OHASHI HIRAGA
SENIOR VICE PRESIDENT

MITSURU "MICH" HIRANO
SENIOR VICE PRESIDENT

MARK ALEXANDER ROY
VICE PRESIDENT

June 25, 2012

Chief Gary A. Yabuta
County of Maui
Police Department
55 Mahalani Street
Wailuku, Hawaii 96793

SUBJECT: Response to Early Consultation Comment Letter Regarding the Proposed County of Maui Haiku Road and Culvert Improvements at TMK (2)2-7-003:056 (por), (2)2-7-017:047 (por) and (2)2-7-020:009 (por), Haiku, Maui, Hawaii

Dear Chief Yabuta:

Thank you for your letter of January 10, 2012 responding to our request for early consultation comments in preparation of a Draft Environmental Assessment (EA) for the proposed Haiku Road and Culvert Improvements. On behalf of the County of Maui, Department of Public Works (DPW), we offer the following information in response to your comments:

Response to Comment Regarding Project Notification

The DPW, by copy of this letter, has been informed that notification of the proposed road work to motorists is recommended by the Police Department. Further, the use of traffic control during construction will also be considered by the DPW.

Response to Comment Regarding Sidewalk

The DPW will consider the placement of a sidewalk at this location. However, due to the limited right-of-way and lack of an existing sidewalk along Haiku Road, the placement of a new sidewalk within the limits of the project site may not be feasible.

305 High Street, Suite 104 · Wailuku, Hawaii 96793 · ph: (808)244-2015 · fax: (808)244-8729 · planning@mhplanning.com · www.mhplanning.com

Thank you again for your participation in the Chapter 343, Hawaii Revised Statutes (HRS) review process. A copy of your letter will be included in the Draft EA. In the meantime, if there are any questions or if additional information is needed, please feel free to contact me at 244-2015.

Very truly yours,

Colleen Suyama
Senior Associate

CS:tn
cc: Wendy Kobashigawa, Department of Public Works, Engineering Division
Scott Kunioka, Shimabukuro Endo & Yoshizaki, Inc.
K:\DATA\SEY\HaikuRoad\ECL Responses\MPDresponse.ltr.doc

ALAN M. ARAKAWA
Mayor

KYLE K. GINOZA, P.E.
Director

MICHAEL M. MIYAMOTO
Deputy Director

JAN 06 2012

TRACY TAKAMINE, P.E.
Solid Waste Division

ERIC NAKAGAWA, P.E.
Wastewater Reclamation Division

COUNTY OF MAUI
DEPARTMENT OF
ENVIRONMENTAL MANAGEMENT
2200 MAIN STREET, SUITE 100
WAILUKU, MAUI, HAWAII 96793

January 4, 2012

Ms. Colleen Suyama
Munekiyo & Hiraga, Inc.
305 High Street, Suite 104
Wailuku, Hawaii 96793

Dear Ms. Suyama,

SUBJECT: **Proposed County of Maui Haiku Road and Culvert Improvements Early Consultation Request TMK (2) 2-7-003:056 (POR.), 2-7-017:047 (POR.) AND 2-7-020:009 (POR.), Haiku, Maui, Hawaii**

We reviewed the subject application and have the following comments:

1. Solid Waste Division comments:

   a. None.

2. Wastewater Reclamation Division (WWRD) comments:

   a. None. There is no sewer in this area.

If you have any questions regarding this memorandum, please contact Mike Miyamoto at 270-8230.

Sincerely,

KYLE K. GINOZA, P.E.
Director of Environmental Management

MUNEKIYO & HIRAGA, INC.

MICHAEL T. MUNEKIYO
PRESIDENT

KARLYNN FUKUDA
EXECUTIVE VICE PRESIDENT

GWEN OHASHI HIRAGA
SENIOR VICE PRESIDENT

MITSURU "MICH" HIRANO
SENIOR VICE PRESIDENT

MARK ALEXANDER ROY
VICE PRESIDENT

June 25, 2012

Kyle K. Ginoza, P.E., Director
County of Maui
Department of Environmental Management
2200 Main Street, Suite 100
Wailuku, Hawaii 96793

SUBJECT: Response to Early Consultation Comment Letter Regarding the Proposed County of Maui Haiku Road and Culvert Improvements at TMK (2)2-7-003:056 (por), (2)2-7-017:047 (por) and (2)2-7-020:009 (por), Haiku, Maui, Hawaii

Dear Mr. Ginoza:

Thank you for your letter of January 4, 2012 responding to our request for early consultation comments in preparation of a Draft Environmental Assessment (EA) for the proposed Haiku Road and Culvert Improvements. We note that the Solid Waste and Wastewater Reclamation Divisions have no comments at this time.

Thank you again for your participation in the Chapter 343, Hawaii Revised Statutes (HRS) review process. A copy of your letter will be included in the Draft EA. In the meantime, if there are any questions or if additional information is needed, please feel free to contact me at 244-2015.

Very truly yours,

Colleen Suyama
Senior Associate

CS:tn
cc: Wendy Kobashigawa, Department of Public Works, Engineering Division
Scott Kunioka, Shimabukuro Endo & Yoshizaki, Inc.
K:\DATA\SEY\HaikuRoad\ECL Responses\DEMresponse.ltr.doc

JAN 0 3 2012

ALAN M. ARAKAWA
Mayor

JO ANNE JOHNSON-WINER
Director

MARC I. TAKAMORI
Deputy Director

Telephone (808) 270-7511

DEPARTMENT OF TRANSPORTATION

COUNTY OF MAUI
200 South High Street
Wailuku, Hawaii, USA 96793-2155

December 29, 2011

Ms. Colleen Suyama
Munekiyo & Hiraga Inc
305 High Street, Suite 104
Wailuku, Hawaii 96793

Subject: Haiku Road and Culvert Improvements

Dear Ms. Suyama,

Thank you for the opportunity to comment on this project. We have no comments to make at this time.

Please feel free to contact me if you have any questions.

Sincerely,

Marc Takamori
Deputy Director

MUNEKIYO & HIRAGA, INC.

MICHAEL T. MUNEKIYO
PRESIDENT

KARLYNN FUKUDA
EXECUTIVE VICE PRESIDENT

GWEN OHASHI HIRAGA
SENIOR VICE PRESIDENT

MITSURU "MICH" HIRANO
SENIOR VICE PRESIDENT

MARK ALEXANDER ROY
VICE PRESIDENT

June 25, 2012

Marc Takamori, Deputy Director
County of Maui
Department of Transportation
200 South High Street
Wailuku, Hawaii 96793

SUBJECT: Response to Early Consultation Comment Letter Regarding the Proposed County of Maui Haiku Road and Culvert Improvements at TMK (2)2-7-003:056 (por), (2)2-7-017:047 (por) and (2)2-7-020:009 (por), Haiku, Maui, Hawaii

Dear Mr. Takamori:

Thank you for your letter of December 29, 2011 responding to our request for early consultation comments in preparation of a Draft Environmental Assessment (EA) for the proposed Haiku Road and Culvert Improvements. On behalf of the County of Maui, Department of Public Works, we note that your department has no comments at this time.

Thank you again for your participation in the Chapter 343, Hawaii Revised Statutes (HRS) review process. A copy of your letter will be included in the Draft EA. In the meantime, if there are any questions or if additional information is needed, please feel free to contact me at 244-2015.

Very truly yours,

Colleen Suyama
Senior Associate

CS:tn
cc: Wendy Kobashigawa, Department of Public Works, Engineering Division
Scott Kunioka, Shimabukuro Endo & Yoshizaki, Inc.
K:\DATA\SEY\HaikuRoad\ECL Responses\CDOTresponse.ltr.doc

JAN 06 2012

ALAN M. ARAKAWA
Mayor

DAVID TAYLOR, P.E.
Director

PAUL J. MEYER
Deputy Director

DEPARTMENT OF WATER SUPPLY
COUNTY OF MAUI
200 SOUTH HIGH STREET
WAILUKU, MAUI, HAWAII 96793-2155
www.mauiwater.org

December 29, 2011

Ms. Colleen Suyama, Senior Associate
Munekiyo & Hiraga, Inc.
305 High Street, Suite 104
Wailuku, Hawaii 96793

Dear Ms. Suyama:

RE: Early Consultation for the Proposed County of Maui Haiku Road and Cullvert Improvements at TMK (2) 2-7-003:056 (por), 2-7-017:047 (por), and 2-7-020:009 (por), Haiku, Maui, Hawaii

Thank you for the opportunity to provide the following comment on the referenced project.

Source Availability
The site is served by the Department of Water Supply's (DWS) Haiku system. Water for the system comes from the Haiku aquifer which has a sustainable yield of 27-million gallons per day.

System Infrastructure
The site is served by 6-inch waterline; storage is provided by the 0.25-million gallon Haiku Kauhikoa tank.

Pollution Prevention
The site overlies the Haiku aquifer. The DWS' goal is to protect the integrity of surface and groundwater resources. To achieve this, mitigation measures must be implemented to prevent any potential water pollution related impacts. Best management practices for construction should, therefore, be applied during construction.

Conservation Measures
The DWS encourages the applicant to consider the use of non-potable water, if available, for dust control, irrigation, and other non-potable uses.

Impacts on DWS Systems
The project will not impact the DWS water system.

Should you have any questions, please contact Arnold Y. Imaye, Staff Planner, at Arnold.Imaye@co.maui.hi.us or 463-3107.

Sincerely,

David Taylor, P.E., Director
ayi
c: DWS Engineering Division
WRPD files

MUNEKIYO & HIRAGA, INC.

MICHAEL T. MUNEKIYO
PRESIDENT

KARLYNN FUKUDA
EXECUTIVE VICE PRESIDENT

GWEN OHASHI HIRAGA
SENIOR VICE PRESIDENT

MITSURU "MIGH" HIRANO
SENIOR VICE PRESIDENT

MARK ALEXANDER ROY
VICE PRESIDENT

June 25, 2012

David Taylor, P.E., Director
County of Maui
Department of Water Supply
200 S. High Street
Wailuku, Hawaii 96793

SUBJECT: Response to Early Consultation Comment Letter Regarding the Proposed County of Maui Haiku Road and Culvert Improvements at TMK (2)2-7-003:056 (por), (2)2-7-017:047 (por) and (2)2-7-020:009 (por), Haiku, Maui, Hawaii

Dear Mr. Taylor:

Thank you for your letter of December 29, 2011 responding to our request for early consultation comments in preparation of a Draft Environmental Assessment (EA) for the proposed Haiku Road and Culvert Improvements. On behalf of the County of Maui, Department of Public Works (DPW), we offer the following information in response to your comments in the same order of your letter.

Response to Comments Regarding Source Availability

We note the water source for this area is provided by the Department of Water Supply's (DWS) Haiku System which draws from the Haiku Aquifer. As the proposed project is limited to roadway and culvert improvements, water service will not be required by the project.

Response to Comment Regarding System Infrastructure

We note the existing DWS infrastructure in the area is a 6-inch waterline and the Haiku Kauhikoa Tank. The DPW will coordinate work within the project area with the DWS to ensure construction activity will not impact the existing waterline.

Response to Comments Regarding Pollution Prevention

As the project site overlies the Haiku aquifer, appropriate mitigation measures, including Best Management Practices, will be implemented to prevent potential water pollution related impacts during construction.

Response to Comments Regarding Conservation Measures

As recommended by DWS, the use of non-potable water, if available, for dust control, irrigation, and other non-potable uses will be considered by the DPW during project construction.

Response to Comments Regarding Impacts on DWS Systems

We note the DWS determination that the project will not impact the DWS water system.

Thank you again for your participation in the Chapter 343, Hawaii Revised Statutes (HRS) review process. A copy of your letter will be included in the Draft EA. In the meantime, if there are any questions or if additional information is needed, please feel free to contact me at 244-2015.

Very truly yours,

Colleen Suyama
Senior Associate

CS:tn
cc: Wendy Kobashigawa, Department of Public Works, Engineering Division
Scott Kunioka, Shimabukuro Endo & Yoshizaki, Inc.
K:\DATA\SEY\HaikuRoad\ECL Responses\DWSresponse.ltr.doc

Maui Electric Company, Ltd. • 210 West Kamehameha Avenue • PO Box 398 • Kahului, Maui, HI 96733-6898 • (808) 871-8461

FEB 03 2012

February 1, 2012

Mrs. Colleen Suyama
Munekiyo & Hiraga, Inc.
305 High Street, Suite 104
Wailuku, HI 96793

Subject: Early Consultation Request for the Proposed County of Maui Haiku Road and Culvert Improvements at TMK (2) 2-7-003:056 (por), 2-7-017:047 (por), and 2-7-020:009 (por)
Haiku Road
Haiku, Maui, Hawaii

Dear Mrs. Suyama,

Thank you for allowing us to comment on the Early Consultation Request for the subject project.

In reviewing our records and the information received, Maui Electric Company (MECO) may have facilities within the project area. We highly encourage the customer to submit survey and civil plans to us as soon as practical to verify the project's location requirements and address any possible relocations or conversions of our facilities.

Should you have any questions or concerns, please feel free to call Kelcie Kawamura at 871-2346.

Sincerely,

Ray Okazaki
Supervisor, Engineering

57

MUNEKIYO & HIRAGA, INC.

MICHAEL T. MUNEKIYO
PRESIDENT

KARLYNN FUKUDA
EXECUTIVE VICE PRESIDENT

GWEN OHASHI HIRAGA
SENIOR VICE PRESIDENT

MITSURU "MICH" HIRANO
SENIOR VICE PRESIDENT

MARK ALEXANDER ROY
VICE PRESIDENT

June 25, 2012

Ray Okazaki, Supervisor
Engineering
Maui Electric Company, Ltd.
P.O. Box 398
Kahului, Hawaii 96733

SUBJECT: Response to Early Consultation Comment Letter Regarding the Proposed County of Maui Haiku Road and Culvert Improvements at TMK (2)2-7-003:056 (por), (2)2-7-017:047 (por) and (2)2-7-020:009 (por), Haiku, Maui, Hawaii

Dear Mr. Okazaki:

Thank you for your letter of February 1, 2012 responding to our request for early consultation comments in preparation of a Draft Environmental Assessment (EA) for the proposed Haiku Road and Culvert Improvements. On behalf of the County of Maui, Department of Public Works (DPW), we offer the following information in response to your comments.

A copy of your letter has been forwarded to the DPW as well as the project's civil engineer. The project's civil engineer will coordinate with Maui Electric Company (MECO) to ensure necessary project information, including survey and civil plans, are provided to MECO.

305 High Street, Suite 104 · Wailuku, Hawaii 96793 · ph: (808)244-2015 · fax: (808)244-8729 · planning@mhplanning.com · www.mhplanning.com

Thank you again for your participation in the Chapter 343, Hawaii Revised Statutes (HRS) review process. A copy of your letter will be included in the Draft EA. In the meantime, if there are any questions or if additional information is needed, please feel free to contact me at 244-2015.

Very truly yours,

Colleen Suyama
Senior Associate

CS:tn
cc: Wendy Kobashigawa, Department of Public Works, Engineering Division
Scott Kunioka, Shimabukuro Endo & Yoshizaki, Inc.
K:\DATA\SEY\HaikuRoad\ECL Responses\MECOresponse.ltr.doc

IX. REFERENCES

IX. REFERENCES

Chinen, Jon J., The Great Mahele: Hawaii's Land Division of 1848, Honolulu: University of Hawaii Press, 1958.

County of Maui. (2010 March 24). "County of Maui 2030 General Plan Countywide Policy Plan." Retrieved from http://www.co.maui.hi.us/index.aspx?NID=420.

County of Maui, Paia-Haiku Community Plan, 1995.

County of Maui, Public Facilities Assessment Update, March 9, 2007.

County of Maui, Office of Economic Development, Maui County Data Book 2011, February 2012.

Department of Geography, University of Hawaii, Atlas of Hawaii, Third Edition, University of Hawaii Press, 1998.

Federal Emergency Management Agency, Flood Insurance Rate Map Community-Panel Number 150003/0428E, September 25, 2009.

MacKenzie, Melody Kapilialoha, Native Hawaiian Rights Handbook, Ed., Honolulu: Native Hawaiian Legal Corporation, Office of Hawaiian Affairs, University of Hawaii Press, 1991.

Minerbi, Luciano et al., Native Hawaiian and Local Cultural Assessment Project, Ed. University of Hawaii at Manoa, Honolulu: 1993.

SMS, Maui County Community Plan Update Program: Socio-Economic Forecast, June 2006.

State of Hawaii, Department of Labor and Industrial Relations (DLIR), Local Area Unemployment Statistics, http://www.hiwi.org, June 2012.

State of Hawaii, Hawaii State Plan, December 2011.

State of Hawaii, Commission on Water Resources Management, Hawaii Stream Assessment, A Preliminary Appraisal of Hawaii's Stream Resources, Report R84, December 1990.

State Land Use Commission, "State Land Use District Boundaries." [GIS polygon shapefile]. Digitized by Office of Planning using ArcInfo 4, 5, and 6 from State Land Use Commission's 1:24,000 mylar maps (2010). Retrieved from http://hawaii.gov/dbedt/gis/download.htm.

University of Hawaii, Land Study Bureau, Detailed Land Classification - Island of Maui, L.S.B. Bulletin No. 7, May 1967.

U.S. Department of Agriculture, Soil Conservation Service, Soil Survey of Islands of Kauai, Oahu, Maui, Molokai, and Lanai, State of Hawaii, U.S. Government Printing Office, 1972.

U.S. Census Bureau, Census 2010 Redistricting Data, Detailed Tables, Table H-1, Maui County and Maui County Block Groups, Retrieved from: http://factfinder2.census,gov/main.html

APPENDIX A.

Site Photographs

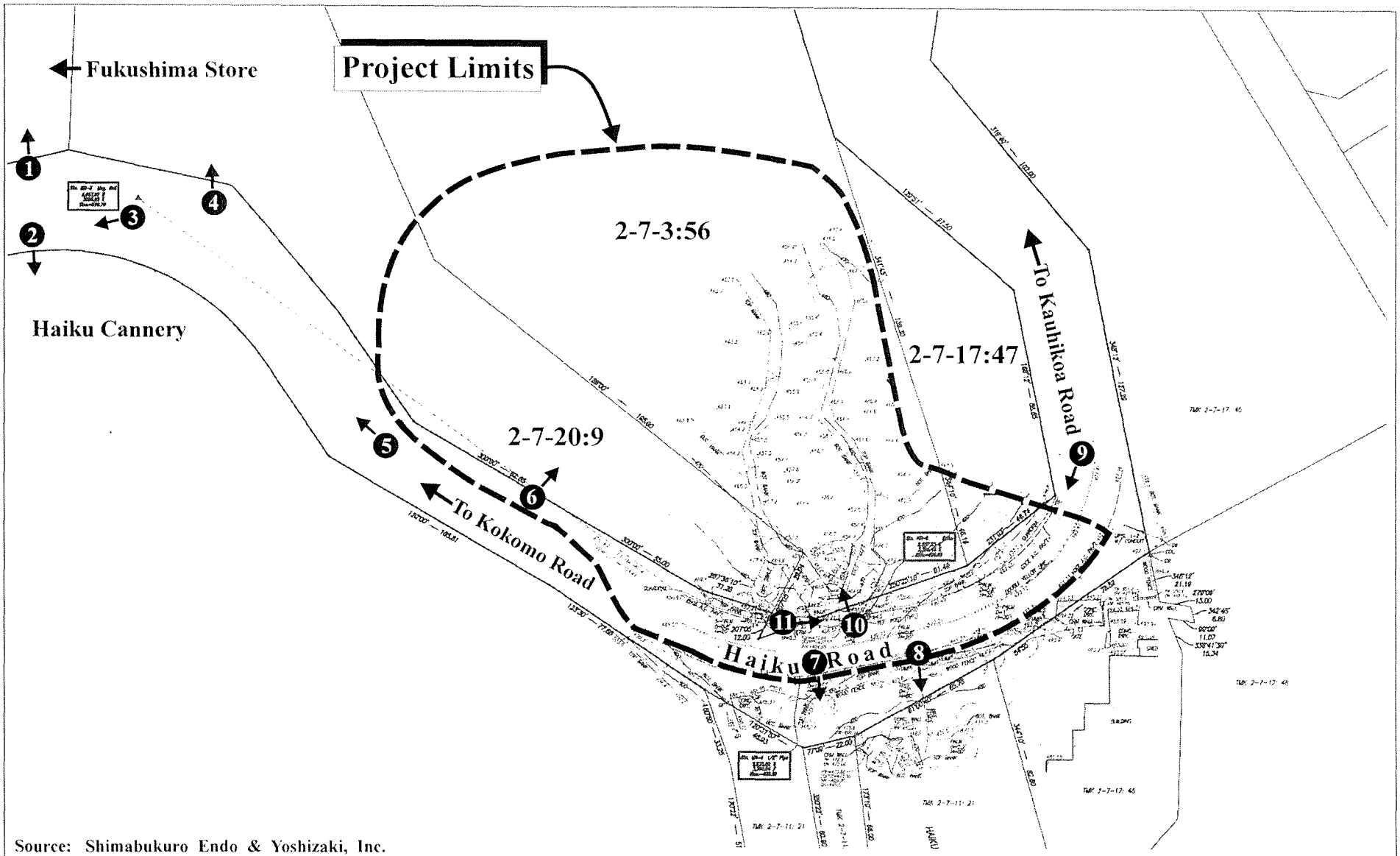

Source: Shimabukuro Endo & Yoshizaki, Inc.

Proposed Haiku Road and Culvert Improvements

Photographic Reference Map

NOT TO SCALE

Prepared for: County of Maui, Department of Public Works

MUNEKIYO & HIRAGA, INC.

SEY/HaikuRoad/photorefmap

Photo No. 1: View north of Fukushima Store

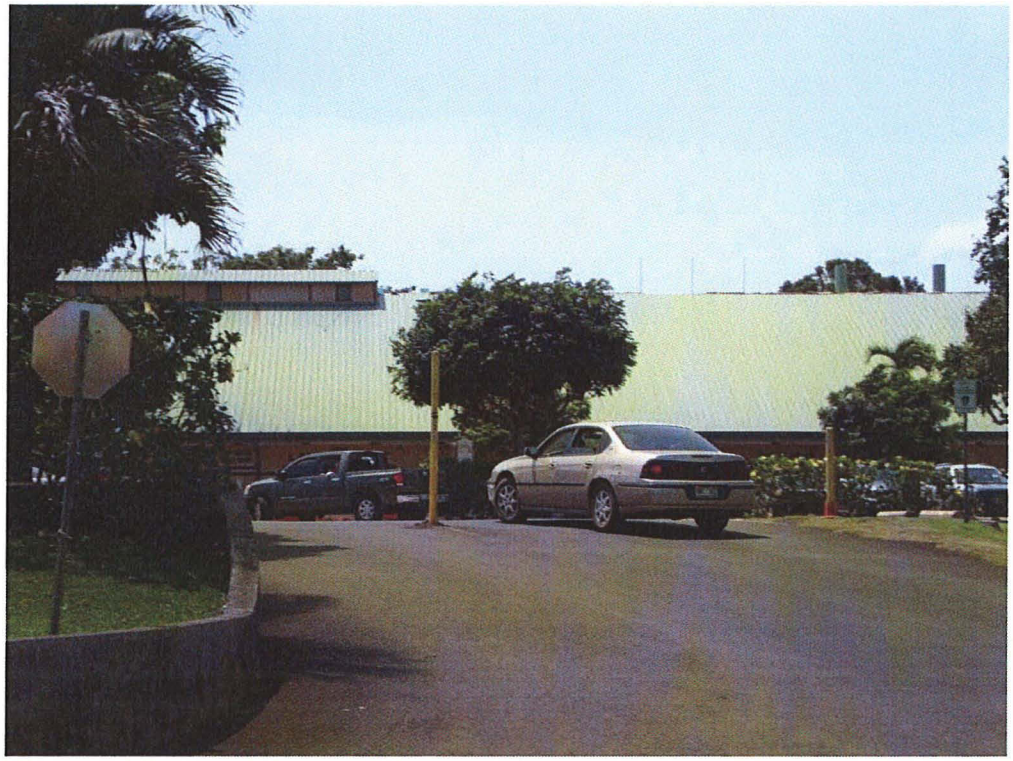

Photo No. 2: View south of Haiku Cannery

Photo No. 3: View west of Kokomo Road and Haiku Road intersection

Photo No. 4: View northwest of Fukushima Residence adjacent to Lilikoi Gulch

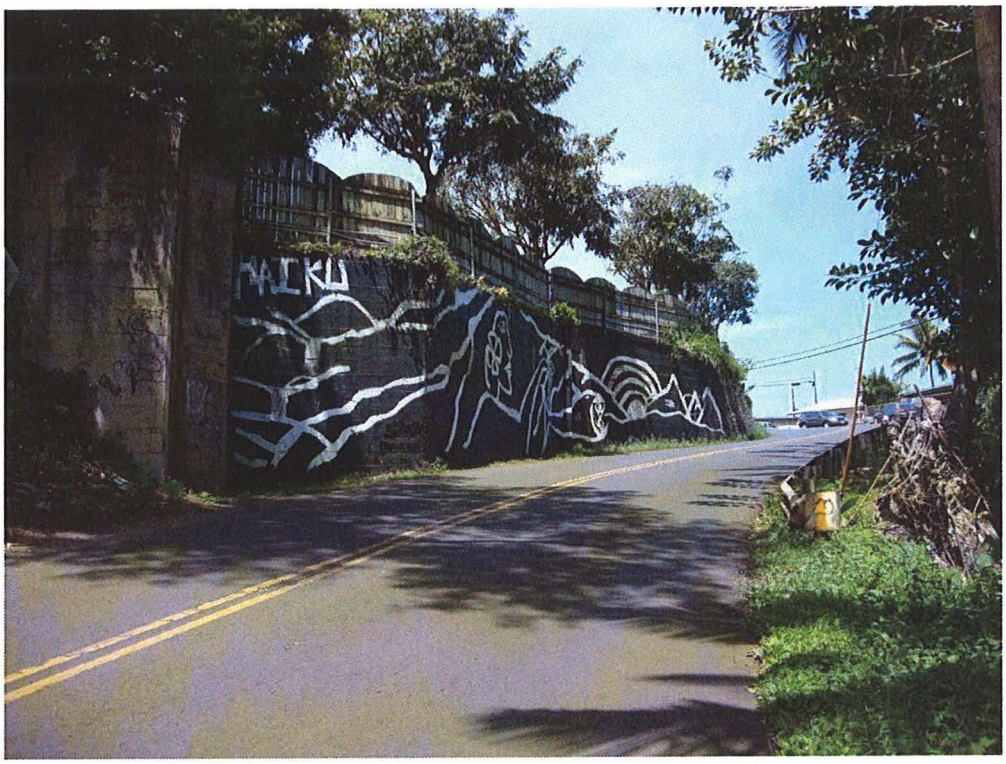

Photo No. 5: View northwest toward Fukushima Store

Photo No. 6: View into Lilikoi Gulch through Fukushima property

Photo No. 7: Gate and access to Lilikoi Gulch on south side Across Haiku Road and Project Site

Photo No. 8: View into south side of Lilikoi Gulch across Haiku Road and project site

Photo No. 9: View toward project site after third Palm tree

Photo No. 10: View north into Lilikoi Gulch with Remnant of Concrete Box Culvert

Photo No. 11: View of hanging guardrail at Eroded Embankment along north side of Haiku Road

APPENDIX B.

Preliminary Development Plans

COUNTY OF MAUI
DEPARTMENT OF PUBLIC WORKS
ENGINEERING DIVISION
WAILUKU, MAUI, HAWAII

PLANS FOR

HAIKU ROAD CULVERT REPLACEMENT

JOB NO. 08-11
DISTRICT OF MAKAWAO
ISLAND OF MAUI

PREFINAL SUBMITTAL
MARCH 2012

VICINITY MAP

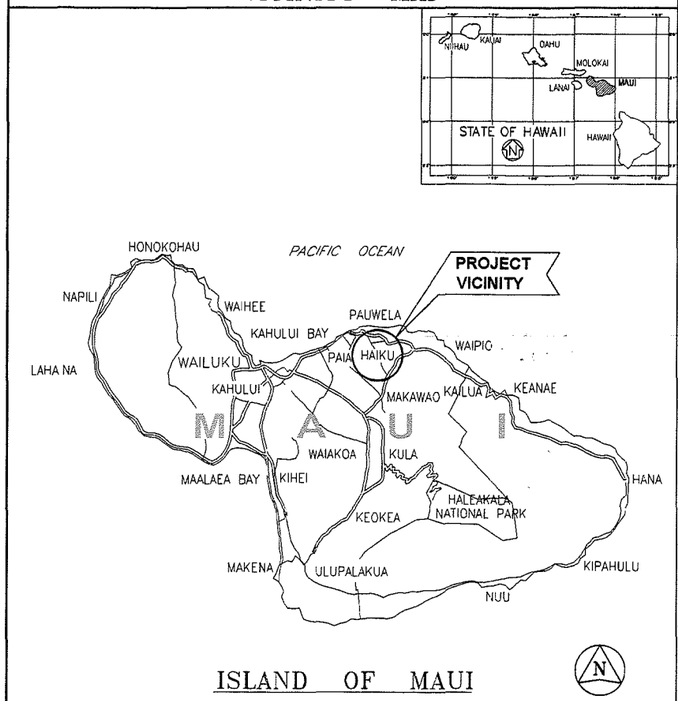

LOCATION MAP

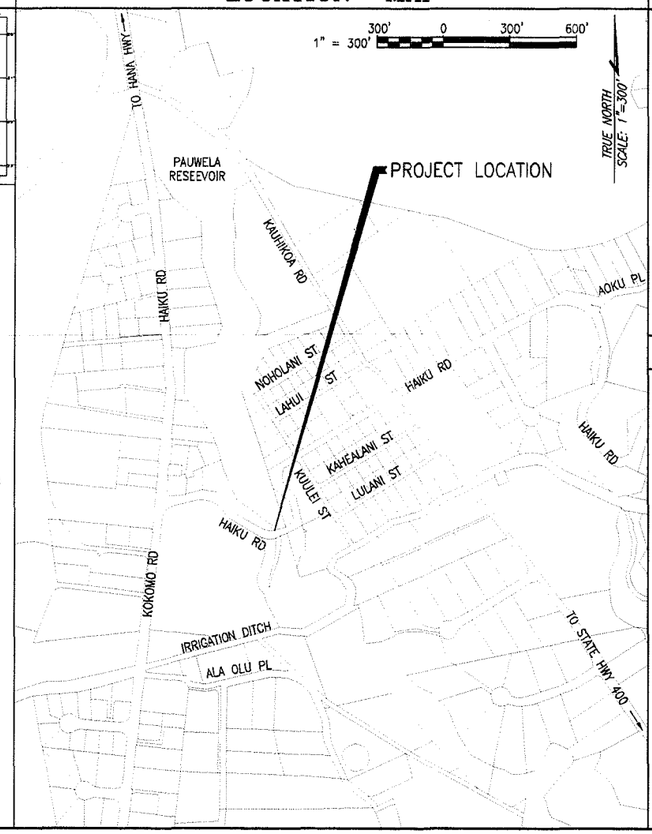

APPROVED BY

DIRECTOR, DEPARTMENT OF PUBLIC WORKS
COUNTY OF MAUI

DATE

DESIGN DESIGNATION

ADT (2007)	3,500
DESIGN ADT (2027)	4,900
DHV	500
D	58/42
T_{24}	1.0%
V	35 mph

INDEX OF DRAWINGS

SHT. NO.	SHEET	DESCRIPTION
1	T-1	TITLE SHEET, LOCATION MAP, AND INDEX TO DRAWINGS
2	G-1	GENERAL NOTES
3	G-2	EARTHWORK NOTES
4	G-3	EROSION CONTROL, BMP, & GRADING NOTES
5	G-4	BORING LOGS, LEGENDS, & ABBREVIATIONS
6	C-1	EXISTING CONDITIONS & BASELINE LAYOUT DATA
7	C-2	SITEWORK PLAN
8	C-3	PROFILE 1
9	C-4	PROFILE 2
10	C-5	SITE SECTIONS
11	C-6	18" PIPE DRAIN PLAN, SECTIONS & DETAILS
12	C-7	BEST MANAGEMENT PRACTICES PLAN
13	C-8	HAIKU ROAD CLOSURE PLAN
14	C-9	MISCELLANEOUS DETAILS
15	C-10	CROSS SECTIONS
16	C-11	GUARDRAIL DETAIL & NOTES
17	C-12	STRONG POST W-BEAM GUARDRAIL & FLARED RWEOIa
18	S0-1	STRUCTURAL GENERAL NOTES
19	S0-2	SITE PLAN
20	S0-3	DRILLED SHAFT
21	S0-4	TRIAL SHAFT DETAILS
22	S0-5	TYPICAL JOINT DETAILS
23	S0-6	TYPICAL DETAILS
24	S1-1	BOX CULVERT PLAN AND SECTION
25	S1-2	BOX CULVERT SECTIONS
26	S1-3	SECTIONS
27	S2-1	ENERGY DISSIPATOR BASIN PLAN AND SECTION
28	S2-2	SECTION
29	S2-3	SECTION
30	S2-4	SECTION
31	S2-5	SECTIONS
32	S3-1	GRATED DROP INLET PLAN AND SECTIONS
33	S3-2	FRAME AND GRATE TYPICAL DETAILS
34	S4-1	GROUTED RIPRAP PLAN
35	S4-2	SECTIONS
36	S4-3	SECTION

HAIKU ROAD CULVERT REPLACEMENT JOB # 08-11

04/04/12 1:53:24 PM S:\SAK\HAIKU CULVERT\DRAW\01 - TITLE SHEET.DWG

GENERAL NOTES:

1. THE SCOPE OF WORK FOR THIS PROJECT CONSISTS OF RECONSTRUCTING A PORTION OF AN EXISTING BOX CULVERT, CONSTRUCTING NEW ENERGY DISSIPATOR BASIN, GROUTED RIPRAP TRANSITION, AND 18" PIPE DRAIN WITH GRATED DROP INLET, REPAIRING AN EXISTING EMBANKMENT, RESTORING A PORTION OF DAMAGED HAIKU ROAD AND IMPROVEMENTS, AND INCIDENTALS.

2. THE CONTRACTOR IS REMINDED OF HAWAII STANDARD SPECIFICATIONS SUBSECTION 105.16 – SUBCONTRACTS WHICH REQUIRES HIM TO PERFORM WORK AMOUNTING TO NOT LESS THAN 30 PERCENT OF THE TOTAL CONTRACT COST LESS DEDUCTIBLE ITEMS. NONCOMPLIANCE WITH THIS SUBSECTION MAY BE GROUNDS FOR REJECTION OF BID.

3. THE CONTRACTOR'S ATTENTION IS DIRECTED TO THE FOLLOWING SECTIONS OF THE HAWAII STANDARD SPECIFICATIONS: SUBSECTION 107.06 – CONTRACTOR DUTY REGARDING PUBLIC CONVENIENCE; SUBSECTION 107.11 – SAFETY: ACCIDENT PREVENTION; SUBSECTION 107.12 – PROTECTION OF PERSONS AND PROPERTY; AND SUBSECTION 645 – WORK ZONE TRAFFIC CONTROL.

4. ALL WORK CALLED FOR ON THE PLANS AND NOT ITEMIZED IN THE PROPOSAL AND ALL WORK NOT CALLED FOR BUT REQUIRED FOR THE CONSTRUCTION OF THIS PROJECT SHALL BE CONSIDERED INCIDENTAL TO THE VARIOUS ITEMS LISTED IN THE PROPOSAL.

5. VERIFY AND CHECK ALL DIMENSIONS AND DETAILS SHOWN ON THE PLANS PRIOR TO THE START OF CONSTRUCTION. ANY DISCREPANCY SHALL BE IMMEDIATELY BROUGHT TO THE ATTENTION OF THE ENGINEER FOR CLARIFICATION.

6. ALL PERMITS NECESSARY FOR THE PROJECT SHALL BE OBTAINED BY THE CONTRACTOR AT HIS OWN COST.

7. THE CONTRACTOR SHALL COMPLY WITH THE STATE OF HAWAII' OCCUPATIONAL SAFETY AND HEALTH LAW (DOSH).

8. AT THE END OF EACH DAYS WORK, THE CONTRACTOR SHALL REMOVE ALL EQUIPMENT AND OTHER OBSTRUCTIONS TO PERMIT FREE AND SAFE PASSAGE OF PUBLIC TRAFFIC.

9. THE EXISTENCE AND LOCATION OF UNDERGROUND UTILITIES, MONUMENTS AND STRUCTURES AS SHOWN ON THE PLANS ARE FROM THE LATEST AVAILABLE DATA AND SHALL BE VERIFIED BY THE CONTRACTOR. THE ACCURACY IS NOT GUARANTEED. THE ENCOUNTERING OF OTHER OBSTACLES DURING THE COURSE OF WORK IS POSSIBLE. THE CONTRACTOR SHALL BE HELD LIABLE FOR THE RESTORATION OF ANY DAMAGES INCURRED TO THE EXISTING FACILITIES, IMPROVEMENTS, AND/OR OBSTACLES AS A RESULT OF HIS OPERATIONS.

10. THE CONTRACTOR SHALL NOTIFY THE ENGINEER IN WRITING 2 WEEKS PRIOR TO THE START OF CONSTRUCTION OPERATIONS.

11. PRECONSTRUCTION SURVEY AND MONITORING SHALL BE CONDUCTED BY THE CONTRACTOR PRIOR TO THE START OF CONSTRUCTION OPERATIONS AT THE PROJECT SITE. SEE PRECONSTRUCTION SURVEY AND MONITORING NOTES.

12. SMOOTH RIDING CONNECTIONS SHALL BE CONSTRUCTED AT ALL LIMITS OF PAVEMENT RECONSTRUCTION, INCLUDING THE BEGINNING AND END OF THE PROJECT AND CONNECTING APPROACHES, AS SHOWN ON THE PLANS AND/OR AS DIRECTED BY THE ENGINEER.

13. A MINIMUM OF 36 INCHES CLEAR WIDTH AND 80 INCHES HEADROOM CLEARANCE HEIGHT SHALL BE PROVIDED ALONG WALKWAYS.

14. THE SURFACE OF ANY ACCESSIBLE ROUTE SHALL COMPLY WITH THE LATEST "AMERICAN WITH DISABILITIES ACT ACCESSIBILITY GUIDELINES."

15. THE EXISTING DRAINAGE AND IRRIGATION SYSTEM SHALL BE FUNCTIONAL AT ALL TIMES DURING CONSTRUCTION. THE CONTRACTOR SHALL FURNISH MATERIALS, EQUIPMENT, LABOR, TOOLS, AND INCIDENTALS NECESSARY TO CONSTRUCT A TEMPORARY BYPASS TO DIVERT FLOW AWAY FROM THE PROJECT AREA. THIS WORK SHALL BE CONSIDERED INCIDENTAL TO VARIOUS CONTRACT ITEMS.

16. EARTH SWALE SHALL BE GRADED TO DRAIN. THIS WORK SHALL BE CONSIDERED INCIDENTAL TO THE VARIOUS CONTRACT ITEMS.

17. THE CONTRACTOR SHALL PROVIDE ACCESS TO AND FROM ALL EXISTING SIDE STREETS, DRIVEWAYS, WALKWAYS, ETC., AT ALL TIMES.

18. ALL SAW CUTTING WORK SHALL BE CONSIDERED INCIDENTAL TO VARIOUS CONTRACT ITEMS.

19. THE CONTRACTOR WILL BE REQUIRED TO LOCATE ALL EXISTING WATER LINES, VALVES, METERS AND BOXES, ETC., THAT MAY BE IMPACTED BY CONSTRUCTION ACTIVITIES BY SCHEDULING AN ON-SITE FIELD RECONNAISSANCE WITH THE DEPARTMENT OF WATER'S OPERATIONS DIVISION PRIOR TO START OF CONSTRUCTION OF ANY WORK. PHONE NO. 270-7633. THE CONTRACTOR WILL BE RESPONSIBLE FOR ALL FUTURE COSTS INVOLVED IN ANY REPAIR OF WATER SYSTEM IMPROVEMENTS DAMAGED BY HIS CONSTRUCTION WORK.

20. THE DRILLED, CAST-IN-PLACE REINFORCED CONCRETE SHAFTS SHALL BE EMBEDDED TO A MINIMUM TIP ELEVATION OF +420 FEET IN THE UNDERLYING SAPROLITE AND WEATHERED BASALT. THE EXACT DEPTHS WILL BE DETERMINED IN THE FIELD BY THE ENGINEER. SEE STRUCTURAL NOTES.

CONSTRUCTION NOTES WITHIN COUNTY RIGHT-OF-WAY AND EASEMENTS:

1. THE CONTRACTOR SHALL OBTAIN A PERMIT TO PERFORM WORK ON COUNTY HIGHWAYS AND EASEMENTS FROM THE COUNTY DIVISION OF LAND USE AND CODES ADMINISTRATION TWO WEEKS PRIOR TO THE COMMENCEMENT OF WORK. EROSION CONTROL PLAN AND CONSTRUCTION TRAFFIC CONTROL PLAN (TCP) PREPARED BY THE CONTRACTOR AND APPROVED BY THE DEPARTMENT OF PUBLIC WORKS SHALL BE PROVIDED WHEN APPLYING FOR THE PERMIT.

2. APPLICABLE CURRENT STANDARD DETAIL DRAWINGS AND STANDARD SPECIFICATIONS SECTIONS OF THE COUNTY OF MAUI DEPARTMENT OF PUBLIC WORKS SHALL BE INCLUDED AS PART OF THE CONSTRUCTION PLANS AS INDICATED.

3. ALL CONSTRUCTION AND RESTORATION WORK SHALL STRICTLY CONFORM TO THE APPLICABLE SECTIONS OF THE CURRENT "HAWAII STANDARD SPECIFICATIONS FOR ROAD AND BRIDGES CONSTRUCTION" (HAWAII STANDARD SPECIFICATIONS) AND THE "STANDARD PLANS," AS AMENDED OF THE STATE OF HAWAII, DEPARTMENT OF TRANSPORTATION, HIGHWAYS DIVISION.

4. IF EXISTING UTILITIES AND IMPROVEMENTS, WHETHER OR NOT SHOWN ON PLANS ARE DAMAGED DURING CONSTRUCTION, THE CONTRACTOR SHALL AT HIS OWN EXPENSE BE REQUIRED TO REPAIR SUCH UTILITIES AND IMPROVEMENTS.

5. THE CONTRACTOR SHALL PROVIDE, INSTALL, AND MAINTAIN ALL NECESSARY SIGNS, LIGHTS, FLARES, BARRICADES, AND OTHER PROTECTIVE DEVICES FOR THE PROTECTION, SAFETY, AND CONVENIENCE OF THE PUBLIC ACCORDING TO THE "MANUAL ON UNIFORM TRAFFIC CONTROL DEVICES FOR STREETS AND HIGHWAYS," 2005, AND TO THE RULES AND REGULATIONS GOVERNING THE USE OF TRAFFIC CONTROL DEVICES AT WORK SITES AND/OR ADJACENT PUBLIC STREETS AND HIGHWAYS ADOPTED BY THE HIGHWAY SAFETY COORDINATOR AND THE U.S. FEDERAL HIGHWAY ADMINISTRATION "MANUAL ON UNIFORM TRAFFIC CONTROL DEVICES FOR HIGHWAY CONSTRUCTION AND MAINTENANCE OPERATIONS" DATED 2005.

6. THE DIRECTOR OF PUBLIC WORKS AND/OR THE DEPARTMENT OF WATER SUPPLY HAS THE RIGHT TO STOP CONSTRUCTION SHOULD ANY WORK BE FOUND CONTRARY TO THE APPROVED CONSTRUCTION PLAN OR DETRIMENTAL TO THE PUBLIC'S INTEREST.

7. CONTRACTOR SHALL SCHEDULE A PRE-CONSTRUCTION MEETING WITH THE ENGINEERING DIVISION 5 DAYS PRIOR TO COMMENCEMENT OF CONSTRUCTION.

8. CONTRACTOR SHALL AT HIS OWN EXPENSE KEEP THE PROJECT AREA AND SURROUNDING AREA FREE FROM DUST NUISANCE AND WITHIN THE ALLOWABLE NOISE LEVELS. THE WORK SHALL BE IN CONFORMANCE WITH AIR POLLUTION AND NOISE CONTROL STANDARDS AND REGULATIONS OF THE STATE DEPARTMENT OF HEALTH AND COUNTY GRADING ORDINANCE.

9. THE CONTRACTOR SHALL BE RESPONSIBLE FOR CONFORMANCE WITH THE APPLICABLE PROVISIONS OF THE WATER QUALITY AND WATER POLLUTION CONTROL STANDARDS CONTAINED IN HAWAII ADMINISTRATIVE RULES, TITLE 11, CHAPTER 54, "WATER QUALITY STANDARDS" AND TITLE 11, CHAPTER 55, "WATER POLLUTION CONTROL," AND IF APPLICABLE, THE NPDES PERMIT FOR THE PROJECT. BEST MANAGEMENT PRACTICES SHALL BE EMPLOYED AT ALL TIMES DURING CONSTRUCTION.

10. CONTRACTOR SHALL REMOVE ALL ROCKS, SILT, AND DEBRIS RESULTING FROM HIS WORK AND DEPOSITED IN DRAINAGE FACILITIES, ROADWAY, STREAMS AND OTHER AREAS. THE COST INCURRED FOR ANY NECESSARY REMEDIAL ACTIONS ORDERED BY THE DIRECTOR OF PUBLIC WORKS SHALL BE PAID BY THE CONTRACTOR.

11. CONSTRUCTION DEBRIS AND WASTE SHALL BE HAULED TO AND DEPOSITED AT AN APPROPRIATE DISPOSAL SITE. THE CONTRACTOR SHALL INFORM THE DIRECTOR OF PUBLIC WORKS OF THE LOCATION OF THE DISPOSAL SITE. THE DISPOSAL SITE MUST FULFILL THE REQUIREMENTS OF THE GRADING ORDINANCE.

12. THE CONTRACTOR SHALL SUBMIT AN ELECTRONIC AUTOCAD (*.DWG), TAGGED IMAGE FILE FORMAT (*.TIFF), OR PORTABLE DOCUMENT FORMAT (*.PDF) AND 5 COPIES OF THE "AS-BUILT" DRAWINGS TO THE ENGINEERING DIVISION PRIOR TO THE FINAL APPROVAL OF THE PROJECT IMPROVEMENTS.

13. SHOULD HISTORIC SITES SUCH AS WALLS, PLATFORMS, PAVEMENTS OR MOUNDS, OR REMAINS SUCH AS ARTIFACTS, BURIALS, CONCENTRATION OF SHELL OR CHARCOAL BE ENCOUNTERED DURING CONSTRUCTION ACTIVITIES, WORK SHALL CEASE IMMEDIATELY IN THE IMMEDIATE VICINITY OF THE FIND; AND THE FIND SHALL BE PROTECTED FROM FURTHER DAMAGE. THE CONTRACTOR AND/OR LANDOWNER SHALL IMMEDIATELY CONTACT THE STATE HISTORIC PRESERVATION DIVISION (243-5169) WHICH WILL ASSESS THE SIGNIFICANCE OF THE FIND AND RECOMMEND APPROPRIATE MITIGATION MEASURES, IF NECESSARY. SEE ARCHAEOLOGICAL NOTE.

14. PURSUANT TO MAUI COUNTY CODE, SECTION 3.44.015C, THE COUNTY OF MAUI IS NOT RESPONSIBLE FOR ANY PARK, ROADWAY, EASEMENT (INCLUDING BUT NOT LIMITED TO DRAINAGE, SEWER, ACCESS, RECLAIMED WATER, OR AVIATION EASEMENT) OR ANY OTHER INTEREST IN REAL PROPERTY SHOWN ON THIS MAP OR SHOWN ON THESE PLANS, UNLESS THE MAUI COUNTY COUNCIL HAS ACCEPTED ITS DEDICATION BY A RESOLUTION APPROVED BY A MAJORITY OF COUNCIL'S MEMBERS AT A REGULAR OR SPECIAL MEETING OF THE MAUI COUNTY COUNCIL.

PRECONSTRUCTION SURVEY AND MONITORING NOTES:

1. PRIOR TO THE START OF CONSTRUCTION, A PHOTOGRAPHIC AND VIDEO SURVEY SHALL BE MADE OF EXISTING STRUCTURES TO REMAIN SUCH AS PAVEMENTS, ON-GRADE SLABS, A HOUSE A 900 HAIKU ROAD, AND OTHER STRUCTURES WITHIN ABOUT 150 FEET OF THE EXISTING BOX CULVERT AND PROPOSED ENERGY DISSIPATER BASIN AND GROUTED RIPRAP TRANSITION TO DOCUMENT THEIR EXISTING CONDITION. ANY EXISTING DISTRESS OR DETERIORATED CONDITIONS SHALL BE NOTED AND DOCUMENTED.

2. THE PHOTOGRAPHIC AND VIDEO SURVEY SHALL INCLUDE ESTABLISHING MONITORING POINTS ON EXISTING STRUCTURES TO REMAIN SUCH AS PAVEMENT, WATERLINE, ON-GRADE SLABS, HOUSES, AND OTHER STRUCTURES TO REMAIN WITHIN 150 FEET OF THE CULVERT REPLACEMENT TO MEASURE VERTICAL AND HORIZONTAL MOVEMENTS. ALL MONITORING POINTS SHALL BE REFERENCED TO THE BENCH MARK LOCATED AT STATION HR-3 MAG. NAIL ON HAIKU ROAD ABOUT 150 FEET WEST OF THE BOX CULVERT SO AS NOT TO BE AFFECTED BY THE CONSTRUCTION. FOR THE EXISTING HOUSE AT 900 HAIKU ROAD, THE POINTS ESTABLISHED SHALL BE ON AT LEAST EACH CORNER OF THE HOUSE.

3. THE MONITORING POINTS SHALL BE SURVEYED AT LEAST ONE MONTH PRIOR TO THE START OF ANY CONSTRUCTION OPERATIONS AT THE SITE TO ESTABLISH A BASELINE READING. THE READING SHALL INCLUDING BOTH ELEVATIONS AND POSITION. DURING CONSTRUCTION, THE MONITORING POINTS SHALL BE SURVEYED AT LEAST ONCE A WEEK DURING DRILLED SHAFT INSTALLATION, EXCAVATION AND DEWATERING OPERATIONS, AND EMBANKMENT RECONSTRUCTION. MORE FREQUENT SURVEYS SHALL BE PERFORMED IF MOVEMENTS ARE OBSERVED DURING CONSTRUCTION. THE SURVEY SHALL BE PERFORMED BY A SURVEYOR LICENSED IN HAWAII.

4. THE CONTRACTOR SHALL EVALUATE THE DATA AFTER IT IS OBTAINED. IF MORE THAN APPROXIMATELY 1/4-INCH OF VERTICAL OR HORIZONTAL MOVEMENT IS DETECTED OR IF DISTRESS IS OBSERVED IN THE EXISTING HOUSE, STRUCTURES, WALLS, PAVEMENTS, SLABS, UTILITIES, AND OTHER STRUCTURES TO REMAIN, THE CONTRACTOR SHALL IMMEDIATELY MODIFY HIS CONSTRUCTION MEANS AND METHODS TO REDUCE THE AMOUNT OF ADDITIONAL SETTLEMENT, MOVEMENT AND DISTRESS.

5. A FINAL SURVEY OF THE MONITORING POINTS SHALL BE PERFORMED NO SOONER THAN ONE MONTH AFTER THE COMPLETION OF CONSTRUCTION. IN ADDITON TO THE FINAL SURVEY, A POST-CONSTRUCTION PHOTOGRAPHIC AND VIDEO SURVEY SIMILAR TO THE PRE-CONSTRUCTION SURVEY SHALL BE CONDUCTED.

6. THE COUNTY SHALL BE PROVIDED WITH THREE (3) COPIES OF THE PHOTOGRAPHS, VIDEOS, SETTLEMENT DATA, AND A PLAN SHOWING THE LOCATIONS OF THE PHOTOGRAPHS, VIDEOS, AND SETTLEMENT POINTS. THE INFORMATION WILL PROVIDE RECORDS IN THE EVENT MOVEMENT AND CLAIMS FOR DAMAGES ARISE DURING THE CONSTRUCTION. IT WILL ALSO HELP TO ALERT THE CONTRACTOR OF A NEED TO MODIFY HIS CONSTRUCTION METHODS SHOULD SETTLEMENT, MOVEMENTS, AND DISTRESS BE DETECTED.

7. IN ADDITION TO THE SURVEY MONITORING POINTS, AT LEAST ONE SLOPE INCLINOMETER SHALL BE INSTALLED WITHIN THE EXISTING ROAD AT THE TOP OF THE EMBANKMENT SLOPE TO A DEPTH OF AT LEAST 60 FEET BELOW EXISTING GRADES. THE INCLINOMETER SHALL BE LOCATED AS SHOWN ON DRAWING C-2. THE TOP OF THE CASING SHALL BE SURVEYED TO OBTAIN BASELINE READINGS OF LOCATION AND ELEVATION. THE TOP OF THE CASING SHALL BE SURVEYED BEFORE THE START OF CONSTRUCTION AND WEEKLY DURING THE EMBANKMENT AND CHANNEL EXCAVATION AND BACKFILLING OPERATIONS, AND DURING BOX CULVERT RECONSTRUCTION AND ENERGY DISSIPATOR BASIN AND GROUTED RIPRAP TRANSITION CONSTRUCTION TO DETERMINE ITS ELEVATION AND COORDINATES. DURING CONSTRUCTION, THE INCLINOMETER SHALL BE MEASURED AT THE SAME TIME AS THE SURVEY MONITORING POINTS AND AS THE TOP OF THE CASING IS SURVEYED. RECORDS OF THE INCLINOMETER MEASUREMENTS SHALL BE SUBMITTED WITH THE READINGS OF THE SURVEY MONITORING POINTS.

8. THE INCLINOMETER SHOULD BE INSTALLED BY A SPECIALTY CONTRACTOR THAT HAS SUCCESSFULLY INSTALLED INCLINOMETERS FOR AT LEAST 3 YEARS IN SIMILAR DEPOSITS. THE INCLINOMETER PERSONAL SHOULD HAVE AT LEAST 3 YEARS EXPERIENCE IN INSTALLING CASING, PERFORMING THE TESTING, AND COLLECTING AND ANALYZING THE DATA.

PUBLIC HEALTH, SAFETY AND CONVENIENCE NOTES:

1. THE CONTRACTOR SHALL OBSERVE AND COMPLY WITH ALL FEDERAL, STATE AND COUNTY LAWS REQUIRED FOR THE PROTECTION OF PUBLIC HEALTH AND SAFETY AND ENVIRONMENTAL QUALITY.

2. THE CONTRACTOR AT HIS OWN EXPENSE SHALL KEEP THE PROJECT AND ITS SURROUNDING AREAS FREE FROM DUST NUISANCE. THE WORK SHALL BE IN CONFORMANCE WITH THE AIR POLLUTION CONTROL STANDARDS AND REGULATIONS OF THE STATE DEPARTMENT OF HEALTH AND THE COUNTY GRADING ORDINANCE

3. THE CONTRACTOR'S ATTENTION IS DIRECTED TO CHAPTER 46 PUBLIC HEALTH REGULATIONS, DEPARTMENT OF HEALTH, STATE OF HAWAII, "COMMUNITY NOISE CONTROL FOR OAHU" IN WHICH MAXIMUM ALLOWABLE NOISE LEVELS HAVE BEEN SET. IF THE CONSTRUCTION ACTIVITIES FOR THIS PROJECT WILL EXCEED THE ALLOWABLE NOISE LEVELS, THE CONTRACTOR IS REQUIRED TO OBTAIN A PERMIT FROM THE DIRECTOR OF THE DEPARTMENT OF HEALTH. THE CONTRACTOR SHALL OBTAIN A COPY OF CHAPTER 46 AND BECOME FAMILIAR WITH THE NOISE LEVEL RESTRICTIONS AND THE PROCEDURES FOR OBTAINING A PERMIT FOR CONSTRUCTION ACTIVITIES.

4. EXCEPT FOR PERMITTED CLOSURE OF HAIKU ROAD AS INDICATED ON DRAWING C-8, ALL LANES SHALL BE OPEN TO TRAFFIC DURING PEAK HOURS FROM 6:30 A.M. TO 8:30 A.M., DURING AFTERNOON PEAK HOURS FROM 3:30 P.M. TO 6:00 P.M., AND DURING OFF WORK HOURS. ONLY ONE LANE OF HIGHWAY SHALL BE CLOSED AT ANY OTHER TIME. FAILURE OF THE CONTRACTOR TO OPEN ALL LANES OF TRAFFIC DURING THE TIMES SPECIFIED ABOVE, SHALL RESULT IN ASSESSMENT OF LIQUIDATED DAMAGES AS SPECIFIED IN SUBSECTION 108.08 OF THE HAWAII STANDARD SPECIFICATIONS. EXCEPTIONS TO THE ABOVE PEAK HOURS SHALL BE WITH THE APPROVAL OF THE ENGINEER.

ARCHAEOLOGICAL NOTE:

PURSUANT TO CHAPTER 6E OF THE HAWAII REVISED STATUTES, THE CONTRACTOR SHALL ENSURE THAT IN THE EVENT THAT ANY HUMAN SKELETAL REMAINS ARE INADVERTENTLY DISCOVERED DURING CONSTRUCTION, THE REMAINS SHALL NOT BE MOVED AND ANY ACTIVITY IN THE IMMEDIATE AREA THAT COULD DAMAGE THE REMAINS OR THE POTENTIAL HISTORIC SITE SHALL CEASE AND THE DEPARTMENT OF LAND AND NATURAL RESOURCES HISTORIC PRESERVATION DIVISION (243-5169), THE APPROPRIATE MEDICAL EXAMINER OR CORONER, AND THE POLICE DEPARTMENT (244-6400) SHALL BE CONTACTED.

CONTRACTOR'S TEMPORARY CONSTRUCTION SITE ACCESS NOTES:

1. CONTRACTOR SHALL UTILIZE THE EXISTING MAINTENANCE TRAIL SHOWN ON THE SITE WORK PLAN FOR TEMPORARY CONSTRUCTION SITE INGRESS AND EGRESS.

2. THE EXISTING MAINTENANCE TRAIL SHALL BE IMPROVED TO A TEMPORARY ROAD PRIOR TO USE BY THE CONTRACTOR WITH A 12-FEET WIDE BY 8-INCH THICK 1-INCH TO 3-INCH COARSE CRUSHED ROCK SURFACE OVER GEOTEXTILE FILTER FABRIC.

3. ALL WORK SHALL BE PERFORMED AT LEAST 5' AWAY FROM THE PROPOSED NEW EASEMENT LINE. CUT AND FILL SLOPES SHALL NOT BE STEEPER THAN 1-1/2 HORIZONTAL TO 1 VERTICAL AND SHALL BE GRASSED IMMEDIATELY AFTER COMPLETION AND PRIOR TO USE OF THE TEMPORARY ACCESS ROAD.

4. AFTER COMPLETION OF THE PROJECT CONSTRUCTION, THE TEMPORARY CONSTRUCTION SITE ACCESS ROAD WILL BE USED BY THE COUNTY FOR MAINTENANCE ACCESS TO THE SITE. CONTRACTOR SHALL REPAIR THE TEMPORARY ACCESS ROAD TO THE CONDITIONS NOTED ABOVE TO PROVIDE A FIRST CLASS MAINTENANCE ACCESS ROAD ACCEPTABLE TO THE ENGINEER FOR THE COUNTY'S USE.

5. PROVIDE WATER POLLUTION CONTROL, EROSION CONTROL, & BEST MANAGEMENT PRACTICES PER NOTES ON DWG. G-3.

CIVIL NOTES:

1. THE EXISTING HAIKU ROAD CULVERT REPLACEMENT CONSTRUCTION WORK SHOWN ON THE CIVIL PLANS ARE BASED ON THE CONDITION OF THE EXISTING CULVERT AND SITE SHOWN ON TOPOGRAPHIC SURVEY MAP FOR THE PROJECT BY CONTROLPOINT SURVEYING, INC. DATED MAY 11, 2011.

2. 6-FOOT HIGH CHAIN LINK FENCE SHALL BE PROVIDED AS INDICATED ON STATE STANDARD PLAN D-02, AS SPECIFIED IN STATE STANDARD SPECIFICATIONS SECTION 607, AND AS MODIFIED BY THESE PLANS.

3. METAL GUARDRAILS SHALL BE PROVIDED AS INDICATED ON STATE STANDARD DRAWINGS B-1 FOR GUARDRAIL DETAILS AND NOTES, B-2 FOR STRONG POST W-BEAM GUARDRAIL, AND B-3 FOR FLARED RWEOIa END SECTION SHOWN ON THESE PLANS AS SHEETS C-11 AND C-12.

4. CONCRETE SHALL BE CAST-IN-PLACE CLASS 'A' WITH A 28-DAY COMPRESSIVE STRENGTH OF f'c = 3000 PSI, EXCEPT AS NOTED.

5. REINFORCING STEEL SHALL BE DEFORMED BARS CONFORMING TO ASTM A615, GRADE 60 AND SHALL HAVE MINIMUM CONCRETE COVER AS INDICATED ON THE PLANS.

6. STONES FOR GROUTED RIPRAP TRANSITION SHALL BE CLEAN, SOUND, DURABLE, LAVA ROCK OF VARIABLE SIZES, 9 INCHES MINIMUM, AND NOT THICKER THAT THE DEPTH OF THE COURSE INDICATED ON THE PLANS. NEITHER BREADTH NOR THICKNESS OF A SINGLE STONE SHALL BE LESS THAN ONE-THIRD ITS LENGTH. THE MINIMUM WEIGHT OF THE STONE SHALL BE 150 POUNDS PER CUBIC FOOT AS COMPUTED BY MULTIPLYING THE SPECIFIC GRAVITY (AASHTO T 85) TIMES 62.4 POUNDS PER CUBIC FOOT. CONSTRUCTION SHALL CONFORM TO HAWAII STANDARD SPECIFICATIONS SECTION 508 – CEMENT RUBBLE MASONRY.

7. MORTAR SHALL BE COMPOSED OF ONE PART PORTLAND CEMENT AND THREE PARTS OF FINE AGGREGATE BY VOLUME.

PREFINAL

SCOTT A. KUNIOKA
LICENSED PROFESSIONAL ENGINEER
No. 7257-C
HAWAII U.S.A.

LICENSE EXPIRATION DATE: 4/30/12

THIS WORK WAS PREPARED BY ME OR UNDER MY SUPERVISION AND CONSTRUCTION OF THIS PROJECT WILL BE UNDER MY OBSERVATION.

SHIMABUKURO, ENDO & YOSHIZAKI, INC.
1125 12th Avenue
Honolulu, Hawaii 96816

COUNTY OF MAUI
DEPARTMENT OF PUBLIC WORKS
HAIKU, MAKAWAO, MAUI, HAWAII

HAIKU ROAD CULVERT REPLACEMENT
JOB NO. 08-11

GENERAL NOTES

Date: MARCH 2012
Design By: SAK
Drawn By: GAE

G-1

SHEET 2 OF 36 SHEETS

04/04/12 1:53:29 PM S:\SAK\HAIKU CULVERT\DRAW\02 - NOTES.DWG

EARTHWORK NOTES

A. GENERAL

1. GEOTECHNICAL INVESTIGATIONS WERE CONDUCTED FOR THE PROJECT AND "PRE-FINAL REPORT GEOTECHNICAL CONSULTATION HAIKU ROAD AND DRAINAGE IMPROVEMENTS" DATED FEBRUARY 24, 2012 WAS PREPARED BY PACIFIC GEOTECHNICAL ENGINEERS, INC. (PGE).

2. THE CONTRACTOR SHALL REVIEW THE REPORT AND COMPLY WITH THE RECOMMENDATIONS IN THE REPORT, EXCEPT AS MODIFIED BELOW.

3. THREE BORINGS WERE DRILLED FOR THE PROJECT. LOCATIONS OF THE BORINGS ARE SHOWN ON DRAWING C-2 AND LOGS OF THE BORINGS ARE SHOWN ON DRAWING G-4.

4. GROUND WATER WAS ENCOUNTERED IN THE BORINGS AT THE TIME OF THE EXPLORATIONS AS INDICATED ON THE LOGS. THE CONTRACTOR HAVE SUMP PUMPS OR OTHER SUITABLE DEWATERING EQUIPMENT READILY AVAILABLE AT THE SITE TO REMOVE ANY SURFACE AND/OR GROUNDWATER THAT MAY ENTER THE EXCAVATION. ALL PUMPED WATER FROM ANY CONSTRUCTION DEWATERING OPERATIONS THAT ARE PERFORMED SHALL BE FILTERED AND TREATED TO CONFORM TO APPLICABLE CITY, STATE, AND FEDERAL REGULATIONS BEFORE BEING DISCHARGED.

5. ALL EXCAVATIONS, SHEETING, SHORING, BYPASSING AND DEWATERING THAT MAY BE REQUIRED FOR THE PROJECT INCLUDING TEMPORARY EXCAVATION SLOPES, TRENCHES AND PITS, SHALL BE THE CONTRACTOR'S RESPONSIBILITY. ALL CONSTRUCTION EXCAVATIONS, BYPASSING AND DEWATERING SHALL BE PERFORMED AND SUPPORTED IN ACCORDANCE WITH APPLICABLE COUNTY, STATE AND FEDERAL SAFETY REGULATIONS, INCLUDING CURRENT OSHA EXCAVATION AND TRENCH SAFETY STANDARDS. THE CONTRACTOR SHALL RETAIN QUALIFIED AND EXPERIENCED REGISTERED CIVIL, STRUCTURAL AND GEOTECHNICAL ENGINEERS TO DESIGN THE EXCAVATION SUPPORT, BYPASSING AND DEWATERING SYSTEMS.

6. EXCAVATION TO THE DEPTHS REQUIRED TO PREPARE THE BOX CULVERT, ENERGY DISSIPATOR BASIN, GRATED RIPRAP TRANSITION, AND EMBANKMENT AREAS AND FOR NEW IMPROVEMENTS ARE ANTICIPATED TO ENCOUNTER SANDY SILT, SAPROLITE, COMPLETELY WEATHERED CLINKER, ALLUVIUM, HARD BASALTIC COBBLES, POSSIBLE HARD BASALTIC BOULDERS, TRASH, CONCRETE, AND MISCELLANEOUS DEBRIS. THESE MATERIALS CAN GENERALLY BE EXCAVATED WITH CONVENTIONAL EARTHWORK EQUIPMENT WITH THE EXCEPTION OF CONCRETE DEBRIS AND HARD BASALTIC BOULDERS. EXCAVATIONS THAT EXTEND INTO SLIGHTLY JOINTED, HARD, AND RELATIVELY INTACT ROCK, HIGHLY WELDED CLINKER, AND HARD BASALTIC BOULDERS WILL BE DIFFICULT AND WILL LIKELY REQUIRE A LARGE BACKHOE EQUIPPED WITH A HYDRAULIC HOE RAM ATTACHMENT OR OTHER SUITABLE EXCAVATION EQUIPMENT. THE EXCAVATION WORK SHALL BE DONE CAREFULLY TO REDUCE THE POTENTIAL FOR UNDERMINING THE EXISTING CULVERT AND CAUSING POTENTIAL INSTABILITY IN THE EXISTING ROADWAY EMBANKMENT AND IMPROVEMENTS, INCLUDING EXISTING 6-INCH WATER LINE, PAVEMENT, AND GUARDRAIL.

7. DEWATERING WILL BE REQUIRED FOR THE PROJECT AND SHALL BE THE CONTRACTOR'S RESPONSIBILITY. THE CONTRACTOR SHALL HAVE SUMP PUMPS OR OTHER SUITABLE DEWATERING EQUIPMENT READILY AVAILABLE AT THE PROJECT SITE TO REMOVE ANY SURFACE AND/OR GROUND WATER THAT MAY ENTER THE EXCAVATION. ALL PUMPED WATER FROM ANY CONSTRUCTION DEWATERING OPERATION THAT ARE PERFORMED SHALL BE FILTERED AND TREATED TO CONFORM TO APPLICABLE COUNTY, STATE, AND FEDERAL REGULATIONS BEFORE BEING DISCHARGED.

8. A TEMPORARY BYPASS SHALL BE PROVIDED BY THE CONTRACTOR, AS REQUIRED, TO DIVERT STORM AND IRRIGATION WATER IN THE EXISTING BOX CULVERT AND HAIKU STREAM CHANNEL AND UPSTREAM IRRIGATION DITCH AWAY FROM THE WORK AREA DURING THE PROJECT CONSTRUCTION PERIOD. THE TEMPORARY BYPASS PLAN SHALL BE SUBMITTED TO THE COUNTY'S ENGINEERING DIVISION AND THE EAST MAUI IRRIGATION COMPANY, LTD. FOR REVIEW AND APPROVAL AT LEAST TWO (2) WEEKS PRIOR TO THE START OF CONSTRUCTION AT THE PROJECT AREA.

9. THE CONTRACTOR SHALL DETERMINE THE METHOD AND EQUIPMENT TO BE USED FOR EARTHWORK OPERATIONS, SUBJECT TO PRACTICAL LIMITS AND SAFETY CONSIDERATIONS. CONTRACTOR SHALL EXAMINE THE EXISTING PROJECT SITE CONDITIONS AND MAKE HIS OWN INTERPRETATION OF THE MATERIALS TO BE ENCOUNTERED.

10. QUALIFIED COUNTY AND CONTRACTOR TECHNICAL PERSONNEL SHALL MONITOR SITE EARTHWORK AND PREPARATION OPERATIONS TO OBSERVE WHETHER UNDESIRABLE MATERIALS ARE ENCOUNTERED DURING THE EXCAVATION AND SCARIFICATION PROCESS AND TO CONFIRM WHETHER THE EXPOSED SOIL/ROCK CONDITIONS ARE SIMILAR TO THOSE ENCOUNTERED IN THE BORINGS.

B. SITE PREPARATION

1. PRIOR TO PERFORMING SITEWORK OPERATIONS, THE AREAS OF THE PROPOSED GRADING AND CONSTRUCTION SHALL BE PREPARED BY CLEARING, STRIPPING AND GRUBBING THE TOP 6 INCHES OF SOIL CONTAINING VEGETATION, ROOTS, ORGANIC MATTER, AND DEBRIS. ANY EXISTING TREES AND STUMPS IN THE PROJECT AREA SHALL BE REMOVED. CARE SHALL BE TAKEN ALONG THE EXISTING SLOPE TO PREVENT UNDERMINING OF THE EXISTING ROAD, BOX CULVERT, AND 6-INCH WATER LINE. DEMOLISH AND REMOVE PORTIONS OF THE EXISTING BOX CULVERT AND OTHER IMPROVEMENTS AS INDICATED ON THE PLANS. THE CLEARED, STRIPPED, GRUBBED, AND DEMOLISHED MATERIALS SHALL BE HAULED TO AND DISPOSED AT A SUITABLE OFF-SITE DISPOSAL SITE.

2. EXISTING TREES WITHIN THE GRADING LIMITS SHALL BE COMPLETELY REMOVED AS INDICATED. THE ROOTS AND STUMPS OF REMOVED TREES SHALL BE COMPLETELY GRUBBED AND REMOVED AND THE RESULTING EXCAVATIONS BACKFILLED WITH PROPERLY COMPACTED FILL MATERIAL CONFORMING TO THE REQUIREMENTS OUTLINED BELOW.

3. EXISTING UNDERGROUND UTILITY LINES WITHIN THE GRADING LIMITS SUCH AS WATER LINE THAT MAY INTERFERE WITH THE PROPOSED CONSTRUCTION SHALL BE REMOVED AND RELOCATED IF STILL IN USE. THE REMAINING PORTIONS OF ANY UNDERGROUND LINES THAT ARE LEFT IN-PLACE SHALL BE PROPERLY CUT AND FILLED WITH GROUT OR REMOVED TO REDUCE THE POTENTIAL FOR SEEPAGE PATHS IN THE EMBANKMENT.

4. THE CONTRACTOR SHALL BE SOLELY RESPONSIBLE FOR THE ADEQUACY AND SAFETY OF THE SHORING INSTALLATION. HIS/HER REPRESENTATIVE SHALL BE CONTINUOUSLY PRESENT ON-SITE DURING EXCAVATION AND CONSTRUCTION WORK AND SHALL PROMPTLY OBSERVE AND REACT TO CHANGING CONDITIONS DURING CONSTRUCTION, SUCH AS UNFORESEEN SUBSURFACE CONDITIONS, UNEXPECTED HIGH GROUND WATER TABLE, INAPPROPRIATE CONSTRUCTION SEQUENCE OR TECHNIQUES, ETC. WHICH MAY ADVERSELY AFFECT SHORING STABILITY.

5. SOME MINOR MOVEMENT OF SHORING SYSTEM AND THE ADJACENT GROUND MAY OCCUR DUE TO CHANGES IN EARTH STRESSES DURING EXCAVATION. DUE TO THE COMPLEXITY OF THE STRESS CHANGES, IT IS DIFFICULT TO ACCURATELY ESTIMATE THE MAGNITUDE OF MOVEMENT. THE MAGNITUDE WILL ALSO DEPEND GREATLY UPON WORKMANSHIP, SUCH AS HOW QUICKLY AND TIGHTLY THE SHORING AND BRACING SUPPORTS ARE INSTALLED, THE SUBSURFACE CONDITIONS, THE SIZE OF THE EXCAVATION, AND THE RATE OF EXCAVATION. THUS, THE EXCAVATION SHORING SHALL BE INSTALLED PROPERLY AND AS EARLY AS PRACTICAL. THE ADJACENT GROUND SHALL BE CONTINUOUSLY MONITORED FOR CRACKS, DIPS, AND/OR OTHER INDICATIONS OF MOVEMENT WITH INSTRUMENTS.

C. EMBANKMENT REPAIRS AND GRADING

1. EMBANKMENT REPAIRS AND GRADING SHALL BE PERFORMED AS INDICATED ON DRAWING C-2 AND SPECIFIED UNDER GRADING NOTES ON DRAWING G-3, EXCEPT AS MODIFIED BELOW.

2. AFTER STRIPPING AND GRUBBING OF THE EXISTING EMBANKMENT SLOPE, THE SUBGRADE MOISTURE CONTENT BENEATH AREAS TO RECEIVE FILL SHALL BE CHECKED BEFORE COMPACTING. IF THE MOISTURE CONTENT IS HIGHER THAN THE OPTIMUM MOISTURE CONTENT FOR THIS MATERIAL, THE SUBGRADE SHALL BE COMPACTED TO A RELATIVE COMPACTION OF AT LEAST 90 PERCENT. IF THE MOISTURE CONTENT IS ON THE DRY SIDE OF THE OPTIMUM MOISTURE CONTENT, THEN THE SUBGRADE SHALL BE SCARIFIED TO A DEPTH OF AT LEAST 6 INCHES, THOROUGHLY MOISTURE CONDITIONED WET OF THE OPTIMUM MOISTURE CONTENT FOR THIS MATERIAL, AND COMPACTED TO A RELATIVE COMPACTION OF AT LEAST 90 PERCENT BUT NOT MORE THAN 95 PERCENT.

3. RELATIVE COMPACTION IS DEFINED AS THE DRY DENSITY OF THE COMPACTED MATERIAL EXPRESSED AS A PERCENTAGE OF THE MAXIMUM DRY DENSITY OF THE SAME MATERIAL BASED ON ASTM D 1557 TEST METHOD.

4. ANY SOFT OR YIELDING ZONES DETECTED DURING THE SUBGRADE COMPACTION SHALL BE TREATED BY REMOVING THE SOFT AND LOOSE MATERIALS TO FIRM SOILS AND REPLACING THEM WITH PROPERLY COMPACTED STRUCTURAL FILL AS SPECIFIED IN ITEMS F2 AND F3 BELOW.

5. PERMANENT CUT AND FILL SLOPES SHALL NOT BE STEEPER THAN 1.5H:1V.

6. GENERAL FILL MATERIAL CONFORMING TO THE REQUIREMENTS SPECIFIED IN ITEMS F4 AND F5 BELOW SHALL BE USED FOR EMBANKMENT REPAIRS AND GRADING.

7. ALL FILLS PLACED ON SLOPES STEEPER THAN 5H:1V SHALL BE CONTINUOUSLY KEYED AND BENCHED INTO THE HILLSIDE. A BENCH HEIGHT SHALL NOT BE MORE THAN 4 FEET AND BENCH WIDTH SHALL NOT BE MORE THAN 2 FEET. BENCHING OF THE HILLSIDE BELOW THE EXISTING BOX CULVERT IS NOT NEEDED.

8. ALL FILL SLOPES SHALL BE OVERBUILT AND TRIMMED BACK TO EXPOSE FIRM, COMPACTED MATERIAL AT THE FINISH GRADE OR THE SLOPE FACE SHALL BE COMPACTED TO A FIRM CONSISTENCY.

9. ALL PERMANENT CUT AND FILL SLOPES IN SOIL MATERIALS SHALL BE GRASSED AS SOON AS PRACTICAL TO REDUCE OVERALL EROSION RATES.

10. THE CONTRACTOR SHALL RETAIN QUALIFIED AND EXPERIENCED REGISTERED GEOTECHNICAL AND STRUCTURAL ENGINEERS WITH AT LEAST 10 YEARS OF REGISTERED EXPERIENCE AND AT LEAST 8 YEARS OF REGISTERED EXPERIENCE IN RESPONSIBLE CHARGE TO DESIGN ALL TEMPORARY CUT SLOPES INCLUDING ANY ASSOCIATED TEMPORARY SUPPORT SYSTEMS. RESPONSIBLE CHARGE IS DEFINED AS BEING IN DIRECT CONTROL OR HAS PERSONAL SUPERVISION OF GEOTECHNICAL OR STRUCTURAL ENGINEERING WORK.

D. FOUNDATION PREPARATION

1. AFTER STRIPPING AND GRUBBING THE SURFACE VEGETATION AND PRIOR TO FILLING, THE SUBGRADE FOR THE NEW BOX CULVERT, ENERGY DISSIPATOR BASIN AND GROUTED RIPRAP TRANSITION FOUNDATION SHALL BE PREPARED BY UNIFORMLY OVER-EXCAVATING TO AT LEAST AN ELEVATION OF +450 FEET TO REMOVE THE SOFT YOUNGER ALLUVIAL SANDY SILT DOWN TO DENSE SILTY ALLUVIAL GRAVEL AND/OR FIRM SAPROLITE MATERIAL. THE OVER-EXCAVATION SHALL ENCOMPASS THE AREA TO BE FILLED AND EXTEND AT LEAST 5 FEET BEYOND THE FOUNDATION OF THE BOX CULVERT AND ENERGY DISSIPATOR BASIN AND 2 FEET BEYOND THE FOUNDATION OF THE GROUTED RIPRAP TRANSITION BUT NOT LESS THAN THE LIMITS OF THE EXISTING CHANNEL. THE OVER-EXCAVATION SHALL NOT REMAIN OPEN FOR AN EXTENDED PERIOD OF TIME AS ASSESSED BY THE CONTRACTOR'S OSHA COMPETENT PERSON.

2. THE BOTTOM OF THE OVER-EXCAVATION TO ELEVATION +450 FEET MAY BE AT OR BELOW THE GROUND WATER TABLE. GROUND WATER WAS ENCOUNTERED IN BORINGS 1, 2, & 3 AT APPROXIMATE ELEVATIONS +456.5 FEET, +451.5 FEET, AND +452.6 FEET RESPECTIVELY. DEWATERING OF THE EXCAVATION WILL BE REQUIRED TO PROPERLY CLEAN THE BOTTOM OF THE EXCAVATION.

3. EXCAVATED SOILS SHALL NOT BE STOCKPILED CLOSER THAN A HORIZONTAL DISTANCE EQUAL TO THE DEPTH OF THE EXCAVATION FROM THE EDGED OF THE EXCAVATION TO REDUCE THE POTENTIAL FOR EXCESSIVE GROUND MOVEMENT.

4. LOCALIZED SOFT AND/OR LOOSE MATERIALS THAT ARE EXCAVATED AT THE LOCATION OF FOUNDATION EXCAVATIONS, INCLUDING THE SCOUR POND, SHALL BE OVER-EXCAVATED DOWN TO THE FIRM MATERIAL, AND BACKFILLED WITH STRUCTURAL FILL PLACED IN NOT MORE THAN 6-INCH THICK HORIZONTAL LOOSE LIFTS, MOISTURE CONDITIONED TO WITHIN 2 PERCENT OF THE OPTIMUM MOISTURE CONTENT FOR THESE MATERIALS, AND COMPACTED TO A RELATIVE COMPACTION OF AT LEAST 95 PERCENT.

5. AFTER DEWATERING AND PROPER CLEANING, THE BOTTOM OF THE OVER-EXCAVATION BELOW GROUND WATER TABLE SHALL BE LINED WITH WOVEN GEOTEXTILE SUCH AS MIRAFI HP370 OR APPROVED EQUAL. THE OVER-EXCAVATION SHALL BE BACKFILLED WITH CLEAN, GRANULAR BASALTIC GRAVEL CONFORMING TO THE GRADATION REQUIREMENTS OF ASTM D 448, NO 5 SIZE TO AT LEAST 1-FOOT ABOVE THE GROUND WATER TABLE. THE BASALTIC GRAVEL SHALL BE COMPLETELY WRAPPED IN THE GEOTEXTILE FABRIC BY PLACING A SECOND LAYER OF FABRIC OVER THE GRAVEL. THE FABRIC SHALL OVERLAP AT LEAST 24 INCHES ALONG ALL JOINTS.

6. THE GRANULAR BASALTIC GRAVEL SHALL BE PLACED IN HORIZONTAL LIFTS NOT EXCEEDING 12 INCHES IN LOOSE THICKNESS AND COMPACTED WITH SUITABLE COMPACTION EQUIPMENT TO A DENSE CONSISTENCY AS INDICATED BY LITTLE TO NO SETTLEMENT OF THE GRAVEL UNDER REPEATED PASSES BUT NOT LESS THAN 6 PASSES PER LIFT.

7. THE REMAINDER OF THE OVER-EXCAVATION FROM 1-FOOT ABOVE THE GROUND WATER TABLE SHALL BE BACKFILLED WITH PROPERLY COMPACTED STRUCTURAL FILL PLACED AND COMPACTED AS SPECIFIED IN ITEMS F2 AND F3 BELOW.

8. THE OVER-EXCAVATION AND BACKFILLING SHALL BE CHECKED FOR SUITABLE BEARING MATERIALS AND PROPER COMPACTION UNDER THE OBSERVATION OF A QUALIFIED AND EXPERIENCED GEOTECHNICAL ENGINEER APPROVED BY PGE.

9. THE RECONSTRUCTED BOX CULVERT AND PORTION OF THE NEW ENERGY DISSIPATOR BASIN WILL BE SUPPORTED ON DEEP FOUNDATIONS CONSISTING OF 24-INCH DIAMETER DRILLED, CAST-IN-PLACE REINFORCED CONCRETE SHAFTS EMBEDDED TO A MINIMUM TIP ELEVATION OF +420 FEET IN THE UNDERLYING SAPROLITE AND WEATHERED BASALT. SEE STRUCTURAL NOTES.

E. WALL DRAINAGE AND BACK FILL

1. THE WALLS OF THE ENERGY DISSIPATOR BASIN AND GROUTED RIPRAP TRANSITION SHALL BE PROVIDED WITH A POSITIVE SYSTEM OF DRAINAGE USING 3-INCH PVC PIPE WEEPHOLES TO REDUCE THE POTENTIAL FOR HYDROSTATIC PRESSURE BUILDUP. THE WEEPHOLES SHALL BE SET WITH INVERTS AT ELEVATION 460 FEET. THEY SHALL ALSO BE PROVIDED AT A CENTER TO CENTER SPACING OF NOT MORE THAN 6 FEET. 1 CUBIC FOOT OF DRAINAGE GRAVEL CONSISTING OF ASTM D448 NO. 67 SIZE BASALTIC GRAVEL LOCALLY REFERRED TO AS NO. 3B FINE WRAPPED IN NON-WOVEN GEOTEXTILE FILTER FABRIC SHALL BE PROVIDED AT AND ABOVE THE INTAKE END OF EACH WEEPHOLE.

2. LOW PERMEABILITY FILL AS SPECIFIED UNDER F6 THROUGH F8 BELOW SHALL BE PLACED DIRECTLY BELOW THE WEEPHOLE LEVEL TO REDUCE THE POTENTIAL FOR PONDING AND WATER ACCUMULATING BEHIND THE WALL.

3. THE NEW BOX CULVERT WALL BACKFILL TO THE TOP OF THE BOX CULVERT, THE GRATED DROP INLET WALL BACKFILL AND THE REMAINING WALL BACKFILL ABOVE THE LOW PERMEABILITY FILL AND DRAINAGE GRAVEL TO WITHIN 12 INCHES OF THE TOP OF ENERGY DISSIPATOR BASIN AND GROUTED RIPRAP TRANSITION WALLS AS INDICATED ON THE PLANS SHALL CONSIST OF GRANULAR, NON-EXPANSIVE AND FREE DRAINING FILL CONFORMING TO THE STRUCTURAL BACKFILL MATERIAL SPECIFIED UNDER ITEM F2 BELOW. THE STRUCTURAL BACKFILL SHALL BE PLACED IN NOT MORE THAN 6-INCH LOOSE LIFTS, MOISTURE CONDITIONED TO WITHIN 2 PERCENT OF OPTIMUM MOISTURE CONTENT FOR THIS MATERIAL AND COMPACTED TO A RELATIVE COMPACTION OF AT LEAST 90 PERCENT.

4. THE WALL BACKFILL SHALL BE CAPPED WITH AT LEAST 12 INCHES OF ON-SITE SOIL SUITABLE FOR GENERAL FILL AS SPECIFIED UNDER F5 AND F6 BELOW AND COMPACTED TO A RELATIVE COMPACTION OF AT LEAST 90 PERCENT AND GRASSED.

F. FILL MATERIALS, PLACEMENT, AND COMPACTION

1. ON-SITE MATERIAL ENCOUNTERED IN THE BORINGS CLASSIFIED AS MH & ML ACCORDING TO THE UNIFIED SOIL CLASSIFICATION SYSTEM (USCS) AND ASTM D 2487 ARE NOT SUITABLE FOR USE AS STRUCTURAL FILL. THIS MATERIAL MAY BE STOCKPILED FOR POSSIBLE RE-USE AS GENERAL FILL FOR THE EMBANKMENT REPAIRS AND CONSTRUCTION, NON-STRUCTURAL OR LANDSCAPE AREAS, OR CAPPING FILL IN NON-PAVED AREAS PROVIDED IT MEETS THE PROPERTY REQUIREMENTS SPECIFIED UNDER F4 BELOW. OTHERWISE, IT SHALL BE DISPOSED OF AT A SUITABLE OFF-SITE DISPOSAL AREA. OTHER UNSUITABLE SOILS ARE MATERIALS CLASSIFIED AS CH, CL, GC, PT, OL, OH, OR SC ACCORDING TO THE USCS AND ASTM D 2487.

2. STRUCTURAL FILL AND STRUCTURAL BACKFILL SHALL CONSIST OF GRANULAR, GENERALLY WELL-GRADED MATERIAL WITH PARTICLES RANGING FROM COARSE TO FINE AND CLASSIFIED AS GW, GW-GM, GP-GM, SW, SW-SM, OR SP-SM ACCORDING TO THE USCS. MATERIALS CLASSIFIED AS GM OR SM MAY BE USED AS STRUCTURAL FILL IF IT HAS A PLASTICITY INDEX OF ZERO. STRUCTURAL FILL AND STRUCTURAL BACKFILL SHALL CONSIST OF A GRANULAR SOIL/ROCK MIXTURE FREE OF ORGANIC MATTER, VEGETATION, TRASH, CONCRETE, OLD PAVEMENTS, CLAYEY SOILS, DEBRIS, AND PARTICLES LARGER THAN 3 INCHES IN MAXIMUM DIMENSION. IT SHALL CONTAIN LESS THAN 15 PERCENT FINES PASSING THE U.S. NO. 200 STANDARD SIEVE. IT SHALL ALSO HAVE A CBR VALUE OF AT LEAST 30, A CBR SWELL OF LESS THAN 1 PERCENT WHEN COMPACTED AT OPTIMUM MOISTURE CONTENT AND AFTER 4 DAYS OF SOAKING, A LIQUID LIMIT OF 25 PERCENT OR LESS, AND A PLASTICITY INDEX OF 10 OR LESS.

3. STRUCTURAL FILL BELOW STRUCTURE FOUNDATIONS SHALL BE PLACED IN NOT MORE THAN 8-INCH THICK HORIZONTAL, LOOSE LIFTS, MOISTURE CONDITIONED TO WITHIN 2 PERCENT OF THE OPTIMUM MOISTURE CONTENT FOR THIS MATERIAL, AND COMPACTED TO A RELATIVE COMPACTION OF AT LEAST 95 PERCENT.

4. STRUCTURAL BACKFILL FOR THE NEW BOX CULVERT SHALL BE PLACED TO THE TOP OF THE BOX CULVERT IN NOT MORE THAN 6-INCH THICK LOOSE LIFTS, MOISTURE CONDITIONED TO WITHIN 2 PERCENT OF OPTIMUM MOISTURE CONTENT FOR THIS MATERIAL, AND COMPACTED TO A RELATIVE COMPACTION OF AT LEAST 90 PERCENT.

5. GENERAL FILL MATERIALS FOR NON-STRUCTURAL, EMBANKMENT REPAIRS AND CONSTRUCTION, AND LANDSCAPE AREAS SHALL BE FREE OF ORGANIC MATTER, DEBRIS, TRASH, CONCRETE, OLD PAVEMENTS, AND PARTICLES LARGER THAN 3 INCHES IN MAXIMUM DIMENSION. IT SHALL HAVE A CBR SWELL OF LESS THAN 2 PERCENT WHEN COMPACTED AT OPTIMUM MOISTURE CONTENT AND AFTER 4 DAYS OF SOAKING, AND A CBR VALUE OF AT LEAST 10.

6. GENERAL FILL SHALL BE PLACED IN NOT MORE THAN 10-INCH THICK LOOSE LIFTS, THOROUGHLY MOISTURE CONDITIONED TO BETWEEN OPTIMUM AND 3 PERCENT WET OF OPTIMUM MOISTURE CONTENT, AND COMPACTED TO A RELATIVE COMPACTION OF AT LEAST 90 PERCENT. A NON-WOVEN GEOTEXTILE FILTER FABRIC SUCH AS MIRAFI 140N OR APPROVED EQUAL SHALL BE PROVIDED BETWEEN THIS MATERIAL AND THE STRUCTURAL FILL TO REDUCE THE POTENTIAL FOR INFILTRATIONS OF FINES INTO THE STRUCTURAL FILL. THE FABRIC SHALL OVERLAP AT LEAST 24 INCHES ALONG ALL JOINTS.

7. LOW PERMEABILITY FILL FOR BACKFILL SHALL CONSIST OF FINE GRAIN SOIL, SUCH AS ML, FREE OF ORGANIC MATTER, DEBRIS, AND PARTICLES GREATER THAN 2 INCHES IN MAXIMUM DIMENSION. IT SHALL HAVE A COEFFICIENT OF PERMEABILITY OF 10^{-6} CM/SEC OR LESS, A CBR VALUE OF LEAST 10, AND A CBR SWELL OF LESS THAN 1 PERCENT WHEN COMPACTED AT OPTIMUM MOISTURE CONTENT AND AFTER 4 DAYS OF SOAKING.

8. LOW PERMEABILITY SOIL FILL SHALL BE PLACED IN NOT MORE THAN 6-INCH THICK LOOSE LIFTS, MOISTURE CONDITIONED TO BETWEEN OPTIMUM MOISTURE CONTENT AND 3 PERCENT WET OF ITS OPTIMUM MOISTURE CONTENT, AND COMPACTED TO A RELATIVE COMPACTION OF AT LEAST 90 PERCENT.

9. LOCALLY AVAILABLE CONTROLLED LOW STRENGTH MATERIAL (CLSM) SHALL BE ACCEPTABLE FOR USE AS LOW PERMEABILITY FILL. IF CLSM IS USED, IT SHALL CONFORM TO THE REQUIREMENTS OF SECTION 314 OF THE STATE OF HAWAII DEPARTMENT OF TRANSPORTATION 2005 STANDARD SPECIFICATIONS FOR ROAD AND BRIDGE CONSTRUCTION. IT SHALL HAVE A MINIMUM 28-DAY COMPRESSIVE STRENGTH OF 150 POUNDS PER SQUARE INCH (PSI) AND SHALL BE ABLE TO BE EXCAVATED WITH CONVENTIONAL EARTHWORK EQUIPMENT. IT SHALL CONTAIN ADMIXTURES TO REDUCE THE AMOUNT OF SHRINKAGE.

10. CLSM SHALL BE PLACED IN LIFTS. EACH LIFT SHALL BE ALLOWED TO INITIALLY SET-UP BEFORE PLACING SUBSEQUENT LIFTS TO REDUCE POTENTIALLY OVERSTRESSING THE WALLS. LIFT THICKNESS OF THE CLSM SHALL BE APPROVED BY THE PROJECT STRUCTURAL ENGINEER BASED ON HIS/HER DESIGN REQUIREMENTS FOR THE WALLS

11. SAMPLES OF ALL ON-SITE AND IMPORTED PROPOSED FILL AND BACKFILL MATERIALS SHALL BE INSPECTED AND TESTED BY AN APPROVED, INDEPENDENT, QUALIFIED AND EXPERIENCED GEOTECHNICAL TESTING LABORATORY FOR THEIR SUITABILITY AS FILL AND BACKFILL MATERIALS AND SHALL BE SUBMITTED FOR REVIEW AND APPROVAL BY THE ENGINEER PRIOR TO THEIR USE IN FILLS AT THE SITE.

12. AN ADEQUATE NUMBER OF FIELD DENSITY TESTS SHALL BE CONDUCTED BY AN APPROVED, INDEPENDENT, AND QUALIFIED GEOTECHNICAL TESTING LABORATORY TO CHECK THAT THE REQUIRED DEGREE OF COMPACTION HAS BEEN ACHIEVED IN ACCORDANCE WITH ASTM STANDARD METHODS OR AS SPECIFIED BY THE COUNTY DEPARTMENT OF PUBLIC WORKS, ENGINEERING DIVISION AS FOLLOWS:

    a. EMBANKMENT, STRUCTURAL FILL AND BACKFILL, AND SUBGRADE MATERIALS: 1 COMPACTION TEST PER 600 SQUARE YARDS PER LFT,

    b. AGGREGATE SUBBASE COURSE: 1 COMPACTION TEST PER 400 SQUARE YARDS, 1 GRADATION AND SAND EQUIVALENT TEST PER PROJECT;

    c. AGGREGATE BASE COURSE: 1 COMPACTION TEST PER 300 SQUARE YARDS, 1 GRADATION AND SAND EQUIVALENT TEST PER PROJECT;

    d. ASPHALT CONCRETE PAVEMENT: 3 A.C. CORES FOR THICKNESS AND DENSITY TESTS PER PAVING DAY;

    e. TRENCH BACKFILL MATERIAL: 1 TEST FOR EACH 300 LINEAL FEET OF TRENCH PER LIFT OF MATERIAL.

13. NOTIFY THE COUNTY OF ANY TEST FAILURE AND CORRECT EACH FAILURE PRIOR TO PROCEEDING TO THE NEXT PHASE OF CONSTRUCTION.

14. ALL TEST REPORTS INCLUDING COMPACTION TEST RESULTS SHALL BE CERTIFIED BY THE TESTING LABORATORY AND SUBMITTED TO THE COUNTY'S INSPECTION AGENCY FOR REVIEW AND APPROVAL PRIOR TO COUNTY'S ACCEPTANCE OF WORK.

PREFINAL

SCOTT A. KUNIOKA
LICENSED PROFESSIONAL ENGINEER
No. 7257-C
HAWAII U.S.A.

LICENSE EXPIRATION DATE: 4/30/12

THIS WORK WAS PREPARED BY ME OR UNDER MY SUPERVISION AND CONSTRUCTION OF THIS PROJECT WILL BE UNDER MY OBSERVATION.

SHIMABUKURO, ENDO & YOSHIZAKI, INC.
1126 12th Avenue
Honolulu, Hawaii 96816

COUNTY OF MAUI
DEPARTMENT OF PUBLIC WORKS
HAIKU, MAKAWAO, MAUI, HAWAII

HAIKU ROAD CULVERT REPLACEMENT
JOB NO. 08-11

EARTHWORK NOTES

Date: MARCH 2012
Design By: SAK
Drawn By: CAE

G-2

SHEET 3 OF 36 SHEETS

04/04/12 1:53:34 PM S:\SAK\HAIKU CULVERT\DRAW\03 - NOTES.DWG

WATER POLLUTION & EROSION CONTROL NOTES

A. GENERAL

1. COMPLY WITH SECTION 209 – TEMPORARY WATER POLLUTION, DUST, AND EROSION CONTROL. SECTION 209 DESCRIBES BUT IS NOT LIMITED TO SUBMITTAL REQUIREMENTS, SCHEDULING OF A WATER POLLUTION AND EROSION CONTROL CONFERENCE WITH THE ENGINEER, CONSTRUCTION REQUIREMENTS, METHOD OF MEASUREMENT, AND BASIS OF PAYMENT.

2. FOLLOW THE GUIDELINES IN THE "CONSTRUCTION BEST MANAGEMENT PRACTICES FIELD MANUAL," DATED JANUARY 2008 IN DEVELOPING, INSTALLING AND MAINTAINING THE BEST MANAGEMENT PRACTICES (BMP) FOR THE PROJECT.

3. FOLLOW THE GUIDELINES IN THE CITY AND COUNTY OF HONOLULU'S "RULES RELATING TO SOIL EROSION STANDARDS AND GUIDELINES" ALONG WITH APPLICABLE SOIL EROSION GUIDELINES FOR PROJECTS ON MAUI, MOLOKAI, KAUAI, AND HAWAII.

4. THE ENGINEER MAY ASSESS LIQUIDATED DAMAGES OF UP TO $27,500 FOR NON-COMPLIANCE OF EACH BMP REQUIREMENT AND EACH REQUIREMENT STATED IN SECTION 209, FOR EVERY DAY OF NON-COMPLIANCE. THERE IS NO MAXIMUM LIMIT ON THE AMOUNT ASSESSED PER DAY.

5. THE ENGINEER WILL DEDUCT THE COST ASSESSED FROM THE PROGRESS PAYMENT FOR ALL CITATIONS RECEIVED BY THE DEPARTMENT FOR NON-COMPLIANCE, OR THE CONTRACTOR SHALL REIMBURSE THE COUNTY FOR THE FULL AMOUNT OF OUTSTANDING COST INCURRED BY THE COUNTY.

6. FOR PROJECTS THAT REQUIRE AN NPDES PERMIT FROM THE DEPARTMENT OF HEALTH, INSTALL A RAIN GAGE PRIOR TO ANY FIELD WORK INCLUDING THE INSTALLATION OF ANY SITE-SPECIFIC BEST MANAGEMENT PRACTICES. THE RAIN GAGE SHALL HAVE A TOLERANCE OF AT LEAST 0.05 INCHES OF RAINFALL AND HAVE AN OPENING OF AT LEAST ONE INCH IN DIAMETER. INSTALL THE RAIN GAGE ON THE PROJECT SITE AREA THAT WILL NOT DETER RAINFALL FROM ENTERING THE GAGE OPENING. THE RAIN GAGE INSTALLATION SHALL BE STABLE AND PLUMBED. DO NOT BEGIN FIELD WORK UNTIL THE RAIN GAGE IS INSTALLED AND SITE-SPECIFIC BEST MANAGEMENT PRACTICES ARE IN PLACE.

B. WASTE DISPOSAL

1. WASTE MATERIALS

   COLLECT AND STORE ALL WASTE MATERIALS IN A SECURELY LIDDED METAL DUMPSTER. THE DUMPSTER SHALL MEET ALL LOCAL AND STATE SOLID WASTE MANAGEMENT REGULATIONS. DEPOSIT ALL TRASH AND CONSTRUCTION DEBRIS FROM THE SITE IN THE DUMPSTER. EMPTY THE DUMPSTER A MINIMUM OF TWICE PER WEEK OR AS OFTEN AS IS DEEMED NECESSARY. DO NOT BURY CONSTRUCTION WASTE MATERIALS ONSITE. THE CONTRACTOR'S SUPERVISORY PERSONNEL SHALL BE INSTRUCTED REGARDING THE CORRECT PROCEDURE FOR WASTE DISPOSAL. POST NOTICES STATING THESE PRACTICES IN THE OFFICE TRAILER AND THE CONTRACTOR SHALL BE RESPONSIBLE FOR SEEING THAT THESE PROCEDURES ARE FOLLOWED.

2. HAZARDOUS WASTE

   DISPOSE ALL HAZARDOUS WASTE MATERIALS IN THE MANNER SPECIFIED BY LOCAL OR STATE REGULATIONS AND BY THE MANUFACTURER. THE CONTRACTOR'S SITE PERSONNEL SHALL BE INSTRUCTED IN THESE PRACTICES AND SHALL BE RESPONSIBLE FOR SEEING THAT THESE PRACTICES ARE FOLLOWED.

3. SANITARY WASTE

   COLLECT ALL SANITARY WASTE FROM THE PORTABLE UNITS A MINIMUM OF ONCE PER WEEK, OR AS REQUIRED.

C. EROSION AND SEDIMENT CONTROL INSPECTION AND MAINTENANCE PRACTICES

1. INSPECT ALL CONTROL MEASURES AT LEAST ONCE EACH WEEK AND WITHIN 24 HOURS OF ANY RAINFALL EVENT OF 0.5 INCHES OR GREATER WITHIN A 24 HOUR PERIOD.

2. MAINTAIN ALL MEASURES IN GOOD WORKING ORDER. IF REPAIR IS NECESSARY, IT SHALL BE INITIATED WITHIN 24 HOURS AFTER THE INSPECTION.

3. REMOVE BUILT-UP SEDIMENT FROM SILT FENCE WHEN IT HAS REACHED ONE-THIRD THE HEIGHT OF THE FENCE.

4. INSPECT ALL SILT SCREEN AND FENCE FOR DEPTH OF SEDIMENT AND TEARS TO VERIFY THAT THE FABRIC IS SECURELY ATTACHED TO THE FENCE POSTS OR CONCRETE SLAB AND TO VERIFY THAT THE FENCE POSTS ARE FIRMLY IN THE GROUND. INSPECT AND VERIFY THE BOTTOM OF THE SILT SCREEN IS BURIED A MINIMUM OF 6 INCHES BELOW THE EXISTING GROUND.

5. INSPECT TEMPORARY AND PERMANENT SEEDING AND PLANTING FOR BARE SPOTS, WASHOUTS, AND HEALTHY GROWTH. REPAIR DAMAGED AREAS.

6. MAKE A MAINTENANCE INSPECTION REPORT PROMPTLY AFTER EACH INSPECTION. SUBMIT A COPY TO THE ENGINEER NO LATER THAN ONE WEEK FROM THE DATE OF THE INSPECTION.

7. PROVIDE A STABILIZED CONSTRUCTION ENTRANCE TO REDUCE VEHICLE TRACKING OF SEDIMENTS. INCLUDE STABILIZED CONSTRUCTION ENTRANCE IN THE WATER POLLUTION, DUST, AND EROSION CONTROL SUBMITTALS. MINIMUM LENGTH SHALL BE 50 FEET. MINIMUM WIDTH SHALL BE 12 FEET. MINIMUM DEPTH SHALL BE 8 INCHES AND UNDERLAIN WITH GEOTEXTILE FABRIC. CLEAN THE PAVED STREET ADJACENT TO THE SITE ENTRANCE DAILY OR AS REQUIRED TO REMOVE ANY EXCESS MUD, COLD PLANED MATERIALS, DIRT, OR ROCK TRACKED FROM THE SITE. COVER DUMP TRUCKS HAULING MATERIAL FROM THE CONSTRUCTION SITE WITH TARPAULIN.

8. INCLUDE DESIGNATED CONCRETE WASHOUT AREA(S) IN THE WATER POLLUTION, DUST, AND EROSION CONTROL SUBMITTALS.

9. SUBMIT THE NAME OF A SPECIFIC INDIVIDUAL DESIGNATED RESPONSIBLE FOR INSPECTIONS, MAINTENANCE, AND REPAIR ACTIVITIES AND FILLING OUT THE EROSION AND SEDIMENT CONTROLS INSPECTION AND MAINTENANCE REPORT.

10. PERSONNEL SELECTED FOR THE INSPECTION AND MAINTENANCE RESPONSIBILITIES SHALL RECEIVE TRAINING FROM THE CONTRACTOR. THEY SHALL BE TRAINED IN ALL THE INSPECTION AND MAINTENANCE PRACTICES NECESSARY FOR KEEPING THE EROSION AND SEDIMENT CONTROLS USED ONSITE IN GOOD WORKING ORDER.

11. CONTAIN, REMOVE, AND DISPOSE SLURRY GENERATED FROM SAW CUTTING OF PAVEMENT IN ACCORDANCE WITH APPROVED BMP PRACTICES. PAYMENT FOR CONFINEMENT, REMOVAL, AND DISPOSAL OF SLURRY SHALL BE CONSIDERED INCIDENTAL TO THE VARIOUS CONTRACT ITEMS.

D. GOOD HOUSEKEEPING BEST MANAGEMENT PRACTICES

1. MATERIALS POLLUTION PREVENTION PLAN

   a. APPLICABLE MATERIALS OR SUBSTANCES LISTED BELOW ARE EXPECTED TO BE PRESENT ONSITE DURING CONSTRUCTION. OTHER MATERIALS AND SUBSTANCES NOT LISTED BELOW SHALL BE ADDED TO THE INVENTORY.

CONCRETE	FERTILIZERS
DETERGENTS	PETROLEUM BASED PRODUCTS
CLEANING SOLVENTS	PAINTS (ENAMEL AND LATEX)
METAL STUDS	WOOD
TAR	MASONRY BLOCK

   b. USE MATERIAL MANAGEMENT PRACTICES TO REDUCE THE RISK OF SPILLS OR OTHER ACCIDENTAL EXPOSURE OF MATERIALS AND SUBSTANCES TO STORM WATER RUNOFF. MAKE AN EFFORT TO STORE ONLY ENOUGH PRODUCTS AS IS REQUIRED TO DO THE JOB.

   c. STORE ALL MATERIALS ONSITE IN A NEAT, ORDERLY MANNER IN THEIR APPROPRIATE CONTAINERS AND, IF POSSIBLE, UNDER A ROOF OR OTHER ENCLOSURE

   d. KEEP PRODUCTS IN THEIR ORIGINAL CONTAINERS WITH THE ORIGINAL MANUFACTURER'S LABEL.

   e. DO NOT MIX SUBSTANCES WITH ONE ANOTHER UNLESS RECOMMENDED BY THE MANUFACTURER.

   f. WHENEVER POSSIBLE, USE A PRODUCT UP COMPLETELY BEFORE DISPOSING OF THE CONTAINER.

   g. FOLLOW MANUFACTURER'S RECOMMENDATIONS FOR PROPER USE AND DISPOSAL.

   h. CONDUCT A DAILY INSPECTION TO ENSURE PROPER USE AND DISPOSAL OF MATERIALS ONSITE.

2. HAZARDOUS MATERIAL POLLUTION PREVENTION PLAN

   a. KEEP PRODUCTS IN ORIGINAL CONTAINERS UNLESS THEY ARE NOT RESEALABLE.

   b. RETAIN ORIGINAL LABELS AND MATERIAL SAFETY DATA SHEETS (MSDS).

   c. DISPOSE SURPLUS PRODUCTS ACCORDING TO MANUFACTURER'S INSTRUCTIONS AND LOCAL AND STATE REGULATIONS.

3. ONSITE AND OFFSITE PRODUCT SPECIFIC PLAN

   THE FOLLOWING PRODUCT SPECIFIC PRACTICES SHALL BE FOLLOWED ONSITE:

   a. PETROLEUM BASED PRODUCTS

      MONITOR ALL ONSITE VEHICLES FOR LEAKS AND PERFORM REGULAR PREVENTIVE MAINTENANCE TO REDUCE THE CHANCE OF LEAKAGE. STORE PETROLEUM PRODUCTS IN TIGHTLY SEALED CONTAINERS WHICH ARE CLEARLY LABELED. APPLY ASPHALT SUBSTANCES USED ONSITE ACCORDING TO THE MANUFACTURER'S RECOMMENDATION.

   b. FERTILIZERS

      APPLY FERTILIZERS USED ONLY IN THE MINIMUM AMOUNTS RECOMMENDED BY THE MANUFACTURER. ONCE APPLIED, WORK FERTILIZER INTO THE SOIL TO LIMIT EXPOSURE TO STORM WATER. STORAGE SHALL BE IN A COVERED SHED. TRANSFER THE CONTENTS OF ANY PARTIALLY USED BAGS OF FERTILIZER TO A SEALABLE PLASTIC BIN TO AVOID SPILLS.

   c. PAINTS

      SEAL AND STORE ALL CONTAINERS WHEN NOT REQUIRED FOR USE. DO NOT DISCHARGE EXCESS PAINT TO THE HIGHWAY DRAINAGE SYSTEM. DISPOSE PROPERLY ACCORDING TO THE MANUFACTURER'S INSTRUCTIONS OR STATE AND LOCAL REGULATIONS.

   d. CONCRETE TRUCKS

      WASH OUT OR DISCHARGE CONCRETE TRUCK DRUM WASH WATER ONLY AT A DESIGNATED SITE. DO NOT DISCHARGE WATER IN THE HIGHWAY DRAINAGE SYSTEM OR WATERS OF THE UNITED STATES. CONTACT DRINKING WATER BRANCH, DEPARTMENT OF HEALTH AT 586-4258 TO RECEIVE PERMISSION TO DESIGNATE A DISPOSAL SITE. CLEAN DISPOSAL SITE AS REQUIRED OR AS REQUESTED BY THE OWNER'S REPRESENTATIVE.

4. SPILL CONTROL PLAN

   a. POST A SPILL PREVENTION PLAN TO INCLUDE MEASURES TO PREVENT AND CLEAN UP EACH SPILL.

   b. THE CONTRACTOR SHALL BE THE SPILL PREVENTION AND CLEANUP COORDINATOR. DESIGNATE AT LEAST THREE SITE PERSONNEL WHO SHALL RECEIVE SPILL PREVENTION AND CLEANUP TRAINING. THESE INDIVIDUALS SHALL EACH BECOME RESPONSIBLE FOR A PARTICULAR PHASE OF PREVENTION AND CLEANUP. POST THE NAMES OF RESPONSIBLE SPILL PERSONNEL IN THE MATERIAL STORAGE AREA AND IN THE OFFICE TRAILER ONSITE.

   c. CLEARLY POST MANUFACTURER'S RECOMMENDED METHODS FOR SPILL CLEANUP. MAKE SITE PERSONNEL AWARE OF THE PROCEDURES AND THE LOCATION OF THE INFORMATION AND CLEANUP SUPPLIES.

   d. KEEP MATERIALS AND EQUIPMENT NECESSARY FOR SPILL CLEANUP IN THE MATERIALS STORAGE AREA ONSITE.

   e. CLEAN UP ALL SPILLS IMMEDIATELY AFTER DISCOVERY.

   f. KEEP THE SPILL AREA WELL VENTILATED. PERSONNEL SHALL WEAR APPROPRIATE PROTECTIVE CLOTHING TO PREVENT INJURY FROM CONTACT WITH HAZARDOUS SUBSTANCES.

   g. REPORT SPILLS OF TOXIC HAZARDOUS MATERIAL TO THE APPROPRIATE STATE OR LOCAL GOVERNMENT AGENCY, REGARDLESS OF THE SIZE.

E. PERMIT REQUIREMENTS

1. A NATIONAL POLLUTANT DISCHARGE ELIMINATION SYSTEM (NPDES) PERMIT FOR DISCHARGE ASSOCIATED WITH CONSTRUCTION ACTIVITIES, SECTION 404 (DA), SECTION 401 WQC, AND SCAP PERMITS HAVE BEEN SUBMITTED FOR THIS PROJECT. THE CONTRACTOR SHALL PREPARE HIS BID ACCORDINGLY TO ALLOW ADHERENCE TO ALL OF THE CONDITIONS OF THESE PERMITS, BMPS, AND OTHER REQUIREMENTS. A COPY OF THE PERMITS IS AVAILABLE FOR REVIEW UPON REQUEST.

2. IF AN NPDES PERMIT FOR CONSTRUCTION DEWATERING OR HYDROTESTING WATERS IS REQUIRED, THE CONTRACTOR SHALL BE RESPONSIBLE TO OBTAIN THE PERMIT FROM THE DEPARTMENT OF HEALTH, CLEAN WATER BRANCH.

3. COMPLY WITH ALL OTHER APPLICABLE STATE AND FEDERAL PERMIT CONDITIONS. PERMITS MAY INCLUDE BUT ARE NOT LIMITED TO THE FOLLOWING:

   a. NPDES PERMIT FOR CONSTRUCTION DEWATERING
   b. NPDES PERMIT FOR HYDROTESTING WATERS

PERMITEE NOTES TO CONTROL DRAINAGE & EROSION

1. CONTROL DUST BY MEANS OF WATER WAGONS OR BY INSTALLING TEMPORARY SPRINKLER SYSTEMS, OR BOTH IF NECESSARY.

2. GRADED AREAS SHALL BE THOROUGHLY WATERED AFTER CONSTRUCTION ACTIVITY HAS CEASED FOR THE DAY AND FOR THE WEEKEND AND HOLIDAYS. AVOID OVER-WATERING THAT MAY CAUSE EROSION.

3. ALL EXPOSED AREAS SHALL BE PAVED OR GRASSED AS SOON AS FINISHED GRADING IS COMPLETED.

4. THE CONTRACTOR SHALL BE RESPONSIBLE TO OBTAIN AND PAY FOR THE WATER NECESSARY FOR DUST CONTROL AND IRRIGATION PURPOSES.

5. PROVIDE TEMPORARY BERMS (SAND BAGS) OR OTHER APPROVED MEASURES TO DIVERT OFFSITE RUNOFF AWAY FROM THE GRADED AREAS. FURTHERMORE, ADEQUATE PROVISIONS SHALL BE MADE TO PREVENT SEDIMENT-LADEN RUNOFF FROM LEAVING THE GRADED AREAS SUCH AS INSTALLATION OF SILT FENCES OR GRAVEL BAGS DOWNGRADE OF THE GRADED AREAS.

6. TEMPORARY EROSION CONTROLS SHALL NOT BE REMOVED BEFORE PERMANENT EROSION CONTROLS ARE IN PLACE AND ESTABLISHED. THE CONTRACTOR IS THE SOLE PARTY RESPONSIBLE FOR THE ADEQUACY OF ALL TEMPORARY EROSION CONTROL MEASURES TO PROTECT THE WORK FROM THE EFFECTS OF WATER AND ALSO TO PROTECT ADJACENT PROPERTIES FROM THE EFFECTS OF THE WORK. THE EROSION CONTROL PLAN SHALL INCLUDE BEST MANAGEMENT PRACTICES PURSUANT TO MAUI COUNTY CODE SECTION 20.08.035, CHAPTER 20.08, "SOIL EROSION AND SEDIMENTATION CONTROL," (ORD. NO. 2684) AND FOLLOW GUIDELINES IN THE "CONSTRUCTION BEST MANAGEMENT PRACTICES (BMPS) FIELD MANUAL," DATED JANUARY 2008, REFERRED TO AS "STANDARD CONSTRUCTION BMPS" ELSEWHERE IN THESE PLANS.

7. PRIOR TO ISSUANCE OF THE GRADING PERMIT, THE CONTRACTOR SHALL MEET WITH THE DEVELOPMENT SERVICES ADMINISTRATION AND PROVIDE INFORMATION ON THE SOURCE OF WATER FOR DUST CONTROL AND JUSTIFY THE NUMBER OF WATER TRUCKS TO BE USED FOR THE CLEARING, GRUBBING, AND LOADING OPERATIONS.

8. IF THE CONTRACTOR IS UNABLE TO SATISFACTORILY CONTROL DUST EMISSIONS FROM THE PROJECT SITE, ALL CONSTRUCTION WORK SHALL CEASE EXCEPT FOR WATERING AND OTHER STABILIZATION EFFORT.

9. THE CONTRACTOR SHALL BE RESPONSIBLE FOR IMMEDIATELY CLEANING THE ROADWAY OF MUD OR SILT TRACKED FROM THE PROJECT SITE.

SITE SPECIFIC SPILL PREVENTION PLAN

CONTRACTOR TO SUBMIT A SITE SPECIFIC SPILL PREVENTION PLAN (SSSPP) TO THE WASTEWATER RECLAMATION DIVISION OF THE DEPARTMENT OF ENVIRONMENTAL MANAGEMENT FOR REVIEW AND APPROVAL PRIOR TO ISSUANCE OF A "PERMIT TO PERFORM WORK ON COUNTY HIGHWAY." THE CONTRACTOR IS TO COMPLY WITH ALL CONDITIONS OF THE APPROVED SSSPP.

BEST MANAGEMENT PRACTICES NOTES

1. APPLICABLE SECTIONS, WHETHER CALLED FOR OR NOT ON THIS PLAN OF THE COUNTY STANDARD BEST MANAGEMENT PRACTICES (STD. BMPS), "CONSTRUCTION BEST MANAGEMENT PRACTICES FIELD MANUAL," DATED JANUARY 2008, SHALL BE COMPLIED WITH DURING THE DEVELOPMENT OF THIS PROJECT. SECTIONS, BUT NOT LIMITED TO THE FOLLOWING, ARE APPLICABLE TO THIS PROJECT:

SECTION 6.33 –	PROTECTION OF STOCKPILES
SECTION 6.51 –	TEMPORARY FABRIC DROP INLET PROTECTION
SECTION 6.52 –	TEMPORARY BLOCK AND GRAVEL DROP INLET PROTECTION
SECTION 6.62 –	SEDIMENT FENCE (SILT FENCE)
SECTION 6.70 –	DUST CONTROL
SECTION 6.71 –	GOOD NEIGHBOR BARRIER (DUST SCREEN)
SECTION 6.91 –	SOLID WASTE MANAGEMENT
SECTION 6.92 –	CONCRETE WASTE MANAGEMENT
SECTION 6.93 –	VEHICLE FUEL & MAINTENANCE MANAGEMENT

2. EXCAVATED MATERIALS SHALL BE HAULED OFFSITE FOR DISPOSAL.

3. WASHING OF VEHICLES, CONCRETE TRUCKS, AND EQUIPMENT ON SITE IS PROHIBITED.

4. VEHICLE REFUELING AND MAINTENANCE ONSITE ARE PROHIBITED.

5. FLUSHING AND/OR SWEEPING SEDIMENT AND/OR DEBRIS INTO THE DRAINAGE SYSTEM AND STATE WATERS ARE PROHIBITED.

GRADING NOTES:

1. CONTRACTOR SHALL OBTAIN A GRADING PERMIT FROM THE DEVELOPMENT SERVICES ADMINISTRATION TWO (2) WEEKS PRIOR TO COMMENCEMENT OF ANY GRADING OR GRUBBING.

2. CONTRACTOR SHALL BE REQUIRED TO SUBMIT A SATISFACTORY GRADING WORK METHOD TO MINIMIZE DUST POLLUTION BEFORE A GRADING PERMIT IS ISSUED.

3. ALL GRADING WORK, INCLUDING EMBANKMENT REPAIRS, SHALL BE DONE IN ACCORDANCE WITH THE GRADING ORDINANCE OF THE COUNTY OF MAUI, AS AMENDED, AND "THE "FINAL REPORT GEOTECHNICAL CONSULTATION" FOR THE PROJECT PREPARED BY PACIFIC GEOTECHNICAL ENGINEERS, INC., EXCEPT AS MODIFIED BELOW.

4. CONTRACTOR SHALL PERFORM GRADING OPERATION SO AS TO CAUSE NO FALLING ROCKS, SOIL, OR DEBRIS IN ANY FORM TO FALL, SLIDE, OR FLOW ONTO ADJOINING PROPERTIES, STREETS, OR NATURAL WATERCOURSES. SHOULD SUCH VIOLATIONS OCCUR, THE CONTRACTOR MAY BE CITED AND THE CONTRACTOR SHALL IMMEDIATELY MAKE ALL REMEDIAL ACTIONS NECESSARY.

5. ADEQUATE PROVISIONS SHALL BE MADE TO PREVENT SURFACE WATERS FROM DAMAGING THE CUT FACE OF AN EXCAVATION OR THE SLOPED SURFACES OF A FILL. FURTHERMORE, ADEQUATE PROVISIONS SHALL BE MADE TO PREVENT SEDIMENT-LADEN RUNOFF FROM LEAVING THE SITE.

6. ALL SLOPES AND EXPOSED AREAS SHALL BE SODDED OR PLANTED AS SOON AS FINAL GRADES HAVE BEEN ESTABLISHED. PLANTING SHALL NOT BE DELAYED UNTIL ALL GRADING WORK HAS BEEN COMPLETED. GRADING TO FINAL GRADE SHALL BE CONTINUOUS, AND ANY AREA WITHIN WHICH WORK HAS BEEN INTERRUPTED OR DELAYED SHALL BE PLANTED.

7. FILL ON SLOPES STEEPER THAN 5:1 SHALL BE KEYED.

8. THE COUNTY SHALL BE INFORMED OF THE LOCATION OF THE BORROW/DISPOSAL SITE FOR THE PROJECT WHEN THE APPLICATION FOR A GRADING PERMIT IS MADE. THE BORROW/DISPOSAL SITE MUST ALSO FULFILL THE REQUIREMENTS OF THE GRADING ORDINANCE.

9. NO GRADING WORK SHALL BE DONE ON SATURDAYS, SUNDAYS, AND HOLIDAYS AT ANY TIME WITHOUT PRIOR NOTICE TO THE DIRECTOR, DEPARTMENT OF PUBLIC WORKS PROVIDED SUCH GRADING WORK IS ALSO IN CONFORMANCE WITH THE COMMUNITY NOISE CONTROL STANDARDS CONTAINED IN THE HAWAII ADMINISTRATIVE RULES, TITLE 11, CHAPTER 46, "COMMUNITY NOISE CONTROL."

10. THE LIMITS OF THE AREA TO BE GRADED SHALL BE FLAGGED BEFORE COMMENCEMENT OF THE GRADING WORK.

11. WHERE APPLICABLE AND FEASIBLE, THE MEASURES TO CONTROL EROSION AND OTHER POLLUTANTS SHALL BE IN PLACE BEFORE ANY EARTH MOVING PHASE OF THE GRADING IS INITIATED.

12. TEMPORARY EROSION CONTROLS SHALL NOT BE REMOVED BEFORE PERMANENT EROSION CONTROLS ARE IN PLACE AND ESTABLISHED.

13. TEMPORARY EROSION CONTROL PROCEDURES SHALL BE SUBMITTED FOR APPROVAL PRIOR TO APPLICATION FOR GRADING PERMIT.

14. IF THE GRADING WORK INVOLVES CONTAMINATED SOIL, THEN ALL GRADING WORK SHALL BE DONE IN CONFORMANCE WITH APPLICABLE STATE AND FEDERAL REQUIREMENTS.

15. ALL GRADING AND CONSTRUCTION WORK SHALL IMPLEMENT MEASURES TO ENSURE THAT THE DISCHARGE OF POLLUTANTS FROM THE CONSTRUCTION SITE WILL BE REDUCED TO THE MAXIMUM EXTENT PRACTICABLE AND WILL NOT CAUSE OR CONTRIBUTE TO AN EXCEEDANCE OF WATER QUALITY STANDARDS.

16. NONCOMPLIANCE TO ANY OF THE ABOVE REQUIREMENTS SHALL MEAN IMMEDIATE SUSPENSION OF ALL WORK, AND REMEDIAL WORK SHALL COMMENCE IMMEDIATELY. ALL COSTS INCURRED SHALL BE BILLED TO THE VIOLATOR. FURTHERMORE, VIOLATORS SHALL BE SUBJECTED TO ADMINISTRATIVE, CIVIL, AND/OR CRIMINAL PENALTIES.

RECOMMENDED SEQUENCE FOR IMPLEMENTING BMPS:

1. INSTALL TEMPORARY SILT FENCES AND FILTER BERM AROUND PORTIONS OF THE WORK AREA AS REQUIRED.

2. INSTALL ANY OTHER STRUCTURAL BMPS AS NEEDED.

3. INSTALL UTILITY SERVICES, IRRIGATION, AND DRAINAGE FACILITIES.

4. IN AREAS OF PAVING, TEMPORARY STABILIZATION MUST BE MAINTAINED UNTIL SUCH TIME THE PERMANENT STABILIZATION MEASURES ARE INSTALLED. IF PAVING WILL NOT BE PERFORMED WITHIN 90 DAYS, TEMPORARY A.C. PAVING OR AGGREGATE BASE COURSE SHALL BE PROVIDED.

5. REMOVE TEMPORARY STRUCTURAL BMPS ONLY UPON PLACEMENT OF STABILIZATION MEASURES SUCH AS AGGREGATE BASE, ASPHALT CONCRETE BASE COURSE, A.C PAVING, AND CONCRETE IMPROVEMENTS.

PREFINAL

SCOTT A. KURIOKA
LICENSED PROFESSIONAL ENGINEER
No. 7257-C
HAWAII U.S.A.

LICENSE EXPIRATION DATE: 4/30/12

THIS WORK WAS PREPARED BY ME OR UNDER MY SUPERVISION AND CONSTRUCTION OF THIS PROJECT WILL BE UNDER MY OBSERVATION.

SHIMABUKURO, ENDO & YOSHIZAKI, INC.
1125 12th Avenue
Honolulu, Hawaii 96816

COUNTY OF MAUI
DEPARTMENT OF PUBLIC WORKS
HAIKU, MAKAWAO, MAUI, HAWAII

HAIKU ROAD CULVERT REPLACEMENT
JOB NO. 08-11

EROSION CONTROL, BMP & GRADING NOTES

Date: MARCH 2012
Design By: SAK
Drawn By: CAE

G-3

SHEET 4 OF 38 SHEETS

04/04/12 1:53:39 PM S:\SAK\HAIKU CULVERT\DRAW\04 – NOTES.DWG

BORING 1 — SURFACE ELEVATION + 490± FEET MEAN SEA LEVEL

LAB DATA: MOISTURE CONTENT %	LAB DATA: DRY DENSITY (pcf)	CORE INFO: CORE TYPE	CORE INFO: RECOVERY %	CORE INFO: RQD %	BLOWS/FT.	DEPTH (feet)	SOIL CLASS	DESCRIPTION
							GP	6.5 inches of asphaltic concrete
							GM	Dark brownish gray poorly graded, coarse basaltic gravel, with basaltic cobbles and silt, moist (fill)
34	87				15	4	MH	Mottled brown and reddish yellow elastic silt, stiff, with gray and brown highly to completely weathered basaltic gravel, moist (fill)
					17			grades with rounded basaltic gravel
						8		
30	81				7			grades medium stiff
						12		
29	89				16			
						16		
36	80				19	20	ML	Mottled brownish gray, reddish brown, and brown silt, stiff, moist (saprolite)
						24		
39	83				42			grades mottled brownish gray and dark reddish brown, and very stiff
						28		
40	80				32			grades mottled gray and dark gray
						32		(Water level at 0830 hours on 07-29-10)
42	83				63			grades saturated and hard
						36		
62	66				9	40	MH	Mottled reddish brown and brown elastic silt, medium stiff, saturated (completely weathered clinker)
							MH	Mottled grayish brown and light reddish brown elastic silt, stiff, saturated (saprolite)
						44		
64	65				69			grades hard
						48		
30	97				75/3"			
						52		
					102/2"			grades mottled grayish brown and dark reddish brown
						56		
34					40/2"	60		
							MH	Mottled brownish gray and reddish brown elastic silt, hard, saturated (completely weathered clinker)
48					33	64		
							MH	Gray elastic silt, hard, saturated (saprolite)
						68		Gray basalt, soft, moderately vesicular, highly to completely weathered
					81/5"			Boring completed at 69.4 feet on 07-29-10.

BORING 2 — SURFACE ELEVATION + 456± FEET MEAN SEA LEVEL

LAB DATA: MOISTURE CONTENT %	LAB DATA: DRY DENSITY (pcf)	CORE INFO: CORE TYPE	CORE INFO: RECOVERY %	CORE INFO: RQD %	BLOWS/FT.	DEPTH (feet)	SOIL CLASS	DESCRIPTION
							ML	Dark brown sandy silt, soft, moist (younger alluvium)
49	73				5	4		
								(Water level at 1430 hours on 07-30-10)
28	99				76		GM	Dark brown, gray, and reddish yellow silty basaltic gravel, dense, subrounded to rounded, highly weathered, with basaltic sand and soft basaltic cobbles, saturated (younger alluvium)
24	110				75	8	ML	grades gray
38					16			Gray and dark reddish brown sandy silt, stiff to very stiff, with highly weathered basaltic sand, saturated (saprolite)
						12		
25	108				52	16		grades hard
								Gray basalt, soft, highly weathered
					155/4"	20		Boring completed at 20.3 feet on 07-31-10.

BORING 3 — SURFACE ELEVATION + 458± FEET MEAN SEA LEVEL

LAB DATA: MOISTURE CONTENT %	LAB DATA: DRY DENSITY (pcf)	CORE INFO: CORE TYPE	CORE INFO: RECOVERY %	CORE INFO: RQD %	BLOWS/FT.	DEPTH (feet)	SOIL CLASS	DESCRIPTION
35	68				2/8"		GP	Grayish brown and reddish yellow poorly graded basaltic gravel, with subrounded to rounded, with basaltic sand and cobbles, moist (younger alluvium)
							ML	Dark brown to yellowish red sandy silt, soft, with highly to completely weathered basaltic sand, moist (younger alluvium)
						4		
					16			grades stiff and with soft basaltic cobbles
							GM	(Water level at 0900 hours on 08-01-10)
26		NX	85	0	60/6"	8		Grayish brown to reddish yellow silty basaltic gravel, dense, subrounded to rounded, with basaltic sand and basaltic cobbles, saturated (younger alluvium)
							ML	grades with hard basaltic cobbles
40	84				103			Mottled grayish brown and dark yellowish brown sandy silt, hard, saturated (saprolite)
						12		
26	101				20	16		grades stiff
								Gray basalt, soft, highly weathered
					51/2"	20		Boring completed at 20.6 feet on 08-01-10.

BORING LOGS LEGEND

- ■ – 3.3-INCH OUTSIDE DIAMETER RELATIVELY UNDISTURBED SAMPLE
- ⊠ – DISTURBED SAMPLE (3.3-INCH O.D.)
- □ – SAMPLE LOST DURING EXTRACTION
- ◪ – 2-INCH OUTSIDE DIAMETER STANDARD PENETRATION TEST SPLIT-SPOON SAMPLER
- I – CORE RUN

DRIVING ENERGY: 140-LB. DROPPING 30 INCHES

LEGEND

EXISTING (SLANT LETTERING)

- UTILITY POLE & STREET LIGHT
- SIGN
- TRAVERSE STATION
- TREE
- SLOPE
- CRM WALL
- WOOD FENCE
- EXISTING GUARDRAIL & POSTS
- EXISTING ELECTRICAL LINE (OVERHEAD)
- EXISTING WATER LINE W/ SIZE
- PROPERTY LINE

NEW (VERTICAL LETTERING)

- DIRECTION OF RUNOFF FLOW
- D / C-2 — DETAIL NUMBER OR SECTION LETTER; DRAWING ON WHICH DETAIL OR SECTION IS SHOWN
- CONCRETE IMPROVEMENT
- GROUTED RIPRAP
- CURVE W/ DESIGNATION
- BORING LOCATION W/ DESIGNATION
- TEMPORARY SILT FENCE
- DEMO & REMOVE EXISTING IMPROVEMENT AS NOTED
- LIMITS OF CLEARING &/OR CONSTRUCTION
- LOCATION OF INCLINOMETER
- LOCATION OF TRIAL DRILLED SHAFT

ABBREVIATIONS

EXISTING (SLANT LETTERING)

A.C.	ASPHALT CONCRETE
APPROX.	APPROXIMATE
BOT.	BOTTOM
BW	BOTTOM WALL
℄	CENTER LINE
COL	COLUMN
CONC.	CONCRETE
CRM	CEMENT RUBBLE MASONRY
Ø	DIAMETER OR DRAIN
DWY.	DRIVEWAY
E	ELECTRIC
ELEV./EL.	ELEVATION
EXIST.	EXISTING
G.P.	GATE POST
GD	GROUND
G.W.	GUY WIRE
H	HEIGHT
INV.	INVERT
MB	MAIL BOX
NOM.	NOMINAL
O/H	OVERHEAD
PAV'T.	PAVEMENT
REF.	REFLECTOR
R.C.	REINFORCED CONCRETE
SHLDR	SHOULDER
S.L.	STREET LIGHT
STA.	STATION
T.M.K.	TAX MAP KEY
T	TELEPHONE
TW	TOP WALL
TYP.	TYPICAL
U.P.	UTILITY POLE
W/	WITH
WM	WATER METER
WV	WATER VALVE

NEW (VERTICAL LETTERING)

A.C.	ASPHALT CONCRETE
APPROX.	APPROXIMATE
℄	BASELINE
BOT.	BOTTOM
BCW	BOTTOM OF CUTOFF WALL
BW	BOTTOM OF WALL
C	CHORD
℄	CENTER LINE
CLF	CHAIN LINK FENCE
CLR.	CLEAR
CONC.	CONCRETE
CONT.	CONTINUOUS
CRM	CEMENT RUBBLE MASONRY
CW	CUTOFF WALL
CU.FT	CUBIC FOOT
CY	CUBIC YARD
DEMO	DEMOLISH
DET.	DETAIL
DIA.	DIAMETER
DWG.	DRAWING
E.F.	EACH FACE
E.P.	EDGE OF PAVEMENT
ELEV.	EVEVATION
EXIST.	EXISTING
FG	FINISH GRADE
FT.	FOOT OR FEET
GEN.	GENERAL
GRD	GROUND
H/ HT.	HEIGHT
H/ HORZ.	HORIZONTAL
I/ INV.	INVERT
L	LENGTH OF CURVE
L.F.	LINEAR FEET
MAX.	MAXIMUM
MPH	MILES PER HOUR
MIN.	MINIMUM
NO.	NUMBER
NOM.	NOMINAL
O.C.	ON CENTERS
O.D.	OUTSIDE DIAMETER
PC	POINT OF CURVATURE
PCC	POINT OF COMPOUND CURVATURE
PI	POINT OF INTERSECTION
PT	POINT OF TANGENCY
PVC	POLYVINYL CHLORIDE
R	RADIUS
R.C.	REINFORCED CONCRETE
R/W	RIGHT OF WAY
REF.	REFLECTOR
SF	SQUARE FEET
SHT.	SHEET
SHLDR	SHOULDER
SIM.	SIMILAR
SPA.	SPACES
SPEC.	SPECIAL
SQ.	SQUARE
STA.	STATION
STRUCT.	STRUCTURAL
S.Y.	SQUARE YARD
T	TANGENT
TC	TOP OF CONCRETE
TCW	TOP OF CUTOFF WALL
TGRT	TOP OF GROUTED RIPRAP TRANSITION
T.M.K	TAX MAP KEY
TW	TOP OF WALL
TYP.	TYPICAL
V/ VERT.	VERTICAL
W	WIDTH
W/	WITH
&	AND
@	AT
%	PERCENT
±	PLUS OR MINUS
Δ	CURVE ANGLE

NOTES:

1. LOGS OF BORINGS WERE TAKEN FROM THE "FINAL REPORT GEOTECHNICAL CONSULTATION HAIKU ROAD AND DRAINAGE IMPROVEMENTS" FOR THE PROJECT, PREPARED BY PACIFIC GEOTECHNICAL ENGINEERS, INC.
2. THE LOGS OF BORINGS INDICATE THE SUBSURFACE CONDITIONS ENCOUNTERED ONLY AT THE LOCATIONS WHERE THE BORINGS WERE DRILLED AND AT THE TIMES DESIGNATED ON THE LOGS, AND MAY NOT REPRESENT CONDITIONS AT OTHER LOCATIONS OR AT OTHER TIMES. SUBSURFACE AND GROUNDWATER CONDITIONS MAY CHANGE WITH THE PASSAGE OF TIME, IMPROVEMENTS CONSTRUCTED AT THE PROPERTY, AND CHANGES IN SURFACE DRAINAGE AND IRRIGATION PATTERNS.
3. THE BORING LOGS ARE FURNISHED FOR THE CONVENIENCE OF THE BIDDER. NO ASSURANCE IS GIVEN THAT THE SUBSURFACE OR GROUNDWATER CONDITIONS SHOWN ON THE BORING LOGS ARE REPRESENTATIVE OF THE CONDITIONS TO BE ENCOUNTERED DURING CONSTRUCTION. THE BIDDER IS SOLELY RESPONSIBLE FOR ALL ASSUMPTIONS, DEDUCTIONS, OR CONCLUSIONS WHICH HE MAY MAKE OR DERIVE FROM HIS EXAMINATION OF THE SUBSURFACE INFORMATION AND DATA FURNISHED HEREIN.
4. FOR LOCATIONS OF BORINGS SEE DRAWINGS C-2.
5. FOR UNIFIED SOIL CLASSIFICATION SYSTEM AND ROCK DESCRIPTION SYSTEM SEE PLATES A-2.1 AND A-3, RESPECTIVELY, IN THE "FINAL REPORT GEOTECHNICAL CONSULTATION" FOR THE PROJECT.

PREFINAL

SCOTT A. KUNIOKA — LICENSED PROFESSIONAL ENGINEER No. 7257-C — HAWAII U.S.A.

LICENSE EXPIRATION DATE: 4/30/12

THIS WORK WAS PREPARED BY ME OR UNDER MY SUPERVISION AND CONSTRUCTION OF THIS PROJECT WILL BE UNDER MY OBSERVATION.

SHIMABUKURO, ENDO & YOSHIZAKI, INC.
1126 12th Avenue
Honolulu, Hawaii 96816

COUNTY OF MAUI
DEPARTMENT OF PUBLIC WORKS
HAIKU, MAKAWAO, MAUI, HAWAII

HAIKU ROAD CULVERT REPLACEMENT
JOB NO. 08-11

BORING LOGS, LEGENDS, & ABREVIATIONS

Date: MARCH 2012
Design By: SAK
Drawn By: CAE

G-4

SHEET 5 OF 36 SHEETS

04/04/12 1:53:44 PM S:\SAK\HAIKU CULVERT\DRAW\05 - BORING LOGS.DWG

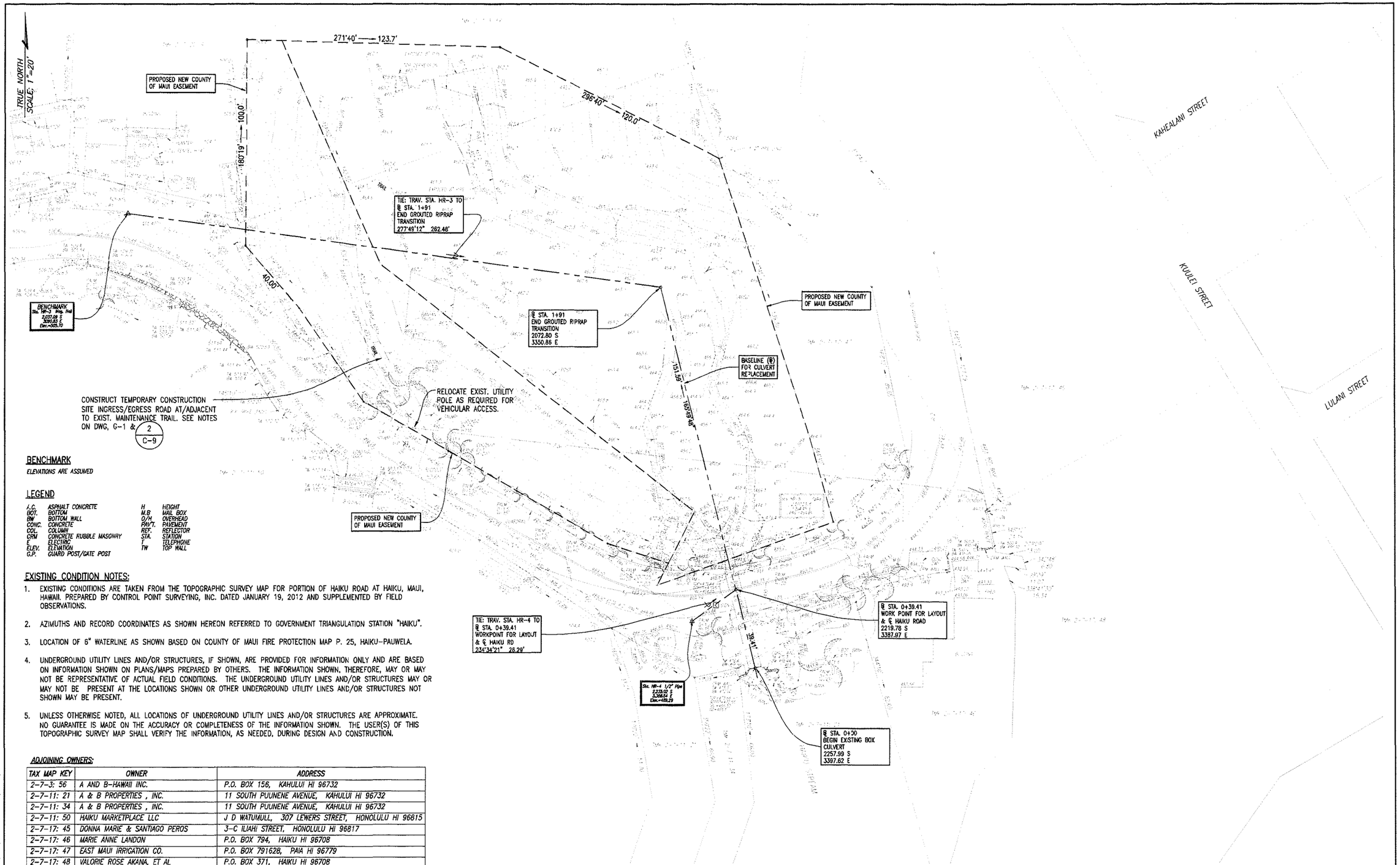

BENCHMARK

ELEVATIONS ARE ASSUMED

LEGEND

A.C.	ASPHALT CONCRETE	H	HEIGHT
BOT.	BOTTOM	M.B	MAIL BOX
BW	BOTTOM WALL	O/H	OVERHEAD
CONC.	CONCRETE	PAV'T.	PAVEMENT
COL.	COLUMN	REF.	REFLECTOR
CRM	CONCRETE RUBBLE MASONRY	STA.	STATION
E	ELECTRIC	T	TELEPHONE
ELEV.	ELEVATION	TW	TOP WALL
G.P.	GUARD POST/GATE POST		

EXISTING CONDITION NOTES:

1. EXISTING CONDITIONS ARE TAKEN FROM THE TOPOGRAPHIC SURVEY MAP FOR PORTION OF HAIKU ROAD AT HAIKU, MAUI, HAWAII. PREPARED BY CONTROL POINT SURVEYING, INC. DATED JANUARY 19, 2012 AND SUPPLEMENTED BY FIELD OBSERVATIONS.
2. AZIMUTHS AND RECORD COORDINATES AS SHOWN HEREON REFERRED TO GOVERNMENT TRIANGULATION STATION "HAIKU".
3. LOCATION OF 6" WATERLINE AS SHOWN BASED ON COUNTY OF MAUI FIRE PROTECTION MAP P. 25, HAIKU-PAUWELA.
4. UNDERGROUND UTILITY LINES AND/OR STRUCTURES, IF SHOWN, ARE PROVIDED FOR INFORMATION ONLY AND ARE BASED ON INFORMATION SHOWN ON PLANS/MAPS PREPARED BY OTHERS. THE INFORMATION SHOWN, THEREFORE, MAY OR MAY NOT BE REPRESENTATIVE OF ACTUAL FIELD CONDITIONS. THE UNDERGROUND UTILITY LINES AND/OR STRUCTURES MAY OR MAY NOT BE PRESENT AT THE LOCATIONS SHOWN OR OTHER UNDERGROUND UTILITY LINES AND/OR STRUCTURES NOT SHOWN MAY BE PRESENT.
5. UNLESS OTHERWISE NOTED, ALL LOCATIONS OF UNDERGROUND UTILITY LINES AND/OR STRUCTURES ARE APPROXIMATE. NO GUARANTEE IS MADE ON THE ACCURACY OR COMPLETENESS OF THE INFORMATION SHOWN. THE USER(S) OF THIS TOPOGRAPHIC SURVEY MAP SHALL VERIFY THE INFORMATION, AS NEEDED, DURING DESIGN AND CONSTRUCTION.

ADJOINING OWNERS:

TAX MAP KEY	OWNER	ADDRESS
2-7-3: 56	A AND B-HAWAII INC.	P.O. BOX 156, KAHULUI HI 96732
2-7-11: 21	A & B PROPERTIES , INC.	11 SOUTH PUUNENE AVENUE, KAHULUI HI 96732
2-7-11: 34	A & B PROPERTIES , INC.	11 SOUTH PUUNENE AVENUE, KAHULUI HI 96732
2-7-11: 50	HAIKU MARKETPLACE LLC	J D WATUMULL, 307 LEWERS STREET, HONOLULU HI 96815
2-7-17: 45	DONNA MARIE & SANTIAGO PEROS	3-C ILIAHI STREET, HONOLULU HI 96817
2-7-17: 46	MARIE ANNE LANDON	P.O. BOX 794, HAIKU HI 96708
2-7-17: 47	EAST MAUI IRRIGATION CO.	P.O. BOX 791628, PAIA HI 96779
2-7-17: 48	VALORIE ROSE AKANA, ET AL	P.O. BOX 371, HAIKU HI 96708
2-7-20: 9	ALICE AND GEORGE M. FUKUSHIMA, ET AL	196 ELILANI STREET, MAKAWAO HI 96768

INFORMATION OBTAINED FROM COUNTY OF MAUI TAX MAP RECORDS

GRAPHIC SCALE:

1" = 20' 20' 0 20' 40'

EXISTING CONDITIONS & BASELINE LAYOUT DATA 1 C-1

1" = 20'-0"

PREFINAL

SCOTT A. KUNIOKA LICENSED PROFESSIONAL ENGINEER No. 7257-C HAWAII U.S.A.

LICENSE EXPIRATION DATE: 4/30/12

THIS WORK WAS PREPARED BY ME OR UNDER MY SUPERVISION AND CONSTRUCTION OF THIS PROJECT WILL BE UNDER MY OBSERVATION.

SHIMABUKURO, ENDO & YOSHIZAKI, INC.
1125 12th Avenue
Honolulu, Hawaii 96816

COUNTY OF MAUI
DEPARTMENT OF PUBLIC WORKS
HAIKU, MAKAWAO, MAUI, HAWAII

HAIKU ROAD CULVERT REPLACEMENT
JOB NO. 08-11

EXISTING CONDITIONS & BASELINE LAYOUT DATA

Date: MARCH 2012
Design By: SAK
Drawn By: CAE

C-1

SHEET 6 OF 38 SHEETS

04/04/12 1:53:50 PM S:\SAK\HAIKU CULVERT\DRAW\06 - EXISTING CONDITIONS.DWG

TRUE NORTH
SCALE: 1" = 10'

CURVE (1) @E.P.
Δ= 40°4'
R= 100.00'
T= 36.63'
C= 68.78'
L= 70.22'

CURVE (1B) @E.P.
Δ= 18°30'
R= 100.00'
T= 16.28'
C= 32.14'
L= 32.28'

CURVE (1A) @E.P.
Δ= 21°44'
R= 100.00'
T= 19.20'
C= 37.71'
L= 37.94'

CURVE (2) @ E.P.
Δ= 18°58'
R= 70.00'
T= 11.69'
C= 23.07'
L= 23.18'

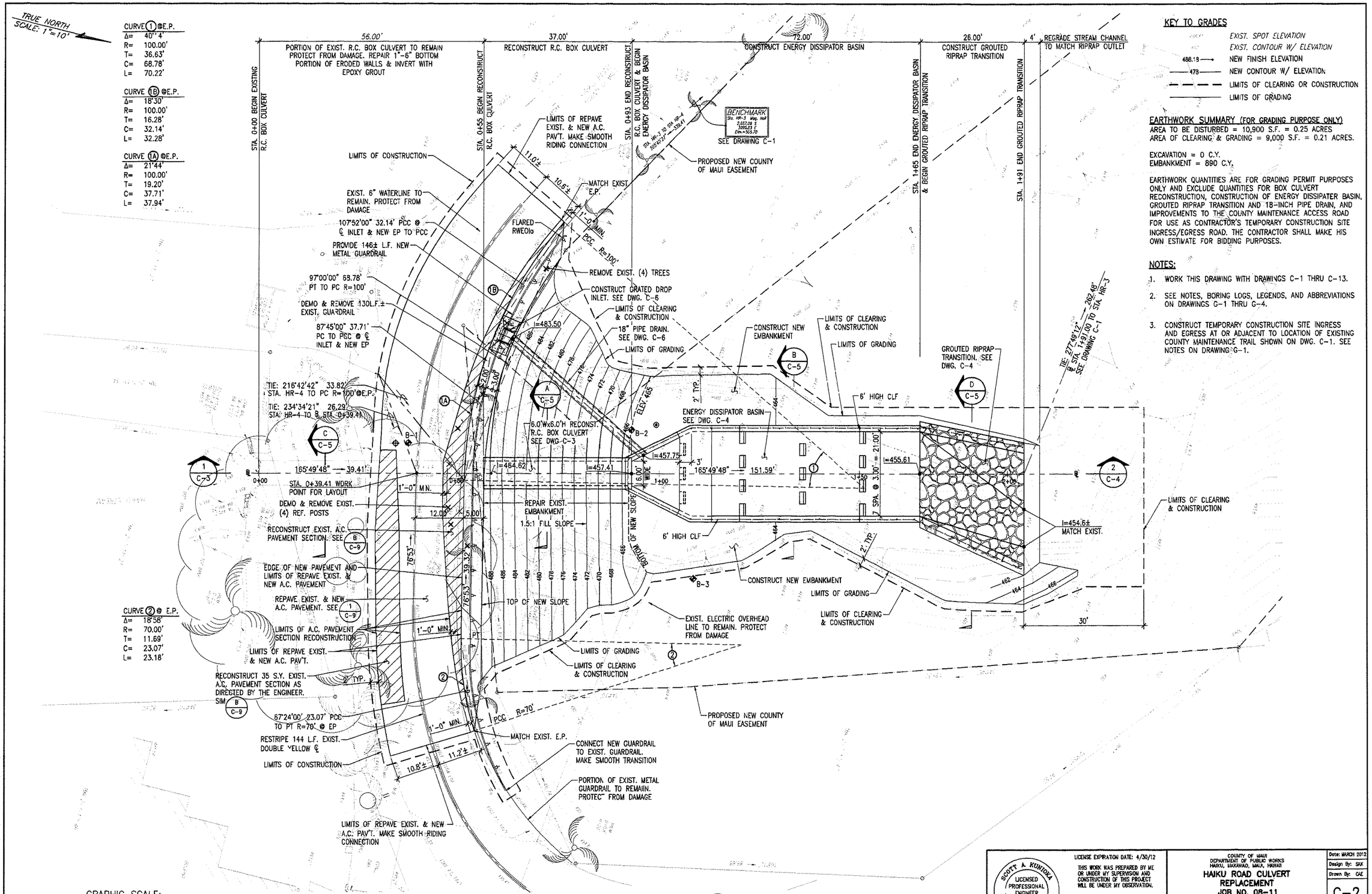

SITEWORK PLAN (1 / C-1)
1" = 10'-0"

KEY TO GRADES

- EXIST. SPOT ELEVATION
- EXIST. CONTOUR W/ ELEVATION
- 488.18 → NEW FINISH ELEVATION
- —473— NEW CONTOUR W/ ELEVATION
- LIMITS OF CLEARING OR CONSTRUCTION
- LIMITS OF GRADING

EARTHWORK SUMMARY (FOR GRADING PURPOSE ONLY)

AREA TO BE DISTURBED = 10,900 S.F. = 0.25 ACRES
AREA OF CLEARING & GRADING = 9,000 S.F. = 0.21 ACRES.

EXCAVATION = 0 C.Y.
EMBANKMENT = 890 C.Y.

EARTHWORK QUANTITIES ARE FOR GRADING PERMIT PURPOSES ONLY AND EXCLUDE QUANTITIES FOR BOX CULVERT RECONSTRUCTION, CONSTRUCTION OF ENERGY DISSIPATER BASIN, GROUTED RIPRAP TRANSITION AND 18-INCH PIPE DRAIN, AND IMPROVEMENTS TO THE COUNTY MAINTENANCE ACCESS ROAD FOR USE AS CONTRACTOR'S TEMPORARY CONSTRUCTION SITE INGRESS/EGRESS ROAD. THE CONTRACTOR SHALL MAKE HIS OWN ESTIMATE FOR BIDDING PURPOSES.

NOTES:

1. WORK THIS DRAWING WITH DRAWINGS C-1 THRU C-13.
2. SEE NOTES, BORING LOGS, LEGENDS, AND ABBREVIATIONS ON DRAWINGS G-1 THRU G-4.
3. CONSTRUCT TEMPORARY CONSTRUCTION SITE INGRESS AND EGRESS AT OR ADJACENT TO LOCATION OF EXISTING COUNTY MAINTENANCE TRAIL SHOWN ON DWG. C-1. SEE NOTES ON DRAWING G-1.

PREFINAL

SCOTT A. KUNIOKA
LICENSED PROFESSIONAL ENGINEER
No. 7257-C
HAWAII U.S.A.

LICENSE EXPIRATION DATE: 4/30/12
THIS WORK WAS PREPARED BY ME OR UNDER MY SUPERVISION AND CONSTRUCTION OF THIS PROJECT WILL BE UNDER MY OBSERVATION.

SHIMABUKURO, ENDO & YOSHIZAKI, INC.
1126 12th Avenue
Honolulu, Hawaii 96816

COUNTY OF MAUI
DEPARTMENT OF PUBLIC WORKS
HAIKU, MAKAWAO, MAUI, HAWAII

HAIKU ROAD CULVERT REPLACEMENT
JOB NO. 08-11

SITEWORK PLAN

Date: MARCH 2012
Design By: SAK
Drawn By: CAE

C-2

SHEET 7 OF 36 SHEETS

04/04/12 1:53:55 PM S:\SAK\HAIKU CULVERT\DRAW\07 - SITE PLAN.DWG

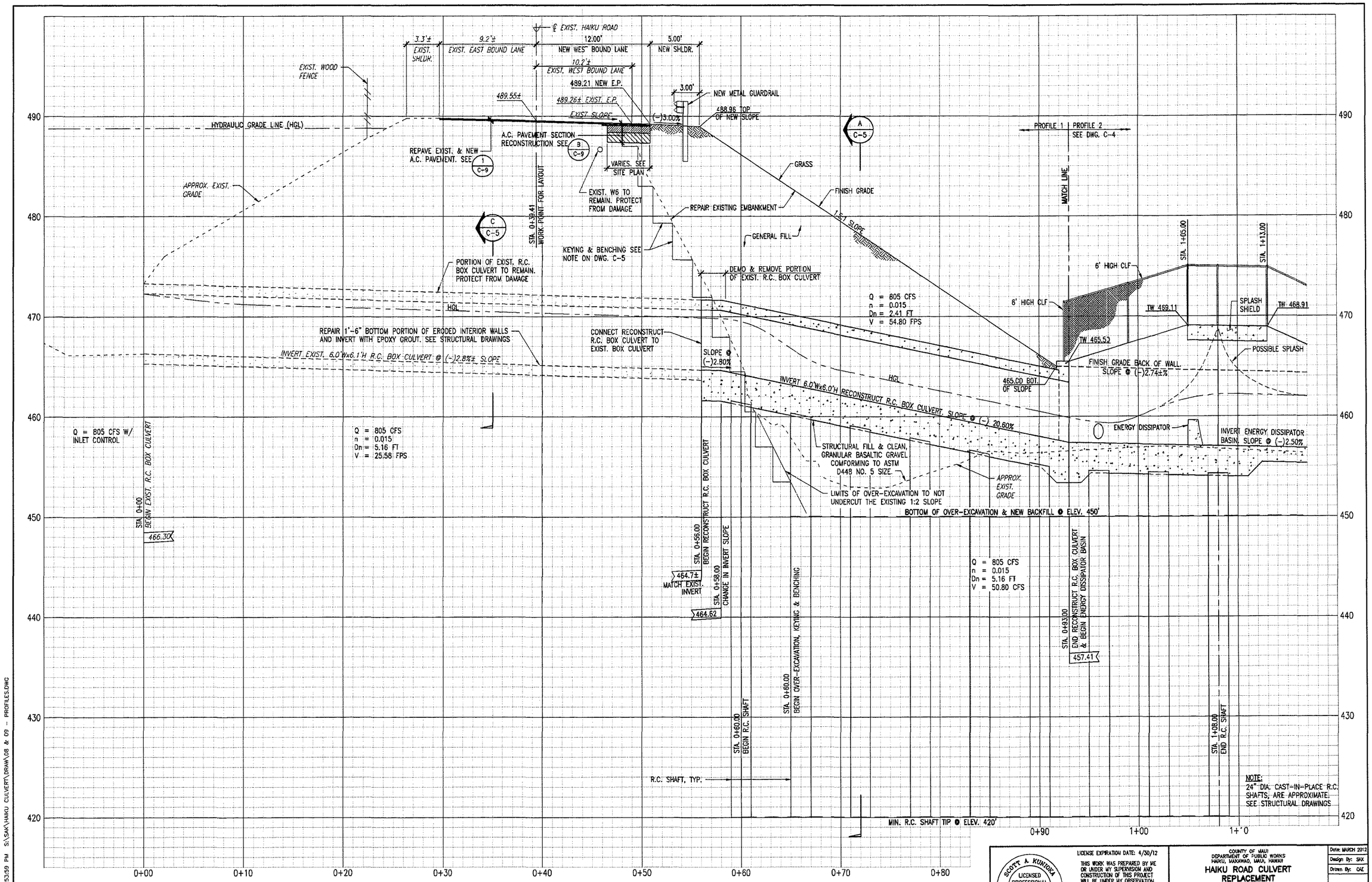

GRAPHIC SCALE:
1" = 4'
4' 0 4' 8'

PROFILE 1
SCALE: 1"=4'-0"
C-3

PREFINAL

SCOTT A. KUNIOKA
LICENSED PROFESSIONAL ENGINEER
No. 7257-C
HAWAII, U.S.A.

LICENSE EXPIRATION DATE: 4/30/12

THIS WORK WAS PREPARED BY ME OR UNDER MY SUPERVISION AND CONSTRUCTION OF THIS PROJECT WILL BE UNDER MY OBSERVATION.

SHIMABUKURO, ENDO & YOSHIZAKI, INC.
1126 12th Avenue
Honolulu, Hawaii 96816

COUNTY OF MAUI
DEPARTMENT OF PUBLIC WORKS
HAIKU, MAKAWAO, MAUI, HAWAII

HAIKU ROAD CULVERT REPLACEMENT
JOB NO. 08-11

PROFILE 1

Date: MARCH 2012
Design By: SKK
Drawn By: CAE
C-3
SHEET 8 OF 36 SHEETS

04/04/12 1:53:59 PM S:\SAK\HAIKU CULVERT\DRAW\08 & 09 - PROFILES.DWG

PROFILE 1 | PROFILE 2
SEE DWG. C-3

MATCH LINE

6' HIGH CLF

STA. 1+05.00

STA. 1+13.00

STA. 1+20.00

B
C-5

D
C-5

FINISH GRADE

465.00 BOT. OF SLOPE

1.5:1 SLOPE

TW 465.50

TW 469.11

SPLASH SHIELD

TW 468.91

POSSIBLE SPLASH

TOP ENERGY DISSIPATOR BASIN WALL

TW 465.74

TW 464.99

6' HIGH CLF

FINISH GRADE BACK OF WALL, SLOPE @ (-)2.74±%

TW, FG, & TGRT 463.00

TOP GROUTED RIPRAP TRANSITION

TGRT 462.00

INVERT 6.0'Wx6.0'H RECONSTRUCT R.C. BOX CULVERT, SLOPE @ (-)20.60%

3.00'

18" PIPE DRAIN OUTLET

1.50' 1.50

1.00'

0.50'

POSSIBLE HGL

REGRADE STREAM CHANNEL TO MATCH RIPRAP OUTLET

ENERGY DISSIPATORS, TYP.

INV=457.75'

2.50'

INVERT ENERGY DISSIPATOR BASIN, SLOPE @ (-)2.50%

APPROX. EXIST. STREAM INVERT

INVERT GROUTED RIPRAP TRANSITION SLOPE @ (-)3.88±%

APPROX. EXIST. STREAM INVERT

APPROX. EXIST. GRADE

STRUCTURAL FILL & CLEAN GRANULAR BACKFILL GRAVEL CONFORMING TO ASTM D448 NO.5 SIZE

BOTTOM OF OVER-EXCAVATION & NEW BACKFILL @ ELEV. 450'

1'-6" MIN.

STA. 1+35.00

STA. 1+50.00

STA. 1+20.00

STA. 1+45.00

KEY, CUTOFF WALL, 1.00' MIN. INTO FIRM MATERIAL, TYP.

STA. 0+93.00
END RECONSTRUCT R.C. BOX CULVERT & BEGIN ENERGY DISSIPATOR BASIN

457.41

STA. 1+65.00
END ENERGY DISSIPATOR BASIN & BEGIN GROUTED RIPRAP TRANSITION

455.61

STA. 1+81.00
END GROUTED RIPRAP TRANSITION & OVER-EXCAVATION

454.6±
MATCH EXIST. GRADE

R.C. SHAFT, TYP.

STA. 1+08.00
END R.C. SHAFT

MIN. R.C. SHAFT TIP @ ELEV. 420'

480 470 460 450 440 430 420

0+90 1+00 1+10 1+20 1+30 1+40 1+50 1+60 1+70 1+80 1+90 2+00

PROFILE 2
SCALE: 1"=4'-0"

C-4

GRAPHIC SCALE:
1" = 4' 4' 0 4' 8'

PREFINAL

SCOTT A. KUNIOKA
LICENSED PROFESSIONAL ENGINEER
No. 7257-C
HAWAII U.S.A.

LICENSE EXPIRATION DATE: 4/30/12

THIS WORK WAS PREPARED BY ME OR UNDER MY SUPERVISION AND CONSTRUCTION OF THIS PROJECT WILL BE UNDER MY OBSERVATION.

SHIMABUKURO, ENDO & YOSHIZAKI, INC.
1126 12th Avenue
Honolulu, Hawaii 96816

COUNTY OF MAUI
DEPARTMENT OF PUBLIC WORKS
HAIKU, MAKAWAO, MAUI, HAWAII

HAIKU ROAD CULVERT REPLACEMENT
JOB NO. 08-11

PROFILE 2

Date: MARCH 2012
Design By: SAK
Drawn By: DAE

C-4

SHEET 9 OF 36 SHEETS

04/04/12 1:54:03 PM S:\SAK\HAIKU CULVERT\DRAW\08 & 09 - PROFILES.DWG

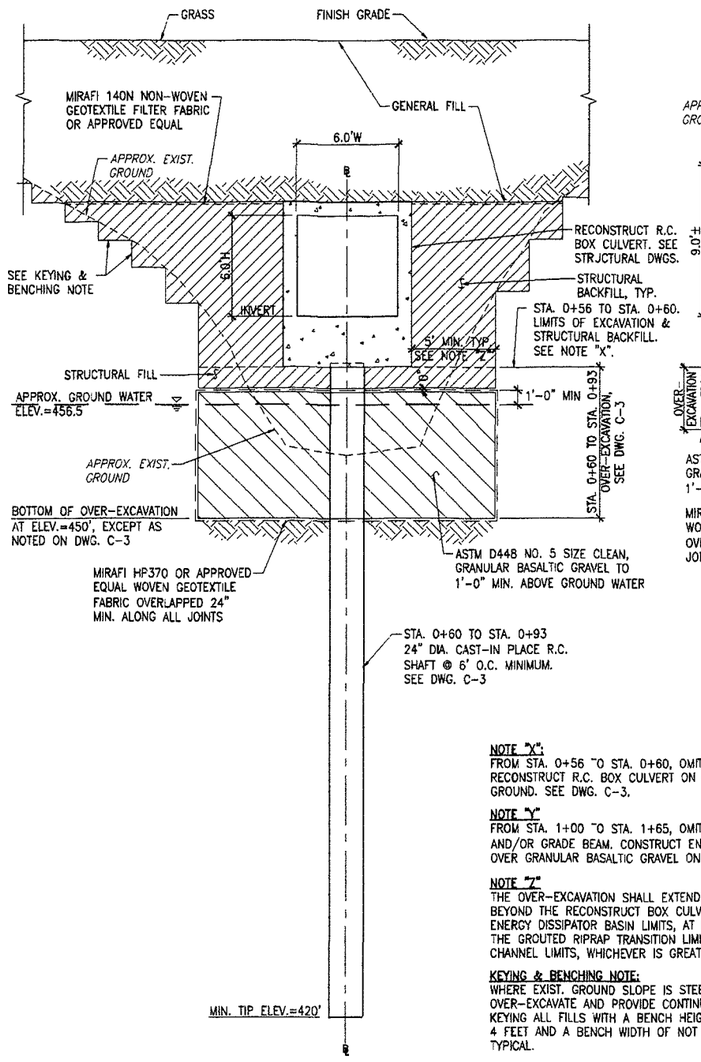

NOTE "X":
FROM STA. 0+56 TO STA. 0+60, OMIT OVER- EXCAVATION. RECONSTRUCT R.C. BOX CULVERT ON COMPACTED EXISTING GROUND. SEE DWG. C-3.

NOTE "Y"
FROM STA. 1+00 TO STA. 1+65, OMIT R.C. SHAFT, CAP, AND/OR GRADE BEAM. CONSTRUCT ENERGY DISSIPATOR BASIN OVER GRANULAR BASALTIC GRAVEL ON STRUCTURAL FILL.

NOTE "Z"
THE OVER-EXCAVATION SHALL EXTEND AT LEAST 5 FEET BEYOND THE RECONSTRUCT BOX CULVERT SECTION AND ENERGY DISSIPATOR BASIN LIMITS, AT LEAST 2 FEET BEYOND THE GROUTED RIPRAP TRANSITION LIMITS OR TO THE EXISTING CHANNEL LIMITS, WHICHEVER IS GREATER.

KEYING & BENCHING NOTE:
WHERE EXIST. GROUND SLOPE IS STEEPER THAN 5:1, OVER-EXCAVATE AND PROVIDE CONTINUOUS BENCHES FOR KEYING ALL FILLS WITH A BENCH HEIGHT OF NOT MORE THAN 4 FEET AND A BENCH WIDTH OF NOT MORE THAN 2 FEET, TYPICAL.

TYPICAL SECTION @ RECONSTRUCT R.C. BOX CULVERT (A / C-5)

SCALE: 1/4" = 1'-0" (STA. 0+56 TO STA. 0+93 AS NOTED)

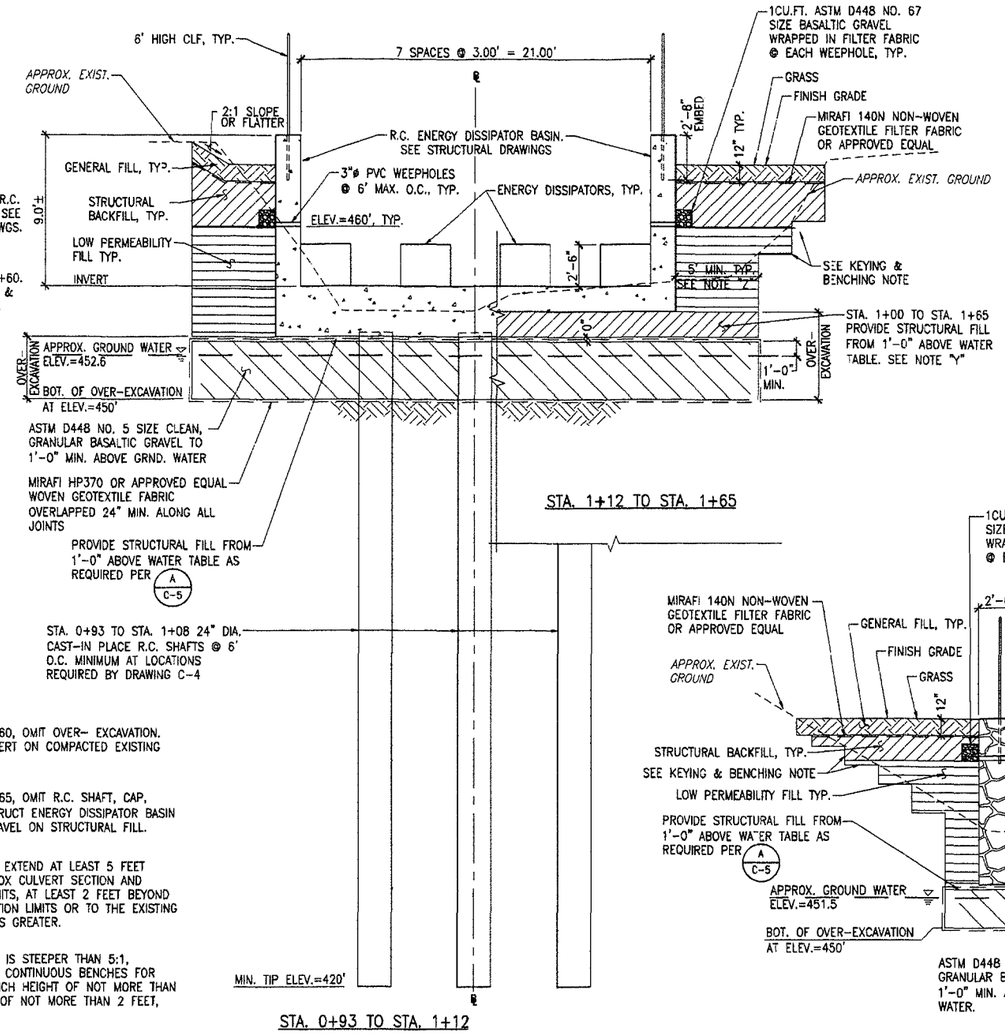

STA. 1+12 TO STA. 1+65

STA. 0+93 TO STA. 1+12

TYPICAL SECTION @ ENERGY DISSIPATOR BASIN (B / C-5)

SCALE: 1/4" = 1'-0" (STA. 0+93 TO STA. 1+65 AS NOTED)

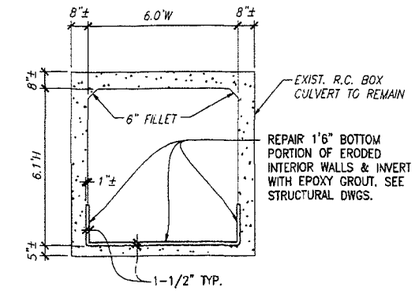

TYPICAL EXIST. 6.0'W x 6.1'H BOX CULVERT REPAIR (C / C-5)

SCALE: 3/8" = 1'-0" (STA. 0+00 TO STA. 0+56)

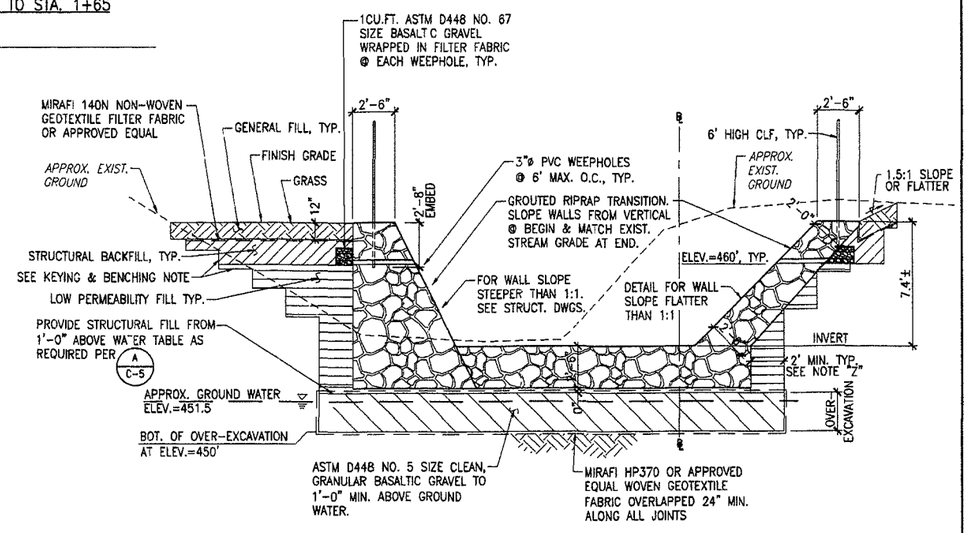

TYPICAL SECTION @ GROUTED RIPRAP TRANSITION (D / C-5)

SCALE: 1/4" = 1'-0" (STA. 1+65 TO STA. 1+91)

GRAPHIC SCALES:

1/4" = 1'-0" 2' 1' 0 2' 4' 6' 8'

3/8" = 1'-0" 1' 0 1' 2' 3' 4' 5' 6'

PREFINAL

SCOTT A. KUNIOKA LICENSED PROFESSIONAL ENGINEER No. 7257-C HAWAII U.S.A.

LICENSE EXPIRATION DATE: 4/30/12
THIS WORK WAS PREPARED BY ME OR UNDER MY SUPERVISION AND CONSTRUCTION OF THIS PROJECT WILL BE UNDER MY OBSERVATION

SHIMABUKURO, ENDO & YOSHIZAKI, INC.
1125 12th Avenue
Honolulu, Hawaii 96816

COUNTY OF MAUI
DEPARTMENT OF PUBLIC WORKS
HAIKU, MAKAWAO, MAUI, HAWAII

HAIKU ROAD CULVERT REPLACEMENT
JOB NO. 08-11

SITE SECTIONS

Date: MARCH 2012
Design By: SAK
Drawn By: CAE
C-5
SHEET 10 OF 38 SHEETS

04/04/12 1:54:09 PM S:\SAK\HAIKU CULVERT\DRAW\10 - SITE SECTIONS.DWG

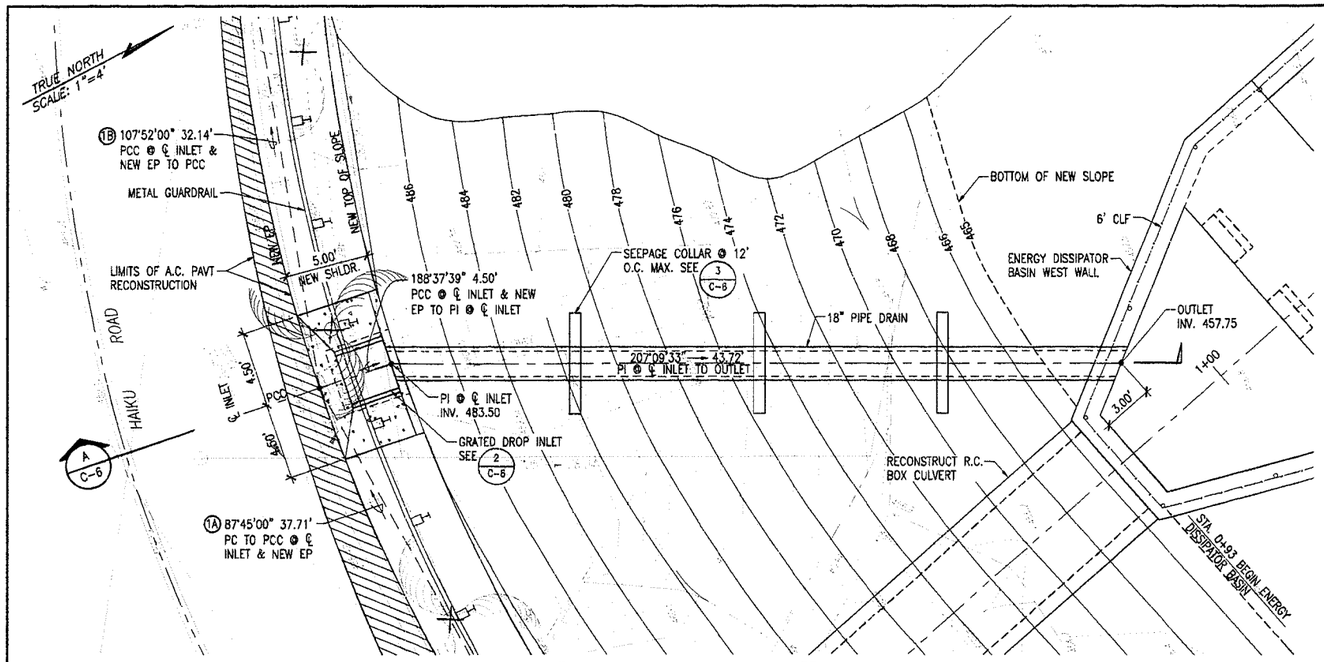

18" PIPE DRAIN PLAN (1/C-6)

1" = 4'

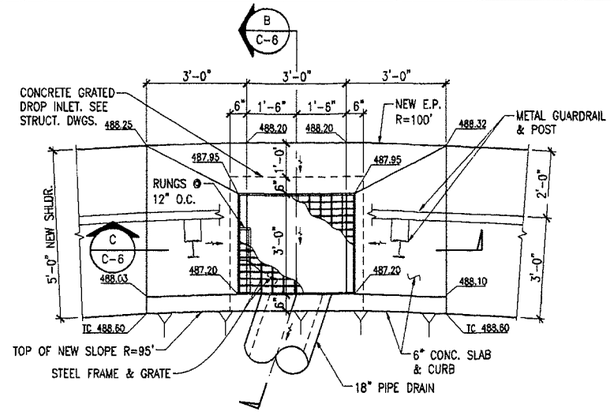

GRATED DROP INLET PLAN (2/C-6)

1/2" = 1'-0"

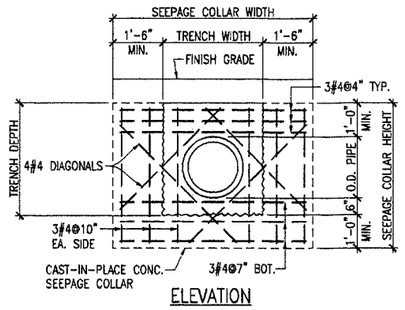

ELEVATION

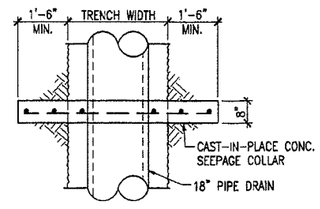

PLAN

SEEPAGE COLLAR DETAIL (3/C-6)

1/2" = 1'-0"

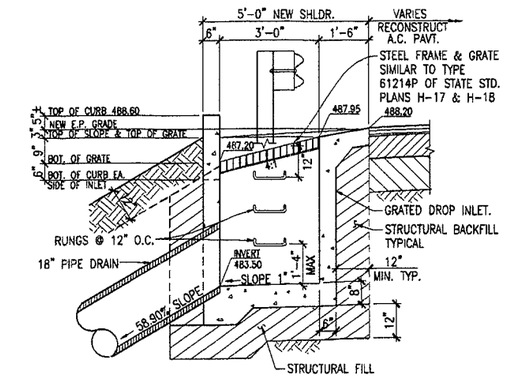

GRATED DROP INLET SECTION (B/C-6)

1/2" = 1'-0"

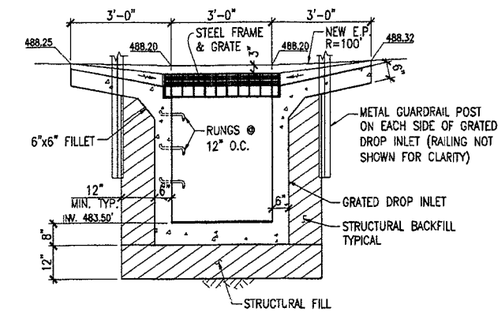

GRATED DROP INLET SECTION (C/C-6)

1/2" = 1'-0"

DRAIN PIPE NOTES:

1. PRIOR TO INSTALLING THE PIPE DRAIN, THE BOTTOM OF THE PIPE DRAIN TRENCH SHALL BE COMPACTED TO PROVIDE A FIRM BOTTOM AS INDICATED BY LITTLE TO NO YIELDING, PUMPING, OR RUTTING OF THE SUBGRADE UNDER REPEATED PASSES OF COMPACTION EQUIPMENT, BUT NOT LESS THAN SIX (6) PASSES. ANY YIELDING OR SOFT AREAS THAT DO NOT READILY COMPACT SHALL BE EXCAVATED TO FIRM SOILS AND REPLACED WITH GENERAL FILL MATERIAL.
2. SEEPAGE COLLARS SHALL BE INSTALLED ALONG THE DRAIN PIPE SPACED NOT MORE THAN 12 FEET ON CENTER TO REDUCE THE POTENTIAL FOE SEEPAGE TO FLOW ALONG THE PIPE.
3. BACKFILL TO 12" ABOVE THE PIPE WITH GRANULAR BACKFILL, AND OVER THE GRANULAR BACKFILL WITH GENERAL FILL MATERIAL PLACED AND COMPACTED AS SPECIFIED.

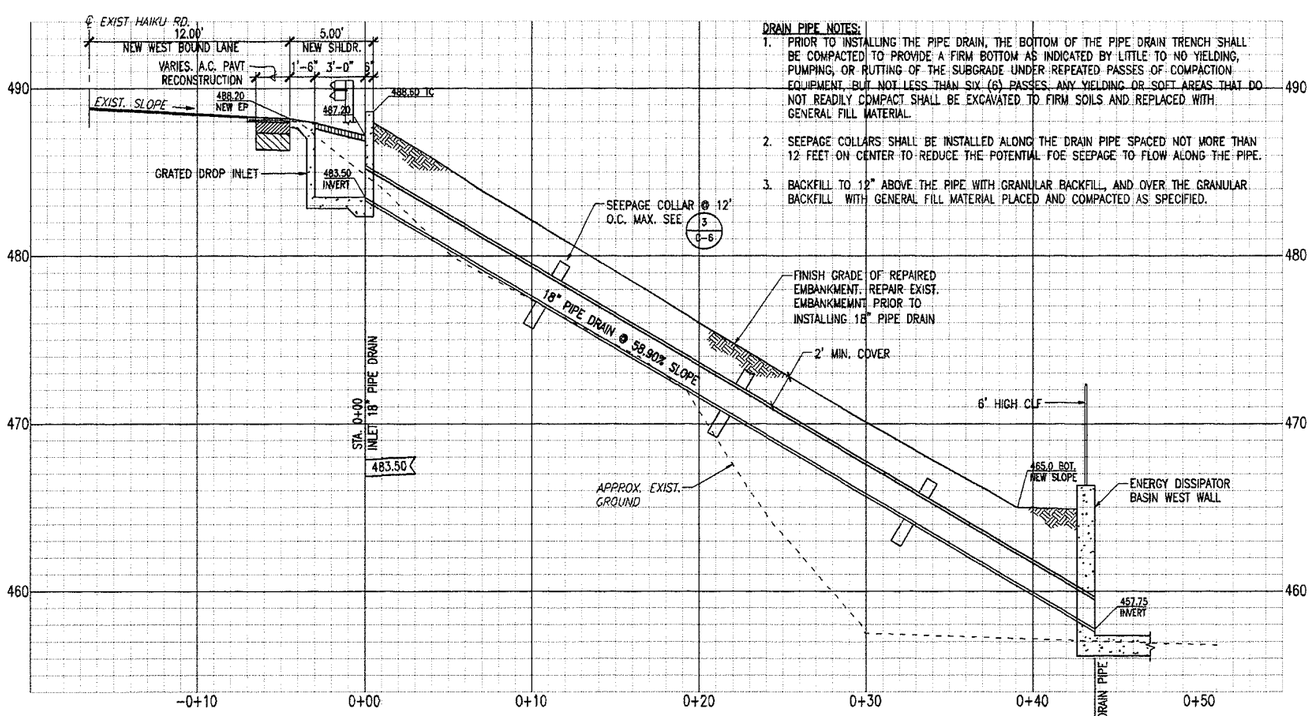

SECTION ALONG ℄ 18" PIPE DRAIN (A/C-6)

1" = 4'

GRAPHIC SCALES:

1" = 4' (1' 0 2' 4' 6' 8')

1/2" = 1'-0" (1' 0 1' 2' 3' 4')

PREFINAL

SCOTT A. KUNIOKA — LICENSED PROFESSIONAL ENGINEER No. 7257-C — HAWAII U.S.A.

LICENSE EXPIRATION DATE: 4/30/12

THIS WORK WAS PREPARED BY ME OR UNDER MY SUPERVISION AND CONSTRUCTION OF THIS PROJECT WILL BE UNDER MY OBSERVATION.

SHIMABUKURO, ENDO & YOSHIZAKI, INC.
1126 12th Avenue
Honolulu, Hawaii 96816

COUNTY OF MAUI
DEPARTMENT OF PUBLIC WORKS
HAIKU, MAKAWAO, MAUI, HAWAII

HAIKU ROAD CULVERT REPLACEMENT
JOB NO. 08-11

18" PIPE DRAIN PLAN, SECTIONS & DETAILS

Date: MARCH 2012
Design By: SAK
Drawn By: CAE

C-6

SHEET 11 OF 38 SHEETS

04/04/12 1:54:15 PM S:\SAK\HAIKU CULVERT\DRAW\11 - DRAIN PIPE PLAN.DWG

LEGEND

- LIMITS OF CLEARING AND/OR CONSTRUCTION
- TEMPORARY SILT FENCE
- DIRECTION OF RUNOFF FLOW
- TEMPORARY CONSTRUCTION SITE INGRESS/EGRESS
- TEMPORARY FILTER BERM

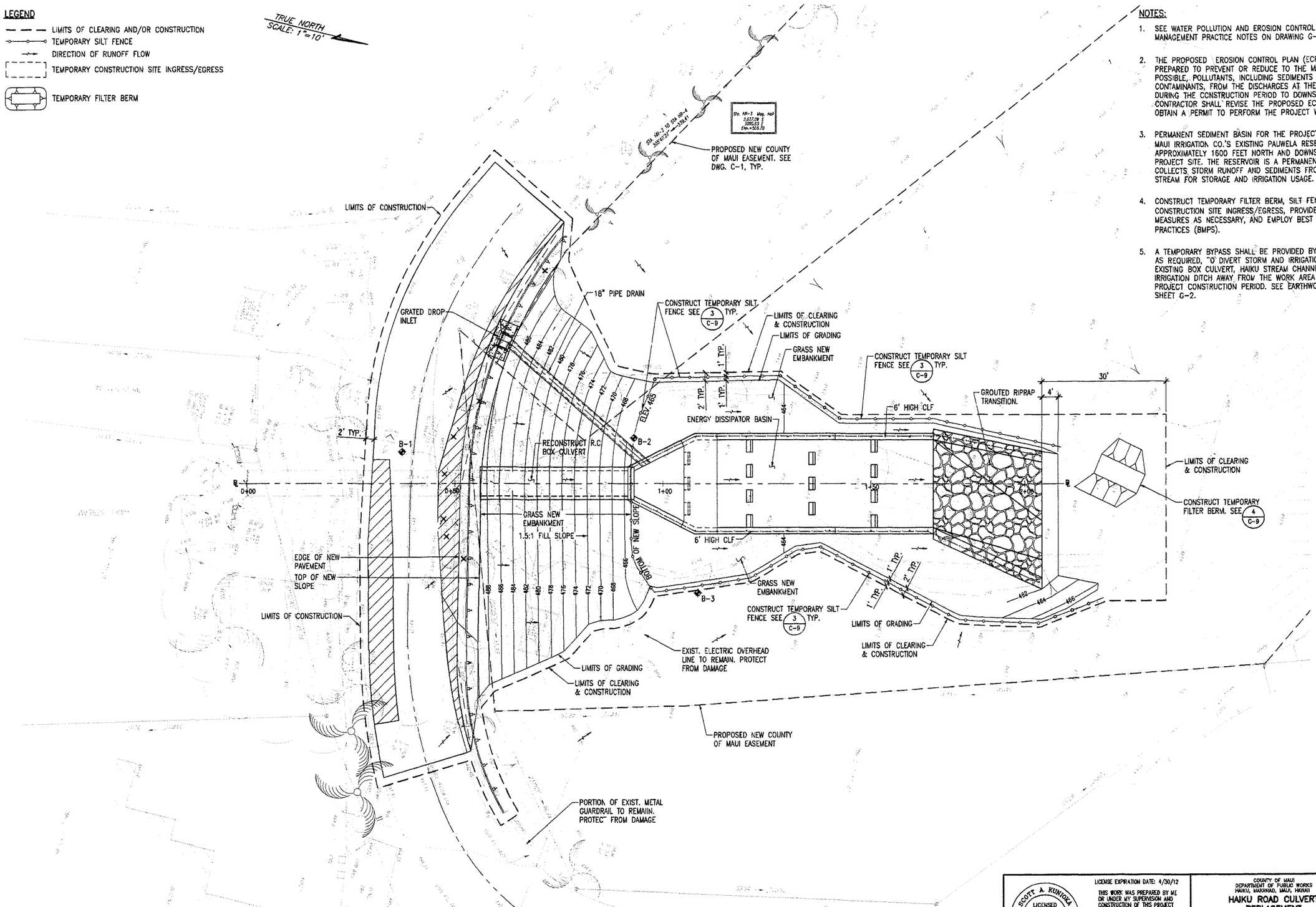

NOTES:

1. SEE WATER POLLUTION AND EROSION CONTROL NOTES, AND BEST MANAGEMENT PRACTICE NOTES ON DRAWING G-3.
2. THE PROPOSED EROSION CONTROL PLAN (ECP) HAS BEEN PREPARED TO PREVENT OR REDUCE TO THE MAXIMUM EXTENT POSSIBLE, POLLUTANTS, INCLUDING SEDIMENTS AND OTHER CONTAMINANTS, FROM THE DISCHARGES AT THE PROJECT SITE DURING THE CONSTRUCTION PERIOD TO DOWNSTREAM WATER BODIES. CONTRACTOR SHALL REVISE THE PROPOSED ECP AS NECESSARY TO OBTAIN A PERMIT TO PERFORM THE PROJECT WORK.
3. PERMANENT SEDIMENT BASIN FOR THE PROJECT WILL BE THE EAST MAUI IRRIGATION CO.'S EXISTING PAUWELA RESERVOIR LOCATED APPROXIMATELY 1600 FEET NORTH AND DOWNSTREAM OF THE PROJECT SITE. THE RESERVOIR IS A PERMANENT FACILITY WHICH COLLECTS STORM RUNOFF AND SEDIMENTS FROM THE UPPER HAIKU STREAM FOR STORAGE AND IRRIGATION USAGE.
4. CONSTRUCT TEMPORARY FILTER BERM, SILT FENCES, AND CONSTRUCTION SITE INGRESS/EGRESS, PROVIDE OTHER TEMPORARY MEASURES AS NECESSARY, AND EMPLOY BEST MANAGEMENT PRACTICES (BMPS).
5. A TEMPORARY BYPASS SHALL BE PROVIDED BY THE CONTRACTOR, AS REQUIRED, TO DIVERT STORM AND IRRIGATION WATER IN THE EXISTING BOX CULVERT, HAIKU STREAM CHANNEL, AND UPSTREAM IRRIGATION DITCH AWAY FROM THE WORK AREA DURING THE PROJECT CONSTRUCTION PERIOD. SEE EARTHWORK NOTE A7 ON SHEET G-2.

GRAPHIC SCALE:
1" = 10' 10' 0 10' 20'

PROPOSED EROSION CONTROL PLAN FOR BEST MANAGEMENT PRACTICES (1 / C-7)

1" = 10'-0"

PREFINAL

SCOTT A. KUNIOKA LICENSED PROFESSIONAL ENGINEER No. 7257-C HAWAII, U.S.A.

LICENSE EXPIRATION DATE: 4/30/12

THIS WORK WAS PREPARED BY ME OR UNDER MY SUPERVISION AND CONSTRUCTION OF THIS PROJECT WILL BE UNDER MY OBSERVATION.

SHIMABUKURO, ENDO & YOSHIZAKI, INC.
1126 12th Avenue
Honolulu, Hawaii 96816

COUNTY OF MAUI
DEPARTMENT OF PUBLIC WORKS
HAIKU, MAKAWAO, MAUI, HAWAII

HAIKU ROAD CULVERT REPLACEMENT
JOB NO. 08-11

BEST MANAGEMENT PRACTICES PLAN

Date: MARCH 2012
Design By: SAK
Drawn By: CAE

C-7

SHEET 12 OF 36 SHEETS

04/04/12 1:54:20 PM S:\SAK\HAIKU CULVERT\DRAW\12 - BEST MANAGMENT PRACTICES PLAN.DWG

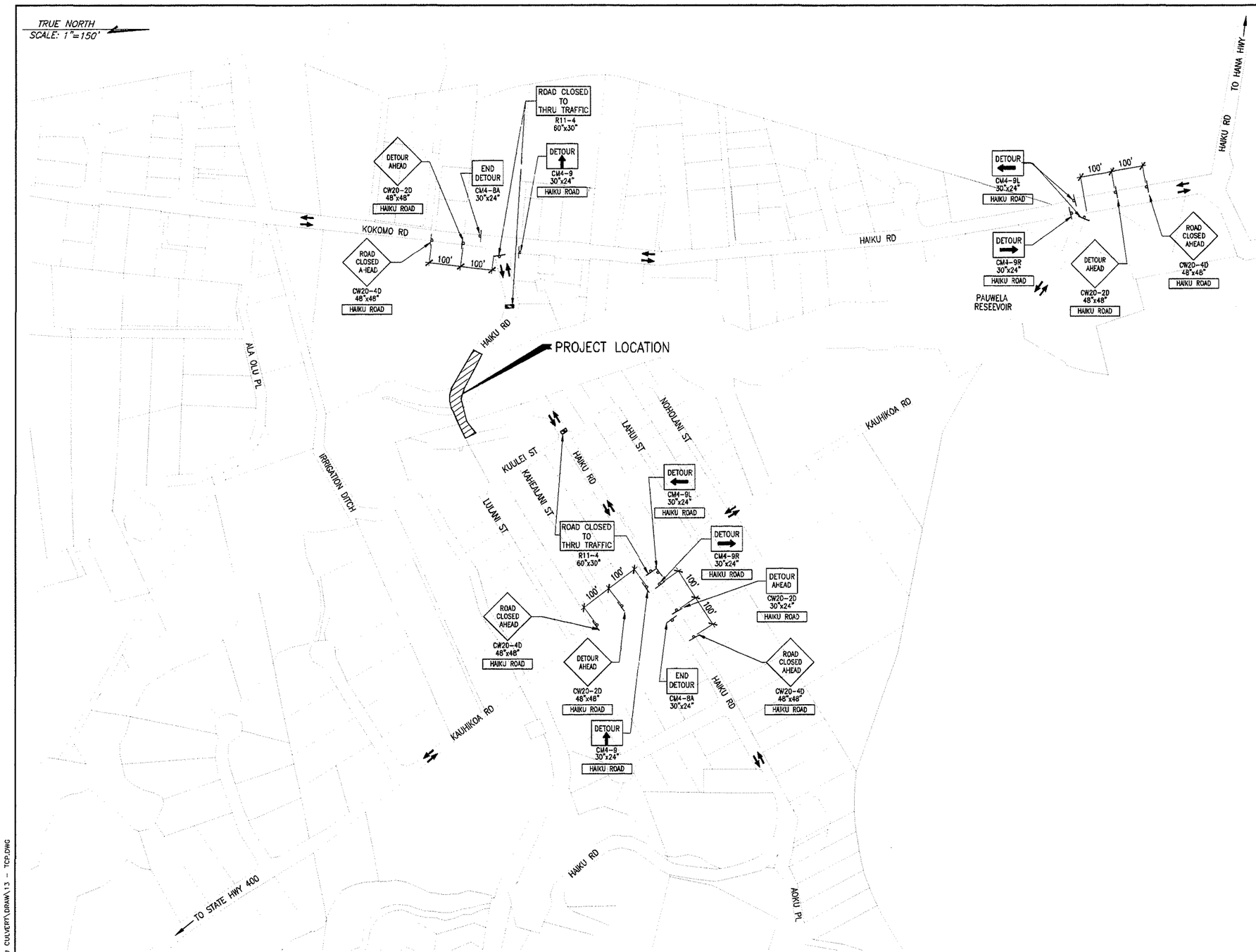

PROPOSED TRAFFIC CONTROL PLAN (TCP) FOR HAIKU ROAD CLOSURE (1 / C-8)

1" = 150'

GRAPHIC SCALE:

1" = 150' 100' 0 150' 300'

ROAD CLOSURE NOTES:

1. CONTRACTOR MAY CLOSE HAIKU ROAD AT THE PROJECT SITE TO THRU TRAFFIC FOR THREE MONTHS DURING CONSTRUCTION OF TEMPORARY CONSTRUCTION SITE INGREES/EGREES ROAD, REPAIR OF EXISTING EMBANKMENT, RECONSTRUCTION OF EXISTING BOX CULVERT, AND CONSTRUCTION OF NEW 18" PIPE DRAIN SYSTEM. CONTRACTOR MAY ALSO CLOSE HAIKU ROAD AT THE PROJECT SITE TO THRU TRAFFIC FOR ONE MONTH DURING THE RECONSTRUCTION OF EXISTING A.C. PAVEMENT SECTIONS, REPAVING OF EXISTING A.C. PAVEMENT, AND CONSTRUCTION OF NEW GUARDRAIL. HAIKU ROAD SHALL REMAIN OPEN TO THRU TRAFFIC DURING CONSTRUCTION OF THE ENERGY DISSIPATER BASIN AND GROUTED RIPRAP TRANSITION. DATES OF ROAD CLOSURE SHALL BE APPROVED BY THE ENGINEER.
2. TRAFFIC CONTROL PLAN (TCP) FOR HAIKU ROAD CLOSURE SHALL GENERALLY COMPLY WITH THE TCP PROPOSED ON THIS DRAWING. THE TCP WAS PREPARED ON THE BASIS OF POSTED SPEED ON ALL ROADS OF 25 MPH. CONTRACTOR SHALL REVISE THE PROPOSED TCP AS NECESSARY TO OBTAIN A PERMIT TO PERFORM THE PROJECT WORK.
3. SEE GENERAL NOTES FOR TRAFFIC CONTROL PLAN BELOW.
4. SIGN SPACING AND BUFFER LENGTHS SHALL BE IN ACCORDANCE TO EITHER HAWAII STANDARD SPECIFICATION SECTION 645 OR THE MANUAL ON UNIFORM TRAFFIC CONTROL DEVICES (MUTCD), 2005 EDITION AND ITS AMENDMENTS. THE CONTRACTOR SHALL APPLY THE STRICTER OF THE TWO.
5. AT LEAST TWO (2) WEEKS PRIOR TO CLOSURE OF HAIKU ROAD TO THRU TRAFFIC, ALL AFFECTED RESIDENTS, BUSINESSES, AND THE PUBLIC SHALL BE NOTIFIED BY THE CONTRACTOR AND KEPT APPRISED OF THE NATURE OF WORK, CONSTRUCTION SCHEDULE, ROAD CLOSURE, DETOURS, EXPECTED LENGTH OF TIME OF INCONVENIENCES, ANY RESTRICTIONS WHICH MAY BE IMPOSED TO COMPLETE THE WORK, AND THE CONTRACTORS PHONE NUMBER TO BE CALLED TO REPORT TRAFFIC CONCERNS.

GENERAL NOTES FOR TRAFFIC CONTROL PLAN:

1. THE PERMITTEE SHALL MAKE MINOR ADJUSTMENTS AT INTERSECTIONS, DRIVEWAYS, BRIDGES, STRUCTURES, ETC., TO FIT FIELD CONDITIONS.
2. WHEN REQUIRED CONES OR DELINEATORS SHALL BE EXTENDED TO A POINT WHERE THEY ARE VISIBLE TO APPROACHING TRAFFIC.
3. TRAFFIC CONTROL DEVICES SHALL BE INSTALLED SUCH THAT THE SIGN OR DEVICE FARTHEST FROM THE WORK AREA SHALL BE PLACED FIRST. THE OTHERS SHALL THEN BE PLACED PROGRESSIVELY TOWARD THE WORK AREA.
4. REGULATORY AND WARNING SIGNS WITHIN THE CONSTRUCTION ZONE THAT ARE IN CONFLICT WITH THE TRAFFIC CONTROL PLANS SHALL BE REMOVED OR COVERED. ALL SIGNS SHALL BE RESTORED UPON COMPLETION OF THE WORK.
5. WHEN REQUIRED FLAGGERS AND/OR POLICE OFFICERS SHALL BE IN SIGHT OF EACH OTHER OR IN DIRECT COMMUNICATION AT ALL TIMES.
6. WHEN REQUIRED BY THE ISSUING OFFICE, THE PERMITTEE SHALL INSTALL A FLASHING ARROW SIGNAL AS SHOWN ON THE TRAFFIC CONTROL PLANS.
7. REFER TO TABLE 645-1 ON PAGE 645-7 OF THE 2005 HAWAII STANDARD SPECIFICATIONS FOR ROAD AND BRIDGE CONSTRUCTION FOR SPACING OF SIGNS, CONES, AND TAPER LENGTHS IN REFERENCE TO THE TRAFFIC CONTROL.
8. ALL TRAFFIC LANES SHALL BE A MINIMUM OF 10 FEET WIDE.
9. ALL CONSTRUCTION WARNING SIGNS SHALL BE PROMPTLY REMOVED OR COVERED WHENEVER THE MESSAGE IS NOT APPLICABLE OR NOT IN USE.
10. THE BACKS OF ALL SIGNS USED FOR TRAFFIC CONTROL SHALL BE APPROPRIATELY COVERED TO PRECLUDE THE DISPLAY OF INAPPLICABLE SIGN MESSAGES (I.E., WHEN SIGNS HAVE MESSAGES ON BOTH FACES).
11. AT THE END OF EACH DAY'S WORK OR AS SOON AS THE WORK IS COMPLETED, THE PERMITTEE SHALL REMOVE ALL TRAFFIC CONTROL DEVICES NO LONER NEEDED TO PERMIT FREE AND SAFE PASSAGE OF PUBLIC TRAFFIC. REMOVAL SHALL BE IN THE REVERSE ORDER OF INSTALLATION.
12. REPLACE PERMANENT PAVEMENT MARKINGS AND TRAFFIC SIGNS UPON COMPLETION OF EACH PHASE OF WORK.
13. DRIVEWAYS SHALL BE KEPT OPEN UNLESS THE OWNERS OF THE PROPERTY USING THE RIGHT-OF-WAY ARE OTHERWISE PROVIDED FOR SATISFACTORILY. FURTHER, THE PERMITTEE SHALL CONTROL TRAFFIC GOING IN AND OUT OF DRIVEWAYS.

LEGEND:

- WORK AREA
- TEMPORARY TRAFFIC CONTROL SIGN W/ STAND
- DIRECTION OF TRAFFIC
- TYPE III BARRICADE

PREFINAL

SCOTT A. KUNIOKA LICENSED PROFESSIONAL ENGINEER No. 7257-C HAWAII U.S.A.

LICENSE EXPIRATION DATE: 4/30/12

THIS WORK WAS PREPARED BY ME OR UNDER MY SUPERVISION AND CONSTRUCTION OF THIS PROJECT WILL BE UNDER MY OBSERVATION

SHIMABUKURO, ENDO & YOSHIZAKI, INC.
1126 12th Avenue
Honolulu, Hawaii 96816

COUNTY OF MAUI
DEPARTMENT OF PUBLIC WORKS
HAIKU, MAKAWAO, MAUI, HAWAII

HAIKU ROAD CULVERT REPLACEMENT
JOB NO. 08-11

HAIKU ROAD CLOSURE PLAN

Date: MARCH 2012
Design By: SAK
Drawn By: CAE

C-8

SHEET 13 OF 38 SHEETS

04/04/12 1:54:24 PM S:\SAK\HAIKU CULVERT\DRAW\13 - TCP.DWG

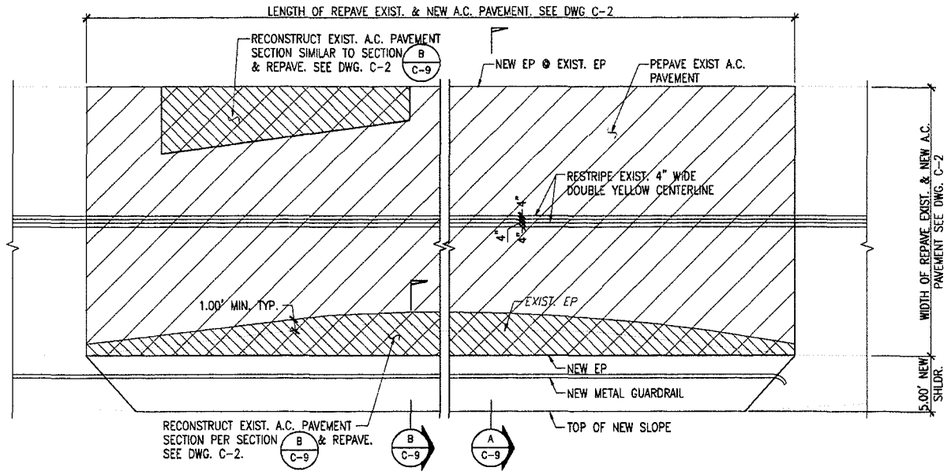

TYPICAL REPAVE EXIST & NEW A.C. PAVEMENT PLAN (1 / C-9)

NOT TO SCALE

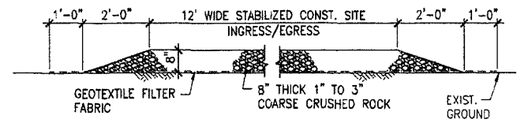

TEMPORARY CONSTRUCTION SITE INGESS/EGRESS DETAIL (2 / C-9)

SCALE: 1/2" = 1'-0"

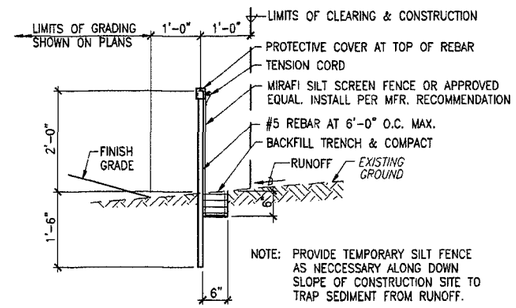

TEMP. SILT FENCE DETAIL (3 / C-9)

SCALE: 3/4" =1'-0"

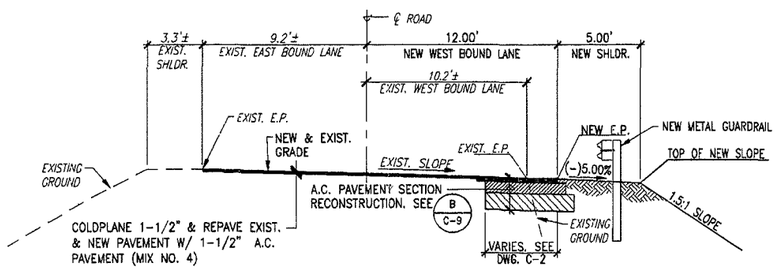

TYPICAL REPAVE SECTION (A / C-9)

SCALE: 1/4" = 1'-0"

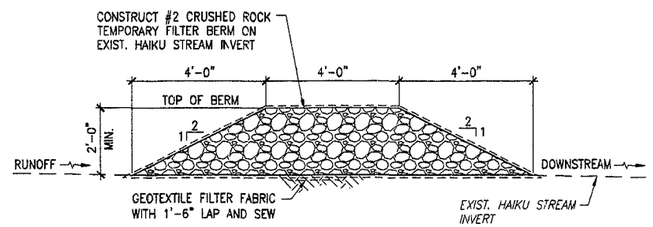

TEMPORARY FILTER BERM DETAIL (4 / C-9)

SCALE: 1/2" = 1'-0"

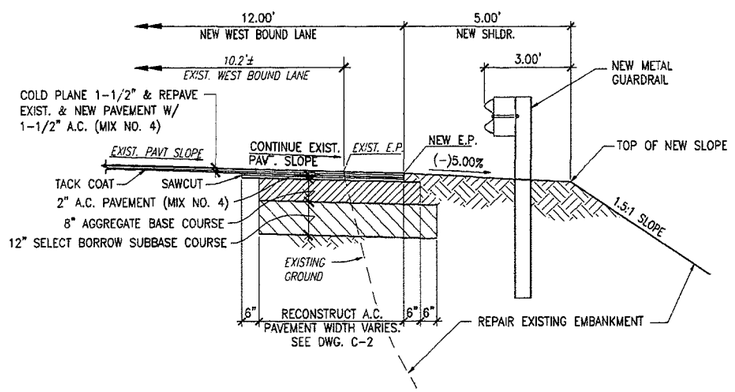

TYPICAL RECONSTRUCT A.C. PAVEMENT SECTION (B / C-9)

SCALE: 1/2" = 1'-0"

NOTE:
TEMPORARY INLET PROTECTION CAN ALSO BE PROVIDED IN ACCORDANCE WITH SECTIONS 6.51 AND 6.52 OF THE COUNTY'S "STANDARD CONSTRUCTION BMPS"

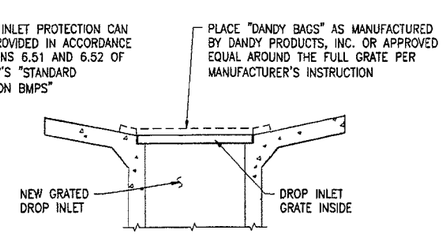

TEMPORARY GRATED DROP INLET PROTECTION DETAIL (5 / C-9)

NOT TO SCALE

PREFINAL

SCOTT A. KUNIOKA LICENSED PROFESSIONAL ENGINEER No. 7257-C HAWAII U.S.A.

LICENSE EXPIRATION DATE: 4/30/12

THIS WORK WAS PREPARED BY ME OR UNDER MY SUPERVISION AND CONSTRUCTION OF THIS PROJECT WILL BE UNDER MY OBSERVATION

SHIMABUKURO, ENDO & YOSHIZAKI, INC.
1126 12th Avenue
Honolulu, Hawaii 96816

COUNTY OF MAUI
DEPARTMENT OF PUBLIC WORKS
HAIKU, MAKAWAO, MAUI, HAWAII

HAIKU ROAD CULVERT REPLACEMENT
JOB NO. 08-11

MISCELLANEOUS DETAILS

Date: MARCH 2012
Design By: SAK
Drawn By: OAE

C-9

SHEET 14 OF 38 SHEETS

04/04/12 1:54:29 PM S:\SAK\HAIKU CULVERT\DRAW\14 - MISC DETAILS.DWG

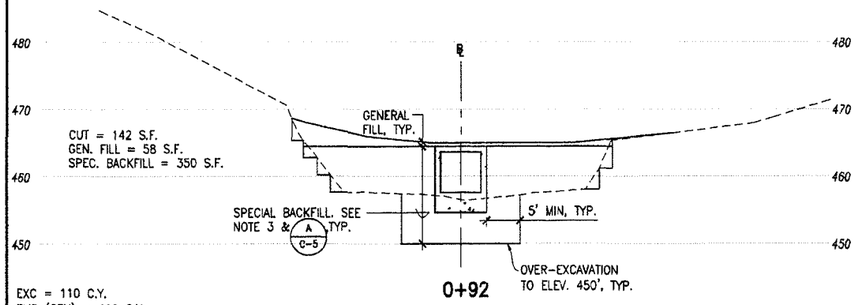

EXC = 110 C.Y.
EMB (GEN) = 199 C.Y.
EMB (SPEC) = 238 C.Y.

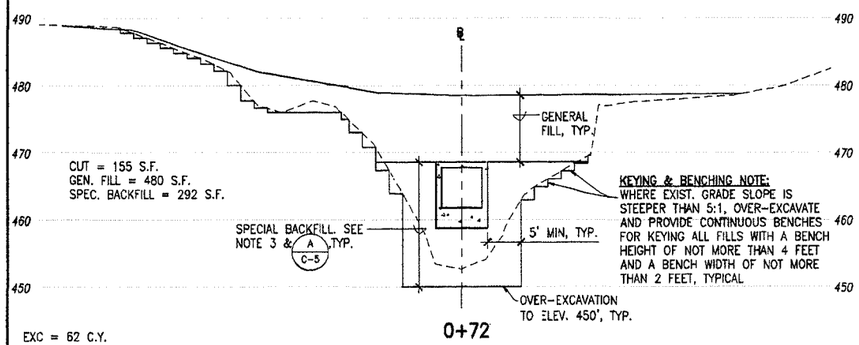

EXC = 62 C.Y.
EMB (GEN) = 224 C.Y.
EMB (SPEC) = 90 C.Y.

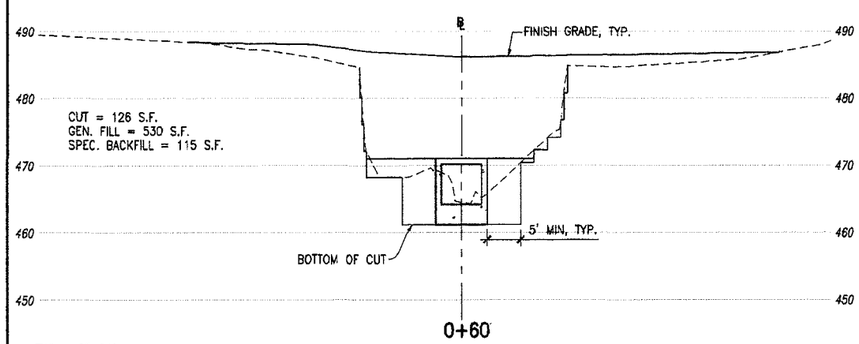

EXC = 27 C.Y.
EMB (GEN) = 75 C.Y.
EMB (SPEC) = 16 C.Y.

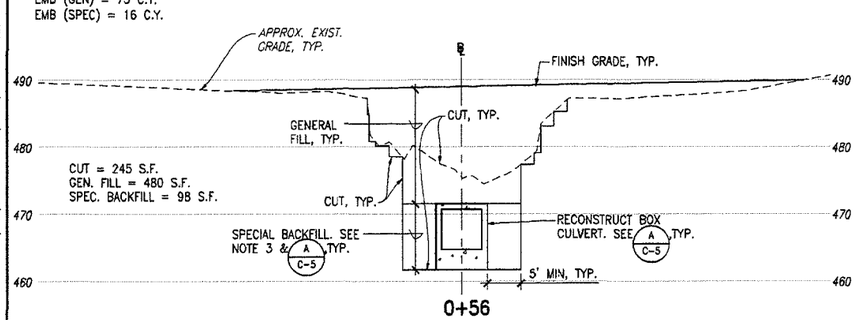

EXC = 0
EMB (GEN) = 62 C.Y.
EMB (SPEC) = 0

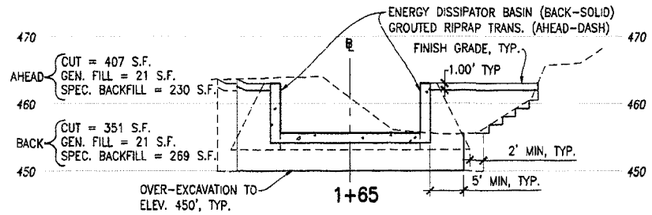

NOTE: BOTTOM OF CUTOFF WALL NOT SHOWN

EXC = 184 C.Y.
EMB (GEN) = 9 C.Y.
EMB (SPEC) = 144 C.Y.

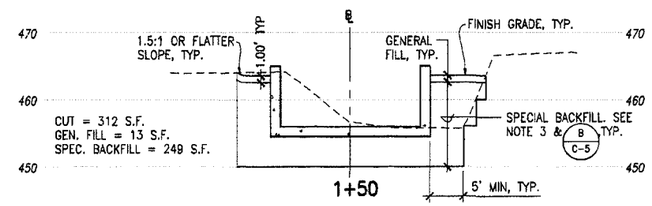

EXC = 169 C.Y.
EMB (GEN) = 8 C.Y.
EMB (SPEC) = 151 C.Y.

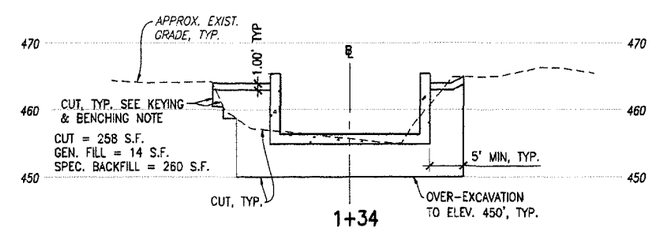

EXC = 196 C.Y.
EMB (GEN) = 14 C.Y.
EMB (SPEC) = 231 C.Y.

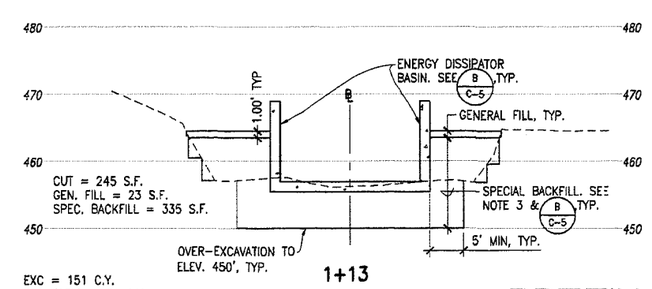

EXC = 151 C.Y.
EMB (GEN) = 32 C.Y.
EMB (SPEC) = 266 C.Y.

PREFINAL

EARTHWORK SUMMARY (FOR CULVERT REPLACEMENT)

ESTIMATED EXCAVATION = 1,226 C.Y.
ESTIMATED GENERAL FILL = 639 C.Y.
ESTIMATED SPECIAL BACK FILL = 1,289 C.Y.

NOTES:

1. EARTHWORK SUMMARY IS APPROXIMATE AND EXCLUDES EARTHWORK QUANTITIES FOR R.C. SHAFTS, PIPE DRAIN IMPROVEMENTS, TEMPORARY CONSTRUCTION SITE INGRESS / EGRESS ROAD, AND REPAIRING AND REPAVING HAIKU ROAD.
2. THE CONTRACTOR SHALL MAKE HIS OWN ESTIMATE FOR BIDDING PURPOSES.
3. SPECIAL BACKFILL CONSISTS OF GRANULAR BASALTIC GRAVEL, STRUCTURAL FILL AND BACKFILL, LOW PERMEABILITY FILL, AND DRAINAGE BASALTIC GRAVEL AS INDICATED ON DRAWING C-5 AND SPECIFIED ON DRAWING G-2.
4. GENERAL FILL SHALL CONSIST OF MATERIALS AS SPECIFIED ON DRAWING G-2.

EXC = 2.C.Y.
EMB (GEN) = 0
EMB (SPEC) = 0
COMPARATIVE

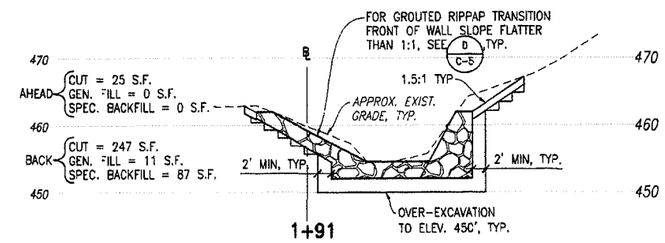

NOTE: BOTTOM OF CUTOFF WALL NOT SHOWN

EXC = 143 C.Y.
EMB (GEN) = 6 C.Y.
EMB (SPEC) = 59 C.Y.

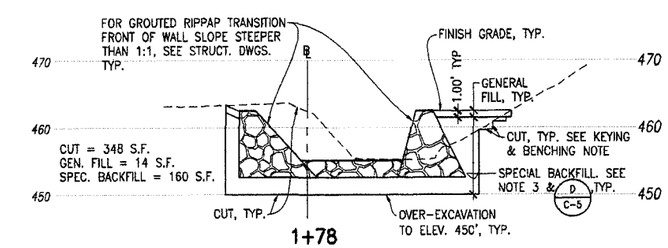

EXC = 182 C.Y.
EMB (GEN) = 8 C.Y.
EMB (SPEC) = 94 C.Y.

GRAPHIC SCALE:
1" = 10'
10' 0 10' 20'

SCOTT A. KUNIOKA
LICENSED PROFESSIONAL ENGINEER
No. 7257-C
HAWAII, U.S.A.

LICENSE EXPIRATION DATE: 4/30/12
THIS WORK WAS PREPARED BY ME OR UNDER MY SUPERVISION AND CONSTRUCTION OF THIS PROJECT WILL BE UNDER MY OBSERVATION.

SHIMABUKURO, ENDO & YOSHIZAKI, INC.
1126 12th Avenue
Honolulu, Hawaii 96816

COUNTY OF MAUI
DEPARTMENT OF PUBLIC WORKS
HAIKU, MAKAWAO, MAUI, HAWAII

HAIKU ROAD CULVERT REPLACEMENT
JOB NO. 08-11

CROSS SECTIONS

Date: MARCH 2012
Design By: SAK
Drawn By: CAE

C-10

SHEET 15 OF 38 SHEETS

04/04/12 1:54:34 PM S:\SAK\HAIKU CULVERT\DRAW\15 CROSS SECTIONS.DWG

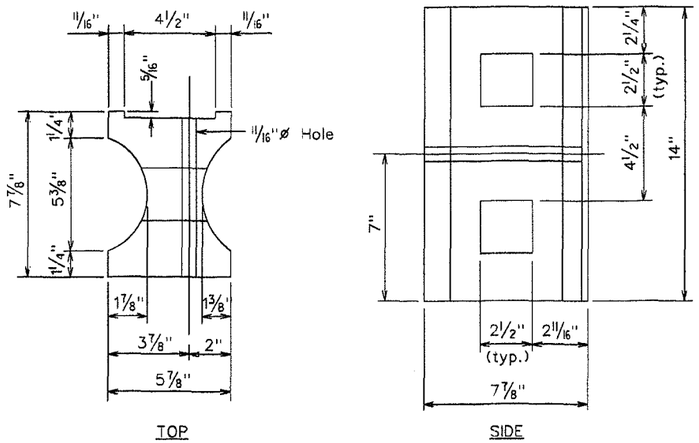

RECYCLED PLASTIC BLOCKOUT (TYPE I)

NOT TO SCALE

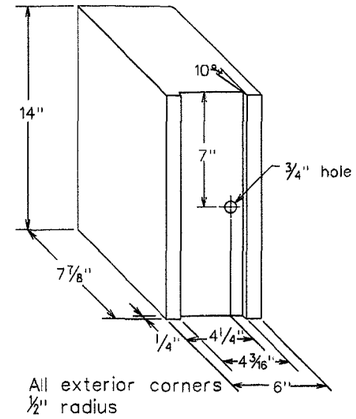

RECYCLED POLYETHYLENE OFFSET BLOCK (TYPE II)

NOT TO SCALE

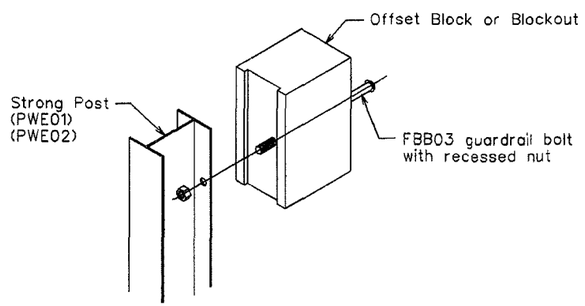

Exploded View
(Rail and washer not shown)

STEEL POST AND BLOCK DETAIL

NOT TO SCALE

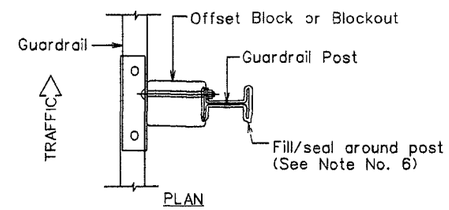

PLAN

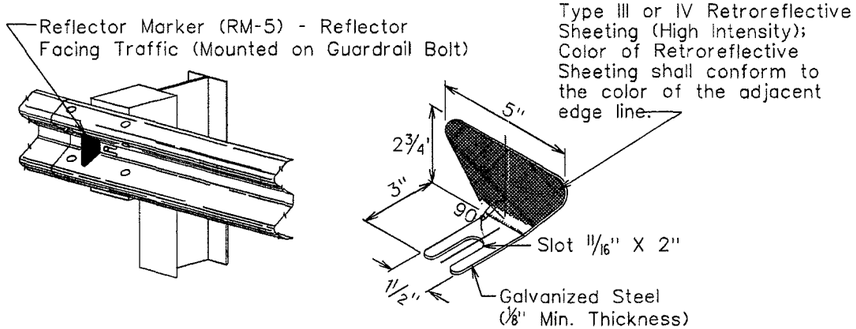

REFLECTOR MARKER (RM-5) DETAIL AND TYPICAL INSTALLATION

NOT TO SCALE

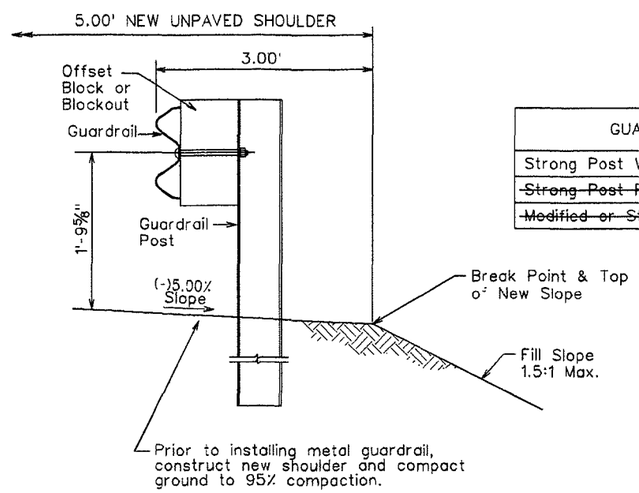

ELEVATION

TYPICAL GUARDRAIL INSTALLATION (MODIFIED)

NOT TO SCALE

GUARDRAIL TYPE	DIMENSION	
	H	A
Strong Post W-Beam	1'-9 5/8"	1'-6"
~~Strong Post Rubrail (W Beam)~~	~~2'-0"~~	~~1'-6"~~
~~Modified or Strong Post Thrie Beam~~	~~2'-0"~~	~~2'-0"~~

GENERAL NOTES

1. All hardware, posts and fasteners shall be hot-dip zinc coated galvanized after fabrication. No punching, drilling or cutting will be permitted after galvanizing.
2. Where conditions require, special post lengths in increments of 6 inches may be specified.
3. All fasteners, posts, and rail elements (i.e. FBB03, PWE01, RWM02b, etc.) shall conform to the latest edition and amendments of "A Guide to Standardized Highway Barrier Rail Hardware", a report prepared and approved by the AASHTO-AGC-ARTBA Joint Cooperative Committee, Subcommittee On New Highway Materials, Task Force 13 Report. Dimensions of fastners, posts and rail elements have been converted from metric units into their present form.
4. The Recycled Plastic Block or Offset Block shall be approved by the City.
5. After the guardrail posts are installed ~~in the paved area~~, the Contractor shall fill/seal around each guardrail post and all cracks ~~in the paved area~~ caused during the guardrail post installation. If required by the inspector/engineer, the Contractor shall tamper the ~~paved~~ area around the guardrail post prior to filling/sealing. All costs associated with this work shall not be paid for separately, but shall be considered incidental to the various guardrail items.
6. When standards for the fill slope area cannot be met, a site specific, engineer approved design may be used.
7. Reflector Markers (RM-5) mounted on guardrails shall be spaced every 25 feet. RM-5's shall not be installed on Terminal Sections. Furnishing and installing of each RM-5 shall be considered incidental to the adjacent guardrail system.
8. Guardrails shall be furnished and installed per section 606 of the hawaii standard specifications for road and bridge construction 2005, as ammended.

NOTE: THIS DRAWING IS TAKEN AND MODIFIED FROM STATE OF HAWAII DEPARTMENT OF TRANSPORTATION HIGHWAYS DIVISION STANDARD DRAWING B-1.

PREFINAL

SCOTT A. KUNIOKA
LICENSED PROFESSIONAL ENGINEER
No. 7257-C
HAWAII, U.S.A.

LICENSE EXPIRATION DATE: 4/30/12

THIS WORK WAS PREPARED BY ME OR UNDER MY SUPERVISION AND CONSTRUCTION OF THIS PROJECT WILL BE UNDER MY OBSERVATION.

SHIMABUKURO, ENDO & YOSHIZAKI, INC.
1126 12th Avenue
Honolulu, Hawaii 96816

COUNTY OF MAUI
DEPARTMENT OF PUBLIC WORKS
HAIKU, MAKAWAO, MAUI, HAWAII

HAIKU ROAD CULVERT REPLACEMENT
JOB NO. 08-11

GUARDRAIL DETAILS AND NOTES

Date: MARCH 2012
Design By: SAK
Drawn By: CAE

C-11

SHEET 16 OF 36 SHEETS

04/04/12 1:54:39 PM S:\SAK\HAIKU CULVERT\DRAW\16 - DOT SHEET B-1.DWG

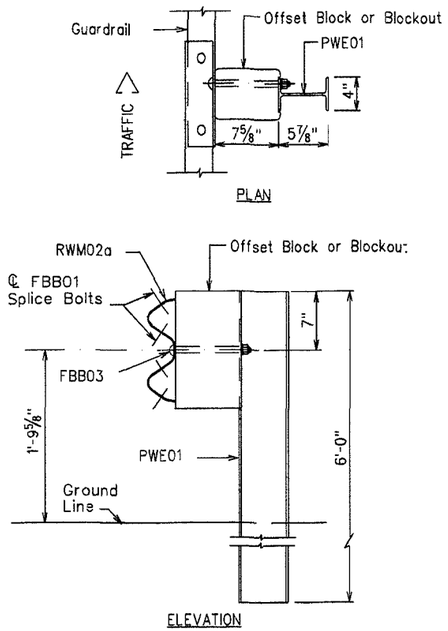

STRONG POST W-BEAM GUARDRAIL (SGR04a)

NOT TO SCALE

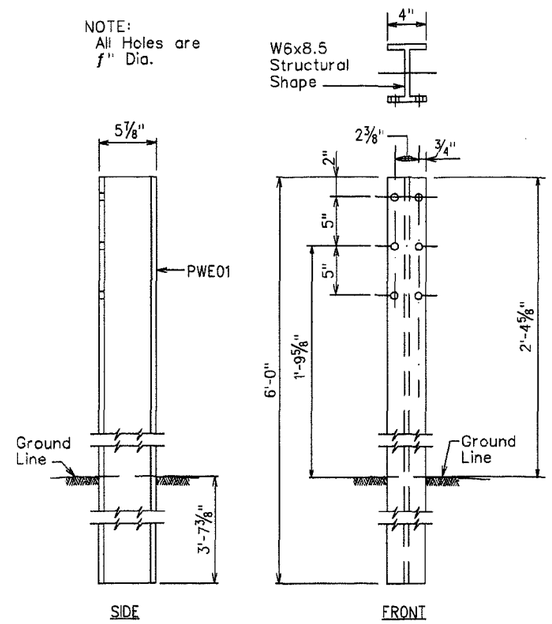

W-BEAM STRONG POST (PWE01)

NOT TO SCALE

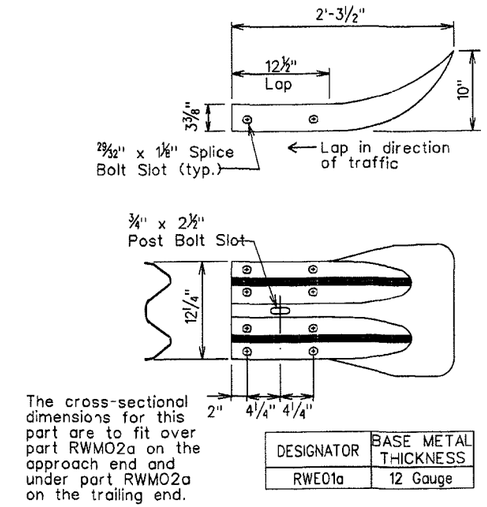

DESIGNATOR	BASE METAL THICKNESS
RWE01a	12 Gauge

W-BEAM END SECTION (FLARED RWE01a)

NOT TO SCALE

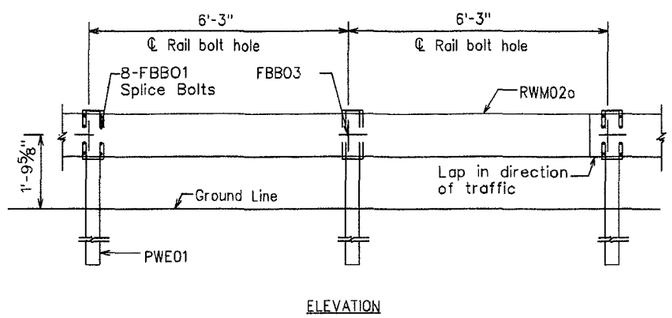

STRONG POST W-BEAM GUARDRAIL WITH RECYCLED OFFSET BLOCK OR PLASTIC BLOCKOUT

NOT TO SCALE

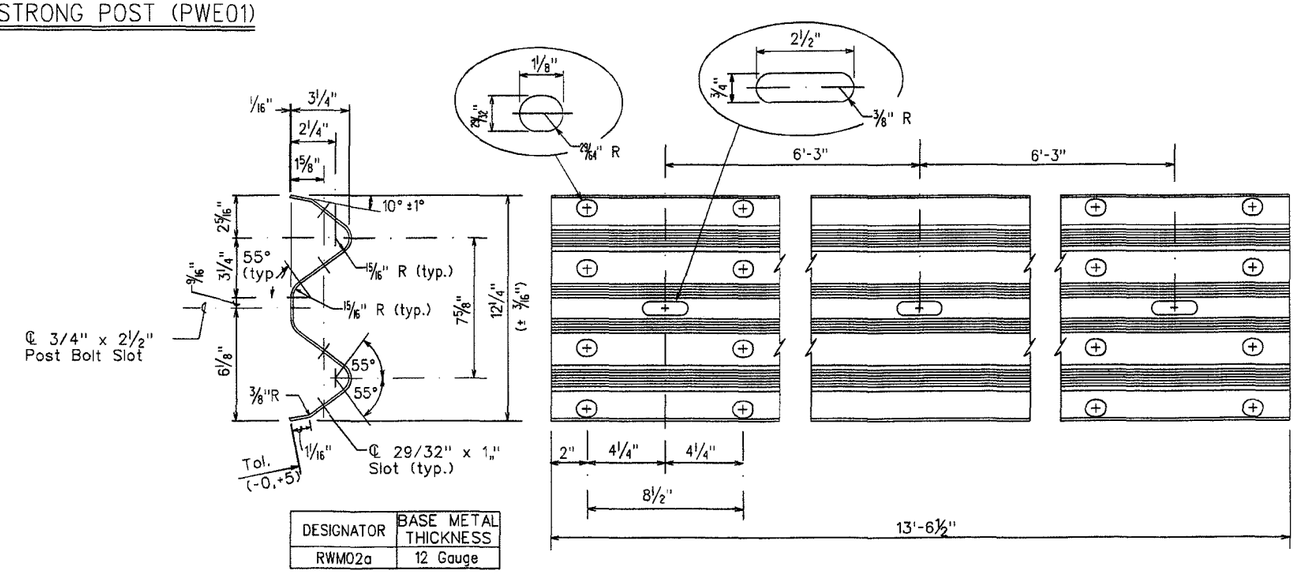

DESIGNATOR	BASE METAL THICKNESS
RWM02a	12 Gauge

2 SPACE W-BEAM GUARDRAIL (RWM02a)

NOT TO SCALE

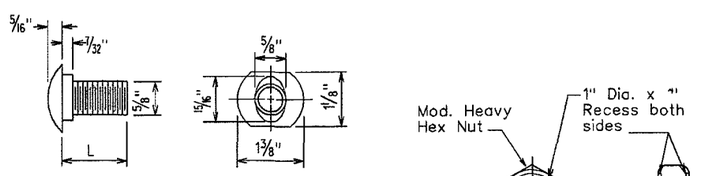

DESIGNATOR	L
FBB01	1⅜"
FBB02	2"
FBB03	10"

GUARDRAIL BOLTS AND RECESSED NUT

NOT TO SCALE

NOTE: THIS DRAWING IS TAKEN FROM STATE OF HAWAII DEPARTMENT OF TRANSPORTATION HIGHWAYS DIVISION STANDARD DRAWINGS B-2 & B-3.

PREFINAL

SCOTT A. KUNIOKA
LICENSED PROFESSIONAL ENGINEER
No. 7257-C
HAWAII, U.S.A.

LICENSE EXPIRATION DATE: 4/30/12

THIS WORK WAS PREPARED BY ME OR UNDER MY SUPERVISION AND CONSTRUCTION OF THIS PROJECT WILL BE UNDER MY OBSERVATION.

SHIMABUKURO, ENDO & YOSHIZAKI, INC.
1126 12th Avenue
Honolulu, Hawaii 96816

COUNTY OF MAUI
DEPARTMENT OF PUBLIC WORKS
HAIKU, MAKAWAO, MAUI, HAWAII

HAIKU ROAD CULVERT REPLACEMENT
JOB NO. 08-11

STRONG POST W-BEAM GUARDRAIL & FLARED RWE01a

Date: MARCH 2012
Design By: SAK
Drawn By: CAE

C-12

SHEET 17 OF 36 SHEETS

04/04/12 1:54:44 PM S:\SAK\HAIKU CULVERT\DRAW\17 - DOT SHEET B-2.DWG

STRUCTURAL GENERAL NOTES

1. GENERAL SPECIFICATIONS: STANDARD SPECIFICATIONS FOR ROAD AND AND BRIDGE CONSTRUCTION, 2005, TOGETHER WITH SPECIAL PROVISIONS PREPARED FOR THIS CONTRACT.

2. DESIGN SPECIFICATIONS:

   (A) AASHTO 2010 LRFD BRIDGE DESIGN SPECIFICATIONS, FIFTH EDITION AND ITS SUBSEQUENT INTERIM SPECIFICATIONS WITH INTERIM SUPPLEMENTS AND MODIFICATIONS BY THE DEPARTMENT OF TRANSPORTATION, HIGHWAYS DIVISION, STATE OF HAWAII.

   (B) HAWAII DEPARTMENT OF TRANSPORTATION "DESIGN CRITERIA FOR BRIDGES AND STRUCTURES" DATED OCTOBER 20, 2010.

3. LOADS:

   (A) SEISMIC LOADS: ACCELERATION COEFFICIENT 0.28
   SITE CLASS ..... D

4. MATERIALS:

   (A) ALL CONCRETE STRENGTHS SHALL BE AS NOTED BELOW:

ITEM NO.	STRUCTURAL PARTS	MAXIMUM WATER/CEMENT RATIO (W/C)	SPECIFIED COMPRESSIVE STRENGTH, F'C (28 DAYS)
(1)	BOX CULVERT	.45	5000 PSI
(2)	ENERGY DISSIPATOR SLAB AND WALLS	.45	5000 PSI
(3)	GRATED DROP INLET	.48	4000 PSI
(4)	DRILLED SHAFTS	.45	4500 PSI
(5)	EXCEPT AS NOTED OTHERWISE ALL OTHERS	.48	4000 PSI

   (B) SHRINKAGE REDUCING ADMIXTURE (SRA) SHALL BE ADDED TO THE CONCRETE MIX FOR ITEMS (1) AND (2) THE MINIMUM DOSAGE REQUIREMENT SHALL BE 128 OUNCES PER CUBIC YARD OF CONCRETE OR AS RECOMMENDED BY THE MANUFACTURER.

   (C) A MIGRATING CORROSION INHIBITOR AMINE CARBOXYLATE WATER-BASED ADMIXTURE SHALL BE ADDED TO THE CONCRETE MIX. FOR ITEMS (1), (2), (3), AND (4) THE MINIMUM DOSAGE SHALL BE 1.5 PINTS PER CUBIC YARD OF CONCRETE. THE ADMIXTURE SHALL NOT AFFECT THE SET TIME OF THE CONCRETE.

   (D) ALL STRUCTURAL STEEL PLATES AND SHAPES SHALL BE ASTM A36, HOT-DIP GALVANIZED AFTER FABRICATION, UNLESS OTHERWISE NOTED.

   (E) STEEL WIDE FLANGE, W-SHAPES, SHALL CONFORM TO ASTM A572-50.

   (F) ALL REINFORCING STEEL SHALL BE ASTM A615 GRADE 60 UNLESS OTHERWISE NOTED.

   (G) REINFORCING STEEL SHALL BE ASTM A706 WHERE WELDED CONNECTIONS ARE REQUIRED AND SHALL BE ASTM A775 FOR EPOXY-COATED REINFORCING STEEL.

   (H) GLASS FIBER REINFORCED POLYMER BAR:

      (1) GLASS FIBER REINFORCED POLYMER (GFRP) REBAR SHALL HAVE A MINIMUM TENSILE STRENGTH OF 110 KSI FOR #4 BAR AND SMALLER. ALL OTHERS SHALL HAVE A MINIMUM TENSILE STRENGTH OF 95 KSI. THE ALLOWABLE STRESS IS EQUAL TO 1/4 OF THE TENSILE STRENGTH.

      (2) THE MODULUS OF ELASTICITY OF THE GFRP BAR SHALL BE A MINIMUM OF 5,900,000 PSI.

      (3) MINIMUM CONCRETE COVER FOR THE GFRP BARS SHALL BE 3/4" UNLESS OTHERWISE NOTED.

      (4) MINIMUM LAP SPLICE LENGTHS FOR THE GFRP BARS SHALL BE 42 BAR DIAMETERS UNLESS OTHERWISE NOTED.

      (5) ALL GFRP BARS SHALL BE SECURELY TIED IN PLACE.

      (6) THE GFRP BARS MAY BE CUT IN THE FIELD WITH A MASONRY OR DIAMOND BLADE.

      (7) ALL WORK INCLUDING MATERIALS AND BENDS SHALL FOLLOW MANUFACTURER'S RECOMMENDATIONS.

5. REINFORCEMENT:

   (A) THE MINIMUM COVERING MEASURED FROM THE SURFACE OF THE CONCRETE TO THE FACE OF ANY REINFORCING BARS SHALL BE AS FOLLOWS, EXCEPT AS OTHERWISE SHOWN:

      (1) UNLESS OTHERWISE NOTED = 3"

   (B) REINFORCING BARS SHALL BE DETAILED IN ACCORDANCE WITH THE LATEST EDITION OF THE DESIGN SPECIFICATION IN NOTE 2 UNLESS OTHERWISE NOTED.

   (C) MINIMUM CLEAR SPACING BETWEEN PARALLEL BARS SHALL BE 1 1/2 TIMES THE DIAMETER OF BARS (FOR NON BUNDLED BARS). IN NO CASE SHALL THE CLEAR DISTANCE BETWEEN THE BARS BE LESS THAN 1 1/2 TIMES THE MAXIMUM SIZE OF THE COARSE AGGREGATE OR 1 1/2".

   (D) ALL DIMENSIONS RELATING TO REINFORCING BARS ARE TO CENTERS OF BARS UNLESS OTHERWISE NOTED.

   (E) REINFORCING BARS SHALL BE SECURELY TIED AT ALL INTERSECTIONS AND LAP SPLICES EXCEPT WHERE THE SPACING OF INTERSECTIONS IS LESS THAN ONE FOOT IN EACH DIRECTION, IN WHICH CASE ALTERNATE INTERSECTIONS SHALL BE TIED.

6. FOUNDATION:

   (A) FOR BORING LOGS AND OTHER GEOTECHNICAL INFORMATION, SEE FOUNDATION REPORT BY PACIFIC GEOTECHNICAL ENGINEERS, INC. DATED FEBRUARY 24, 2012.

7. CONSTRUCTION NOTES:

   (A) SEE STANDARD SPECIFICATIONS AND SPECIAL PROVISIONS.

   (B) EXCEPT AS OTHERWISE NOTED, ALL VERTICAL DIMENSIONS ARE MEASURED PLUMB.

   (C) THE CONTRACTOR SHALL VERIFY ALL SITE CONDITIONS AND NOT RELY UPON THESE PLANS FOR STREAM LOCATION, ETC. CONDITIONS MAY DIFFER FROM THOSE SHOWN.

   (D) THE CONTRACTOR SHALL VERIFY THE LOCATION OF ALL UTILITY LINES AND NOTIFY THE RESPECTIVE OWNERS BEFORE COMMENCING WITH EXCAVATION, AND ANY TEMPORARY PILING OR SHEETING.

   (E) FOR CONCRETE FINISH SEE STANDARD SPECIFICATIONS AND SPECIAL PROVISIONS.

   (F) CONSTRUCTION JOINTS MAY BE RELOCATED OR ADDITIONAL ONES ADDED SUBJECT TO THE APPROVAL OF THE ENGINEER.

   (G) UNLESS OTHERWISE NOTED, ALL EXPOSED CONCRETE EDGES SHALL BE CHAMFERED 3/4"X3/4".

   (H) THE CONTRACTOR SHALL BE SOLELY RESPONSIBLE FOR THE PROTECTION OF ADJACENT PROPERTIES, UTILITIES AND EXISTING AND NEW STRUCTURES FROM DAMAGE DUE TO CONSTRUCTION. REPAIRING ANY DAMAGE SHALL BE AT THE CONTRACTOR'S OWN EXPENSE, TO THE SATISFACTION OF THE ENGINEER.

   (J) BOTTOM OF FOOTING OR SLAB EXCAVATION SHALL BE THOROUGHLY CLEANED OF LOOSE MATERIAL PRIOR TO PLACEMENT OF REINFORCING STEEL AND CONCRETE.

   (K) REMOVAL OF EXISTING STRUCTURES OR PORTIONS THEREOF SHALL COMPLY WITH SPEC. SECTION 202 AND THE BMP. IF REMOVAL OF EXISTING STRUCTURES OR PORTIONS THEREOF INVOLVES WORK OR EXCAVATION BELOW BOTTOM OF FOUNDATION FOR NEW CONSTRUCTION, THE AREA WHICH WAS DISTURBED BY THE REMOVAL OF OTHER WORK BELOW THE NEW FOUNDATION SHALL BE BACKFILLED WITH CLASS "D" CONCRETE. SUCH WORK SHALL BE INCIDENTAL TO THE REMOVAL WORK, AND NO SEPARATE PAYMENT SHALL BE MADE.

   (L) THE CONTRACTOR'S ATTENTION IS DIRECTED TO SUBSECTION 205.03(A)(1) OF THE SPECIAL PROVISION REGARDING THE PROTECTION OF THE SIDES OF EXCAVATION FROM CAVE-INS.

   (M) COVER AND CURE ALL CONCRETE FOR DROP STRUCTURE FOR SEVEN DAYS AFTER CONCRETE PLACEMENT. LEAVE FORMS FOR CONCRETE FOR DROP STRUCTURE WALLS ON FOR SEVEN DAYS AFTER CONCRETE PLACEMENT.

PREFINAL

RUSS S. MIYAHARA
LICENSED PROFESSIONAL ENGINEER
NO. 9444-S
HAWAII, U.S.A.

LICENSE EXPIRATION DATE: 4/30/12

THIS WORK WAS PREPARED BY ME OR UNDER MY SUPERVISION AND CONSTRUCTION OF THIS PROJECT WILL BE UNDER MY OBSERVATION.

KSF, INC.
615 PIIKOI STREET, SUITE 300
Honolulu, Hawaii 96814

COUNTY OF MAUI
DEPARTMENT OF PUBLIC WORKS
HAIKU, MAKAWAO, MAUI, HAWAII

HAIKU ROAD CULVERT REPLACEMENT
JOB NO. 08-11

STRUCTURAL GENERAL NOTES

Date: MARCH 2012
Design By: RM
Drawn By: CB

SO-1

SHEET 18 OF 36 SHEETS

03/30/12 1:44:37 PM Z:\00 ONGOING\10-015-HAIKU EMERGENCY REPAIR CULVERT\03-30-12\HRC-S001.DWG

TRUE NORTH
SCALE: 1"=10'

56.00' PORTION OF EXIST. R.C. BOX CULVERT TO REMAIN

37.00' RECONSTRUCT R.C. BOX CULVERT

72.00' CONSTRUCT ENERGY DISSIPATOR BASIN

26.00' CONSTRUCT GROUTED RIPRAP TRANSITION

4" REGRADE STREAM CHANNEL TO MATCH RIPRAP OUTLET

STA. 0+00 BEGIN EXISTING R.C. BOX CULVERT

STA. 0+55 BEGIN RECONSTRUCT R.C. BOX CULVERT

STA. 0+93 END RECONSTRUCT R.C. BOX CULVERT & BEGIN ENERGY DISSIPATOR BASIN

STA. 1+65 END ENERGY DISSIPATOR BASIN & BEGIN GROUTED RIPRAP TRANSITION

STA. 1+91 END GROUTED RIPRAP TRANSITION

CONSTRUCT GRATED DROP INLET. SEE DWG. S3-1

GROUTED RIPRAP TRANSITION. SEE DWG. S4-1

NOTE:
SEE CIVIL DRAWINGS SHEET C-2 FOR SITEWORK LAYOUT DETAILS.

6'-0" OR AS DIRECTED BY THE ENGINEER

ENERGY DISSIPATOR BASIN SEE DWG. S2-1

EXISTING BOX CULVERT

6.0'Wx6.0'H RECONST. R.C. BOX CULVERT SEE DWG S1-1

℄ 0+00 — 165°49'48" — 39.41' — 0+50 — 1+00 — 165°49'48" — 151.59' — 1+50 — 7 SPA. @ 3.00' = 21.00' — 2+00 — ℄

DRILLED SHAFTS SEE DWG. S0-3

LEGEND:

- PRODUCTION SHAFT
- TRIAL SHAFT

SITEWORK PLAN (A / S0-2)
SCALE: 1" = 10'

GRAPHIC SCALE:
1" = 10' — 10' 0 10' 20'

PREFINAL

RUSS S. MIYAHARA — LICENSED PROFESSIONAL ENGINEER — NO. 9444-S — HAWAII, U.S.A.

LICENSE EXPIRATION DATE: 4/30/12

THIS WORK WAS PREPARED BY ME OR UNDER MY SUPERVISION AND CONSTRUCTION OF THIS PROJECT WILL BE UNDER MY OBSERVATION.

KSF, INC.
615 PIIKOI STREET, SUITE 300
Honolulu, Hawaii 96814

COUNTY OF MAUI
DEPARTMENT OF PUBLIC WORKS
HAIKU, MAKAWAO, MAUI, HAWAII

HAIKU ROAD CULVERT REPLACEMENT
JOB NO. 08-11

SITE PLAN

Date: MARCH 2012
Design By: RM
Drawn By: CB
S0-2
SHEET 10 OF 38 SHEETS

03/30/12 1:44:59 PM Z:\00 ONGOING\10-015-HAIKU EMERGENCY REPAIR CULVERT\03-30-12\HRC-S002.DWG

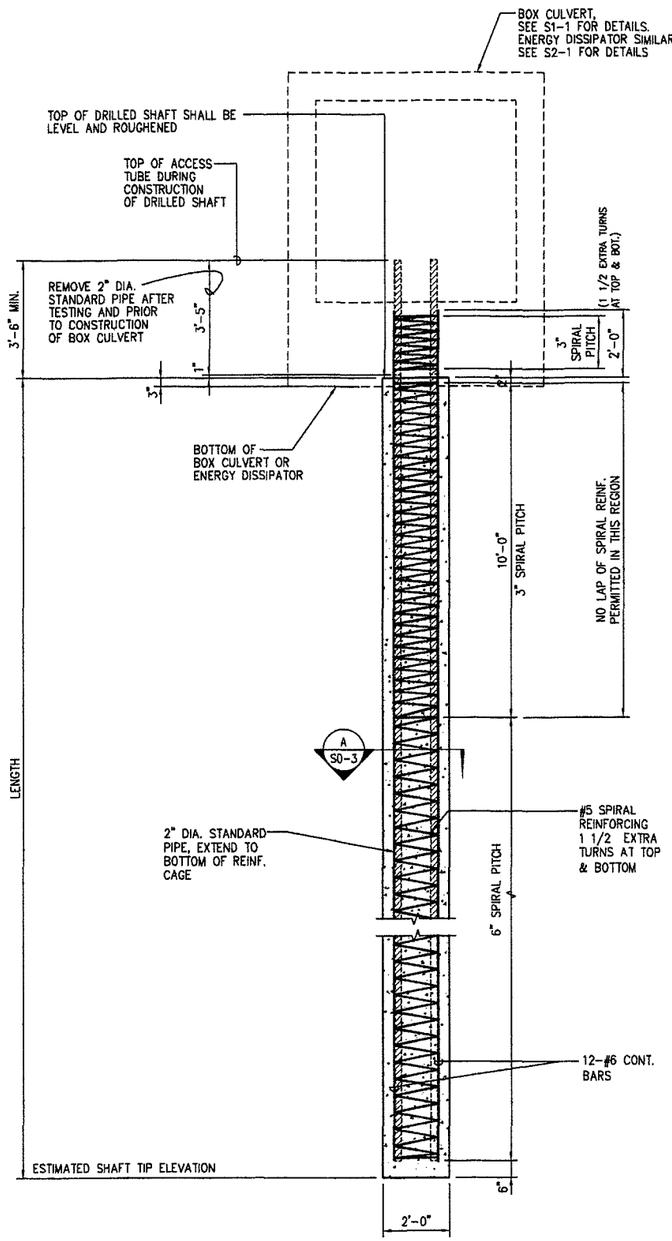

TYPE 24 TYPICAL DRILLED SHAFT ELEVATION

NOT TO SCALE

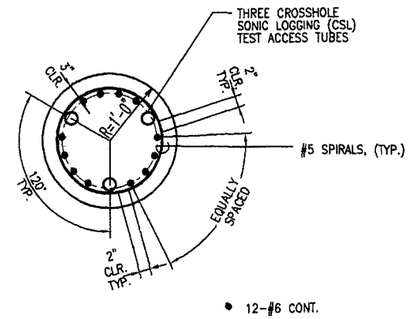

TYPE 24 -SECTION A / S0-3

SCALE: 1" = 1'-0"

NOTES:

1. DRILLED SHAFT CONCRETE SHALL BE 4500 PSI STRENGTH AT 28 DAYS.
2. CONCRETE OR OTHER NON-CORROSIVE SPACING DEVICES SHALL BE USED TO MAINTAIN THE REINFORCEMENT CAGE IN POSITION WITHIN THE SHAFT.
3. THE CONTRACTOR SHALL REFER TO THE SPECIAL PROVISIONS SECTIONS 511 "DRILLED SHAFT".
4. ALL EXCAVATION AND DRILLING OPERATION FOR FOUNDATIONS SHALL BE MONITORED BY THE ENGINEER.
5. BOTTOM OF DRILLED SHAFT TIP ELEVATIONS SHALL BE VERIFIED BY THE ENGINEER PRIOR TO INSTALLING REINFORCING BAR CAGE.
6. CONCRETE SHALL NOT BE PLACED WITHOUT APPROVAL OF THE ENGINEER.
7. DRILLED SHAFT TIPS ARE ESTIMATED. THE ACTUAL DRILLED SHAFT LENGTHS WILL BE DETERMINED BY THE ENGINEER. AFTER THE TRIAL SHAFT AND LOAD TEST.
8. LAP SPLICE LENGTH FOR #6 CONT. SHALL BE 3'-0". NO LAP SPLICES ARE ALLOWED IN THE UPPER HALF OF THE DRILLED SHAFT.
9. STAGGER SPLICE POINTS NOT MORE THAN 50% OF TOTAL AT ANY SECTION NORMAL TO THE AXIS OF THE MEMBER.
10. LAPPED SPLICES SHALL HAVE A MINIMUM OF 2'-0" VERTICALLY BETWEEN ENDS OF SPLICE POINTS.
11. LAP SPLICE LENGTH FOR #5 SPIRAL SHALL BE 3'-4".
12. SPIRALS MAY BE DISCONTINUOUS AT COLUMN-DRILLED SHAFT TRANSITION CAP REINFORCEMENT TO ALLOW FOR PLACING OF REINFORCEMENT. EACH END OF THE SPIRAL SHALL HAVE 1 1/2 EXTRA TURNS WITH A 135° HOOK AROUND VERTICAL REINFORCEMENT.
13. REINFORCING FOR TRIAL SHAFT SHALL BE THE SAME SIZE AND SPACING OF TYPICAL PRODUCTION SHAFT.
14. ALL PRODUCTION SHAFTS AND THE TRIAL SHAFT SHALL BE BY CROSSHOLE SONIC LOGGING (CSL) TESTING. SHAFTS INDICATING IRREGULAR CSL READINGS MAY BE SUBJECT TO ADDITIONAL TESTING.
15. CONSTRUCT EVERY OTHER SHAFT (ALLOW CONCRETE TO SET-UP AT LEAST OVERNIGHT) BEFORE CONSTRUCTING THE IN-BETWEEN SHAFTS.

PREFINAL

RUSS S. MIYAHARA LICENSED PROFESSIONAL ENGINEER NO. 9444-S HAWAII, U.S.A.

LICENSE EXPIRATION DATE: 4/30/12

THIS WORK WAS PREPARED BY ME OR UNDER MY SUPERVISION AND CONSTRUCTION OF THIS PROJECT WILL BE UNDER MY OBSERVATION.

KSF, INC.
615 PIIKOI STREET, SUITE 300
Honolulu, Hawaii 96814

COUNTY OF MAUI
DEPARTMENT OF PUBLIC WORKS
HAIKU, MAKAWAO, MAUI, HAWAII

HAIKU ROAD CULVERT REPLACEMENT
JOB NO. 08-11

DRILLED SHAFT

Date: MARCH 2012
Design By: RM
Drawn By: CB
S0-3
SHEET 20 OF 36 SHEETS

03/30/12 1:45:33 PM Z:\00 ONGOING\10-015-HAIKU EMERGENCY REPAIR CULVERT\03-30-12\HRC-S003.DWG

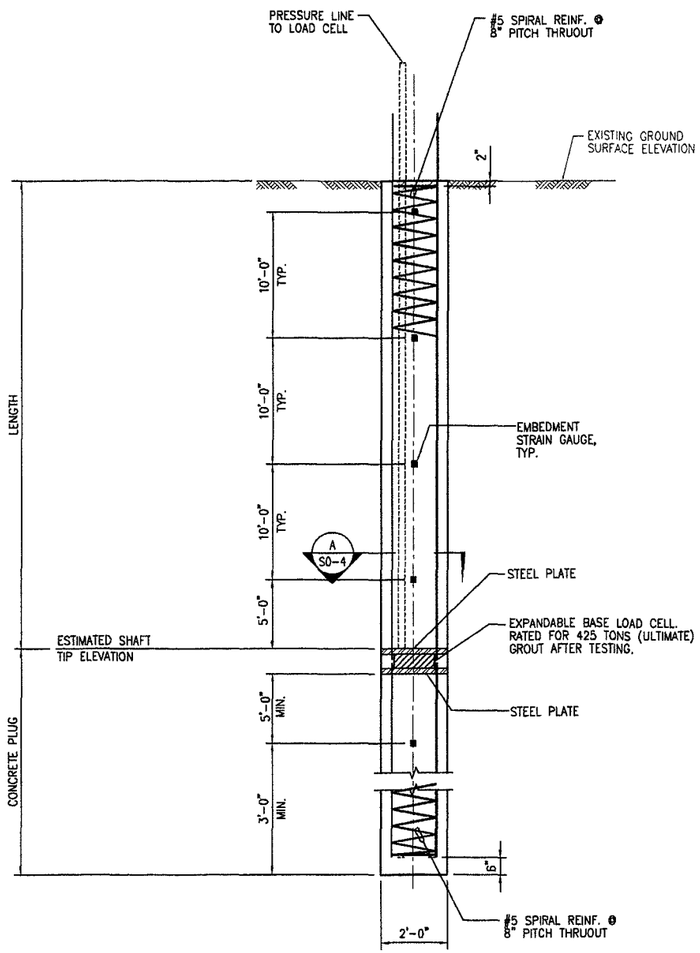

LOAD TEST SHAFT DETAIL
NOT TO SCALE

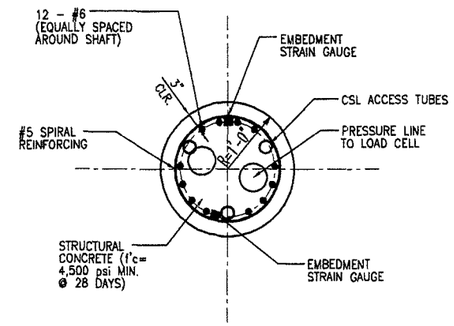

SECTION A / S0-4
SCALE: 1" = 1'-0"

NOTES:
1. STRAIN GAUGE ELEVATIONS SUBJECT TO MODIFICATIONS BY ENGINEER BASED ON SUBSURFACE CONDITIONS ENCOUNTERED DURING DRILLING FOR TRIAL SHAFT.
2. SEE SPECIAL PROVISIONS SECTION 511 FOR TESTING REQUIREMENTS.

PREFINAL

RISS S. MIYAMARA LICENSED PROFESSIONAL ENGINEER NO. 9444-S HAWAII, U.S.A.

LICENSE EXPIRATION DATE: 4/30/12
THIS WORK WAS PREPARED BY ME OR UNDER MY SUPERVISION AND CONSTRUCTION OF THIS PROJECT WILL BE UNDER MY OBSERVATION.

KSF, INC.
615 PIIKOI STREET, SUITE 300
Honolulu, Hawaii 96814

COUNTY OF MAUI
DEPARTMENT OF PUBLIC WORKS
HAIKU, MAKAWAO, MAUI, HAWAII
HAIKU ROAD CULVERT REPLACEMENT
JOB NO. 08-11

TRIAL SHAFT DETAILS

Date: MARCH 2012
Design By: RM
Drawn By: CB
S0-4
SHEET 21 OF 36 SHEETS

03/30/12 1:46:05 PM Z:\00 ONGOING\10-015-HAIKU EMERGENCY REPAIR CULVERT\03-30-12\HRC-S004.DWG

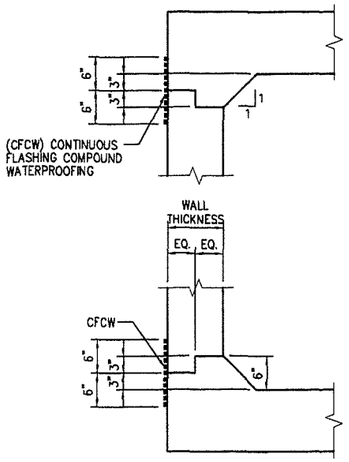

1 / S0-5 TYPICAL FILLET KEY DETAIL
SCALE: 1" = 1'-0"

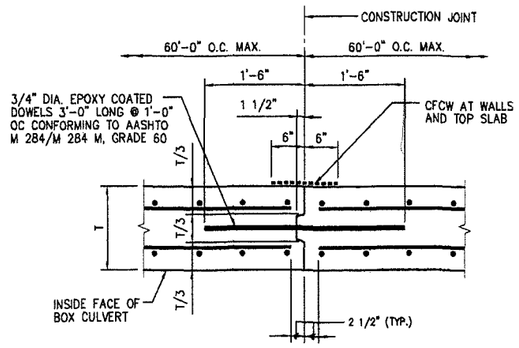

2 / S0-5 CONSTRUCTION JOINT DETAIL
SCALE: 1" = 1'-0"

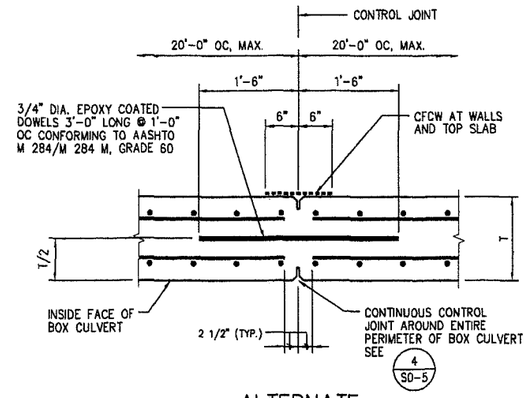

3 / S0-5 ALTERNATE CONTROL JOINT DETAIL
SCALE: 1" = 1'-0"

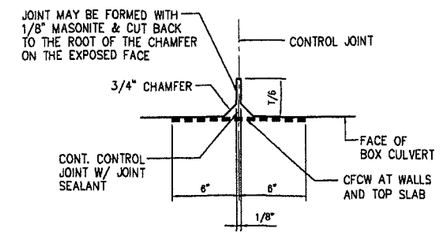

4 / S0-5 CONTROL JOINT DETAIL
SCALE: 3" = 1'-0"

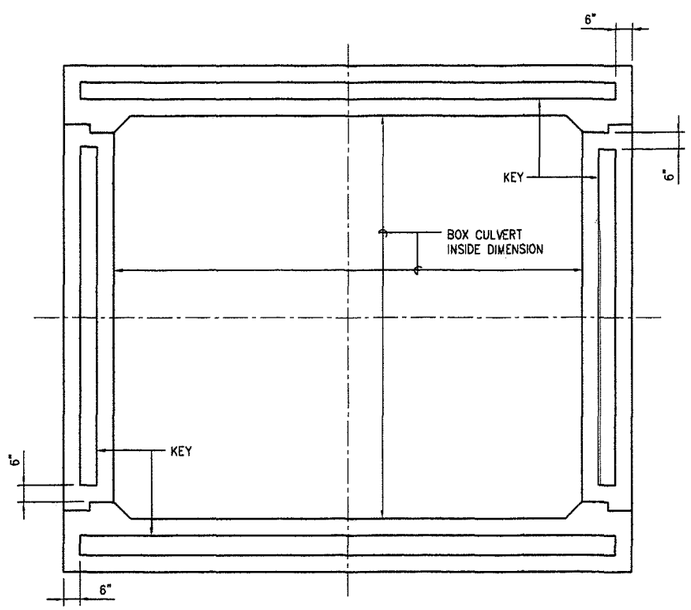

A / S0-5 CONSTRUCTION JOINT KEY SCHEMATIC
SCALE: 1/2" = 1'-0"

PREFINAL

RUSS S. MIYAHARA
LICENSED PROFESSIONAL ENGINEER
NO. 9444-S
HAWAII, U.S.A.

LICENSE EXPIRATION DATE: 4/30/12

THIS WORK WAS PREPARED BY ME OR UNDER MY SUPERVISION AND CONSTRUCTION OF THIS PROJECT WILL BE UNDER MY OBSERVATION.

KSF, INC.
615 PIIKOI STREET, SUITE 300
Honolulu, Hawaii 96814

COUNTY OF MAUI
DEPARTMENT OF PUBLIC WORKS
HAIKU, MAKAWAO, MAUI, HAWAII

HAIKU ROAD CULVERT REPLACEMENT
JOB NO. 08-11

TYPICAL JOINT DETAILS

Date: MARCH 2012
Design By: RM
Drawn By: CD
S0-5
SHEET 22 OF 38 SHEETS

03/30/12 1:46:31 PM Z:\00 ONGOING\10-015-HAIKU EMERGANCY REPAIR CULVERT\03-30-12\HRC-S005.DWG

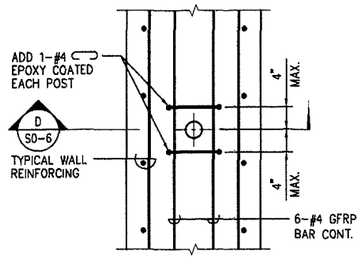

A S0-6 TYPICAL CHAINLINK POST – PLAN
SCALE: 1" = 1'-0"

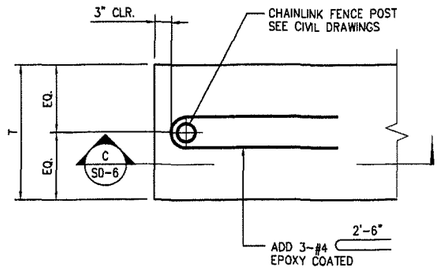

B S0-6 TYPICAL CHAINLINK POST AT END OF WALL – PLAN
SCALE: 1" = 1'-0"

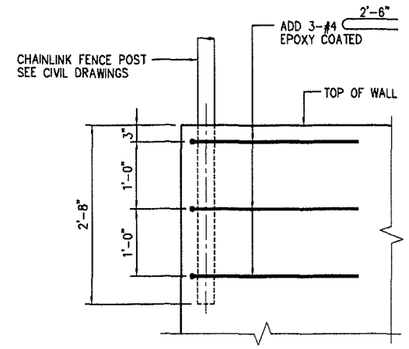

C S0-6 TYPICAL CHAINLINK POST AT END OF WALL – ELEVATION
SCALE: 1" = 1'-0"

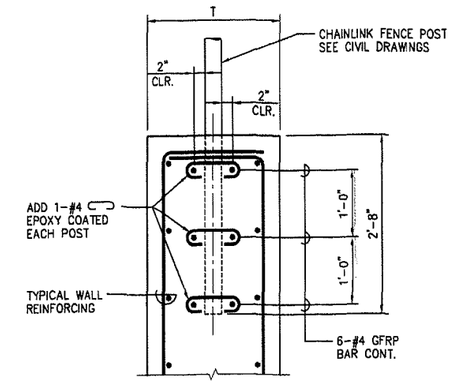

D S0-6 TYPICAL CHAINLINK POST AT RETAINING WALL – SECTION
SCALE: 1" = 1'-0"

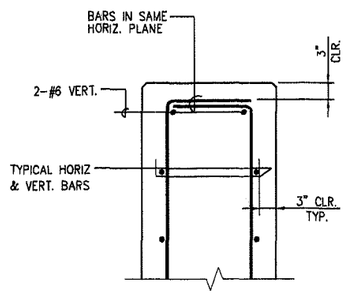

E S0-6 TYPICAL PLAN AT END OF WALL
SCALE: 1" = 1'-0"

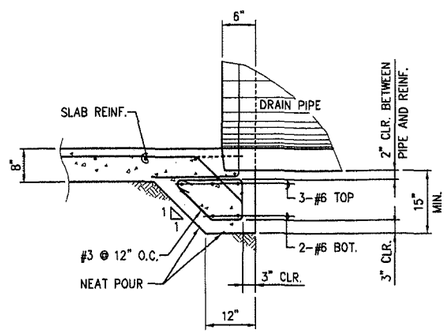

F S0-6 TYPICAL SECTION – THICKENED EDGE
SCALE: 3/4" = 1'-0"

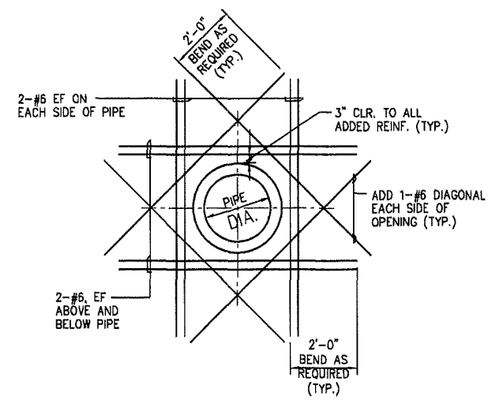

1 S0-6 ADDED REINFORCING PIPE OPENING
SCALE: 1/2" = 1'-0"

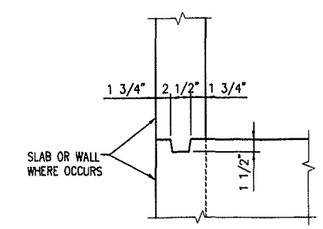

2 S0-6 TYPICAL KEY DETAIL
SCALE: 1 1/2" = 1'-0"

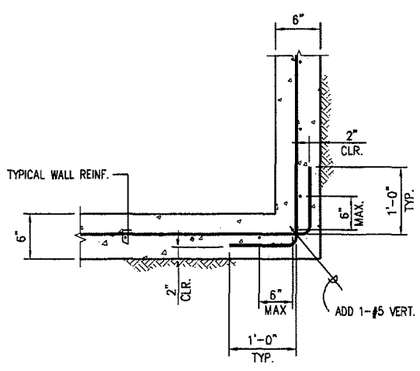

3 S0-6 TYPICAL CORNER REINFORCEMENT LAPPING (SINGLE CURTAIN) DETAIL
SCALE: 1" = 1'-0"

PREFINAL

RUSS S. MIYAHARA LICENSED PROFESSIONAL ENGINEER NO. 9444-S HAWAII, U.S.A.

LICENSE EXPIRATION DATE: 4/30/12

THIS WORK WAS PREPARED BY ME OR UNDER MY SUPERVISION AND CONSTRUCTION OF THIS PROJECT WILL BE UNDER MY OBSERVATION.

KSF, INC.
615 PIIKOI STREET, SUITE 300
Honolulu, Hawaii 96814

COUNTY OF MAUI
DEPARTMENT OF PUBLIC WORKS
HAIKU, MAKAWAO, MAUI, HAWAII

HAIKU ROAD CULVERT REPLACEMENT
JOB NO. 08-11

TYPICAL DETAILS

Date: MARCH 2012
Design By: RM
Drawn By: CB

S0-6

SHEET 23 OF 36 SHEETS

03/30/12 1:46:57 PM Z:\00 ONGOING\10-015-HAIKU EMERGENCY REPAIR CULVERT\03-30-12\HRC-S006.DWG

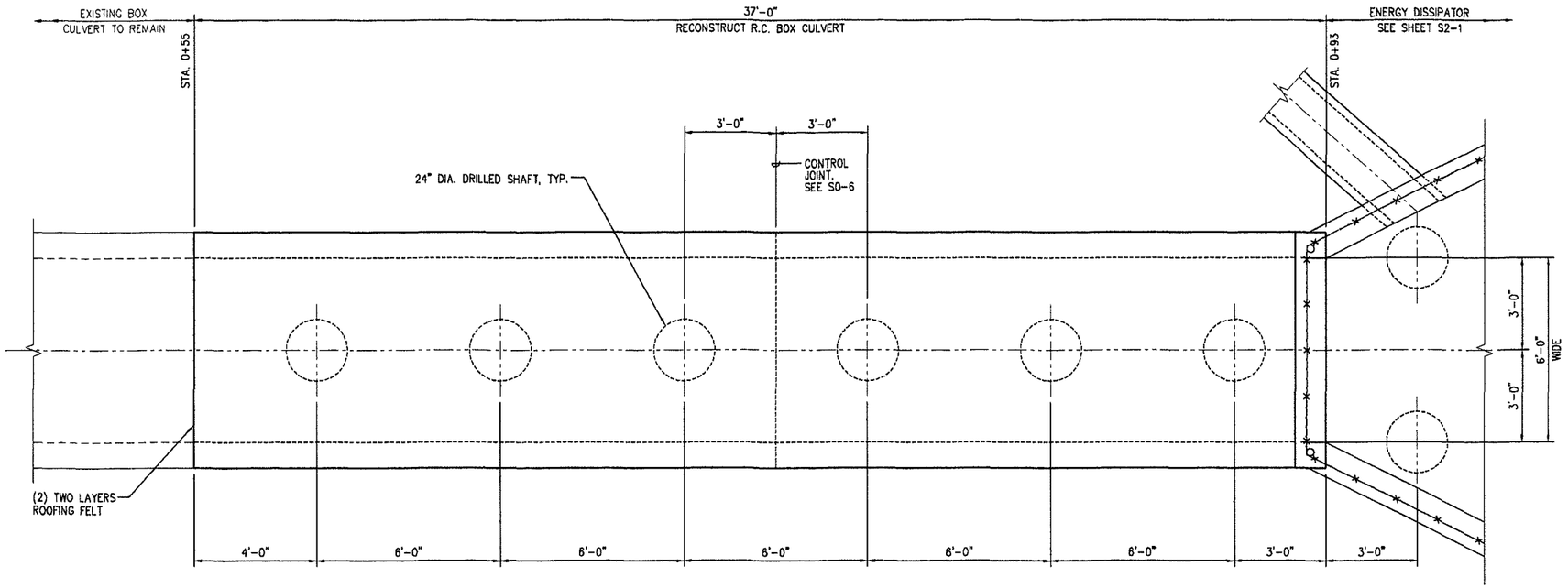

A S1-1 BOX CULVERT – PLAN
SCALE: 1/2" = 1'-0"

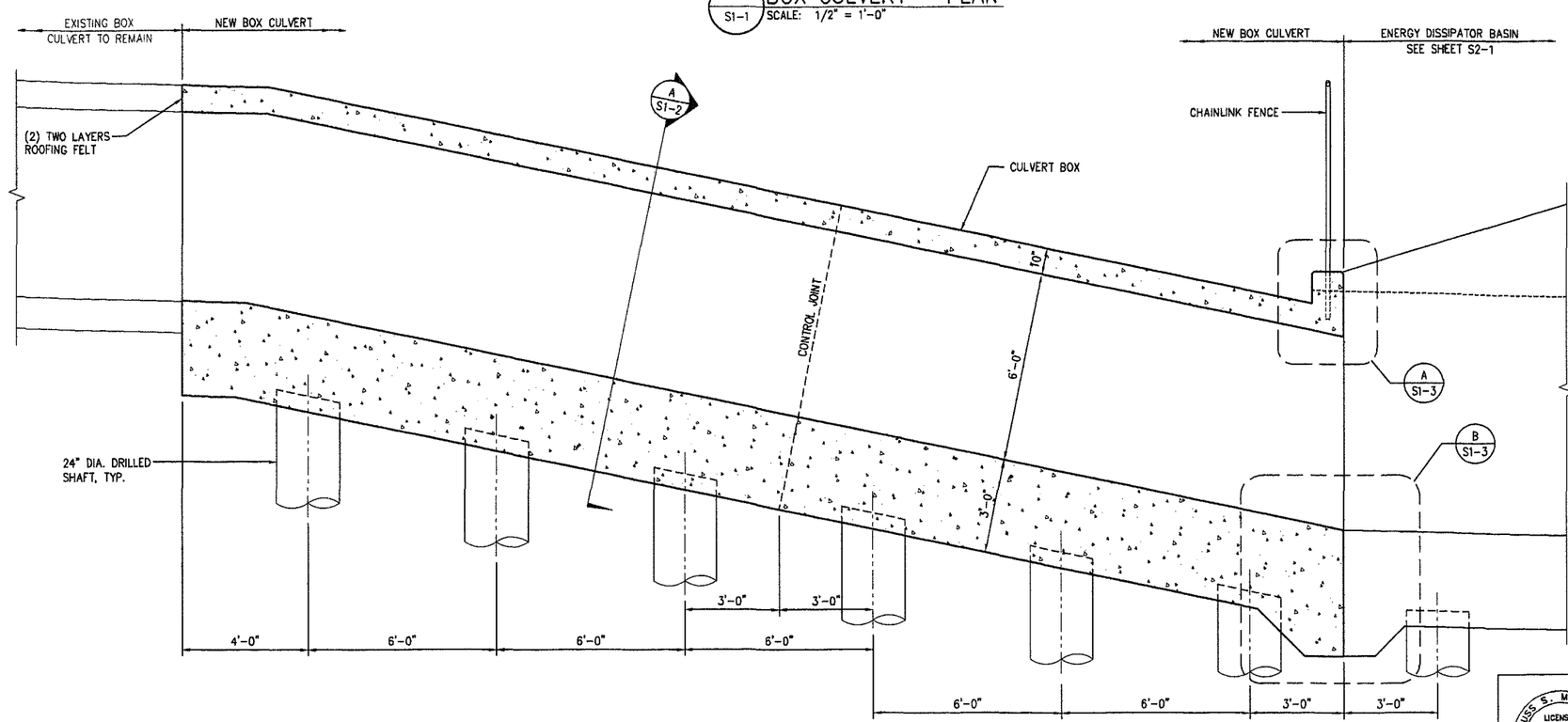

B S1-1 BOX CULVERT – SECTION
SCALE: 1/2" = 1'-0"

NOTES:
SEE CIVIL DRAWINGS SHEET C-3
FOR PROFILE AND INVERTS.

PREFINAL

RUSS S. MIYAHARA
LICENSED PROFESSIONAL ENGINEER
NO. 9444-S
HAWAII, U.S.A.

LICENSE EXPIRATION DATE: 4/30/12
THIS WORK WAS PREPARED BY ME OR UNDER MY SUPERVISION AND CONSTRUCTION OF THIS PROJECT WILL BE UNDER MY OBSERVATION.

KSF, INC.
615 PIIKOI STREET, SUITE 300
Honolulu, Hawaii 96814

COUNTY OF MAUI
DEPARTMENT OF PUBLIC WORKS
HAIKU, MAKAWAO, MAUI, HAWAII
HAIKU ROAD CULVERT
REPLACEMENT
JOB NO. 08-11

BOX CULVERT PLAN AND SECTION

Date: MARCH 2012
Design By: RM
Drawn By: CB
S1-1
SHEET 24
OF 38 SHEETS

03/30/12 1:47:27 PM Z:\00 ONGOING\10-015-HAIKU EMERGENCY REPAIR CULVERT\03-30-12\HRC-S101.DWG

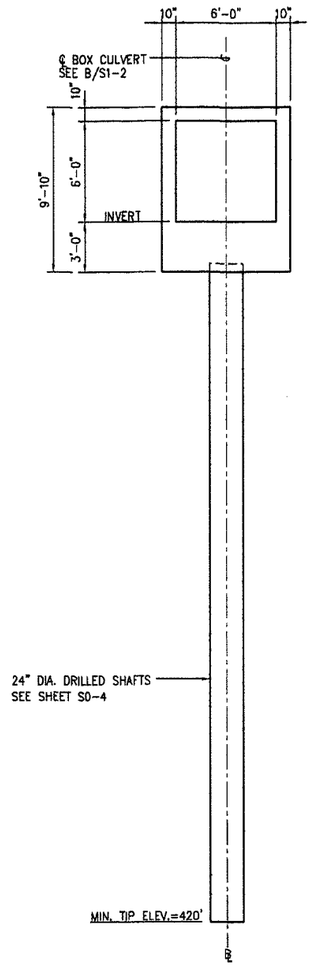

TYPICAL SECTION AT RECONSTRUCT R.C. BOX CULVERT
(STA. 0+56 TO STA. 0+93 AS NOTED)

SCALE: 1/4" = 1'-0"

A / S1-2

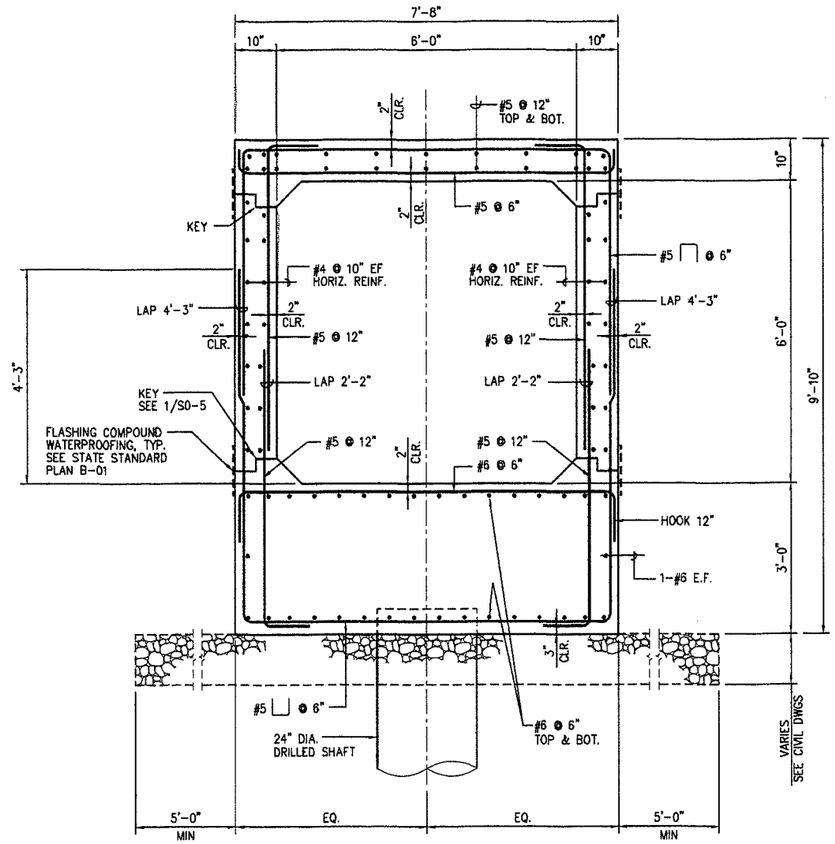

B / S1-2 BOX CULVERT – TYPICAL SECTION

SCALE: 3/4" = 1'-0"

PREFINAL

RUSS S. MIYAHARA
LICENSED PROFESSIONAL ENGINEER
NO. 9444-S
HAWAII, U.S.A.

LICENSE EXPIRATION DATE: 4/30/12

THIS WORK WAS PREPARED BY ME OR UNDER MY SUPERVISION AND CONSTRUCTION OF THIS PROJECT WILL BE UNDER MY OBSERVATION.

KSF, INC.
615 PIIKOI STREET, SUITE 300
Honolulu, Hawaii 96814

COUNTY OF MAUI
DEPARTMENT OF PUBLIC WORKS
HAIKU, MAKAWAO, MAUI, HAWAII

HAIKU ROAD CULVERT
REPLACEMENT
JOB NO. 08-11

BOX CULVERT SECTIONS

Date: MARCH 2012
Design By: RM
Drawn By: CB

S1-2

SHEET 25
OF 36 SHEETS

03/30/12 1:47:53 PM Z:\00 ONGOING\10-015-HAIKU EMERGNCY REPAIR CULVERT\03-30-12\HRC-S102.DWG

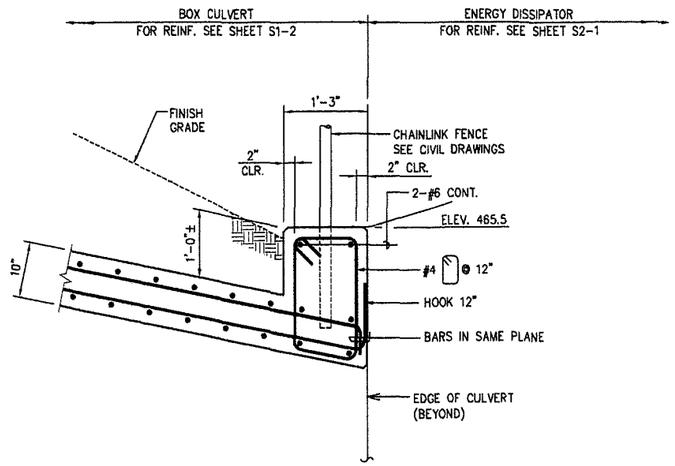

A / S1-3 SECTION
SCALE: 1" = 1'-0"

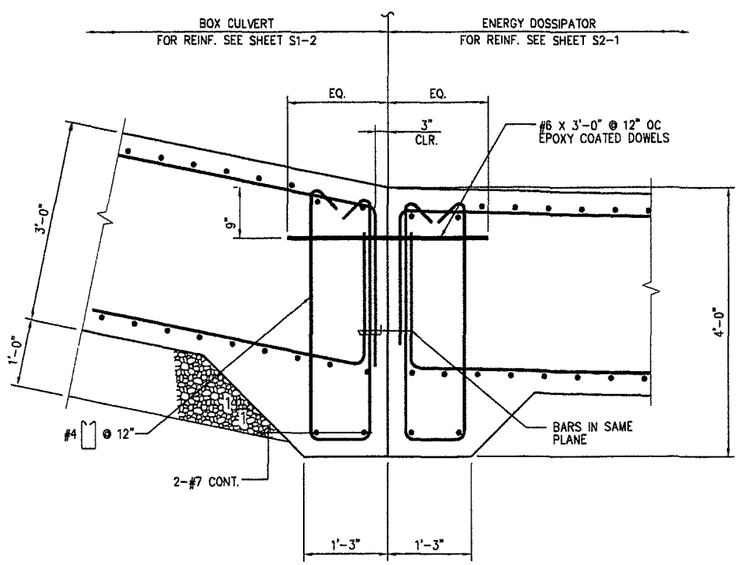

B / S1-3 SECTION
SCALE: 1" = 1'-0"

PREFINAL

RUSS S. MIYAHARA
LICENSED PROFESSIONAL ENGINEER
NO. 9444-S
HAWAII, U.S.A.

LICENSE EXPIRATION DATE: 4/30/12

THIS WORK WAS PREPARED BY ME OR UNDER MY SUPERVISION AND CONSTRUCTION OF THIS PROJECT WILL BE UNDER MY OBSERVATION.

KSF, INC.
615 PIIKOI STREET, SUITE 300
Honolulu, Hawaii 96814

COUNTY OF MAUI
DEPARTMENT OF PUBLIC WORKS
HAIKU, MAKAWAO, MAUI, HAWAII

HAIKU ROAD CULVERT
REPLACEMENT
JOB NO. 08-11

SECTIONS

Date: MARCH 2012
Design By: RM
Drawn By: CB

S1-3

SHEET 26
OF 36 SHEETS

03/30/12 1:48:20 PM Z:\00 ONGOING\10-015-HAIKU EMERGNCY REPAIR CULVERT\03-30-12\HRC-S103.DWG

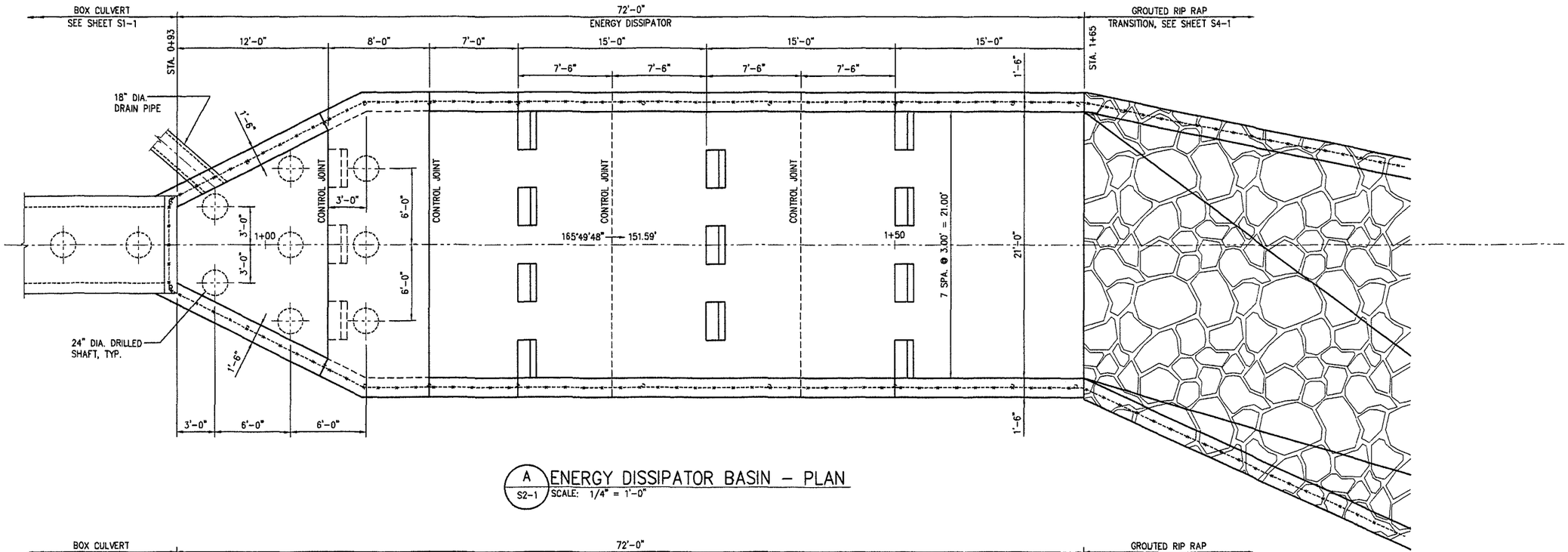

A S2-1 ENERGY DISSIPATOR BASIN – PLAN
SCALE: 1/4" = 1'-0"

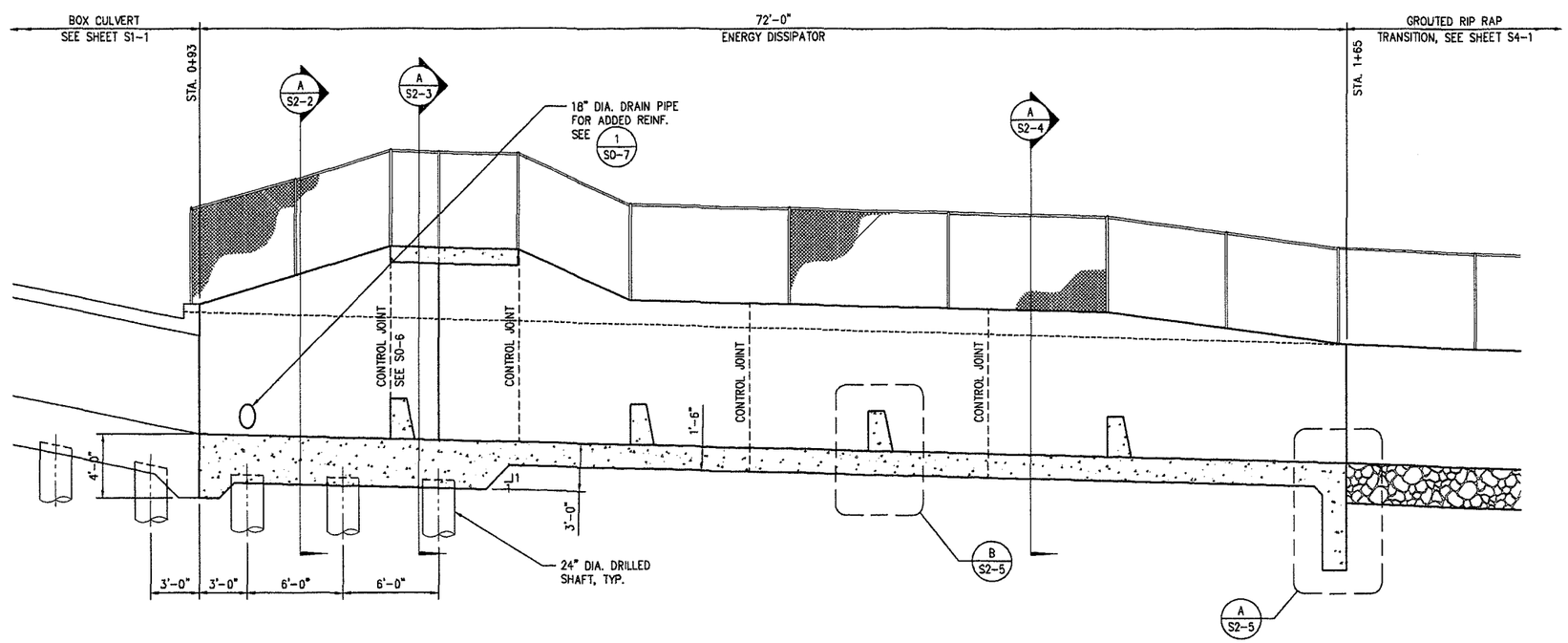

B S2-1 ENERGY DISSIPATOR BASIN – SECTION
SCALE: 1/4" = 1'-0"

NOTE:
SEE CIVIL DRAWINGS SHEET C-4 FOR
PROFILE, INVERTS, AND TOP OF WALL ELEVATIONS.

PREFINAL

RUSS S. MIYAHARA
LICENSED PROFESSIONAL ENGINEER
NO. 9444-S
HAWAII, U.S.A.

LICENSE EXPIRATION DATE: 4/30/12

THIS WORK WAS PREPARED BY ME OR UNDER MY SUPERVISION AND CONSTRUCTION OF THIS PROJECT WILL BE UNDER MY OBSERVATION.

KSF, INC.
615 PIIKOI STREET, SUITE 300
Honolulu, Hawaii 96814

COUNTY OF MAUI
DEPARTMENT OF PUBLIC WORKS
HAIKU, MAKAWAO, MAUI, HAWAII

HAIKU ROAD CULVERT
REPLACEMENT
JOB NO. 08-11

ENERGY DISSIPATOR BASIN PLAN AND SECTION

Date: MARCH 2012
Design By: RM
Drawn By: CB

S2-1

SHEET 27
OF 36 SHEETS

03/30/12 1:48:56 PM Z:\00 ONGOING\10-015-HAIKU EMERGNCY REPAIR CULVERT\03-30-12\HRC-S201.DWG

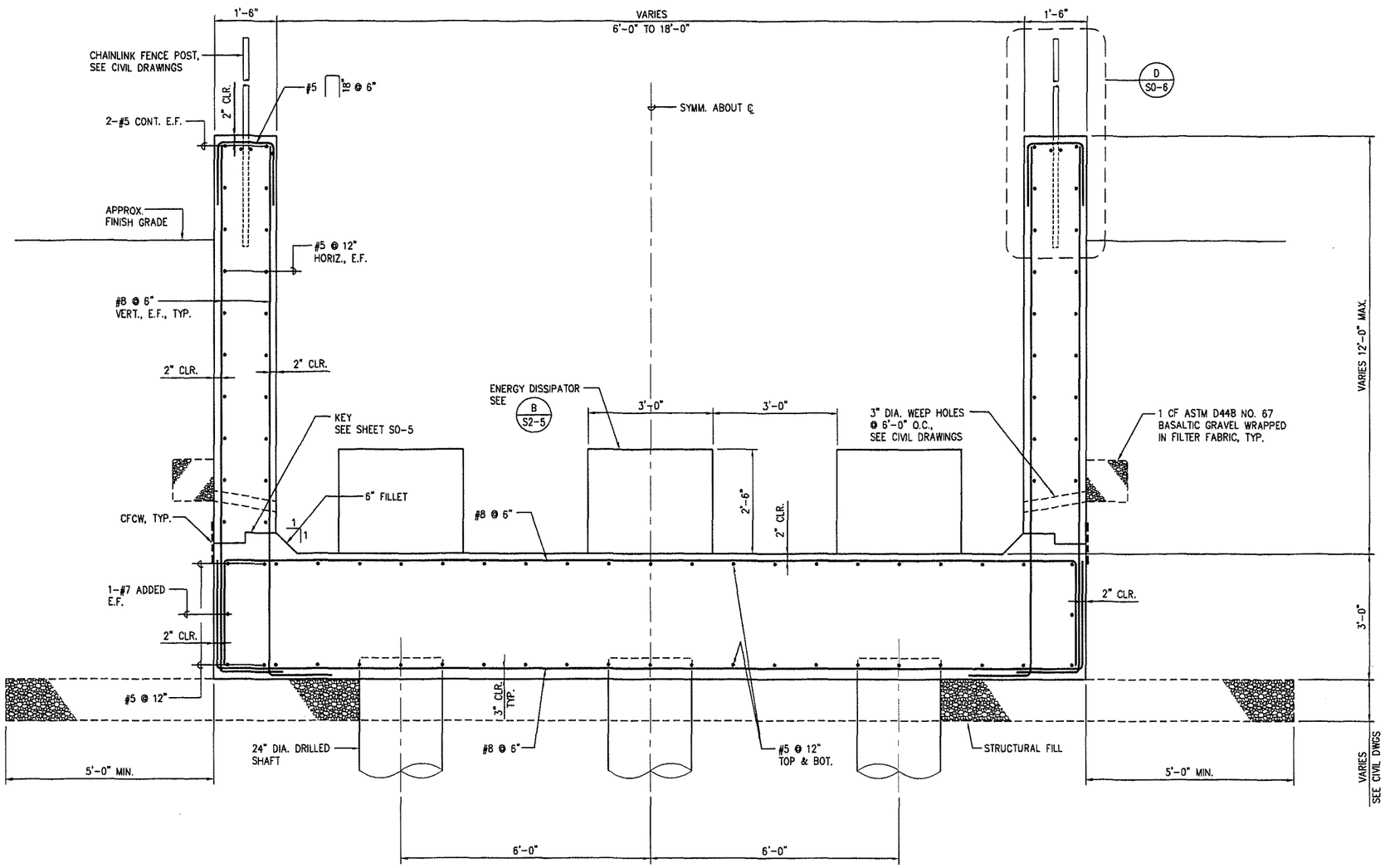

A / S2-2 ENERGY DISSIPATOR BASIN SECTION
SCALE: 3/4" = 1'-0"

PREFINAL

RUSS S. MIYAMASA
LICENSED PROFESSIONAL ENGINEER
NO. 9444-S
HAWAII, U.S.A.

LICENSE EXPIRATION DATE: 4/30/12

THIS WORK WAS PREPARED BY ME OR UNDER MY SUPERVISION AND CONSTRUCTION OF THIS PROJECT WILL BE UNDER MY OBSERVATION.

KSF, INC.
615 PIIKOI STREET, SUITE 300
Honolulu, Hawaii 96814

COUNTY OF MAUI
DEPARTMENT OF PUBLIC WORKS
HAIKU, MAKAWAO, MAUI, HAWAII

HAIKU ROAD CULVERT REPLACEMENT
JOB NO. 08-11

SECTION

Date: MARCH 2012
Design By: RM
Drawn By: CB
S2-2
SHEET 28
OF 36 SHEETS

03/30/12 1:49:22 PM Z:\00 ONGOING\10-015-HAIKU EMERGNCY REPAIR CULVERT\03-30-12\HRC-S202.DWG

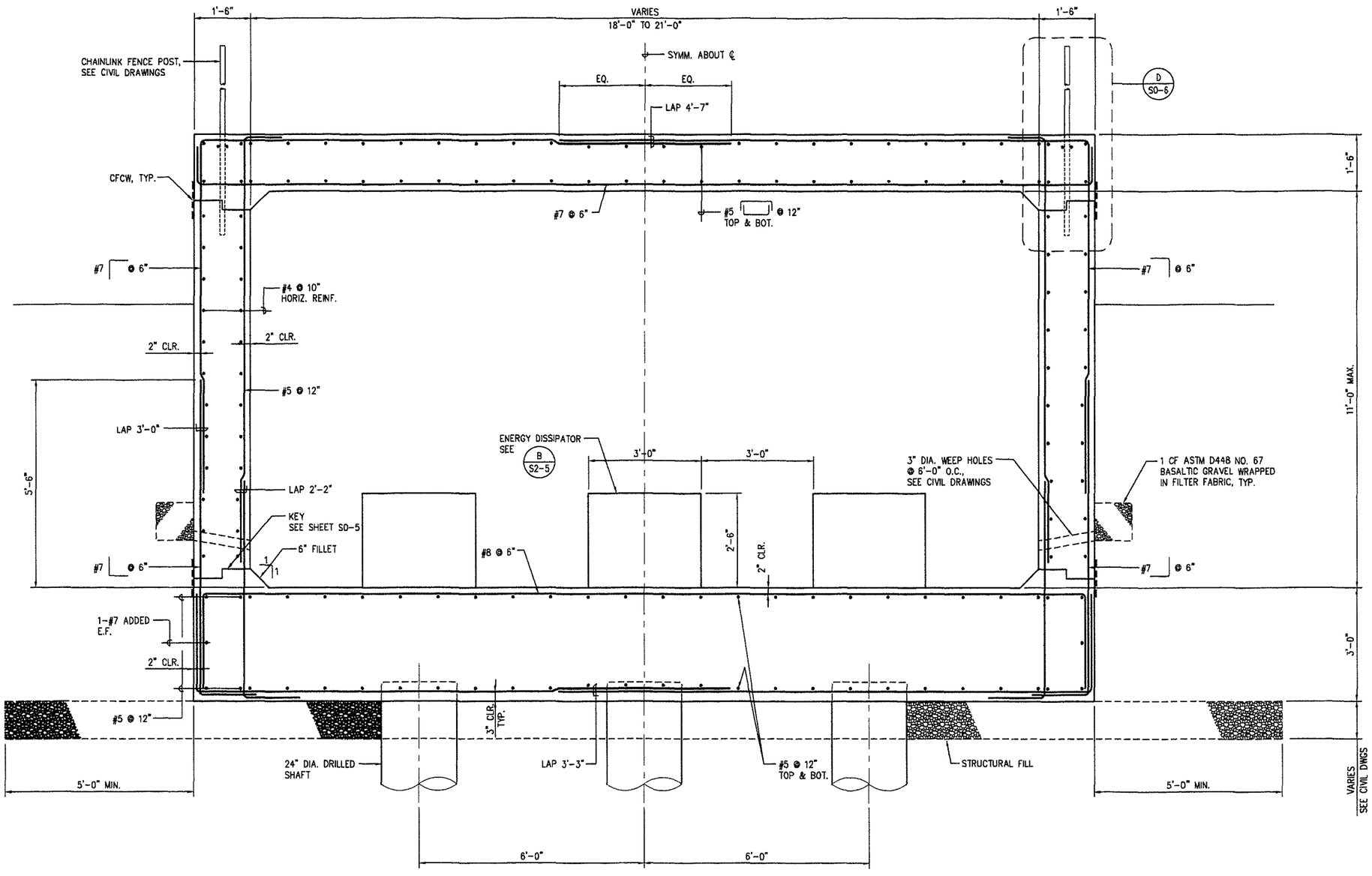

A / S2-3 ENERGY DISSIPATOR BASIN SECTION
SCALE: 3/4" = 1'-0"

PREFINAL

LICENSED PROFESSIONAL ENGINEER
RUSS S. MIYAHIRA
NO. 9444-S
HAWAII, U.S.A.

LICENSE EXPIRATION DATE: 4/30/12

THIS WORK WAS PREPARED BY ME OR UNDER MY SUPERVISION AND CONSTRUCTION OF THIS PROJECT WILL BE UNDER MY OBSERVATION.

KSF, INC.
615 PIIKOI STREET, SUITE 300
Honolulu, Hawaii 96814

COUNTY OF MAUI
DEPARTMENT OF PUBLIC WORKS
HAIKU, MAKAWAO, MAUI, HAWAII

HAIKU ROAD CULVERT
REPLACEMENT
JOB NO. 08-11

SECTION

Date: MARCH 2012
Design By: RM
Drawn By: CB

S2-3

SHEET 29
OF 36 SHEETS

03/30/12 1:49:38 PM Z:\00 ONGOING\10-015-HAIKU EMERGENCY REPAIR CULVERT\03-30-12\HRC-S202.DWG

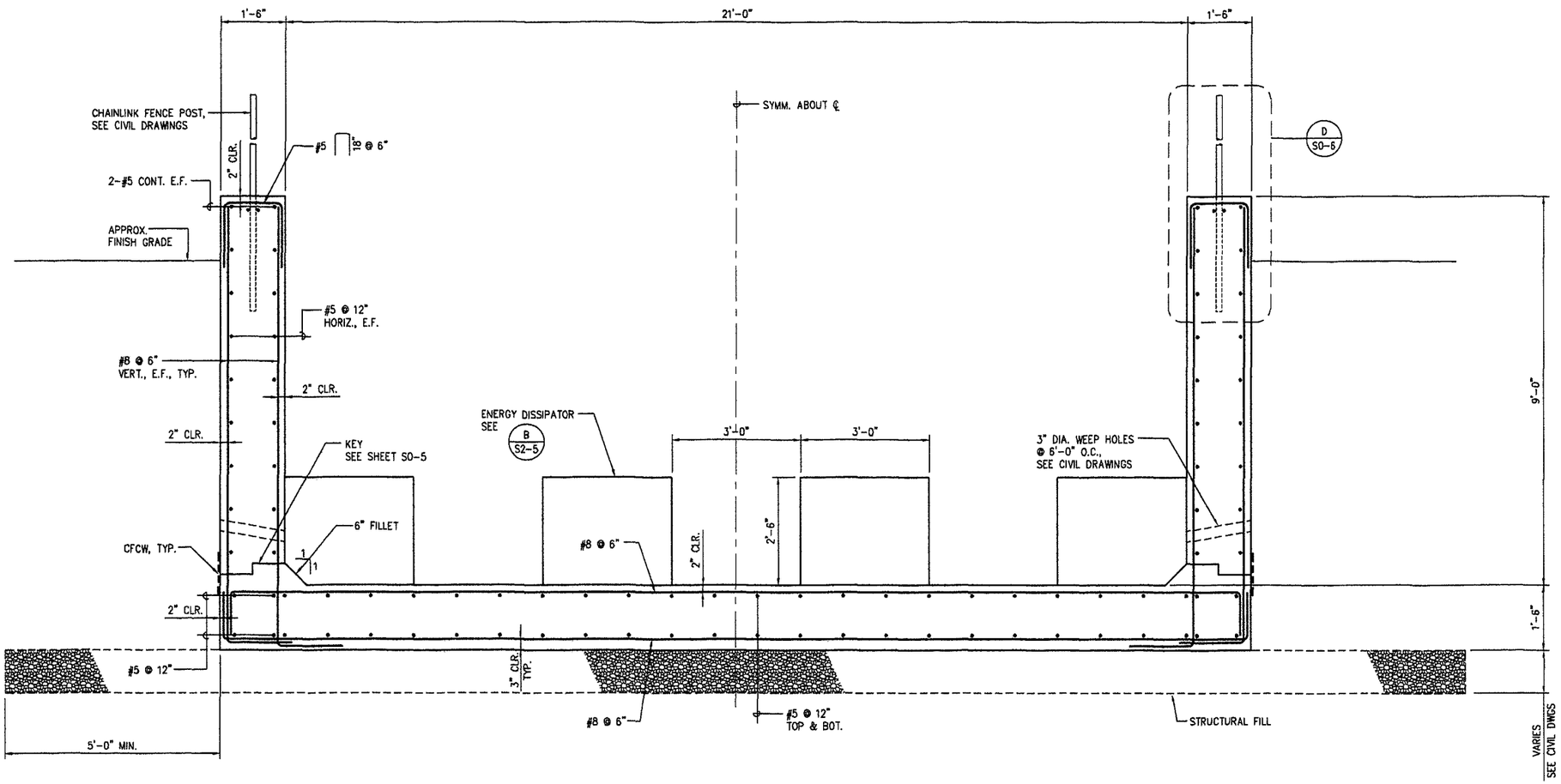

A S2-4 ENERGY DISSIPATOR BASIN SECTION
SCALE: 3/4" = 1'-0"

03/30/12 1:49:57 PM Z:\00 ONGOING\10-015-HAIKU EMERGNCY REPAIR CULVERT\03-30-12\HRC-S202.DWG

PREFINAL

RUSS S. MIYAHARA LICENSED PROFESSIONAL ENGINEER NO. 9444-S HAWAII, U.S.A.

LICENSE EXPIRATION DATE: 4/30/12

THIS WORK WAS PREPARED BY ME OR UNDER MY SUPERVISION AND CONSTRUCTION OF THIS PROJECT WILL BE UNDER MY OBSERVATION.

KSF, INC.
615 PIIKOI STREET, SUITE 300
Honolulu, Hawaii 96814

COUNTY OF MAUI
DEPARTMENT OF PUBLIC WORKS
HAIKU, MAKAWAO, MAUI, HAWAII
HAIKU ROAD CULVERT REPLACEMENT
JOB NO. 08-11

SECTION

Date: MARCH 2012
Design By: RM
Drawn By: CB
S2-4
SHEET 30 OF 36 SHEETS

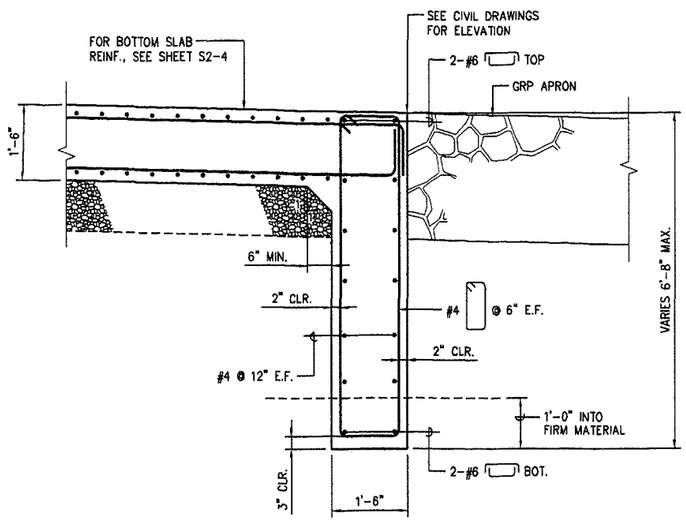

A S2-5 SECTION
SCALE: 3/4" = 1'-0"

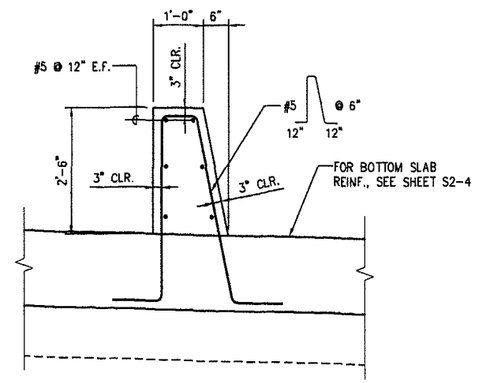

B S2-5 SECTION
SCALE: 3/4" = 1'-0"

PREFINAL

RUSS S. MIYAHARA
LICENSED PROFESSIONAL ENGINEER
NO. 9444-S
HAWAII, U.S.A.

LICENSE EXPIRATION DATE: 4/30/12

THIS WORK WAS PREPARED BY ME OR UNDER MY SUPERVISION AND CONSTRUCTION OF THIS PROJECT WILL BE UNDER MY OBSERVATION.

KSF, INC.
615 PIIKOI STREET, SUITE 300
Honolulu, Hawaii 96814

COUNTY OF MAUI
DEPARTMENT OF PUBLIC WORKS
HAIKU, MAKAWAO, MAUI, HAWAII

HAIKU ROAD CULVERT
REPLACEMENT
JOB NO. 08-11

SECTIONS

Date: MARCH 2012
Design By: RM
Drawn By: CB

S2-5

SHEET 31
OF 36 SHEETS

03/30/12 1:50:26 PM Z:\00 ONGOING\10-015-HAIKU EMERGNCY REPAIR CULVERT\03-30-12\HRC-S205.DWG

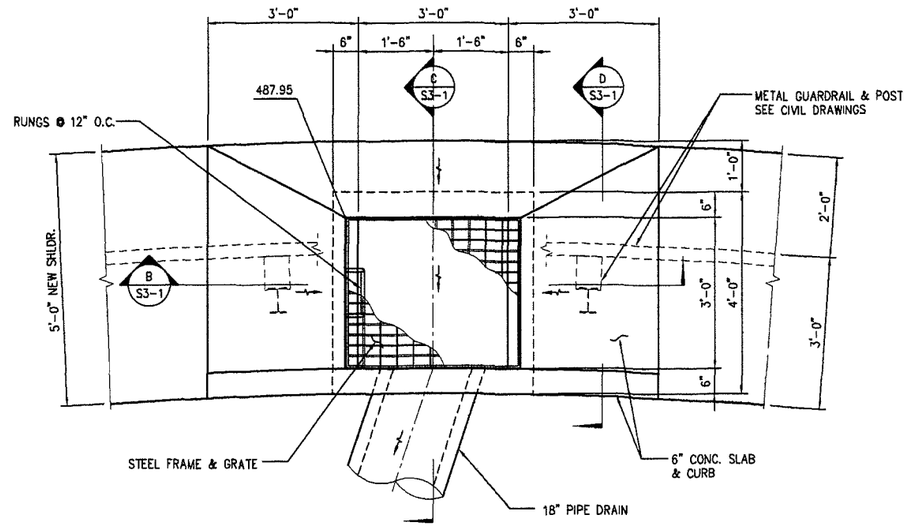

A S3-1 GRATED DROP INLET – PLAN
SCALE: 3/4" = 1'-0"

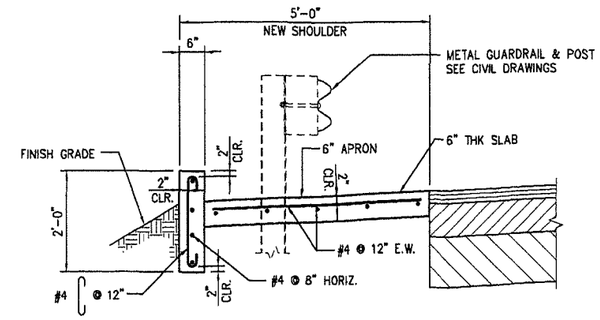

D S3-1 GRATED DROP INLET – SECTION
SCALE: 3/4" = 1'-0"

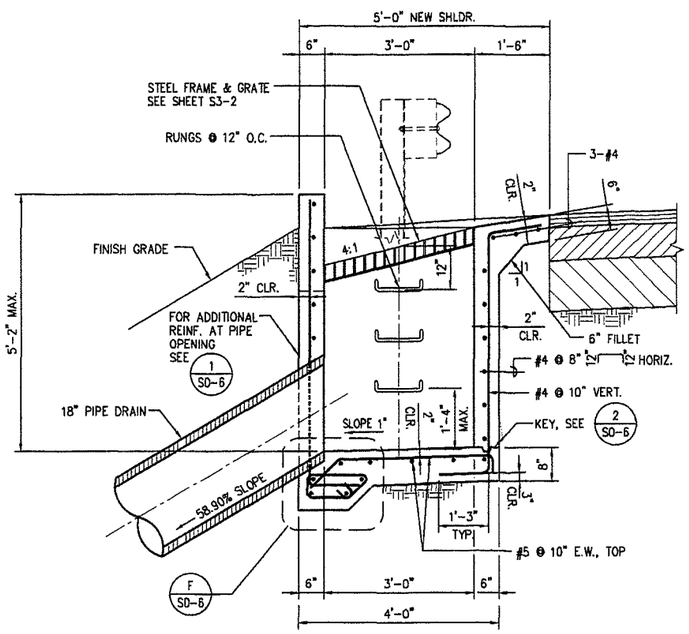

B S3-1 GRATED DROP INLET – SECTION
SCALE: 3/4" = 1'-0"

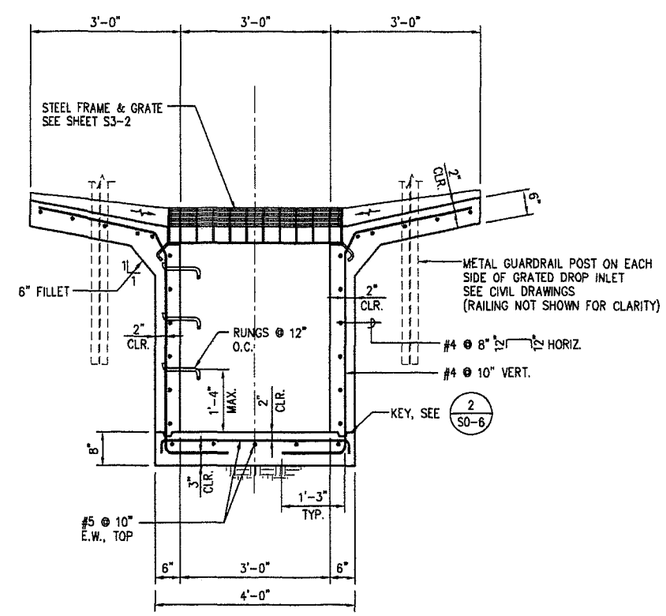

C S3-1 GRATED DROP INLET – SECTION
SCALE: 3/4" = 1'-0"

NOTE:
SEE CIVIL DRAWINGS SHEET C-6
FOR FINISH GRADES AND INVERTS.

PREFINAL

RUSS S. MIYAMARA
LICENSED PROFESSIONAL ENGINEER
NO. 9444-S
HAWAII, U.S.A.

LICENSE EXPIRATION DATE: 4/30/12
THIS WORK WAS PREPARED BY ME OR UNDER MY SUPERVISION AND CONSTRUCTION OF THIS PROJECT WILL BE UNDER MY OBSERVATION.

KSF, INC.
615 PIIKOI STREET, SUITE 300
Honolulu, Hawaii 96814

COUNTY OF MAUI
DEPARTMENT OF PUBLIC WORKS
HAIKU, MAKAWAO, MAUI, HAWAII
HAIKU ROAD CULVERT
REPLACEMENT
JOB NO. 08-11

GRATED DROP INLET PLAN AND SECTIONS

Date: MARCH 2012
Design By: RM
Drawn By: GB
S3-1
SHEET 32
OF 36 SHEETS

03/30/12 1:50:51 PM Z:\00 ONGOING\10-015-HAIKU EMERGENCY REPAIR CULVERT\03-30-12\HRC-S301.DWG

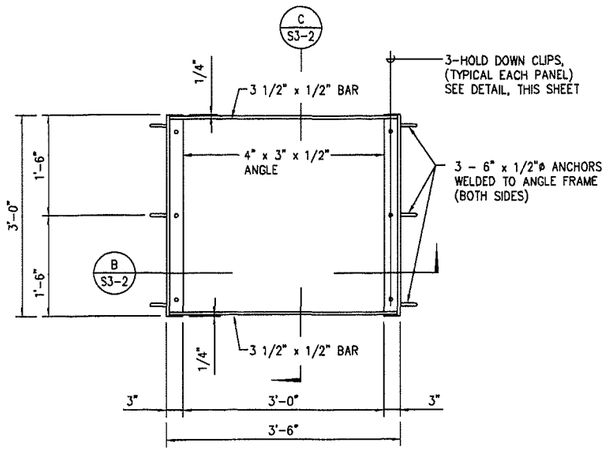

A PLAN
S3-2 SCALE: 1" = 1'-0"

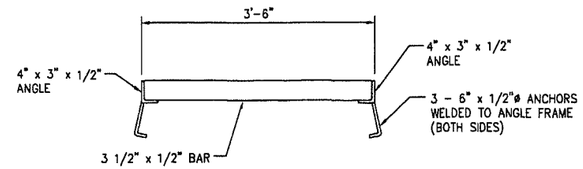

B SECTION
S3-2 SCALE: 1" = 1'-0"

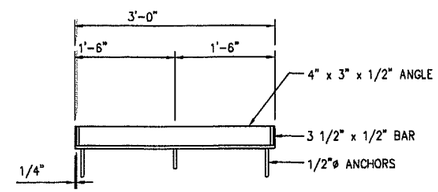

C SECTION
S3-2 SCALE: 1" = 1'-0"

STEEL GRATING NOTES:

1. FRAMES AND GRATINGS, INCLUDING BOLTS, NUTS AND WASHERS, SHALL BE HOT-DIP GALVANIZED AFTER FABRICATION.
2. ALL WELDS FOR THE FRAME SHALL BE 3/8", UNLESS OTHERWISE NOTED.
3. GRATES AND STEEL FOR ALL INLETS SHALL BE INSTALLED SO BEARING BARS PARALLEL TO DIRECTION OF DOMINANT SURFACE FLOW. SEE PLAN.

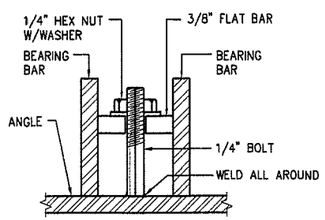

NOTE: 4 CLIPS PER GRATING PANEL

1 HOLD DOWN CLIP DETAIL
S3-2 NOT TO SCALE

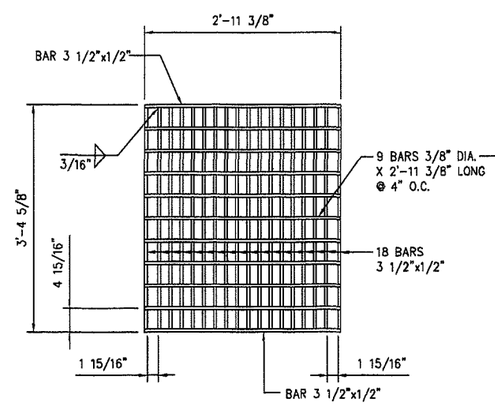

D GRATE - PLAN
S3-2 SCALE: 1" = 1'-0"

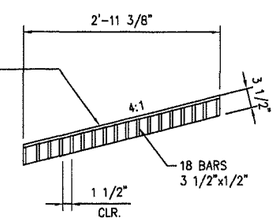

E SECTION
S3-2 SCALE: 1" = 1'-0"

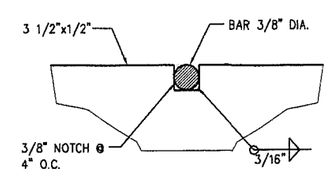

2 DETAIL
S3-2 NOT TO SCALE

PREFINAL

LICENSE EXPIRATION DATE: 4/30/12

THIS WORK WAS PREPARED BY ME OR UNDER MY SUPERVISION AND CONSTRUCTION OF THIS PROJECT WILL BE UNDER MY OBSERVATION.

RUSS S. MIYAHARA LICENSED PROFESSIONAL ENGINEER NO. 9444-S HAWAII, U.S.A.

KSF, INC.
615 PIIKOI STREET, SUITE 300
Honolulu, Hawaii 96814

COUNTY OF MAUI
DEPARTMENT OF PUBLIC WORKS
HAIKU, MAKAWAO, MAUI, HAWAII
HAIKU ROAD CULVERT REPLACEMENT
JOB NO. 08-11

FRAME AND GRATE TYPICAL DETAILS

Date: MARCH 2012
Design By: RM
Drawn By: CB
S3-2
SHEET 33 OF 36 SHEETS

03/30/12 1:51:15 PM Z:\00 ONGOING\10-015-HAIKU EMERGNCY REPAIR CULVERT\03-30-12\HRC-S302.DWG

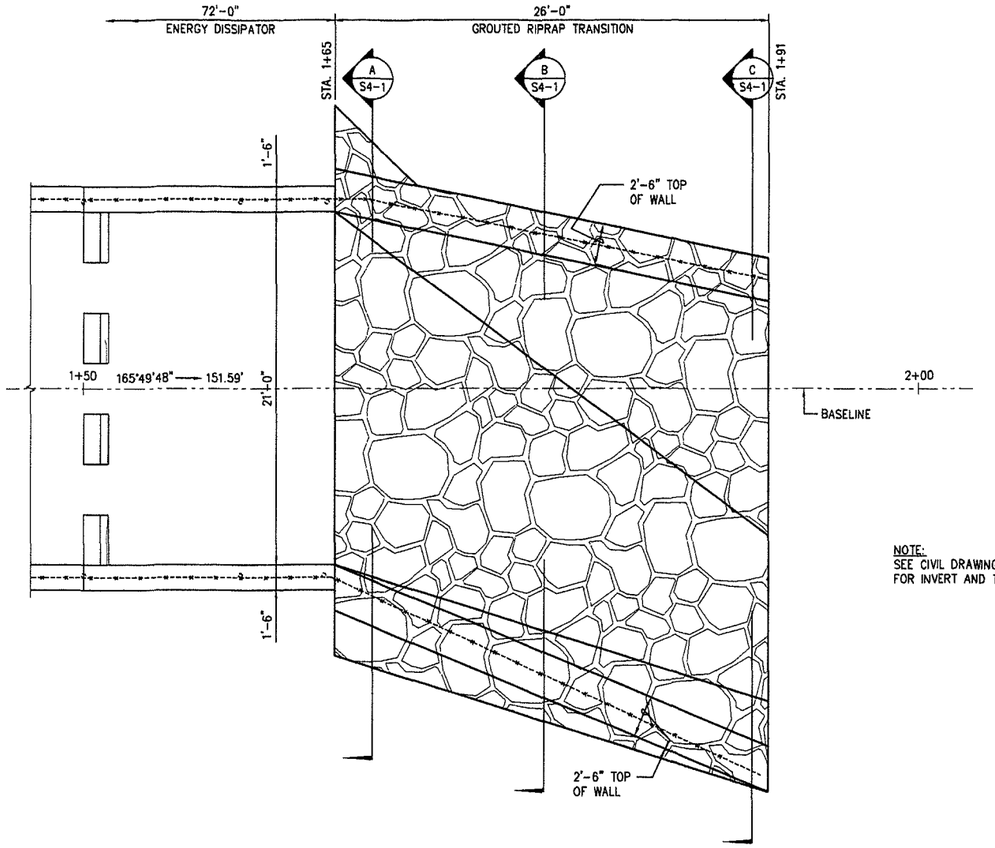

NOTE:
SEE CIVIL DRAWINGS SHEET C-4
FOR INVERT AND TOP WALL ELEVATIONS.

A S4-1 GROUTED RIPRAP – PLAN
SCALE: 1/4" = 1'-0"

03/30/12 1:51:40 PM Z:\00 ONGOING\10-015-HAIKU EMERGENCY REPAIR CULVERT\03-30-12\HRC-S401.DWG

PREFINAL

RUSS S. MIYAMARU
LICENSED PROFESSIONAL ENGINEER
NO. 9444-S
HAWAII, U.S.A.

LICENSE EXPIRATION DATE: 4/30/12
THIS WORK WAS PREPARED BY ME OR UNDER MY SUPERVISION AND CONSTRUCTION OF THIS PROJECT WILL BE UNDER MY OBSERVATION.

KSF, INC.
615 PIIKOI STREET, SUITE 300
Honolulu, Hawaii 96814

COUNTY OF MAUI
DEPARTMENT OF PUBLIC WORKS
HAIKU, MAKAWAO, MAUI, HAWAII
HAIKU ROAD CULVERT
REPLACEMENT
JOB NO. 08-11

GROUTED RIPRAP PLAN

Date: MARCH 2012
Design By: RM
Drawn By: CB
S4-1
SHEET 34
OF 36 SHEETS

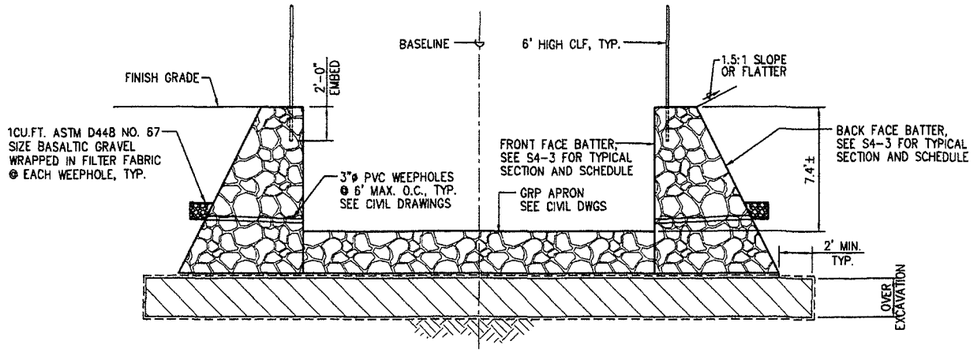

A / S4-2 TYPICAL SECTION AT GROUTED RIPRAP TRANSITION (STA. 1+65 TO STA 1+91)
SCALE: 1/4" = 1'-0"

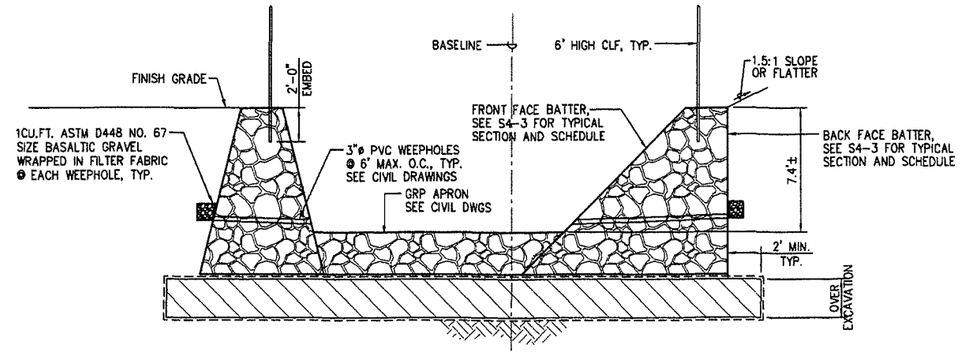

B / S4-2 TYPICAL SECTION AT GROUTED RIPRAP TRANSITION (STA. 1+65 TO STA 1+91)
SCALE: 1/4" = 1'-0"

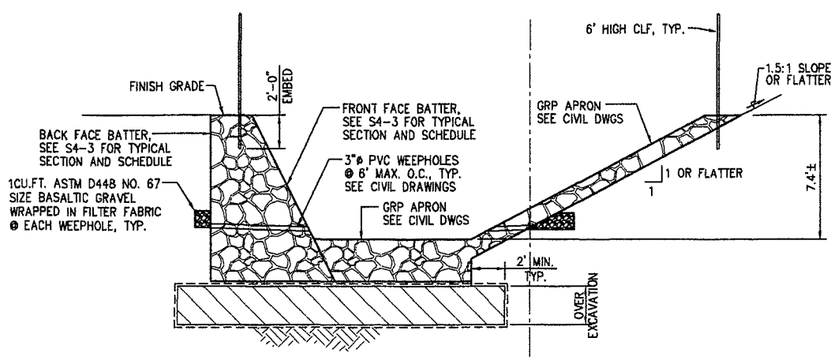

C / S4-2 TYPICAL SECTION AT GROUTED RIPRAP TRANSITION (STA. 1+65 TO STA 1+91)
SCALE: 1/4" = 1'-0"

PREFINAL

RUSS S. MITAMARA LICENSED PROFESSIONAL ENGINEER NO. 9444-S HAWAII, U.S.A.

LICENSE EXPIRATION DATE: 4/30/12

THIS WORK WAS PREPARED BY ME OR UNDER MY SUPERVISION AND CONSTRUCTION OF THIS PROJECT WILL BE UNDER MY OBSERVATION.

KSF, INC.
615 PIIKOI STREET, SUITE 300
Honolulu, Hawaii 96814

COUNTY OF MAUI
DEPARTMENT OF PUBLIC WORKS
HAIKU, MAKAWAO, MAUI, HAWAII

HAIKU ROAD CULVERT REPLACEMENT
JOB NO. 08-11

SECTIONS

Date: MARCH 2012
Design By: RM
Drawn By: CB
S4-2
SHEET 35 OF 36 SHEETS

03/30/12 1:52:05 PM Z:\00 ONGOING\10-015-HAIKU EMERGANCY REPAIR CULVERT\03-30-12\HRC-S402.DWG

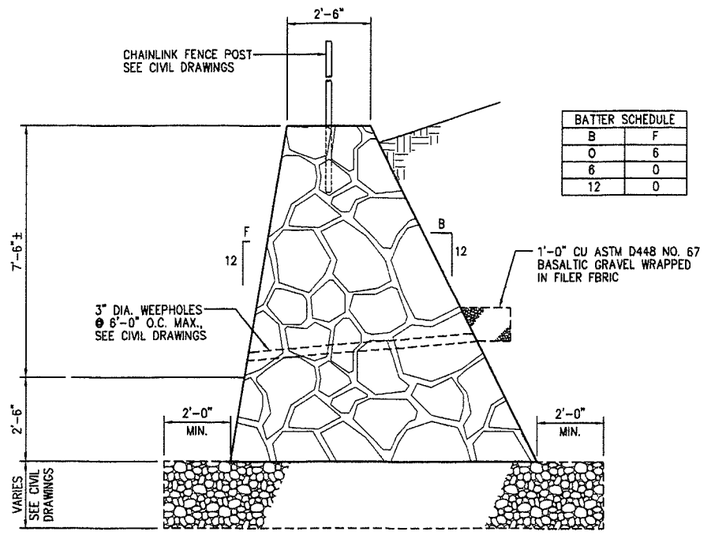

BATTER SCHEDULE	
B	F
0	6
6	0
12	0

A / S4-3 SECTION
SCALE: 1/2" = 1'-0"

PREFINAL

RUSS S. MIYAHARA
LICENSED PROFESSIONAL ENGINEER
NO. 9444-S
HAWAII, U.S.A.

LICENSE EXPIRATION DATE: 4/30/12

THIS WORK WAS PREPARED BY ME OR UNDER MY SUPERVISION AND CONSTRUCTION OF THIS PROJECT WILL BE UNDER MY OBSERVATION.

KSF, INC.
615 PIIKOI STREET, SUITE 300
Honolulu, Hawaii 96814

COUNTY OF MAUI
DEPARTMENT OF PUBLIC WORKS
HAIKU, MAKAWAO, MAUI, HAWAII

HAIKU ROAD CULVERT
REPLACEMENT
JOB NO. 08-11

SECTION

Date: MARCH 2012
Design By: RM
Drawn By: CB
S4-3
SHEET 36
OF 36 SHEETS

03/30/12 1:52:31 PM Z:\00 ONGOING\10-015-HAIKU EMERGANCY REPAIR CULVERT\03-30-12\HRC-S403.DWG

APPENDIX C.

Geotechnical Consultation Report

PRE-FINAL REPORT

GEOTECHNICAL CONSULTATION

PGE Job No. 1875-029

for

SHIMABUKURO, ENDO, YOSHIZAKI, INC.

HAIKU ROAD AND
DRAINAGE IMPROVEMENTS
JOB NO. 08-11
HAIKU, MAUI, HAWAII

February 24, 2012

Submitted by:

Pacific Geotechnical Engineers, Inc.
Soils & Foundation Engineering Consultants
94-417 Akoki Street
Waipahu, Hawaii 96797
(808) 678-8024 Fax: (808) 678-8722
email: pge@pacificgeotechnical.com

Pacific Geotechnical Engineers, Inc.
Soils & Foundation Engineering Consultants

94-417 Akoki Street
Waipahu, Hawaii 96797
Telephone: (808) 678-8024
Facsimile: (808) 678-8722
Email: pge@pacificgeotechnical.com

February 24, 2012
PGE Job No. 1875-029

Shimabukuro, Endo, & Yoshizaki, Inc.
1126 12th Avenue, Suite 309
Honolulu, Hawaii 96816-3715

Attention: Mr. Scott A. Kunioka, P.E.

Subject: Pre-final Report
Geotechnical Consultation
Haiku Road and Drainage
Improvements, Job No. 08-11
Haiku, Maui, Hawaii

Gentlemen:

Submitted herewith are six (6) copies of our pre-final report entitled, "Geotechnical Consultation, Haiku Road and Drainage Improvements, Job No. 08-11, Haiku, Maui, Hawaii". Our services were performed in general accordance with our June 12, 2009 revised proposal. Our initial findings and preliminary recommendations were discussed with you during the course of the work and in an April 11, 2011 draft report. This pre-final report incorporates our responses to your review comments regarding our draft report. We understand the County of Maui did not have any comments regarding our draft report.

This geotechnical consultation has revealed the presence of weak and compressible younger alluvial deposits in the drainage channel where the culvert repairs are planned. Due to the presence of weak and compressible deposits and thick amounts of fill needed to re-build the embankment, potentially large amounts of differential settlement may occur between the repair section and existing culvert and embankment to remain. To reduce the amount of potential differential settlements, supporting the box culvert on deep foundations consisting of drilled, reinforced concrete shafts is recommended.

Soil samples recovered during our field exploration will be stored for a period of two (2) months after the date of our final report. They will be discarded at that time, unless a longer storage period is requested.

It has been a pleasure performing this assignment for you. Please do not hesitate to contact us if you have any questions regarding this report.

Yours very truly,

PACIFIC GEOTECHNICAL ENGINEERS, INC.

Glen Y.F. Lau, P.E.
President

GYL/CI (1875-029 pre-final rpt)
(Six copies submitted)

TABLE OF CONTENTS

Page

SUMMARY 1

1.0 INTRODUCTION 3

2.0 PROJECT CONSIDERATIONS 3

3.0 SCOPE OF SERVICES 4

4.0 SITE CONDITIONS 5

4.1 GENERAL GEOLOGY 5

4.2 SURFACE CONDITIONS 6

4.3 ANTICIPATED SUBSURFACE CONDITIONS 8

5.0 DISCUSSION 9

6.0 RECOMMENDATIONS 13

6.1 PRECONSTRUCTION SURVEY AND MONITORING 13

6.2 SITE PREPARATION 14

6.2.1 General 14
6.2.2 Embankment Repairs 15
6.2.3 Box Culvert and Energy Dissipator Basin 16
6.2.4 Grated Drop Inlet 16

6.3 ANTICIPATED EXCAVATION CONDITIONS 17

6.4 FILL MATERIALS, PLACEMENT, AND COMPACTION 18

6.5 BOX CULVERT AND EMBANKMENT REPAIRS 19

6.5.1 Foundation Support 19
6.5.2 Lateral Shaft Resistance 20
6.5.3 Drilled Shaft Installation 20
6.5.4 Test Shaft Program 22
6.5.5 Shaft Integrity Testing 24
6.5.6 Lateral Earth Pressures and Earth Loads 25
6.5.7 Box Culvert Backfill and Embankment Fill 25

6.6 ENERGY DISSIPATOR BASIN WALL SUPPORT 25

6.7 LATERAL EARTH PRESSURES 26

6.8 WALL BACKFILL AND DRAINAGE 26

6.9 DRAIN PIPE 27

TABLE OF CONTENTS (CONTINUED)

Page

6.10 SITE CLASS 27

7.0 PLANS/SPECS REVIEW AND SERVICES DURING CONSTRUCTION 27

8.0 LIMITATIONS 28

REFERENCES

APPENDIX A – FIELD EXPLORATION

APPENDIX B – LABORATORY TESTING

LIST OF PLATES

PLATE 1 – MAP OF AREA

PLATE 2.1 – PLOT PLAN

PLATE 2.2 – SITE PLAN

PLATE 3.1 – GENERALIZED SUBSURFACE CROSS SECTION A-A'

PLATE 3.2 – GENERALIZED SUBSURFACE CROSS SECTION B-B'

PLATE 3.3 – GENERALIZED SUBSURFACE CROSS SECTION C-C'

PLATE 3.4 – GENERALIZED SUBSURFACE CROSS SECTION D-D'

PLATES 4.1 THROUGH 4.11 – SITE PHOTOGRAPHS

PRE-FINAL REPORT

GEOTECHNICAL CONSULTATION
HAIKU ROAD AND DRAINAGE IMPROVEMENTS
JOB NO. 08-11
HAIKU, MAUI, HAWAII

PGE JOB NO. 1875-029

SUMMARY

Our main geotechnical findings and recommendations include:

1. Subsurface conditions encountered in Boring 1 drilled along Haiku Road from the top of the road embankment generally consisted of about 20 feet of fill underlain by firm saprolite and weathered basalt. Subsurface conditions encountered in Borings 2 and 3 drilled in the existing drainage channel downstream of the damaged culvert section generally consisted of variable amounts of soft and loose younger alluvial deposits with cobbles, boulders, trash, and debris at the surface underlain by firmer alluvium, saprolite, and highly weathered basalt.

2. Potential main geotechnical concerns at the site include:

   - *Presence of weak and compressible younger alluvial deposits where the culvert is to be repaired.* Weak and compressible younger alluvial deposits were encountered in the drainage channel where the culvert repairs are planned. Due to the presence of weak and compressible deposits and thick amounts of fill needed to re-build the embankment, potentially large amounts of differential settlement on the order of a foot or so may develop between the box culvert repair section and existing culvert and embankment to remain. To reduce the amount of potential differential settlements and to provide for more uniform foundation support, it is recommended that the box culvert repair section be founded on deep foundations consisting of drilled, cast-in-place reinforced concrete shafts. It is also recommended that the soft younger alluvial soil be over excavated to firmer alluvial deposits or saprolite, and replaced with properly compacted structural fill to reduce the amount of embankment settlements.

   - *A need to excavate near the base of the existing embankment slope.* Excavating near the base of the existing embankment may need to be done carefully to reduce the potential for undermining the existing culvert and causing potential instability of the existing roadway embankment. Temporary shoring of the existing box culvert may be needed.

   - *Limited space and site access.* Access into the existing drainage channel and space for heavy equipment needed for the repairs is anticipated to be difficult due the narrow road, steep slopes, irregular site terrain, and narrow channel. An existing water main under the west bound lane of Haiku Road and an existing

overhead electrical line may need to be relocated to reduce potential damage to these lines during construction.

- *Potential for channel scour.* The presence of a scour pond at the discharge end of the existing culvert indicates a high potential for scour to develop in the channel. The culvert repairs should include suitable scour protection.

- *Presence of relatively shallow groundwater table.* Excavations needed for the repairs may extend below the groundwater table. It is anticipated that dewatering will likely be needed to properly prepare the subgrade for the embankment and culvert repairs. A temporary diversion or bypass for the culvert should also be provided to keep water out of the excavation during the site and foundation preparation work.

3. A subgrade treatment program and shallow foundations were considered for the repair section of the drainage culvert and new energy dissipator basin. Under this concept, the weak and compressible younger alluvium would be over excavated down to firmer material and replaced with properly compacted structural fill. It is estimated that the repair section in this concept may still experience differential settlements on the order of one inch or so between the remaining culvert section and the repair section due to the relatively large amount of fill needed to re-build the embankment. This amount of differential settlement may result in separation and distress to the existing and/or repair culvert section.

4. To reduce the amount of potential differential settlement between the repair section and existing culvert to remain, supporting the repair section on deep foundations consisting of drilled, reinforced concrete shafts is recommended. The shafts would derive their support primarily through frictional and end bearing resistance in the underlying saprolite and highly weathered basalt. Subgrade treatment, as described in item 3 above, is still recommended to reduce the amount of embankment settlements.

More detailed discussion and recommendations are presented in the main text of this report.

1.0 INTRODUCTION

This report presents the results of the geotechnical consultation services that Pacific Geotechnical Engineers, Inc. (PGE) performed for the Haiku Road and Drainage Improvements project at Haiku, Maui, Hawaii. The approximate location of the site is shown on the Map of Area, Plate 1.

2.0 PROJECT CONSIDERATIONS

This project includes repairing a box culvert drainage system located along Haiku Road in the vicinity of Kokomo Road. PGE understands that an approximately 15-foot long downstream section of a 6.1 feet wide by 6 feet high concrete box culvert broke-off after heavy rains in late 2007 or early 2008. The failure has resulted in the formation of a nearly vertical eroded scarp at the damaged face of the culvert and has undermined the shoulder and several guard rails of Haiku Road.

Based on preliminary drawings provided by Shimabukuro, Endo, & Yoshizaki, Inc. (SEY) on January 31, 2012, PGE understands that the repairs will include a new 6 feet high by 6 feet wide, approximately 37-foot long section of drainage culvert with a 72-foot long energy dissipater basin with grouted rip rap for scour protection at the outlet. The discharge end of the drainage culvert repair section invert will slope down at about a 5 horizontal to one vertical (5H:1V) slope and discharge into the energy dissipator basin. Based on the preliminary drawings, it is estimated that roughly 30 feet or so of fill will need to be placed on the north side of the road to rebuild the roadway embankment over the culvert.

PGE understands that the repairs will include a 12-foot wide lane with a shoulder at least 5-foot wide on the west bound lane. PGE further understands that the repairs will include a grated drop inlet and an 18-inch diameter drain line to collect surface runoff from Haiku Road and discharge into the energy dissipator basin.

A general layout of the existing site is shown on the Plot Plan, Plate 2.1. A plan showing the planned repairs is shown on the Repair Plan, Plate 2.2.

Foundation loads for the new drainage culvert and energy dissipator basin walls were not available at the time of this report.

3.0 SCOPE OF SERVICES

Based on the above considerations, the following scope of services during design was performed:

1. *Review of Readily Available Information* – Readily available information on subsurface and geologic conditions in the vicinity of the site was reviewed. The sources of the review included information in PGE's files, published reports, and other available information on geologic and subsurface conditions. PGE requested record drawings of the existing road and box culvert from the County of Maui (hereafter referred to as "County") through SEY and was informed by the County that no drawings were found in the County's files.

2. *Coordination with SEY, Permit to Work on County Highways, Site Visit, Utility Checking, and Public Notice* – Prior to the start of the field work, PGE coordinated its work with SEY and the County. Readily available utility plans were reviewed to check the boring locations for possible underground utilities. The Hawaii One Call Center (HOCC) was contacted to review the boring locations with regard to underground utilities. As a final check, each boring location was toned using a metal detector prior to drilling.

   PGE also published a legal notice in the *Maui News* to notify the public prior to performing its field exploration work.

3. *Field Exploration* – Subsurface conditions at the site were explored by drilling three (3) soil test borings to depths ranging from 20.3 to 69.4 feet below existing grades. The approximate locations of the borings are shown on the Plot Plan, Plate 2.1. The location and elevation of the borings were estimated based on information provided on the project topographic map by CPS and PGE's field measurements using a surveyor's wheel and 100-foot tape. A drill rig was mobilized from Oahu to Maui to perform the drilling.

   The logs of borings and a more detailed description of the field exploration program are presented in Appendix A of this report.

4. *Laboratory Testing* – Soil samples and rock cores obtained from the borings were shipped to PGE's laboratory on Oahu for further examination and testing. The testing included moisture content and dry density determinations, Atterberg Limits, gradation analyses, consolidation tests, shear strength tests, an Expansion Index (EI) test, a moisture-density relations test, and a single point laboratory California Bearing Ratio (CBR) test.

   A description of the laboratory tests that were performed and the test results are presented in Appendix B of this report.

5. *Engineering Analysis and Report Preparation* – Based on the results of the information review, and field and laboratory testing, engineering analysis was performed and feedback and recommendations were developed regarding:

   a. Site preparation,
   b. Anticipated excavation conditions,
   c. Fill materials, placement, and compaction,
   d. Foundation support for box culvert and energy dissipator basin walls, including parameters for foundation design,
   e. Lateral earth pressures,
   f. Lateral resistance,
   g. Drilled shaft installation and testing,
   h. Site class, and
   i. Culvert and wall backfill materials, placement, and compaction.

   The results of this geotechnical consultation complete with field and laboratory test data are presented in this report.

   Please note that assessing scour potential was not part of PGE's scope of services.

   PGE's findings and preliminary recommendations were discussed with SEY during the course of the design through e-mails, telephone conversations, coordination meetings on December 8, 2010 and July 5, 2011 with SEY and KSF Engineers, Inc., the project structural engineer, and a April 11, 2011 draft report.

4.0 SITE CONDITIONS

4.1 GENERAL GEOLOGY

According to geologic maps of Maui by Stearns and Macdonald (1942) and Sherrod and others (2007), the rocks on the lower northern slopes of the Haleakala volcanic shield are part of the Kula Volcanic Series. Lava flows of the Kula Volcanic Series predominantly consist of basaltic a'a and have an average thickness of 20 feet (Macdonald and others, 1983). The surface of the lava flows are largely blanketed by volcanic ash derived from cinder cones along a north-northwestward trending rift zone of Haleakala. The upper portion of the lava flows have weathered to a silty and clayey soil. Numerous streams flowing seaward over the northern slopes of the volcanic shield have created a topography marked by steep-sided gulches separated by gently undulating plains of the near-original shield surface. Outcrops of weathered basalt are exposed along the steeper walls of the gulches.

The site is located in Lilikoi Gulch, which forms a northward trending, steep, though relatively shallow, V-shaped channel. The areas above the walls of this gulch, to the east and

west, form plateau-like surfaces consisting of highly to completely weathered volcanic ash underlain by basaltic lava flows that have weathered to a soft to very soft rock, termed saprolite. On the western side of the site, saprolite is exposed in road cuts, and the volcanic ash is overlain by fill composed of silty soil with fragments of saprolite. The floor of the gulch is covered with alluvium derived from weathered basalt and volcanic ash.

Based on soil maps published by the United States Department of Agriculture, Natural Resources Conservation Service (NRCS), the land and soil types at the site have been mapped as rough broken land (rRR), Haiku clay, 3 to 7 percent slopes, (HbB), and Haiku clay, 7 to 15 percent slopes, (HbC). According to the NRCS, rRR occurs on very steep land in gulches and on mountain sides and consists of soft soil, including colluvium and alluvium, underlain by weathered rock. According to the NRCS, HbB and HbC soils developed in material weathered from basic igneous rock.

4.2 SURFACE CONDITIONS

The ground surface at the site is relatively level to slightly sloping at Haiku Road with a steep, eroded slope extending from the edge of the road, down and across the outlet of a damaged concrete box culvert, to the drainage channel floor. The existing site surface conditions are indicated on the project topographic map presented on Plate 2.1. A scour pond and a narrow channel bounded by low, alluvial terraces were observed at the base and downstream sections of the remaining culvert. Based on a topographic map received from SEY on January 7, 2010, ground surface elevations range from approximately +490 feet on Haiku Road to +450 feet on the floor of the scour pond. All elevations in this report are referenced to Mean Sea Level datum.

The site is located along a low section of Haiku Road where the road crosses Haiku Stream. The upstream side of the road generally consists of a narrow shoulder that slopes downward to the channel floor and is bordered by a wood fence, palm and other trees, and overgrown landscape plants. The downstream side of the road generally consists of a very narrow shoulder, a guardrail, palm trees, recently trimmed vegetation, reflective traffic posts, and a low, asphaltic concrete (AC) berm along the downslope edge of the road pavement (see Plot Plan, Plate 2.1, and Photos 1 and 2 on Plate 4.1, and Photo 3 on Plate 4.2). The approximate location of an existing 6-inch water line relative to Boring 1 based on blue paint markings on the

pavement by the County Department of Water and the eroded slope is shown on Photo 4 on Plate 4.2. A shallow excavation along the south edge of the road revealed approximately 4.5 inches of AC pavement underlain by approximately 6 inches of silty, coarse basaltic gravel that may be Macadam (see Photo 5 on Plate 4.3). The bottom portion of two (2) guardrail posts at the top of the slope was exposed and undermined (see Photo 6 on Plate 4.3). An overhead utility line oriented in an east to west direction crosses the drainage channel. A palm tree that may have been rooted into the slope lies at the foot of the embankment on the gulch floor in the vicinity of Borings 2 and 3, along with the damaged section of the concrete box culvert (see Photo 7 on Plate 4.4).

Fill was observed in the eroded slope directly over the concrete box culvert. The fill was generally composed of elastic silt with basaltic gravel and cobbles (see Photo 8 on Plate 4.4). The edge of the concrete box culvert was broken and irregular. Portions of the surface of the concrete exhibited spalling. An exposed roughly one-inch square rusted rebar extended outward and downward from the bottom of the concrete box culvert (see Photo 9 on Plate 4.5). The northern portion of the concrete box culvert appeared to be directly underlain by a thin layer of fill. This fill material appeared to be underlain by highly weathered basaltic rock (see Photo 10 on Plate 4.5 and Photo 11 on Plate 4.6).

The sidewalls of the channel below the remaining concrete box culvert were nearly vertical and appeared to have been previously excavated. Exposed surface soils on the sidewalls generally consisted of highly to completely weathered coarse basaltic sand on the east side and elastic silt with highly weathered basaltic gravel, cobbles, and boulders on the west side (see Photo 12 on Plate 4.6 and Photo 13 on Plate 4.7). The basaltic sand appeared to be older alluvium composed of reworked, weathered volcanic ash (see Photo 14 on Plate 4.7). The elastic silt appeared to be fill material with predominantly subangular to angular basaltic gravel, cobbles, and boulders (see Photo 15 on Plate 4.8).

The floor of the channel near the concrete box culvert outlet was covered with basaltic gravel, cobbles, and various debris, including tree branches and trunks, an old bicycle, car parts, PVC pipes, concrete fragments, and trash (see Photo 16 on Plate 4.8). A broken-off section of the concrete box culvert was observed on the east side of the channel and it had an approximately ¼-inch wide crack along its length (see Photos 17 and 18 on Plate 4.9).

A scour pond was observed at the foot of the eroded embankment. About one to 1.5 feet of standing water above an approximately one-foot thick layer of basaltic sand and gravel was present in the pond at the time of the field exploration (see Photo 19 on Plate 4.10). The sand and gravel in the scour pond appeared to be underlain by weathered basaltic rock.

Except for the scour pond, the stream bed at the site was dry during the drilling and soil sampling period of the field work. During the demobilization of the drill rig from the floor of the gulch, irrigation water roughly one to 1.5-feet deep within the concrete box culvert flowed out of the culvert and over the floor of the channel (see Photo 20 on Plate 4.10 and Photo 21 on Plate 4.11).

4.3 ANTICIPATED SUBSURFACE CONDITIONS

Subsurface conditions encountered at the site are illustrated on the Log of Borings presented on Plates A-1.1.1 through A-1.3 in Appendix A. Anticipated subsurface conditions based on available subsurface information are illustrated on the Generalized Subsurface Cross Sections A-A' through D-D' presented on Plates 3.1 through 3.4. The approximate locations of the borings and sections are shown on Plate 2.1.

Because the borings are widely spaced and have been projected to the section locations, the actual field occurrence of the geologic units and subsurface and groundwater conditions may differ from those indicated on the sections. Because of the projection of borings to the section locations, the elevations of the top of the borings may not coincide with the ground surface indicated on the sections.

Subsurface conditions encountered in Boring 1 located on Haiku Road generally consisted of approximately 6.5 inches of AC and about 10 to 12 inches of coarse basaltic gravel (possible Macadam) at the surface underlain by fill to a depth of about 20 feet below existing grade. The fill generally consisted of medium stiff to stiff elastic silt with weathered basaltic gravel.

The fill was underlain by stiff to hard silt (completely weathered basaltic rock or saprolite) to approximately 39 feet. The saprolite was underlain by medium stiff elastic silt (completely weathered clinker) to 43 feet, and further underlain by hard elastic silt (saprolite) to 62 feet. Stiff to hard elastic silt (completely weathered clinker) was encountered below the

saprolite to 66 feet followed by hard elastic silt (saprolite) to 68 feet. Soft, highly to completely weathered basalt was encountered below the saprolite to the bottom of this boring at approximately 69.4 feet below the road surface.

Subsurface conditions encountered in Borings 2 and 3 located in the drainage channel generally consisted of soft sandy silt and loose gravel (younger alluvium) with cobbles, boulders, trash, and debris at the surface to a depth of about 6 feet in these borings. A layer of basaltic gravel with cobbles was encountered in these borings below the silt to depths of about 9 to 10 feet.

The alluvium in these holes was underlain by stiff to hard silt (saprolite) to a depth of approximately 17 feet. The saprolite was underlain by soft, highly weathered basalt to the maximum depth explored in Boring 3 at 20.6 feet.

Ground water was observed in Boring 1 at a depth of 33.5 feet, in Boring 2 at a depth of 4.5 feet, and in Boring 3 at a depth of 5.4 feet. These depths correspond to elevations of +456.5 feet, +451.5 feet, and +452.6 feet, respectively. It is anticipated that groundwater levels may fluctuate due to changes in levels in the channel upstream of the road and rainfall at the site.

5.0 DISCUSSION

This geotechnical consultation revealed the presence of highly variable subsurface conditions at the site. The locations of test borings drilled for this project are shown on the Plot Plan, Plate 2.1 and Repair Plan, Plate 2.2. Subsurface conditions encountered in Boring 1 drilled from the top of the Haiku Road embankment generally consisted of about 20 feet of fill underlain by firm saprolite. Subsurface conditions encountered in Borings 2 and 3 drilled in the existing drainage channel downstream of the damaged culvert section generally consisted of variable amounts of soft and loose alluvial silt deposits with cobbles, boulders, trash, and debris to a depth of about 6 feet underlain by a layer of gravel with cobbles and further underlain by firm saprolite, and highly weathered basalt at deeper depths.

Consolidation tests indicate that the weak and compressible alluvial silt deposits encountered in Borings 2 and 3 may be overconsolidated. However, blow counts taken during the soil sampling and shear strength testing performed on this material indicates soft conditions and low shear strength. This material is not suitable for foundation and embankment support.

Based on a review of readily available subsurface information, and the results of the geotechnical consultation described herein, the following potential main geotechnical concerns are anticipated for this project:

- *Presence of weak and compressible younger alluvial deposits where the culvert is to be repaired.* Weak and compressible younger alluvial deposits were encountered in Borings 2 and 3 drilled in the drainage channel where the culvert repairs are planned. Due to the presence of weak and compressible deposits and thick amounts of fill needed to re-build the embankment, potentially large amounts of differential settlement on the order of a foot or more may develop between the repair section and existing culvert and embankment to remain. To reduce the amount of potential differential settlements and to provide for more uniform foundation support, it is recommended that the box culvert repair section be founded on deep foundations consisting of drilled, cast-in-place reinforced concrete shafts. It is also recommended that the soft younger alluvial soil be over excavated to at least the alluvial gravel layer encountered at a depth of about 6 feet in these borings which corresponds to about Elevation +450 feet, and replaced with properly compacted structural fill to reduce the amount of embankment settlements.

- *A need to excavate near the base of the existing embankment slope.* As discussed above, it is recommended that weak and compressible younger alluvium be over excavated. Soft deposits were also encountered in a scour pond at the base of the existing embankment. The over excavation work in this channel will need to be done carefully to reduce the potential for undermining the existing culvert and causing potential instability in the existing roadway embankment. Temporary shoring of the existing box culvert may be needed.

- *Limited space and site access.* Haiku Road is a two lane road with little to no shoulders. The road may need to be closed during the construction. Access into the existing drainage channel and space for heavy equipment needed for the repairs is anticipated to be difficult due to the steep slopes, irregular site terrain, and narrow channel. An existing water main under the west bound lane of Haiku Road and an existing overhead electrical line may need to be relocated to reduce potential damage to these lines during construction. If the water line leaks during or after the construction, it may cause instability and erosion of the roadway embankment.

- *Potential for channel scour.* The presence of a scour pond at the discharge end of the existing culvert indicates a high potential for scour to develop in the channel. Scour and undermining probably contributed to the failure of the existing culvert. The culvert repairs should include suitable scour protection.

- *Presence of relatively shallow groundwater table.* Excavations needed for the repairs may extend below the groundwater table. It is anticipated that dewatering will likely be needed to properly prepare the subgrade for the embankment and culvert repairs. A temporary diversion or bypass should also be provided to keep water out of the excavation.

It is estimated that up to roughly 30 feet or so of fill will need to be placed to re-build the embankment slope. Potentially large amounts of differential settlement on the order of a foot or more may develop between the new box culvert and the existing box culvert and in the new fill if the embankment and repair section are founded directly on the weak and compressible younger alluvial silt deposits.

Supporting the box culvert repair section on structural fill after performing the subgrade treatment as recommended herein was considered. It is estimated that settlement of the box culvert repair section after subgrade treatment may still be on the order of one inch or so between the remaining culvert section and the repair section due to the relatively large amount of fill needed to re-build the embankment. Based on discussions with SEY's structural engineer, PGE understands that this amount of settlement may result in cracking, separation, and distress to the new box culvert especially where it connects to the existing box culvert.

Using only deep foundation support without subgrade treatment for the new box culvert was considered. Because of the roughly 30-feet or so of fill needed to be placed to re-build the embankment slope, potentially one foot or more of settlement may occur in the portions of the fill outside of the new culvert footprint. This amount of settlement may potentially result in distress to the new road to be built on the repaired embankment slope, potential voids below the new box culvert, and potentially large down drag loads on the culvert repair section foundations. Based on these potential geotechnical concerns, it is recommended that the subgrade treatment recommended herein be performed along with supporting the new box culvert on deep foundations.

Deep foundation support, such as driven precast/prestressed concrete displacement piles and drilled and grouted micropiles, were initially considered. Because of the difficult site access, steep terrain, and narrow channel, installing driven piles may not be feasible. Micropiles may be possible, but may not provide sufficient lateral resistance due to their small diameters. Based on these considerations, it is recommended that drilled, cast-in-place reinforced concrete shafts be used to support the new box culvert. The shafts would derive their support from frictional and end bearing resistance in the saprolite and highly weathered basalt encountered at the site. More detailed recommendations regarding drilled, cast-in-place reinforced concrete shafts are presented in subsection 6.5 of this report.

As previously discussed, the over excavation performed at the toe of the existing embankment slope will need to be carefully performed to reduce the potential for undermining and distress to the existing culvert. Slope stability analysis was performed to check on stability of the existing embankment after the over excavation has been performed. The analysis was performed using the computer program SLOPE/W 2007 by GEO-SLOPE International Ltd. PGE's analysis indicates the slope should be stable after the over excavation has been performed provided the excavation does not undermine the existing culvert and does not remain open for extended periods of time. To reduce undermining of the existing culvert, the over excavation limits should not extend beyond the near vertical slope face of the existing embankment. Please note that the Contractor should be cautioned that inclement weather, staging of heavy equipment on the road, and other factors may affect the stability of the embankment. The Contractor should perform the excavation, backfilling, and construction in a manner to not undercut the toe of the embankment slope or undermine the existing culvert, and to backfill the excavation as soon as possible.

Slope stability analysis was also performed to check on the embankment repair section. The embankment repair was assumed to have a permanent 1.5 horizontal to one vertical (1.5H:1V) slope. A 2H:1V slope is preferred, but PGE understands based on discussions with SEY that due to space limitations, a 1.5H:1V slope or steeper is desired. If a slope steeper than 1.5H:1V is utilized, a reinforced soil slope or taller culvert walls may be needed. It is recommended that PGE be retained and consulted if a reinforced soil slope is to be utilized. Please note that installing a reinforced soil slope may require excavating into the existing road embankment, depending on the length of geogrid that are required.

According to the U.S. Geological Survey (USGS) seismic hazard map for Maui (AASHTO Load Resistance Factor Design [LRFD] Bridge Design Specifications, 2010, 5th Edition), the PGA is about 0.28g for Haiku, Maui. A site correction factor, F_{PGA}, of 1.24, for Site Class D was applied to the PGA of 0.28g to obtain a corrected PGA of 0.35g. For seismic slope stability analysis, a modified PGA of 0.15g was used based on a ductility factor of 0.5 and assuming that permanent displacement in the embankment on the order of one to 2 inches is acceptable for earthquake conditions.

Under static conditions, a minimum factor of safety of about 2 was calculated for the repair section with a 1.5H:1V slope. Under earthquake conditions, using an assumed peak

ground acceleration (PGA) of 0.15g, the calculated factor of safety was about 1.5. These factors of safety are considered sufficient for the planned embankment repairs.

More detailed discussions and recommendations are presented in the following report sections.

6.0 RECOMMENDATIONS

6.1 PRECONSTRUCTION SURVEY AND MONITORING

1. Prior to the start of construction, it is recommended that a photographic and video survey be made of existing structures to remain, such as pavements, on-grade slabs, a house at 900 Haiku Road, and other structures within about 150 feet of the existing drainage culvert to document their existing condition. Any existing distress or deteriorated conditions should be noted and documented.

2. The photographic and video survey should include establishing monitoring points on existing structures to remain, such as pavement, waterline, on-grade slabs, houses, and other structures to remain within 150 feet of the culvert repairs to measure vertical and horizontal movements. All monitoring points should be referenced to a stable bench mark located at least 300 feet from the culvert so as not to be affected by the construction. For the existing house at 900 Haiku Road, it is recommended that points be established on at least each corner of this house.

3. The monitoring points should be surveyed at least one month prior to the start of any construction operations at the site to establish a baseline reading. The readings should include both elevations and position. During construction, the monitoring points should be surveyed at least once a week during drilled shaft installation, excavation and dewatering operations, and embankment reconstruction. More frequent surveys should be performed if movements are observed during the construction. The survey should be performed by a surveyor licensed in Hawaii.

   The Contractor should evaluate the data after it is obtained. If more than approximately ¼-inch of vertical or horizontal movement is detected or if distress is observed in the existing house, structures, walls, pavements, slabs, utilities, and other structures to remain, the Contractor should immediately modify their construction means and methods to reduce the amount of additional settlement, movements, and distress.

4. A final survey of the monitoring points should be performed no sooner than one month after substantial completion of construction. In addition to the final survey, a post-construction photographic and video survey similar to the pre-construction survey should be conducted.

5. The County should be provided with copies of the photographs, videos, settlement data, and a plan showing the locations of the photographs, videos, and settlement points. The information would provide records in the event movements and claims for damages arise during the construction. It should also help to alert the Contractor of a need to modify their construction methods should settlement, movements, and distress be detected.

6. In addition to the survey monitoring points, at least one slope inclinometer should be installed within the existing road at the top of the embankment slope to a depth of at least 60 feet below existing grade. An approximate recommended location of the inclinometer is shown on the Site Plan, Plate 2.2. The top of the casing should be surveyed to obtain baseline readings of location and elevation. The top of the casing should be surveyed before the start of construction and weekly during the embankment and channel excavation and backfilling operations, and culvert repairs to determine its elevation and coordinates. During the construction, the inclinometer should be measured at the same time as the survey monitoring points and as the top of casing is surveyed.

7. The inclinometer should be installed by a specialty contractor that has successfully installed inclinometers for at least 3 years in similar deposits. The inclinometer personnel should have at least 3 years experience in installing casing, performing the testing, and collecting and analyzing the data.

6.2 SITE PREPARATION

6.2.1 General

1. Prior to grading, the areas of the proposed construction should be prepared by stripping and grubbing the top at least six (6) inches of soil containing vegetation, roots, organic matter, and debris. Grubbing to deeper depths may be needed where roots extend to deeper depths. Care should be taken when stripping and grubbing along the existing slope to prevent undermining of the existing road, culvert, and water line. The stripped and grubbed material should be disposed of at a suitable off-site disposal site.

2. Existing trees within the grading limits should be completely removed and/or relocated. The roots and stumps of these trees should be completely grubbed and removed, and the resulting excavations backfilled with properly compacted fill material conforming to the requirements outlined herein.

3. Existing underground utility lines within the grading limits that may interfere with the proposed construction should be removed and relocated if still in use. The remaining portions of any underground lines that are left in-place should be properly cut and filled with grout, or removed to reduce the potential for seepage paths in the embankment. The existing 6-inch water line may get disturbed due to embankment construction and may need to be relocated.

4. It is anticipated that a temporary bypass will likely be needed to divert water in the channel and upstream reservoir away from the work area during construction.

6.2.2 Embankment Repairs

1. After stripping and grubbing of the existing embankment slope, the subgrade moisture content beneath areas to receive fill should be checked before compacting. If the moisture content higher than the optimum moisture content for this material, the subgrade should be compacted to a relative compaction of at least 90 percent. If the moisture content is on the dry side of the optimum moisture content, then the subgrade should be scarified to a depth of at least six (6) inches, thoroughly moisture conditioned wet of the optimum moisture content for this material, and compacted to a relative compaction of at least 90 percent.

   Relative compaction in this report is defined as the dry density of the compacted material expressed as a percentage of the maximum dry density of the same material based on American Society for Testing and Materials (ASTM) D 1557 test method.

2. Any soft or yielding zones detected during the subgrade compaction should be treated by removing the soft and loose materials to firm soils and replacing them with properly compacted structural fill.

3. Permanent cut and fill slopes should not be steeper than 1.5H:1V.

4. All fills placed on slopes steeper than 5H:1V should be continuously keyed and benched into the hillside. A bench height of not more than 4 feet and width of not more than 2 feet is recommended. Benching of the hillside below the existing box culvert is not needed.

5. All fill slopes should be overbuilt and trimmed back to expose firm, compacted material at the finish grade or the slope face should be compacted to a firm consistency.

6. All permanent cut and fill slopes in soil materials should be vegetated as soon as practical to reduce overall erosion rates.

7. The Contractor should retain qualified and experienced registered geotechnical and structural engineers with at least 10 years of registered experience and at least 8 years of registered experience in responsible charge to design all temporary cut slopes, including any associated temporary support systems. Responsible charge is defined as being in direct control or has personal supervision of geotechnical or structural engineering work.

8. Please note that the recommendations presented herein may need to be modified if a reinforced soil slope is utilized. PGE should be retained and consulted if the repairs are to include a reinforced soil slope.

6.2.3 Box Culvert and Energy Dissipator Basin

1. After stripping and grubbing the surface vegetation and prior to filling, the subgrade for the new box culvert and energy dissipator basin should be prepared by uniformly over excavating to at least Elevation +450 feet to remove the soft younger alluvial sandy silt down to dense silty alluvial gravel and/or firm saprolite material. The over excavation should encompass the area to be filled and extend at least 5 feet beyond the box culvert repair section and energy dissipator basin limits but not less than the limits of the existing channel. The bottom of the over excavation, including the scour pond, should be cleaned of soft and loose material down to firm material.

   It is anticipated that the bottom of the over excavation to Elevation +450 feet may be at or below the ground water table. Ground water was encountered in Borings 1, 2, and 3 at Elevations +456.5 feet, +451.5 feet, and +452.6 feet, respectively. Dewatering of the excavation will probably be needed to properly clean and prepare the bottom of the excavation.

2. After proper cleaning, the bottom of the excavation below the ground water table should be lined with woven geotextile, such as Mirafi HP370 or equal. The over excavation should be backfilled with clean, granular basaltic gravel conforming to the gradation requirements of ASTM D 448, No. 5 size to at least one foot above the water table. The basaltic gravel should be completely wrapped in the geotextile fabric by placing a second layer of fabric over the gravel. The fabric should overlap at least 24 inches along all joints.

3. The basaltic gravel should be placed in horizontal lifts not exceeding 12 inches in loose thickness and compacted with suitable compaction equipment to a dense consistency as indicated by little to no settlement of the gravel under repeated passes, but not less than six (6) passes per lift.

4. The remainder of the excavation should be backfilled with properly compacted structural fill placed and compacted as recommended in subsection 6.4 of this report.

5. The over excavation and backfilling should be checked for suitable bearing materials and proper compaction under the observation of a qualified and experienced geotechnical engineer. It is recommended that PGE be retained to perform this checking.

6.2.4 Grated Drop Inlet

1. After stripping and grubbing the surface vegetation and prior to filling, the subgrade for the grated drop inlet should be prepared by uniformly over excavating at least 12 inches below the planned invert. The over excavation should extend at least 12 inches beyond the grated drop inlet limits.

2. The subgrade for the grated drop inlet should be prepared as recommended in Items 1 and 2 of subsection 6.2.2 of this report.

3. The over excavated material should be replaced with properly compacted structural fill placed and compacted as recommended in subsection 6.4 of this report.

4. The over excavation and backfilling should be checked for suitable bearing materials and proper compaction under the observation of a qualified and experienced geotechnical engineer. It is recommended that PGE be retained to perform this checking.

5. The inlet should be backfilled with granular, free draining, non-expansive structural backfill. The fill should be placed in not more than 6-inch thick loose lifts, moisture conditioned to within 2 percent of optimum moisture content for this material, and compacted to a relative compaction of at least 90 percent.

6.3 ANTICIPATED EXCAVATION CONDITIONS

1. All excavations and dewatering that may be required including temporary excavation slopes, trenches, and pits are the Contractor's responsibility. All construction excavations and dewatering should be performed and supported in accordance with applicable County, State and Federal safety regulations, including current OSHA excavation and trench safety standards. The Contractor should retain qualified and experienced registered structural and geotechnical engineers to design the excavation support and dewatering systems.

2. Excavation to the depths required for the subgrade preparation recommended herein may encounter sandy silt, saprolite, completely weathered clinker, alluvium, hard basaltic cobbles, possible hard basaltic boulders, trash, concrete, and miscellaneous debris. It is anticipated that these materials can generally be excavated with conventional earthwork equipment, with the exception of concrete debris, hard basaltic boulders, and basaltic rock. Excavations that extend into slightly jointed, hard, and relatively intact rock, and hard basaltic boulders are anticipated to be difficult and will likely require a large backhoe equipped with a hydraulic hoe ram attachment or other suitable excavation equipment.

3. Ground water was encountered in the borings at the time of PGE's field exploration. It is recommended that the Contractor have sump pumps or other suitable dewatering equipment readily available at the site to remove any surface and/or groundwater that may enter the excavation. All pumped water from any construction dewatering operations that are performed should be filtered and treated to conform to applicable City, State, and Federal regulations before being discharged.

6.4 FILL MATERIALS, PLACEMENT, AND COMPACTION

1. On-site materials encountered in the borings classified as MH and ML according to the Unified Soil Classification System (USCS) and ASTM D 2487 are not suitable for use as structural fill. These materials may be stockpiled for possible re-use as general fill for the embankment repairs, non-structural or landscape areas or capping fill in non-paved areas provided it meets the property requirements recommended below in item 4. Otherwise, it should be disposed of at a suitable off-site disposal area. Other unsuitable soils are materials classified as CH, CL, GC, SC, PT, OL, and OH according to the USCS and ASTM D 2487.

2. Structural fill and structural backfill should consist of granular, generally well-graded material, with particles ranging from coarse to fine and classified as GW, GW-GM, GP-GM, SW, SW-SM, or SP-SM according to the USCS. Materials classified as GM or SM may be used as structural fill if it has a plasticity index of zero. Structural fill and structural backfill should consist of a granular soil/rock mixture free of organic matter, vegetation, trash, concrete, old pavements, clayey soils, debris, and particles larger than three (3) inches in maximum dimension. It should contain less than 15 percent fines passing the U.S. No. 200 standard sieve. It should also have a CBR value of at least 30, a CBR swell of less than one percent when compacted at optimum moisture content and after 4 days of soaking, a liquid limit of 25 percent or less, and a plasticity index of 10 or less.

3. Structural fill should be placed in not more than 8-inch thick horizontal, loose lifts, moisture conditioned to within 2 percent of the optimum moisture content for this material, and compacted to a relative compaction of at least 95 percent.

4. General fill materials for the embankment repairs, non-structural, and landscape areas should be free of organic matter, debris, trash, concrete, old pavements, and particles larger than three (3) inches in maximum dimension. It should have a CBR swell of less than 2 percent when compacted at optimum moisture content and after 4 days of soaking, and a CBR value of at least 10.

5. General fill should be placed in not more than 10-inch thick loose lifts, thoroughly moisture conditioned to between optimum and 3 percent wet of optimum moisture content, and compacted to a relative compaction of at least 90 percent.

6. Low permeability fill for wall backfill of the energy dissipator basin should consist of a fine grain soil, such as ML, free of organic matter, debris, and particles greater than 2 inches in maximum dimension. It should have a coefficient of permeability of 10^{-6} cm/sec or less, a CBR value of at least 10, and a CBR swell of less than one percent when compacted at optimum moisture content and after 4 days of soaking.

   Low permeability fill should be placed in not more than 6-inch thick loose lifts, moisture conditioned to between optimum moisture content and 3 percent wet of its optimum moisture content, and compacted to a relative compaction of at least 90 percent.

Controlled Low Strength Material (CLSM) is acceptable for use as low permeability fill. If CLSM is used, it should conform to the requirements of Section 314 of the State of Hawaii Department of Transportation 2005 Standard Specifications for Road and Bridge Construction. It should have a minimum unconfined compressive strength of 150 pounds per square inch (psi) and should be able to be excavated with conventional earthwork equipment. It should contain admixtures to reduce the amount of shrinkage.

CLSM should be placed in lifts. Each lift should be allowed to initially set-up before placing subsequent lifts to reduce potentially overstressing the walls. Lift thicknesses of the CLSM should be determined by the project structural engineer based on their design requirements for the walls.

7. All on-site and imported materials should be checked and, if appropriate, tested and approved by a qualified and experienced registered geotechnical engineer prior to their use in fills at the site. An adequate number of field density tests should be performed to check that the required degree of compaction has been achieved. It recommended that PGE be retained to perform this checking and testing.

6.5 BOX CULVERT AND EMBANKMENT REPAIRS

6.5.1 Foundation Support

1. To provide more uniform support and reduce the amount of differential settlements, it is recommended that the box culvert repair section be supported on deep foundations consisting of 24-inch diameter drilled, cast-in-place reinforced concrete shafts embedded to sufficient depths in the underlying saprolite and weathered basalt.

2. The shaft analysis was based on a 24-inch shaft with a minimum tip elevation of +420 feet. The results of PGE's analysis presented herein were based on guidelines presented in AASHTO LRFD Bridge Design Specifications, 5th Edition, dated 2010. Please note that the vertical and lateral capacities recommended herein do not account for scour. Should scour be anticipated, the shaft embedment depths may need to be increased to account for loss of support due to scour.

   Qn = estimated nominal resistance = 600 kips per shaft

   Strength Limit
   φ = average resistance factor = 0.5 (From LRFD Table 10.5.5.2.3-1 for Skin Friction and End Bearing)
   Qr = factored resistance = Qn * φ = 600 kips * 0.5 = 300 kips = 150 tons

Extreme Event I
φ = resistance factor = 1.0
Qr = factored resistance = Qn * φ = 600 kips * 1.0 = 600 kips = 300 tons

The above nominal resistance and minimum tip elevation may need to be revised based on anticipated load requirements for the drilled shafts.

3. A shaft center-to-center shaft spacing of at least 6 feet should be provided for 24-inch diameter drilled shafts. The shafts should be tied together with caps and grade beams.

6.5.2 Lateral Shaft Resistance

1. The lateral resistance of a 24-inch diameter drilled shaft assuming an applied lateral load of 15 kips was analyzed using the computer program LPILE® version 6 by Ensoft, Inc. This program estimates the response of laterally loaded piles in non-linear soils using p-y curves. A summary of the lateral shaft analysis is presented below.

Shaft Diameter (inch)	Shaft Length Below Bottom of Pile Cap (feet)	Axial Load (kips)	Applied Lateral Load (kips)	Calculated Maximum Shaft Bending Moment (foot-lbs)	Estimated Depth of Maximum Bending Moment Below Shaft Top (feet)	Calculated Shaft Top Deflection (inch)	Estimated Depth of Shaft Fixity Below Shaft Top (feet)
24	30	300	15	84,720	8	0.25	15

The project structural engineer should review the above results with regard to the shaft design. PGE should be retained and consulted if the applied lateral load will vary from what was assumed in PGE's lateral shaft analysis.

6.5.3 Drilled Shaft Installation

1. The shaft drill rig should be capable of drilling through stiff to hard clayey and silty soils, hard basaltic cobbles and hard basaltic boulders, medium hard to hard basaltic rock, and other subsurface conditions as indicated on the boring logs. The Contractor should have suitable drilling bits, core barrels with carbide and/or diamond bit, augers, rock augers, down the hole hammers, rock drills, and other suitable equipment with sufficient downward thrust and torque to drill into subsurface materials anticipated at this site and to a depth of at least 70 feet below the bottom of the drainage channel. The Contractor's equipment and methods should be selected to minimize ground vibrations, vibration induced settlements and movements, cave-ins and over-cuts, and potential settlement and damage to existing underground structures and utilities to remain.

2. All drilled shaft excavations and construction should be monitored on a full-time and continuous basis at the site by a qualified and experienced geotechnical engineer who should maintain a record of each shaft with at least the following information:

   - Drilled shaft number and location,
   - Date and time of beginning and ending of drilling,
   - Ground surface elevation,
   - Drill rig and drilling equipment and bits used,
   - Shaft diameter,
   - Casing diameter (inside and outside),
   - Top and bottom elevation of casing,
   - Subsurface conditions encountered during the drilling,
   - Drilling rate per foot,
   - Drilling plumbness,
   - Groundwater depth and elevation and time of reading,
   - Date and time of beginning and ending of concreting,
   - Concrete slump and strength at the time of placement,
   - Top and bottom elevation of concrete,
   - Theoretical volume of concrete versus depth or embedment for the shaft,
   - Actual volume of concrete used versus depth or embedment in the shaft, and
   - Unusual occurrences.

3. The bottom of each shaft should be cleaned before installing the steel reinforcement and pouring the concrete. After each shaft has been drilled to its final depth, the drilling Contractor should use appropriate cleaning buckets and/or drilling tools to remove any soft or loose material at the bottom of the shaft. The excavation bottom should be relatively flat with not more than one inch of soft or loose material above the final drilled depth.

4. The shafts should be reinforced over their entire lengths. Rebar cages should be fabricated prior to placement in the drilled holes. Centralizers should be attached to the cages to keep them in the central portion of the holes during concrete placement. The centralizers should be placed at the top and bottom of the cages, and every 10 feet along the shaft length.

5. The concrete for the shafts should have a slump of 7 inches, plus or minus one inch at the time of concrete placement.

6. The concrete should be placed by tremie methods using a tremie pipe starting from the bottom of the hole and working upward. Dewatering inside the casing prior to concrete placement will generally not be required. However, the tremie pipe should be kept at least 5 feet below the top of the concrete during the pour to reduce the potential for concrete separation and contamination.

The concrete should not be allowed to hit the rebar cage or sidewalls of the hole during placement. The steel casings should be extracted as concrete is being placed or at the end of the concrete placement depending on the Contractor's operation. Extraction of casings should be done carefully to avoid contamination of the concrete. Care should be exercised to avoid introducing air bubbles in the concrete when disconnecting tremie pipes.

7. The Contractor should construct every other shaft in the layout before constructing the in-between shafts. The concrete for the drilled shaft should set-up at least overnight prior to constructing the adjacent drilled shaft. As much as practical, the shafts should be poured on the same day that they are drilled. Reaming of the shaft hole should be performed if a shaft is not poured within 48 hours of drilling.

8. To evaluate the structural integrity of shafts, non-destructive testing such as crosshole sonic log (CSL) testing and low strain impact (LSI) integrity testing should be performed on select test and production shafts during construction as recommended in subsection 6.5.5.

9. The shaft drilling and construction should be observed and monitored on a full-time basis at the site by a registered geotechnical engineer with at least 10 years of registered experience in geotechnical engineering design and drilled shaft design and construction and at least 8 years of registered experience in responsible charge. It is recommended that PGE be retained to observe and check on the shaft installations and to review the shaft integrity test results.

6.5.4 Test Shaft Program

1. Prior to constructing the production shafts, a test shaft program should be performed to check on the suitability of the Contractor's proposed equipment and construction method for drilled shaft installation and to develop a better understanding of shaft behavior under loading. The test program should consist of drilling and constructing a sacrificial 24-inch diameter trial shaft to a tip elevation of +420 feet and load testing the shaft to failure in general accordance with ASTM D 1143/D 1143M-07 test method. The load test should be performed not sooner than 7 days after the completion of shaft installation and after the concrete has achieved its design minimum unconfined compressive strength. An approximate recommended location of a sacrificial trial drilled shaft is shown on the Repair Plan, Plate 2.2.

2. Drilling and installation of the test shaft should be performed as recommended in subsection 6.5.3. The Contractor should modify their procedures and/or equipment, as necessary, if their drilling methods are unable to drill through subsurface materials encountered and properly construct the shaft during the test shaft program.

3. Because of the limited space and difficult site access, it is recommended that the load test be performed using a bi-directional load cell also referred to as an Osterberg Cell (O-cell®). Instead of a conventional load test set-up where load is applied from the top using hydraulic jacks, reaction frame with dead loads, or reaction anchor system, the axial load in a bi-directional load test is applied with an expendable jack and load cell cast within the test shaft.

   The O-cell® should be installed in the bottom portion of the shaft. The final cell position should be selected after consulting with the load cell manufacturer and in coordination with PGE. The test shaft tip elevation may need to be deeper than +420 feet depending on the cell position. The Contractor should provide hydraulic hoses, compressor, reference beams, weather protection, and all necessary equipment and labor for the test. The test shaft should be instrumented with strain gauges and telltales to measure strains and movements along the shaft during load testing as follows:

   a. At least 3 linear vibrating wire displacement transducers (LVWDTs) positioned between the lower and upper plates of the O-cell® assembly to measure expansion;

   b. At least 2 telltale casings (nominal ½-inch steel pipe) diametrically opposed, extending from the top of the O-cell® assembly to beyond the top of concrete to measure upward top-of-shaft movement;

   c. At least 2 telltale casings (nominal ½-inch steel pipe) diametrically opposed, extending from the bottom of the rebar cage to beyond the top of concrete to measure shaft-toe movement;

   d. At least 4 levels of 2 diametrically opposed strain gages above and at least 2 levels of 2 diametrically opposed strain gages below the O-cell®.

4. Before installing rebar cage and instrumentation, the shaft excavation should be checked with an acoustic measuring device such as SoniCaliper® Testing System or equal. This system evaluates shaft verticality, volume, and diameter in-situ by profiling the excavated surfaces. It is recommended that caliper readings be taken at least every 5 feet. Additional profiles should be taken as needed to check for anomalies in verticality, volume, or diameter. Within 1 hour after completing the calipering, a computer file of an analysis of shaft verticality, profile, diameter, and volume should be provided. The maximum tolerance from plumb, measured in center of the hole, should not exceed 1/4 inch per foot of depth.

5. It is recommended that the firm performing the load test be pre-qualified and have worked on at least three (3) projects similar in nature to this project within the last five (5) years and have at least five (5) years experience of O-cell® installation and testing. The testing firm should submit a list that includes a description of each project including the drilled shaft size, length, design capacity, subsurface materials, project owner's name, current phone number, and company name. It is

recommended that PGE be retained to observe the load test set-up, instrumentation installation, and load testing, and to review the test results.

6. PGE should be retained to observe the test shaft program and review the load test results. PGE should also be retained to provide feedback regarding recommended production shaft lengths after the completion of the test shaft program. The recommended minimum shaft tip elevation recommended herein may need to be modified depending on the test results.

6.5.5 Shaft Integrity Testing

1. It is recommended that non-destructive testing consisting of CSL and LSI be performed to check on the integrity of the test shaft and production shafts planned for this project. It is recommended that CSL testing be performed on at least 20 percent of the total number of production shafts but not less than 2 shafts. It is recommended that LSI testing be performed on the remaining production shafts.

2. CSL testing utilizes the propagation of acoustic signals through concrete to check for anomalies and defects in the concrete. The travel time of acoustic signals is measured by lowering a transmitter and a receiver along two parallel water filled access tubes placed in the shaft during construction. Anomalies in the drilled shafts such as voids and segregation generally result in a longer travel time for the signal and lower power of the arriving signal. CSL testing checks only the concrete quality along a narrow band between access tubes and cannot check on concrete quality outside of the test band. Because the access tubes are tied to the rebar cage and casted in the shafts, shafts to be tested must be preselected prior to installation.

   At least 3 CSL access tubes should be installed for shafts selected for CSL testing. The access tubes should consist of 2-inch diameter steel pipe.

   After completion of CSL testing, all access tubes in the shafts should be filled with grout that is of equal or higher strength than the drilled shaft.

3. LSI testing utilizes wave propagation to check for anomalies and defect in the concrete. The shaft top is struck with a hand held hammer. The impact of the hammer generates a compressive stress wave in the shaft, and an accelerometer attached to the top of the shaft monitors the motion associated with this wave. The stress wave propagates down the shaft and is reflected either at the shaft toe or a non-uniformity of the shaft. Unlike CSL testing, LSI testing does not provide a profile of shaft defects with depth. It also does not provide data on the extent of a defect.

4. If anomalies or defects in drilled shafts are suspected based on the results of the CSL testing or LSI testing, the drilled shafts should be cored continuously to check for possible defects and to check if the shaft with potential defects may be salvaged or if a replacement shaft is needed.

5. It is recommended that LSI testing be performed on the test shaft before it is load tested.

6.5.6 Lateral Earth Pressures and Earth Loads

1. The box culvert should be designed to resist lateral earth pressures from the backfill. An at-rest pressure of 60 pounds per square foot per foot of depth (psf/ft) for the culvert backfilled with structural fill measured from the top of the embankment may be used for design.

2. The vertical earth load from the embankment fill should be computed based on a total soil unit weight of 120 pounds per cubic foot (pcf).

6.5.7 Box Culvert Backfill and Embankment Fill

1. The box culvert should be backfilled with granular, free draining, non-expansive structural backfill to the top of the box culvert. The fill should be placed in not more than 6-inch thick loose lifts, moisture conditioned to within 2 percent of optimum moisture content for this material, and compacted to a relative compaction of at least 90 percent.

2. The fill for the new embankment, above the granular backfill for the box culvert, may consist of general fill conforming to the requirements as recommended in subsection 6.4 of this report. A non-woven geotextile filter fabric such as Mirafi 140N or equal should be provided between this material and the granular backfill to reduce the potential for infiltration of fines into the granular backfill. The fabric should overlap at least 24 inches along all joints.

6.6 ENERGY DISSIPATOR BASIN WALL SUPPORT

1. After performing the subgrade treatment as recommended in subsection 6.2.3 of this report, the energy dissipator basin wall footings may be designed using a nominal bearing resistance, q_n, of 5,450 pounds per square feet (psf) for footings founded on properly compacted structural fill material.

2. For Strength Limit design, a bearing resistance factor of 0.55 is specified in the AASHTO LRFD Table 11.5.6-1. For Extreme Event (seismic) design, a bearing resistance factor of 1.0 is specified in the AASHTO LRFD.

3. The above nominal bearing resistance may need to be revised depending on anticipated loading requirements for the walls.

6.7 LATERAL EARTH PRESSURES

1. An at-rest equivalent fluid pressure of 60 psf/ft may be used for design of the energy dissipator walls and grated drop inlet that are backfilled with free draining granular material and level backfill conditions.

2. The energy dissipator basin walls and grated drop inlet should also be designed to resist traffic surcharges from construction equipment, stockpiles, maintenance vehicles, and other surcharges, if present.

3. For seismic conditions, a seismic force based on an equivalent fluid pressure of 20 psf/ft should be added to the above lateral earth pressure. The seismic force should be applied at a location above the bottom of the footing equal to mid height of the wall.

4. A friction factor of 0.35 along the bases of footings may be used for footings founded on properly compacted structural fill.

6.8 WALL BACKFILL AND DRAINAGE

1. The energy dissipator basin walls and grated drop inlet should be backfilled with granular, free draining, non-expansive structural backfill to within 12 inches of the top of the walls. The fill should be placed in not more than 6-inch thick loose lifts, moisture conditioned to within 2 percent of optimum moisture content for this material, and compacted to a relative compaction of at least 90 percent.

2. The energy dissipator basin walls should be provided with a positive system of drainage using weep holes to reduce hydrostatic pressure buildup. The weep holes should be set above the anticipated high water level in the channel to reduce the potential for water back flow into the weep holes.

   The weep holes should be provided at a center to center spacing of not more than 6 feet. At least one cubic foot of ASTM D 448, No. 67 size basaltic gravel wrapped in filter fabric should be provided at the intake end of each weep hole. Low permeability fill or CLSM, as outlined in subsection 6.6, should be placed directly below the weep hole levels to reduce ponding of water behind the wall. If CLSM is used, it should be placed in lifts and each lift allowed to set-up before placing subsequent lifts to reduce potentially overstressing the walls. Lift thicknesses of the CLSM should be checked by the project structural engineer.

3. The energy dissipator basin wall backfill should be capped with at least 12 inches of low permeability fill in areas to be grassed. The grated drop inlet backfill should be capped with general fill in areas to be grassed. A non-woven geotextile filter fabric such as Mirafi 140N or equal should be provided between these materials and the granular backfill to reduce the potential for infiltration of fines into the granular backfill. The fabric should overlap at least 24 inches along all joints.

6.9 DRAIN PIPE

1. Based on SEY's preliminary plans and readily available subsurface information, it is anticipated that the subgrade soils at the invert of the drain pipe within the embankment repairs may consist mainly of general fill material.

2. Prior to installing the drain pipe, the bottom of the drain pipe trench should be compacted to provide a firm bottom as indicated by little to no yielding, pumping, or rutting of the subgrade under repeated passes of compaction equipment, but not less than six (6) passes. Any yielding or soft areas that do not readily compact should be excavated to firm soils and replaced with general fill material.

3. Seepage collars should be installed along the drain pipe spaced not more than 10 feet on center to reduce the potential for seepage to flow along the pipe. Seepage along the pipe could result in piping and erosion of the embankment.

4. Backfill over the pipe should consist of general fill material placed and compacted as recommended in subsection 6.4 of this report.

6.10 SITE CLASS

Based on the area geology and readily available subsurface information, it is recommended that the culvert repairs and new energy dissipator basin walls be designed based on Site Class D according to Table 3.10.3.1-1 of Section 3 of the 2010 AASHTO LRFD Bridge Design Specifications.

7.0 PLANS/SPECS REVIEW AND SERVICES DURING CONSTRUCTION

During the design, PGE plans to review the geotechnical related sections of the pre-final project plans and specifications to check that the intent of its recommendations presented in this report have been properly reflected in the contract documents.

During construction, PGE should be retained to observe important phases of the site preparation and foundation construction. PGE's involvement during foundation construction will allow PGE to check on the assumptions and recommendations presented in this report. It will also allow PGE to develop modifications to its recommendations, if necessary, should subsurface conditions differ from those presented in this report.

During the test shaft installation and load testing, PGE should be retained to observe the Contractor's drilling and shaft installation on a full-time basis to check for proper bearing

materials, cleaning, embedment depths, and proper placement of concrete. PGE should be retained to observe the load testing and to review the load test and non-destructive LSI test results.

During the construction, PGE should be retained to observe the production shaft installation and check on the drilling and installation of shafts and shaft integrity testing. PGE should also be retained to review the CSL and LSI test results and survey monitoring and inclinometer data.

If drilling conditions, test shaft embedment, or load test results indicate conditions different from those presented in this report, PGE's involvement during construction would enable it to modify and develop appropriate recommendations prior to installation of production shafts.

8.0 LIMITATIONS

This report has been prepared for the use of Shimabukuro, Endo, & Yoshizaki, Inc. for the proposed Haiku Road and Drainage Improvements project in Haiku, Maui, Hawaii in accordance with generally accepted soils and foundation engineering practices. No warranty or guarantee, expressed or implied, or other representation, is made as to the professional advice included in this report and none should be inferred.

This report has been developed solely and exclusively for the use of Shimabukuro, Endo, & Yoshizaki, Inc. for the Haiku Road and Drainage Improvements project as described herein. It does not contain sufficient information for purposes of other parties or for other uses. PGE is not responsible for any claims, damages, or liability associated with the use of the information presented in this report without the expressed written consent of PGE. No third party may rely upon this report or any other document prepared by us unless PGE has agreed to such reliance in advance and in writing.

This report does not reflect variations which may occur in the subsurface and groundwater conditions between borings. The nature and extent of variations of the subsurface and groundwater conditions may not become evident until construction. This report does not reflect the presence or absence of debris and/or obstructions that may be encountered at or below the ground surface.

Ground water was encountered in PGE's borings at the time of its field exploration and is indicated on the boring logs. However, fluctuations in the groundwater level may occur due to variations in rainfall, stream water levels, temperature and other factors that may be different from the conditions that existed at the time of PGE's measurements.

The comments and recommendations presented in this report are based on the anticipated construction described herein. Should the actual construction differ from that described in this report, PGE should be notified and retained to check if any modifications to the recommendations presented in this report are needed. The comments and recommendations presented in this report shall not be considered valid unless the changes are reviewed by PGE and the recommendations of this report verified or modified in writing.

The field exploration portion of this consultation may not have disclosed the presence of underground structures such as landfills, cesspools, buried debris, drywells, storage tanks, sumps, cavities, voids, and pits, etc., that may be present at the site. Should these items be encountered during construction, PGE should be notified and retained to provide appropriate recommendations for their disposal and/or treatment. Assessment of the presence or absence of these structures was not included in the scope of this consultation.

The scope of PGE's services for this project was limited to conventional geotechnical engineering services and did not include any environmental assessment or evaluations. Silence in this report regarding any environmental aspects of the site does not indicate the absence of potential environmental problems.

PGE's scope of services specifically excluded the investigation, detection, or assessment of the presence of Biological Pollutants in or around any existing or planned structures. Accordingly, this report includes no interpretations, recommendations, findings, or conclusions for the purpose of detecting, preventing, assessing, or abating Biological Pollutants. The term "Biological Pollutants" includes, but is not limited to molds, fungi, spores, bacteria, and viruses, and/or any of their byproducts.

- o0o -

The following plates, references, and appendices are attached and complete this report.

Plate 1	-	Map of Area
Plate 2.1	-	Plot Plan
Plate 2.2	-	Repair Plan
Plates 3.1 through 3.4	-	Generalized Subsurface Cross Sections A-A' through D-D'
Plate 4.1 through 4.11	-	Site Photographs

References

Appendix A	-	Field Exploration
Appendix B	-	Laboratory Testing

Yours very truly,

PACIFIC GEOTECHNICAL ENGINEERS, INC.

Glen Y.F. Lau, P.E.
President

Carl J. Iwasaki, P.E.
Project Engineer

GYL:ci(1875-029 pre-final rpt.doc)
(Six copies submitted)

General Location of Project Site

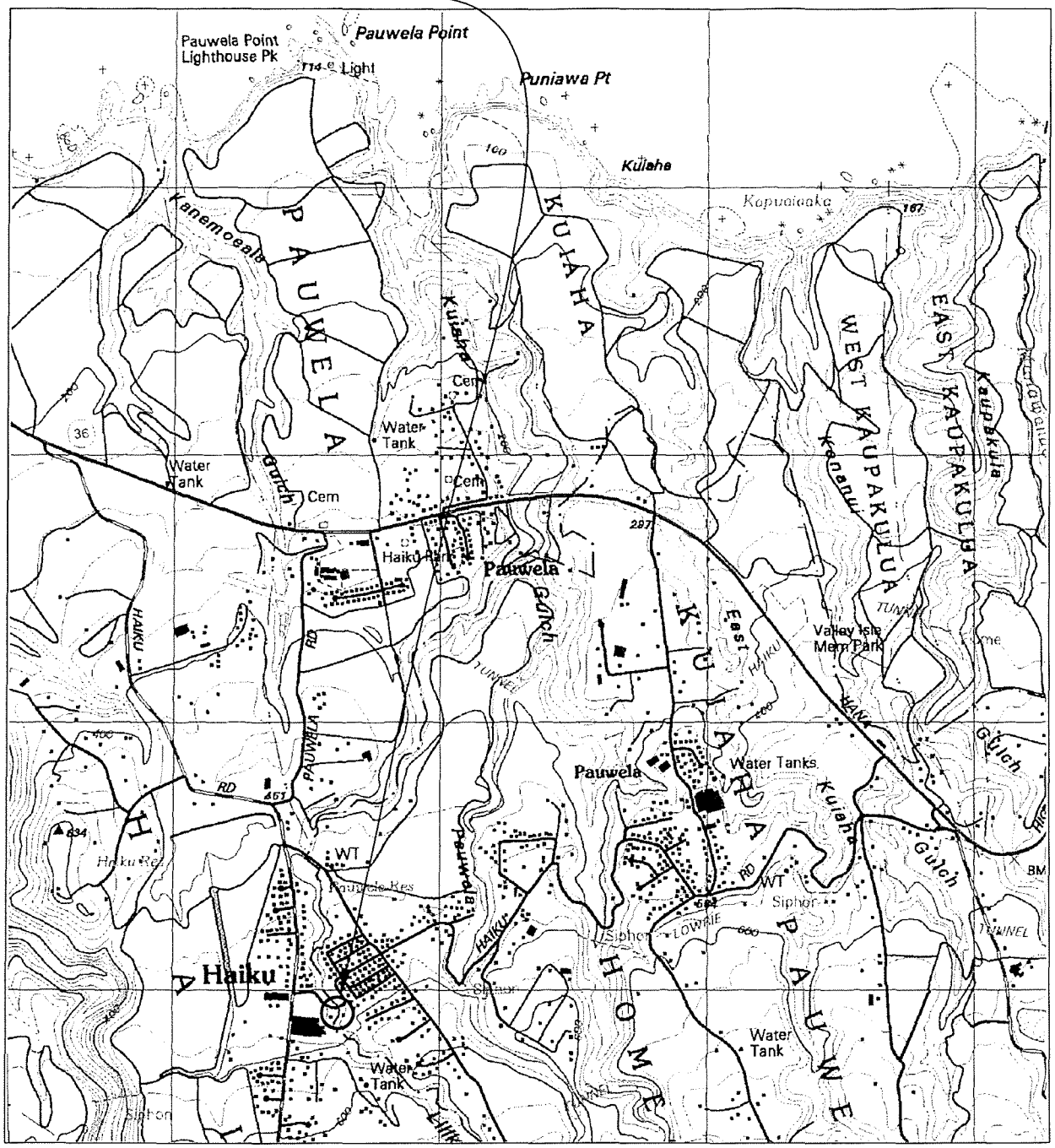

Contour Interval 40 Feet
Datum is Mean Sea Level
Depth Curves in Feet - Datum is Mean Lower Low Water

MAP OF AREA

Haiku Road and Drainage Improvements
Haiku, Maui, Hawaii

Reference:
U.S.G.S. Topographic Map
Haiku, Maui, Hawaii
Dated: 1992

Pacific Geotechnical Engineers, Inc.

PLATE 1

1875-029 moa.dwg (10-15-10)

J:\1875-029\engineering\cad\1875-029 moa.dwg, Map of Area, 4/8/2011 3:44:37 PM

1875-029 plot plan 2012.dwg (02-22-12)

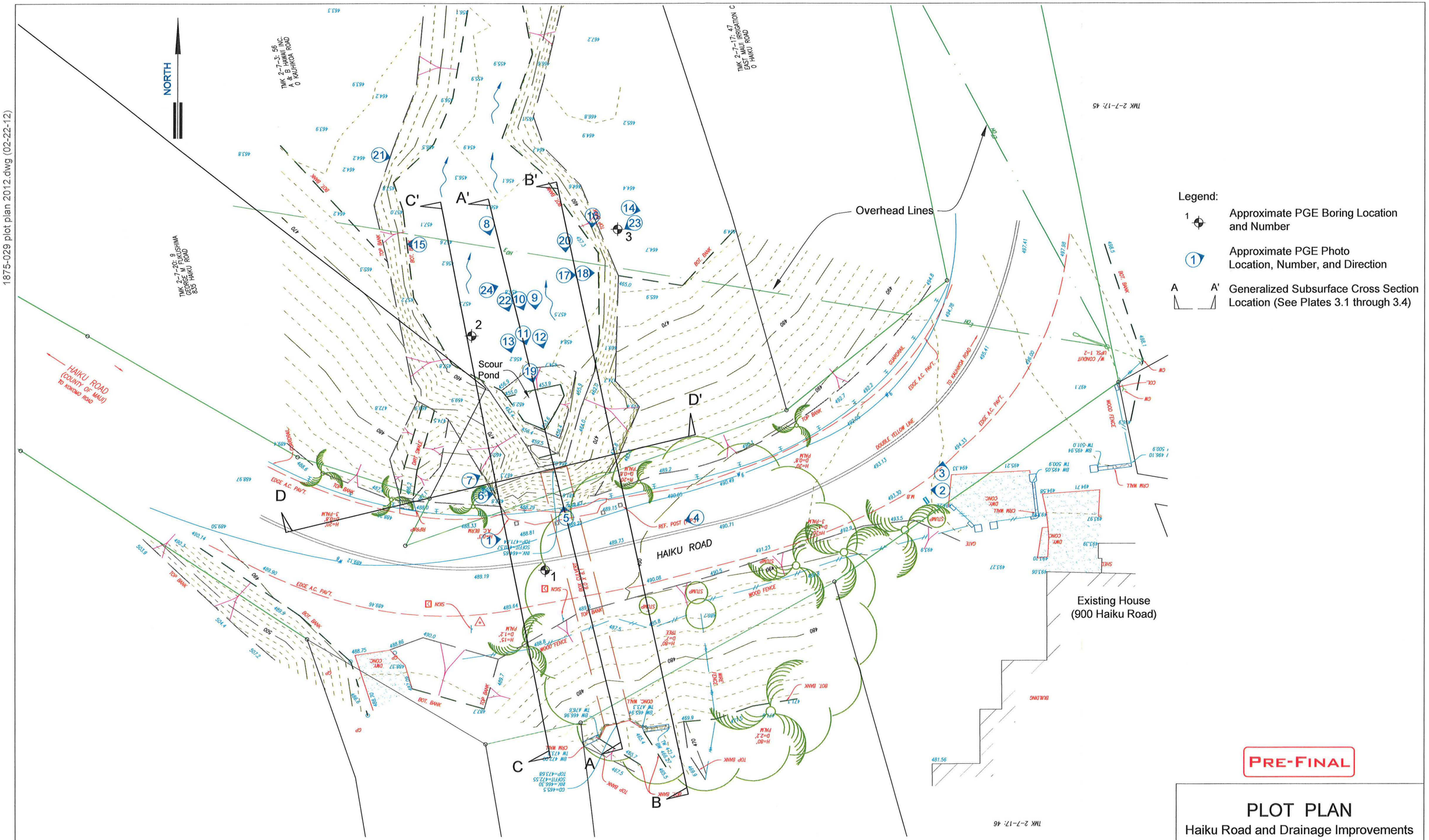

Reference:
Topographic Map
From: Shimabukuro Endo Yoshizaki, Inc.
Received: January 31, 2012

PRE-FINAL

PLOT PLAN

Haiku Road and Drainage Improvements
Haiku, Maui, Hawaii

Pacific Geotechnical Engineers, Inc.

PLATE 2.1

J:\1875-029\engineering\cad\1875-029 plot plan 2012.dwg, 2/27/2012 3:56:01 PM

1875-029 site plan 2012 jan31.dwg (02-27-12)

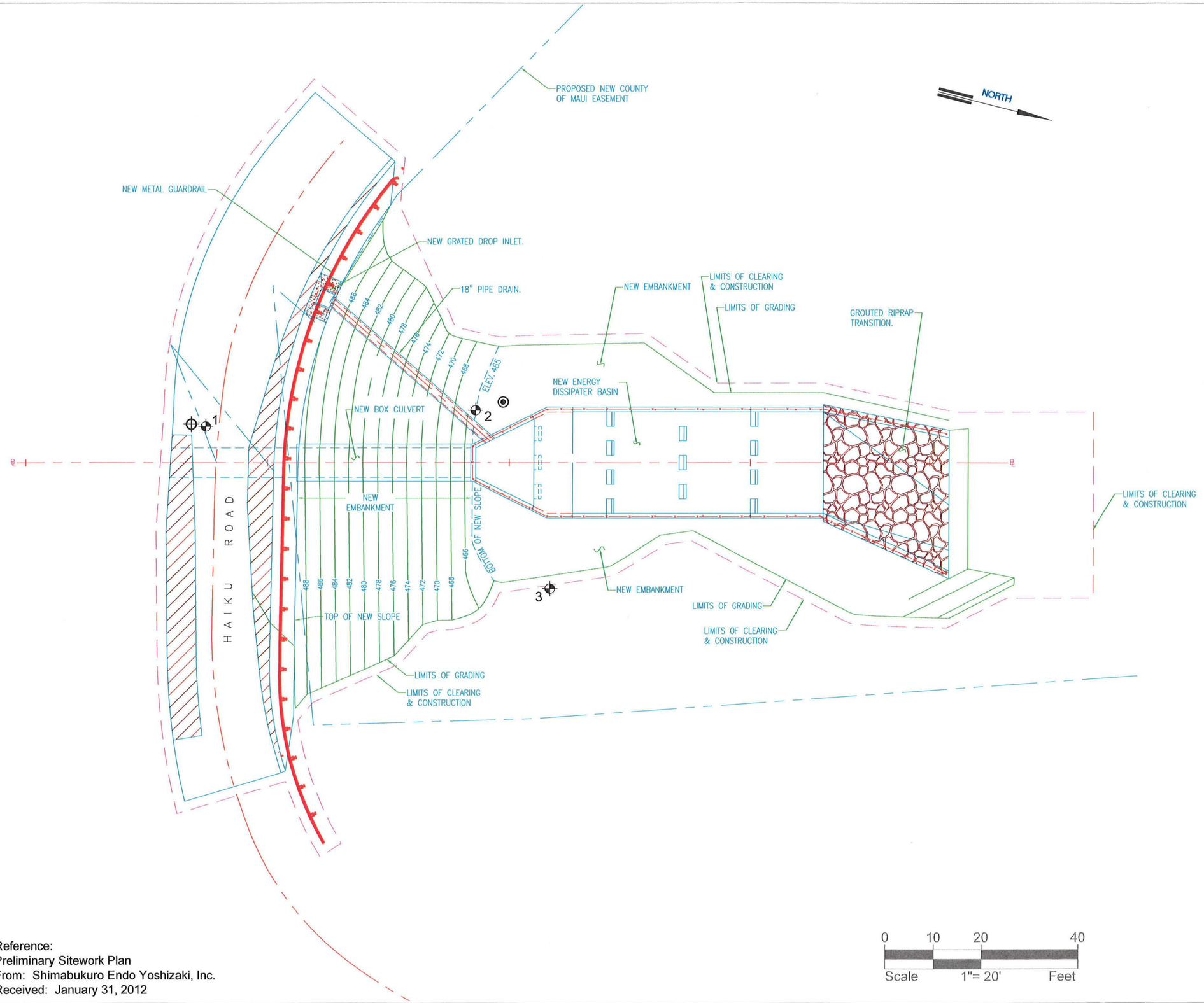

Legend:

1 Approximate PGE Boring Location and Number

Approximate Recommended Location of Inclinometer

Approximate Recommended Location of Trial Drilled Shaft

Reference:
Preliminary Sitework Plan
From: Shimabukuro Endo Yoshizaki, Inc.
Received: January 31, 2012

0 10 20 40
Scale 1"= 20' Feet

PRE-FINAL

REPAIR PLAN

Haiku Road and Drainage Improvements
Haiku, Maui, Hawaii

Pacific Geotechnical Engineers, Inc.

PLATE 2.2

J:\1875-029\engineering\cad\1875-029 Site Plan 2012 Jan31.dwg, 2/27/2012 3:58:19 PM

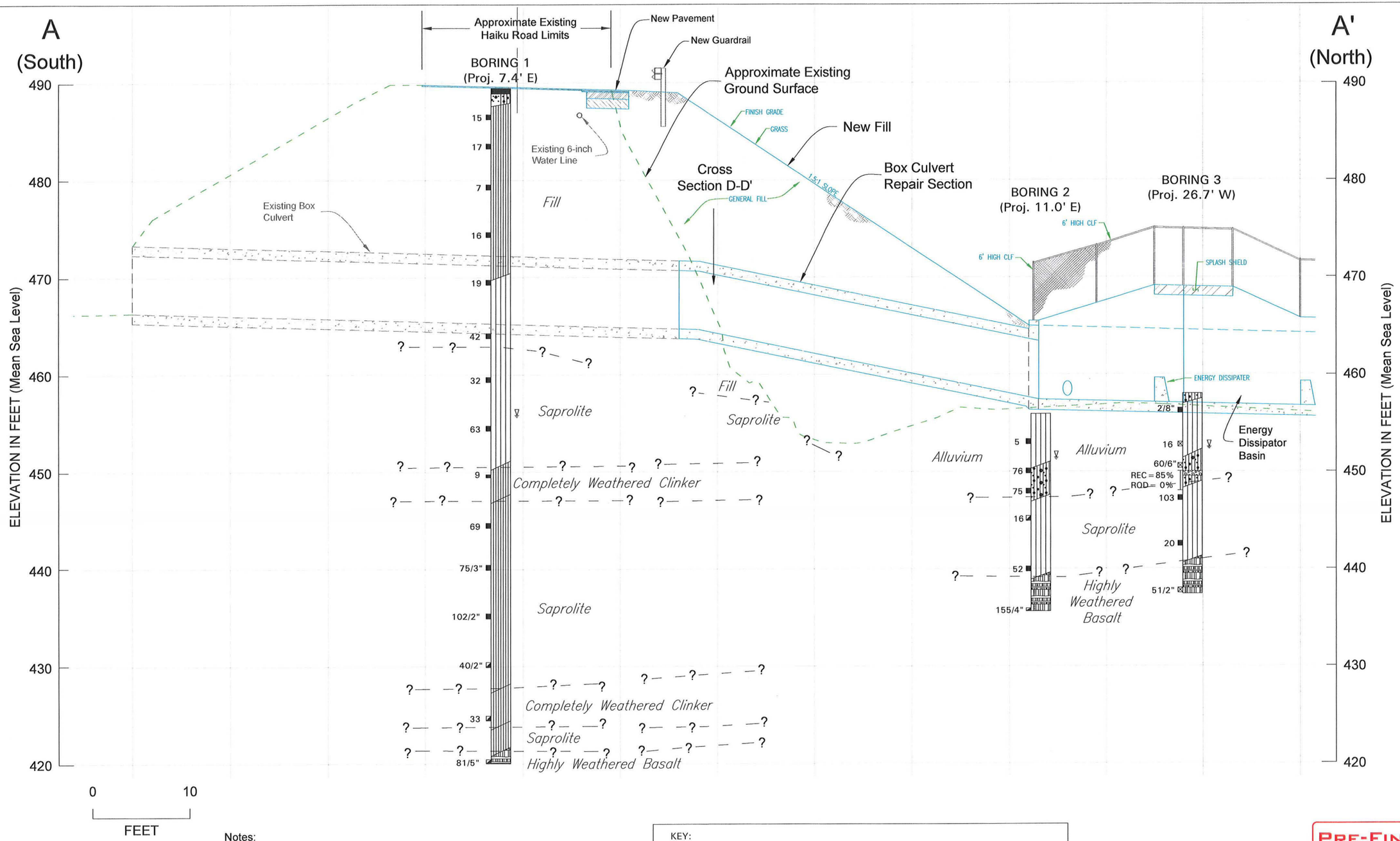

Notes:

1. The subsurface conditions illustrated between borings are based on geologic interpretations and interpolations between borings. The actual subsurface conditions will vary locally from those indicated.
2. The borings are projected to the section location. Because of the projections, the elevations of the top of borings may not coincide with the ground surface indicated on the section.
3. The blow counts for 3.3-inch diameter split barrel sampler represent actual blow counts for the last 12 inches of penetration and have not been converted to equivalent SPT-N values.

KEY:

AC | GP | GM | MH | ML | BASALT

- Relatively undisturbed sample, 3.3-inch O.D. and 2.4-inch I.D. split barrel sampler
- Disturbed sample, 3.3-inch O.D. and 2.4-inch I.D. split barrel sampler
- Sample lost during extraction, 3.3-inch O.D. and 2.4-inch I.D. split barrel sampler
- Standard penetration test sample, 2-inch O.D. and 1.4-inch I.D. split-spoon sampler
- Core run, 2.9-inch O.D. NX core barrel

DRIVING ENERGY: 140-lb. hammer dropping 30 inches.

Reference:
Topographic Map
From: Shimabukuro Endo Yoshizaki, Inc.
Received: January 31, 2012

Preliminary Plans, Profile 1
From: Shimabukuro Endo Yoshizaki, Inc.
Received: January 31, 2012

PRE-FINAL

Generalized Subsurface Cross Section A-A'

Haiku Road and Drainage Improvements
Haiku, Maui, Hawaii

Pacific Geotechnical Engineers, Inc.

PLATE 3.1

1875-029 profile new jan30_2012.dwg (02-22-12)
J:\1875-029\engineering\cad\1875-029 profile new Jan31_2012.dwg, 2/27/2012 4:01:38 PM

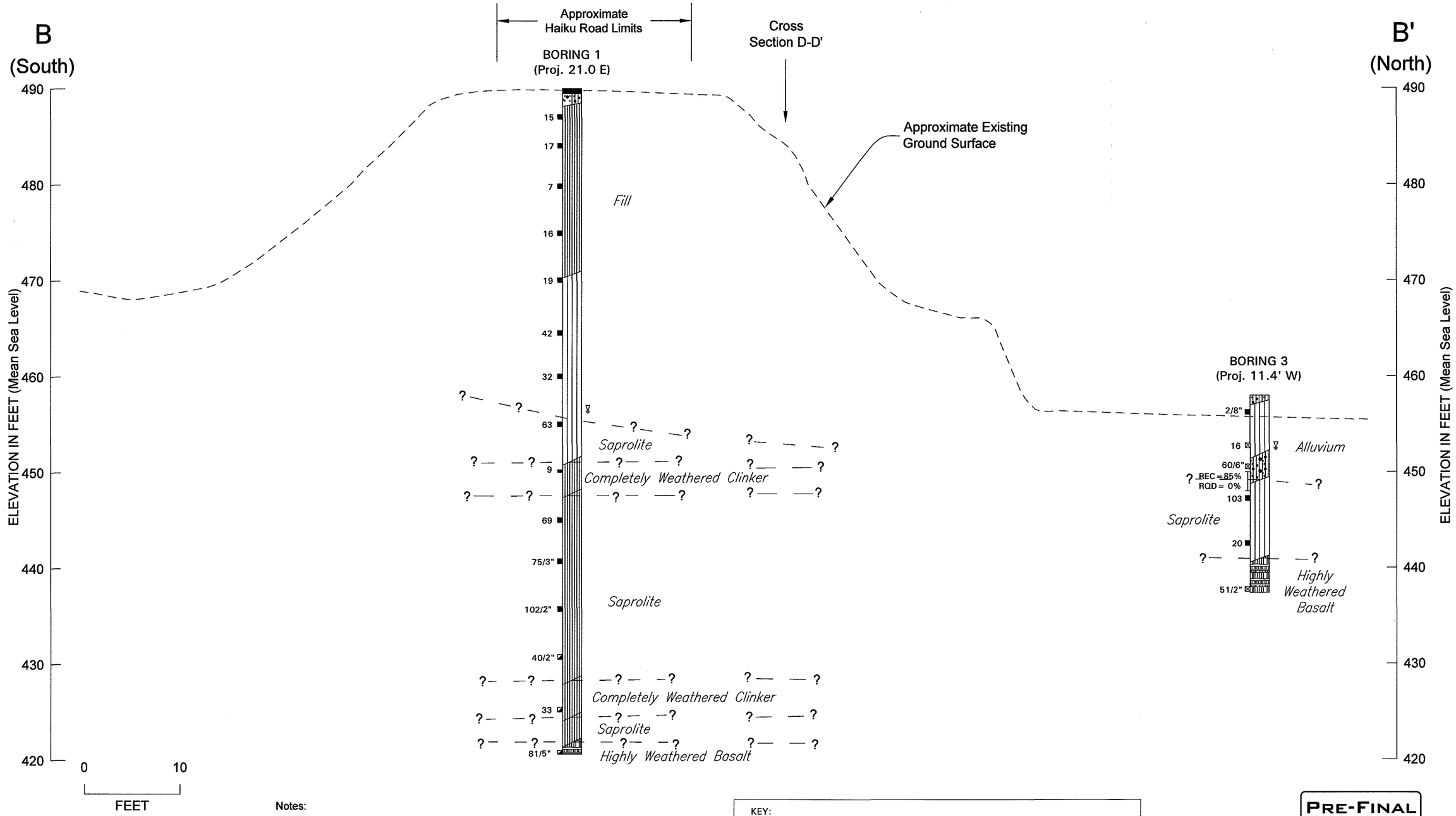

Notes:

1. The subsurface conditions illustrated between borings are based on geologic interpretations and interpolations between borings. The actual subsurface conditions will vary locally from those indicated.

2. The borings are projected to the section location. Because of the projections, the elevations of the top of borings may not coincide with the ground surface indicated on the section.

3. The blow counts for 3.3-inch diameter split barrel sampler represent actual blow counts for the last 12 inches of penetration and have not been converted to equivalent SPT-N values.

KEY:

AC, GP, GM, MH, ML, BASALT

- Relatively undisturbed sample, 3.3-inch O.D. and 2.4-inch I.D. split barrel sampler
- Disturbed sample, 3.3-inch O.D. and 2.4-inch I.D. split barrel sampler
- Sample lost during extraction, 3.3-inch O.D. and 2.4-inch I.D. split barrel sampler
- Standard penetration test sample, 2-inch O.D. and 1.4-inch I.D. split-spoon sampler
- Core run, 2.9-inch O.D. NX core barrel

DRIVING ENERGY: 140-lb. hammer dropping 30 inches.

Reference:
Topographic Map
From: Shimabukuro Endo Yoshizaki, Inc.
Received: January 7, 2010

PRE-FINAL

Generalized Subsurface Cross Section B-B'

Haiku Road and Drainage Improvements
Haiku, Maui, Hawaii

Pacific Geotechnical Engineers, Inc.

PLATE 3.2

1875-029 xsect bb.dwg (03-02-11)

J:\1875-029\engineering\cad\1875-029 xsect bb.dwg, 2/27/2012 4:04:08 PM

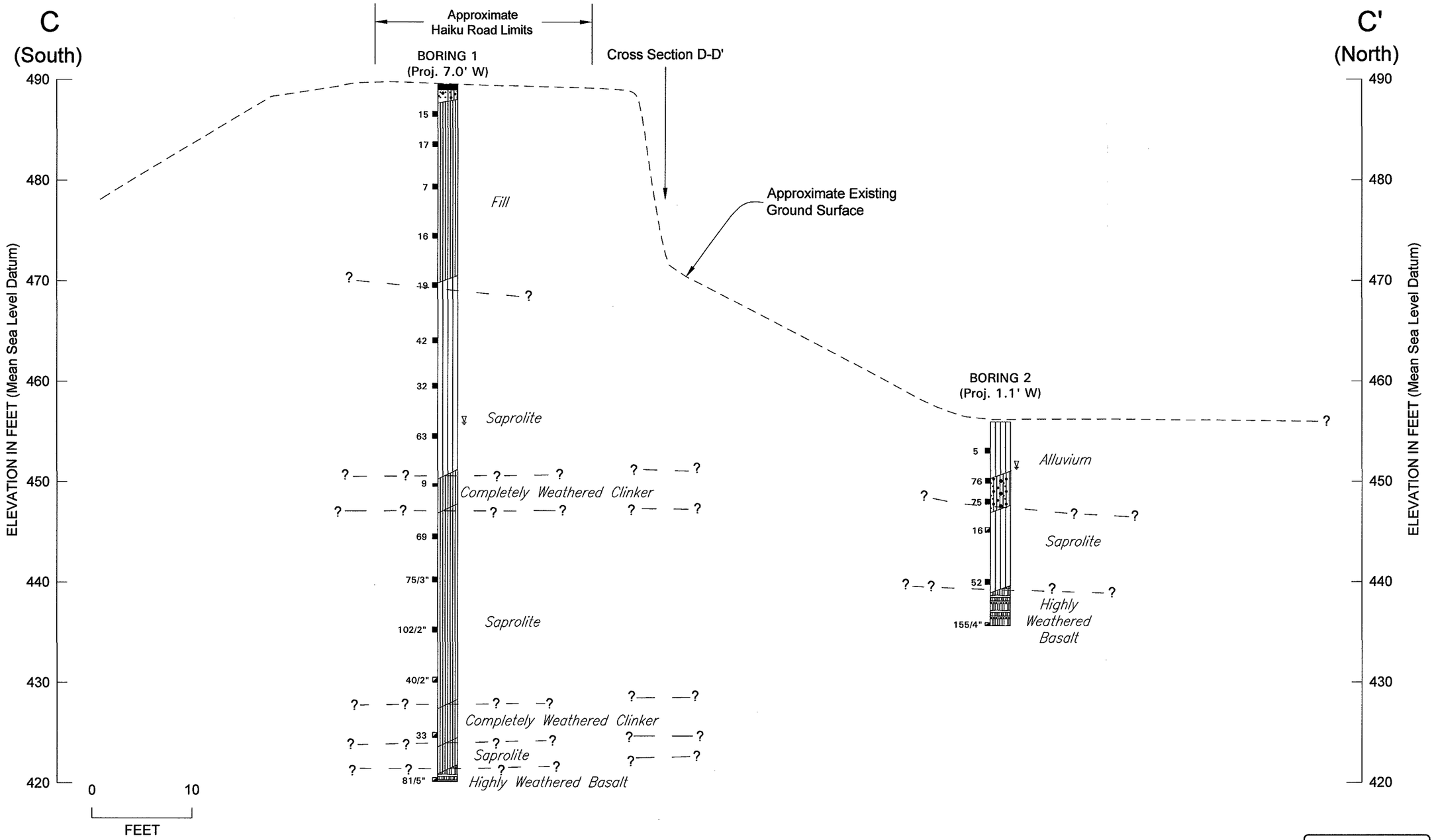

Notes:

1. The subsurface conditions illustrated between borings are based on geologic interpretations and interpolations between borings. The actual subsurface conditions will vary locally from those indicated.
2. The borings are projected to the section location. Because of the projections, the elevations of the top of borings may not coincide with the ground surface indicated on the section.
3. The blow counts for 3.3-inch diameter split barrel sampler represent actual blow counts for the last 12 inches of penetration and have not been converted to equivalent SPT-N values.

KEY:

AC | GP | GM | MH | ML | BASALT

- Relatively undisturbed sample, 3.3-inch O.D. and 2.4-inch I.D. split barrel sampler
- Disturbed sample, 3.3-inch O.D. and 2.4-inch I.D. split barrel sampler
- Sample lost during extraction, 3.3-inch O.D. and 2.4-inch I.D. split barrel sampler
- Standard penetration test sample, 2-inch O.D. and 1.4-inch I.D. split-spoon sampler
- Core run, 2.9-inch O.D. NX core barrel

DRIVING ENERGY: 140-lb. hammer dropping 30 inches.

Reference:
Topographic Map
From: Shimabukuro Endo Yoshizaki, Inc.
Received: January 7, 2010

PRE-FINAL

Generalized Subsurface Cross Section C-C'

Haiku Road and Drainage Improvements
Haiku, Maui, Hawaii

Pacific Geotechnical Engineers, Inc.

PLATE 3.3

1875-029 xsect cc.dwg (03-02-11)

J:\1875-029\engineering\cad\1875-029 xsect cc.dwg, 2/27/2012 4:06:04 PM

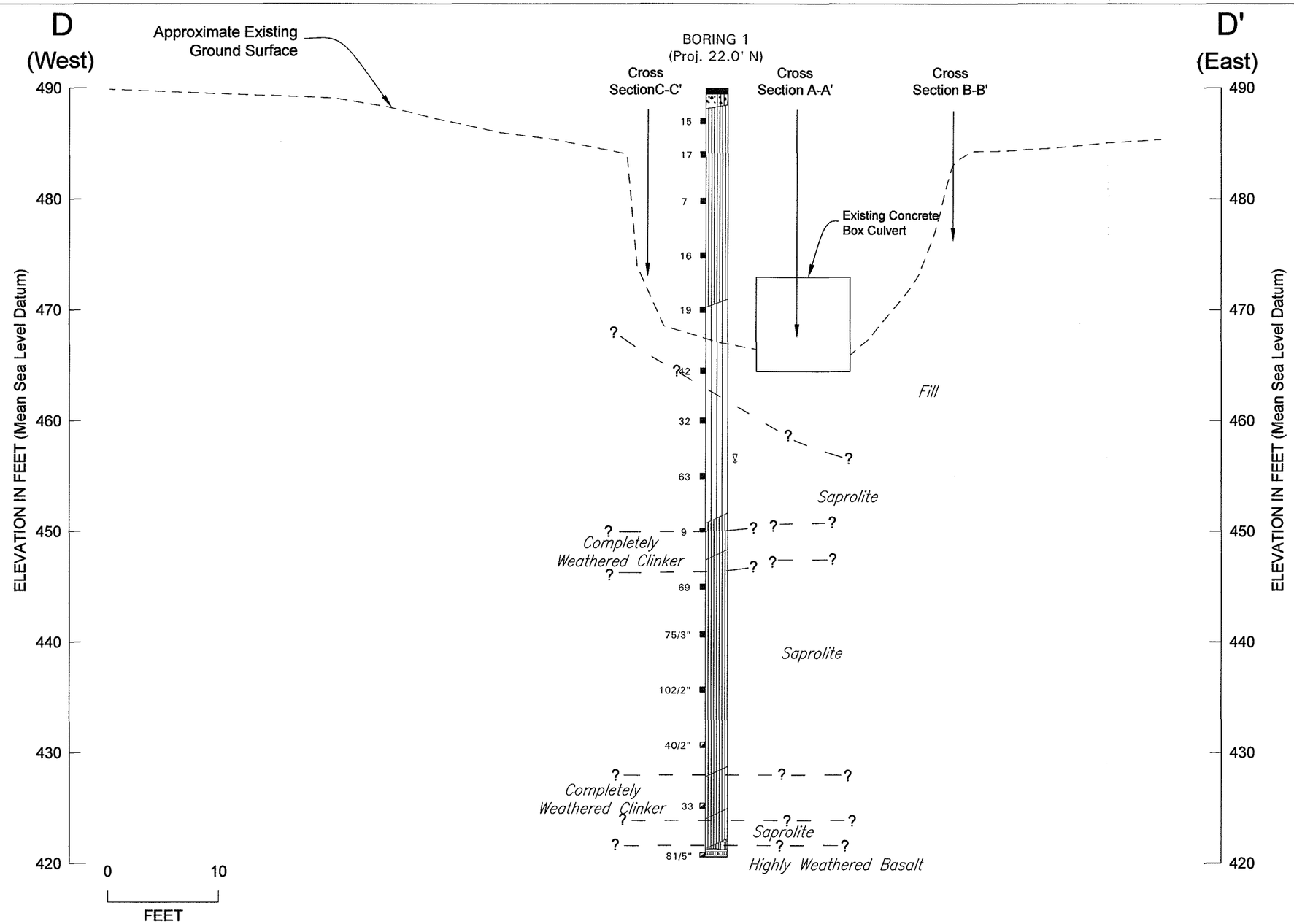

Notes:

1. The subsurface conditions illustrated between borings are based on geologic interpretations and interpolations between borings. The actual subsurface conditions will vary locally from those indicated.
2. The borings are projected to the section location. Because of the projections, the elevations of the top of borings may not coincide with the ground surface indicated on the section.
3. The blow counts for 3.3-inch diameter split barrel sampler represent actual blow counts for the last 12 inches of penetration and have not been converted to equivalent SPT-N values.

KEY:

AC | GP | GM | MH | ML | BASALT

- Relatively undisturbed sample, 3.3-inch O.D. and 2.4-inch I.D. split barrel sampler
- Disturbed sample, 3.3-inch O.D. and 2.4-inch I.D. split barrel sampler
- Sample lost during extraction, 3.3-inch O.D. and 2.4-inch I.D. split barrel sampler
- Standard penetration test sample, 2-inch O.D. and 1.4-inch I.D. split-spoon sampler
- Core run, 2.9-inch O.D. NX core barrel

DRIVING ENERGY: 140-lb. hammer dropping 30 inches.

Reference:
Topographic Map
From: Shimabukuro Endo Yoshizaki, Inc.
Received: January 7, 2010

Section and Plan Sketches
From: Shimabukuro Endo Yoshizaki, Inc.
Received: January 3, 2011

PRE-FINAL

Generalized Subsurface Cross Section D-D'

Haiku Road and Drainage Improvements
Haiku, Maui, Hawaii

Pacific Geotechnical Engineers, Inc.

PLATE 3.4

1875-029 xsect dd.dwg (03-02-11)
J:\1875-029\engineering\cad\1875-029 xsect dd.dwg, 2/27/2012 4:08:04 PM

1875-029 haiku site photographs (2/27/2012 1:53 PM)

PHOTO 1 – Haiku Road above culvert, facing east.

PHOTO 2 – Haiku Road, facing west.

PRE-FINAL

SITE PHOTOGRAPHS
Haiku Road and Drainage Improvements
Haiku, Maui, Hawaii

Pacific Geotechnical Engineers, Inc.

PLATE 4.1

1875-029 haiku site photographs (2/27/2012 1:53 PM)

PHOTO 3 – Haiku Road, facing northeast.

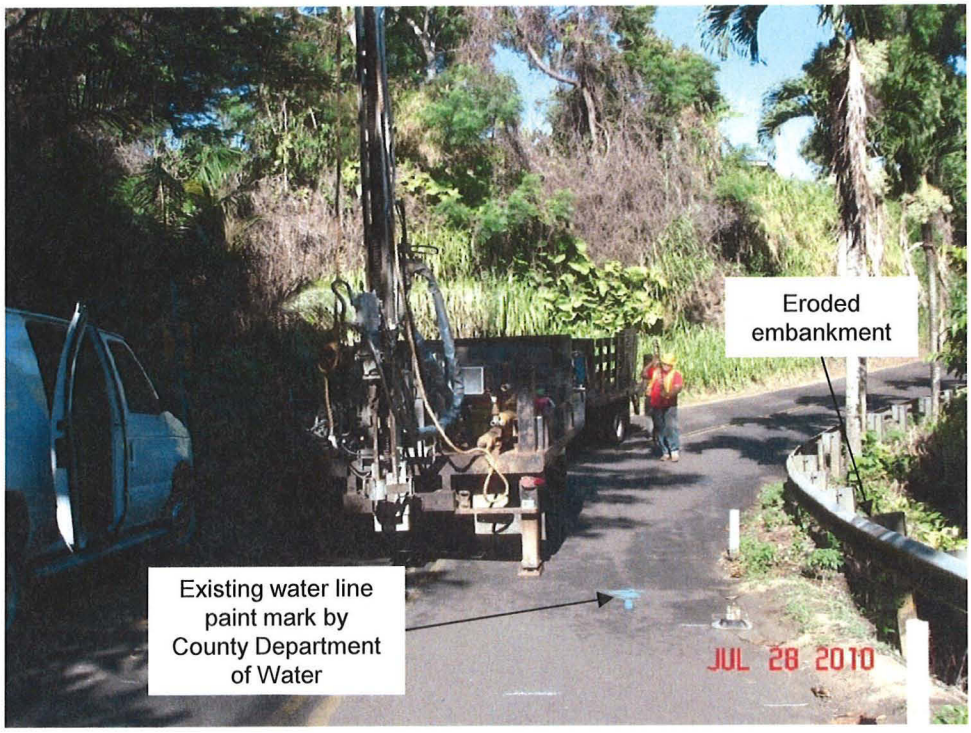

PHOTO 4 – Preparing to drill at Boring 1, facing west.

PRE-FINAL

SITE PHOTOGRAPHS
Haiku Road and Drainage Improvements
Haiku, Maui, Hawaii

Pacific Geotechnical Engineers, Inc.

PLATE 4.2

1875-029 haiku site photographs (2/27/2012 1:53 PM)

4.5-inches of asphaltic concrete

6 inches of coarse basaltic gravel

PHOTO 5 – Haiku Road pavement section above culvert.

Haiku Road

PHOTO 6 – Eroded embankment.

PRE-FINAL

SITE PHOTOGRAPHS
Haiku Road and Drainage Improvements
Haiku, Maui, Hawaii

Pacific Geotechnical Engineers, Inc.

PLATE 4.3

1875-029 haiku site photographs (2/27/2012 1:53 PM)

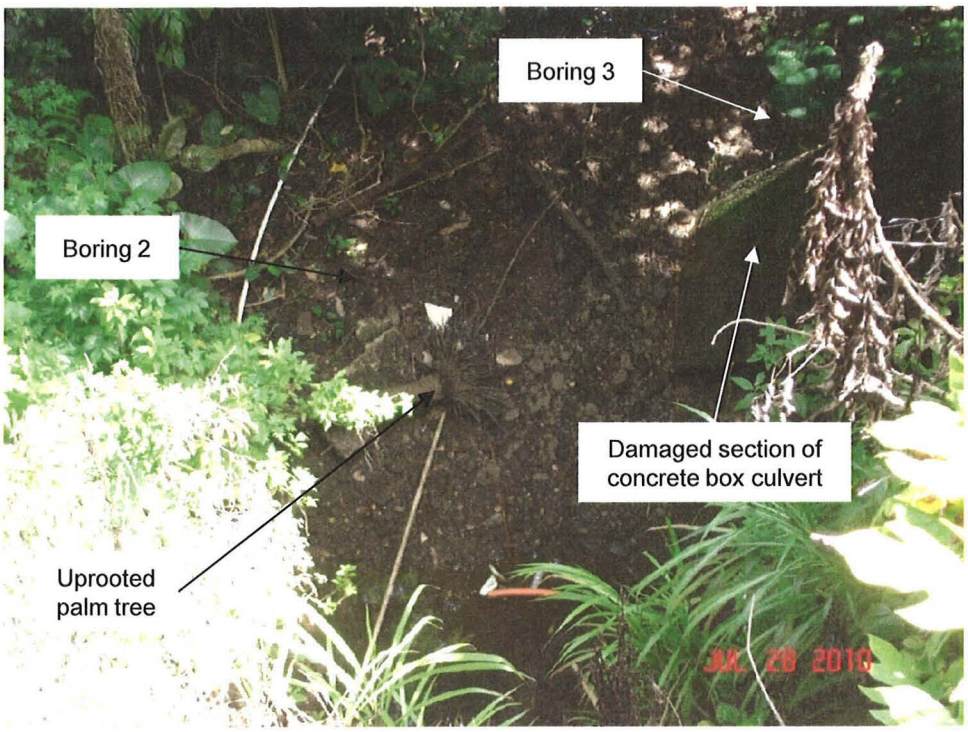

PHOTO 7 – View of gulch floor from top of eroded embankment.

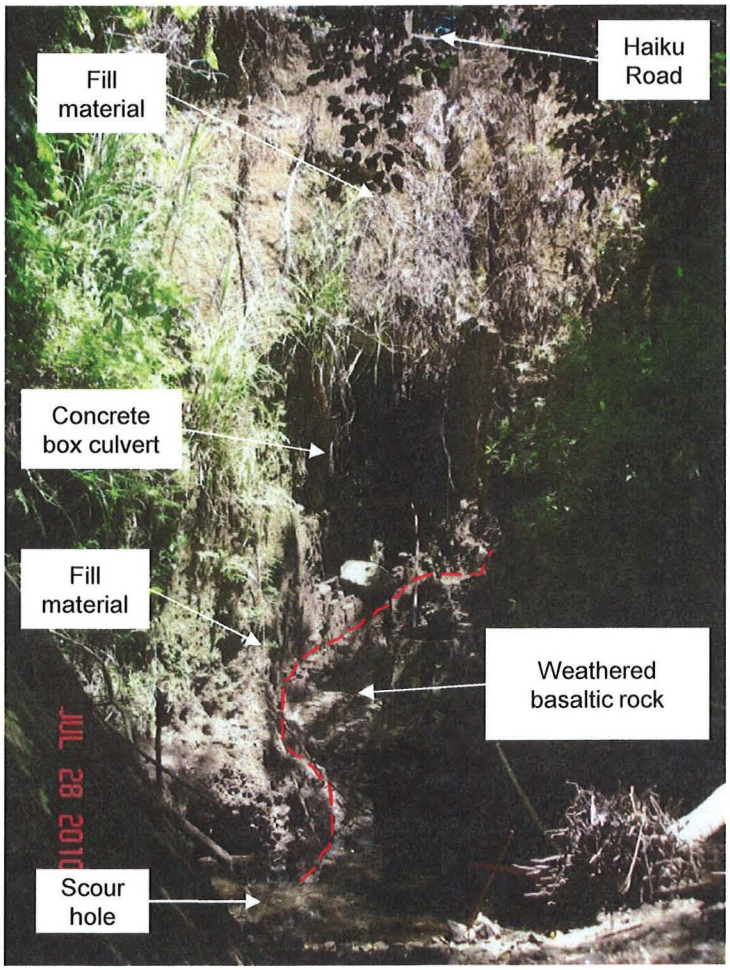

PHOTO 8 – Eroded embankment, facing south.

PRE-FINAL

SITE PHOTOGRAPHS
Haiku Road and Drainage Improvements
Haiku, Maui, Hawaii

Pacific Geotechnical Engineers, Inc.

PLATE 4.4

1875-029 haiku site photographs (2/27/2012 1:53 PM)

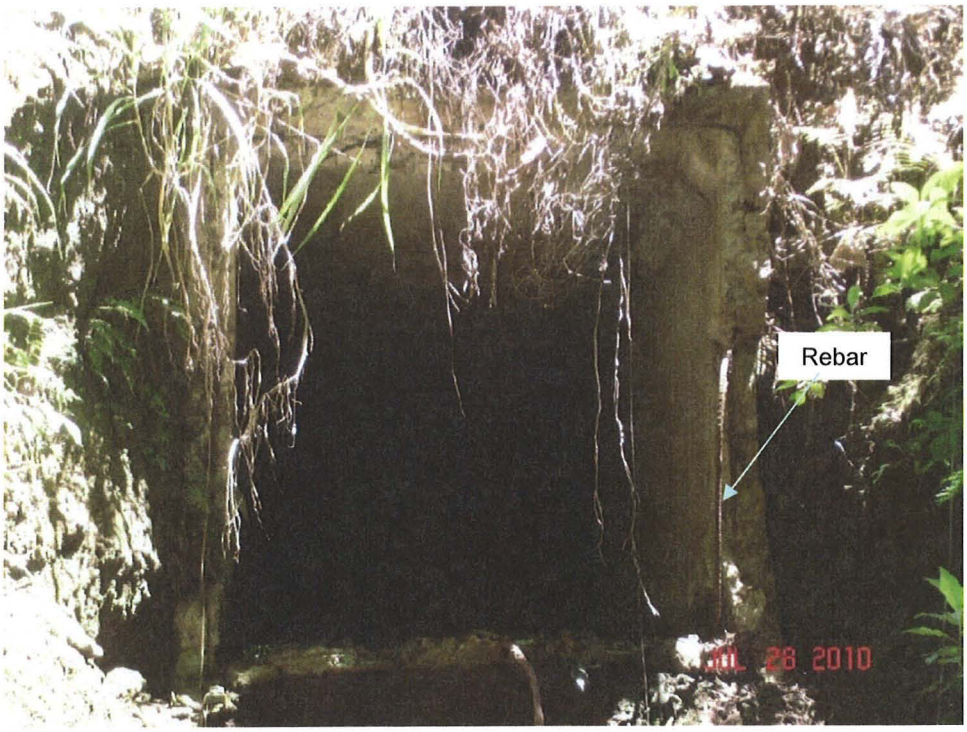

PHOTO 9 – Concrete box culvert in eroded embankment, facing south.

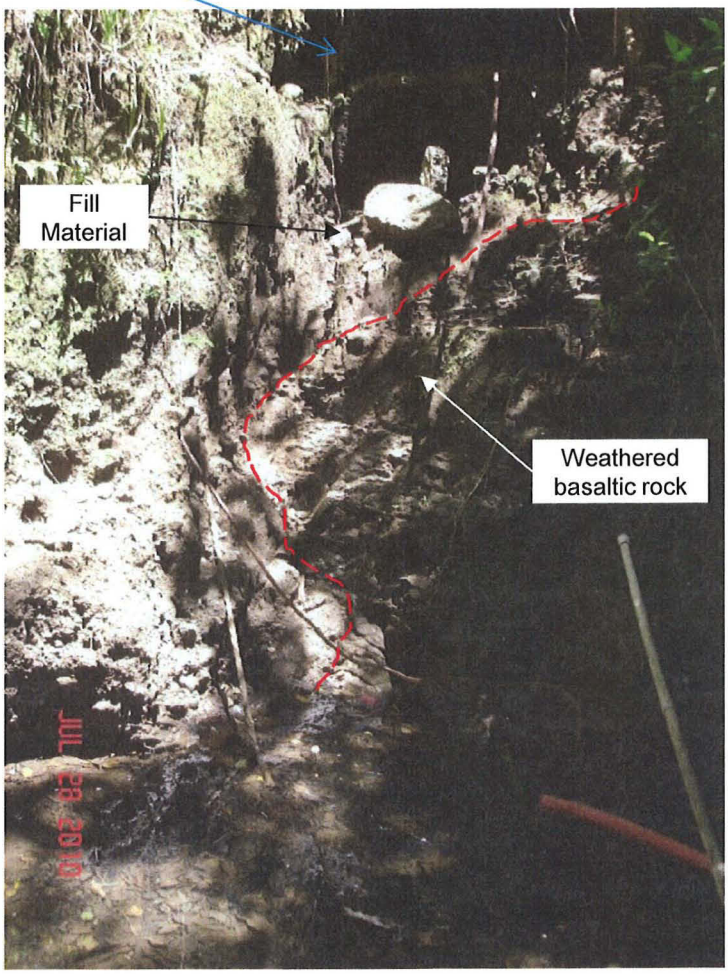

PHOTO 10 – The dashed line marks the approximate boundary between fill material and the underlying weathered basaltic rock.

PRE-FINAL

SITE PHOTOGRAPHS
Haiku Road and Drainage Improvements
Haiku, Maui, Hawaii

Pacific Geotechnical Engineers, Inc.

PLATE 4.5

1875-029 haiku site photographs (2/27/2012 1:53 PM)

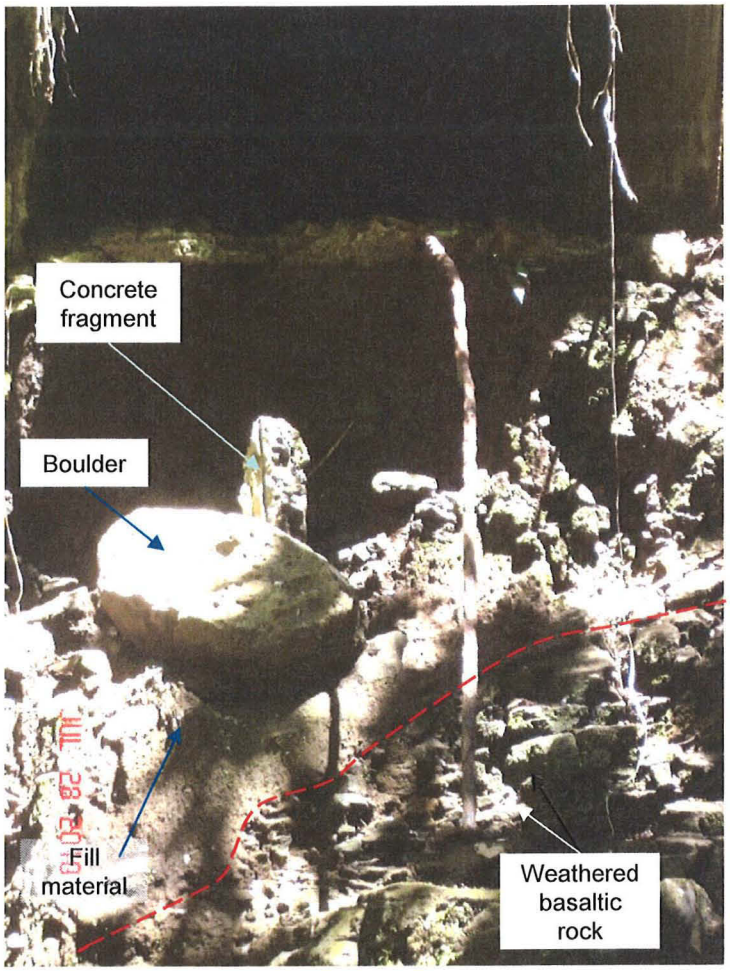

PHOTO 11 – Close-up of eroded embankment below concrete box culvert.

PHOTO 12 – East sidewall of gulch near culvert consists of weathered older alluvium, facing south.

PRE-FINAL

SITE PHOTOGRAPHS
Haiku Road and Drainage Improvements
Haiku, Maui, Hawaii

Pacific Geotechnical Engineers, Inc.

PLATE 4.6

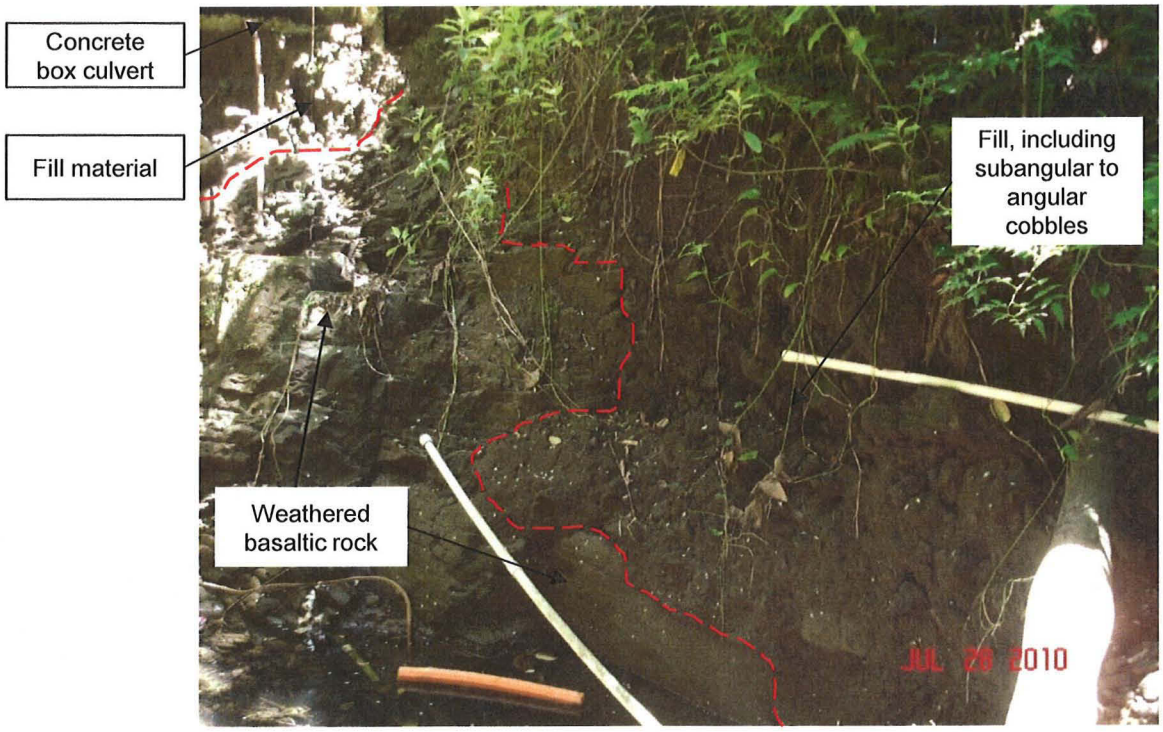

PHOTO 13 – West sidewall of gulch near culvert consists of fill material, facing south.

PHOTO 14 – East sidewall near gulch floor consists of older alluvium.

PRE-FINAL

SITE PHOTOGRAPHS
Haiku Road and Drainage Improvements
Haiku, Maui, Hawaii

Pacific Geotechnical Engineers, Inc.

PLATE 4.7

1875-029 haiku site photographs (2/27/2012 1:53 PM)

1875-029 haiku site photographs (2/27/2012 1:53 PM)

PHOTO 15 – West sidewall near gulch floor consists of fill material.

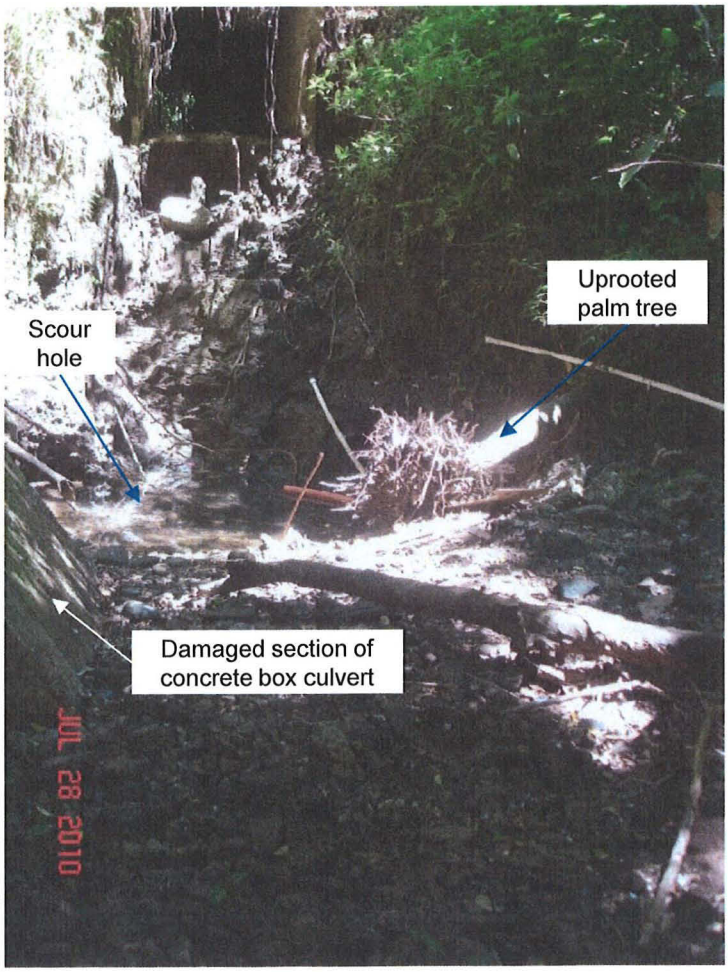

PHOTO 16 – Gulch floor below eroded embankment, facing south.

PRE-FINAL

SITE PHOTOGRAPHS
Haiku Road and Drainage Improvements
Haiku, Maui, Hawaii

Pacific Geotechnical Engineers, Inc.

PLATE 4.8

1875-029 haiku site photographs (2/27/2012 1:53 PM)

PHOTO 17 – Damaged section of concrete box culvert on gulch floor.

PHOTO 18 – About 1/4–inch wide crack in damaged section of concrete box culvert.

PRE-FINAL

SITE PHOTOGRAPHS
Haiku Road and Drainage Improvements
Haiku, Maui, Hawaii

Pacific Geotechnical Engineers, Inc.

PLATE
4.9

1875-029 haiku site photographs (2/27/2012 1:53 PM)

PHOTO 19 – Depth to weathered rock in scour pond is about 2 to 2.5 feet.

PHOTO 20 – Irrigation water is about one foot deep inside concrete box culvert.

PRE-FINAL

SITE PHOTOGRAPHS
Haiku Road and Drainage Improvements
Haiku, Maui, Hawaii

Pacific Geotechnical Engineers, Inc.

PLATE
4.10

1875-029 haiku site photographs (2/27/2012 1:53 PM)

PHOTO 21 – About 6 inches of water covers Boring 3 location during demobilization, facing east.

PRE-FINAL

SITE PHOTOGRAPHS
Haiku Road and Drainage Improvements
Haiku, Maui, Hawaii

Pacific Geotechnical Engineers, Inc.

PLATE
4.11

REFERENCES

1. Macdonald, Gordon A., Abbott, A.T., and Peterson, F.L., Volcanoes in the Sea the Geology of Hawaii, the University of Hawaii Press, Honolulu, September 1983.

2. Sherrod, David R., Sinton, J.M., Watkins, S.E., and Brunt, K.M., Geologic Map of the State of Hawaii: U.S. Geological Survey, Open-file Report 2007-1089, Version 1.0, Plate 7, geologic map of the island of Maui, 2007.

3. Stearns, Harold T. and Macdonald, G.A., Geology and Ground-water Resources of the Island of Maui, Hawaii, Territory of Hawaii, Hawaii Division of Hydrography, Bulletin 7, Geologic and Topographic Map of Island of Maui, Hawaii, 1942.

4. United States Department of Agriculture, Natural Resources Conservation Service, Web Soil Survey, Island of Maui, Hawaii (HI980), available online at http://websoilsurvey.nrcs.usda.gov, accessed on December 8, 2009.

APPENDIX A

FIELD EXPLORATION

The field exploration program consisted of drilling three (3) soil test borings, designated as Borings 1 through 3, to depths ranging from 20.3 to 69.4 feet below existing grades. The approximate locations of the borings are shown on the Plot Plan, Plate 2 in the main text. The locations and elevations of the borings were estimated based on a project topographic map by ControlPoint Surveying, Inc. (CPS) and PGE's field measurements using a surveyor's wheel and 100-foot tape.

The borings were drilled by PGE's subcontracted driller, Hawaii Test Borings, Inc. (HTB), using a SIMCO 2400 SK-1 truck mounted drill rig for Boring 1 located on Haiku Road and a portable Concore rig for Borings 2 and 3 located at the bottom of the channel. A boom truck was used to lower the portable Concore equipment from Haiku Road into the channel. The drilling equipment used 4-inch diameter continuous flight augers and rotary wash drilling methods. Soil sampling was conducted under the observation of PGE's engineering personnel who maintained a log of the materials encountered in each boring and obtained relatively undisturbed and disturbed soil samples for further examination and laboratory testing.

Relatively undisturbed and disturbed soil samples were obtained in the borings using a stainless steel split barrel sampler with an outside diameter (O.D.) of 3.3 inches and an inside diameter (I.D.) of 2.4 inches and a Standard Penetration Test (SPT) split spoon sampler with an O.D. and I.D. of 2 and 1.4 inches, respectively. The samplers were driven with blows from a 140-pound hammer falling 30 inches. Each sampling attempt consisted of driving the sampler a total distance of approximately 18 inches, and recording the blow counts for each 6 inches of penetration. The blow counts for the last 12 inches of penetration are shown on the boring logs. The blow counts for the 3.3-inch diameter split barrel sampler represent actual blow counts and have <u>not</u> been corrected to equivalent SPT-N values. At the completion of the field work, the soil samples and rock cores retrieved from the borings were transported to PGE's laboratory on Oahu for further examination and testing.

In Boring 3, a basaltic cobble was cored with a double tube, NX size core barrel that recovers cores of approximately 2 inches in diameter.

Graphical representations of the soils encountered in the borings are presented on the Log of Borings, Plates A-1.1.1 through A-1.3. The soils encountered in the borings were initially classified in the field in general accordance with ASTM D 2488 test procedures and the Unified Soil Classification System presented on Plates A-2.1 and A-2.2. Additional field data from PGE's observations of the drilling process, soil cuttings, drilling rate, and soil sampling were used to supplement the field classifications of the soils. The field classifications were later refined according to ASTM D 2487 based on the results of laboratory tests performed on selected soil samples.

Basaltic rock encountered was described according to the Rock Description System presented on Plate A-3. A photograph of the rock core retrieved from Boring 3 is shown on Plate A-4.

Ground water was encountered in all of PGE's borings at the time of the field exploration. The measured water levels are indicated on the boring logs.

After the completion of drilling, Boring 1 was backfilled with a bentonite-cement grout to near the existing grade and capped with cold mix asphaltic concrete.

- o0o -

The following plates are attached and complete this appendix.

Plates A-1.1.1 through A-1.3	-	Log of Borings, Borings 1 through 3
Plates A-2.1 and A-2.2	-	Unified Soil Classification System
Plate A-3	-	Rock Description System
Plate A-4	-	Photograph of Rock Core

PROJECT *Haiku Road and Drainage Improvements* JOB No. *1875-029*

LOCATION *Haiku, Maui, Hawaii* DRAWN BY *iml*

BORING 1 (Page 1 of 2)

SURFACE ELEVATION *+490* ± Feet

DATUM *Mean Sea Level*

LAB DATA		CORE INFO							
MOISTURE CONTENT %	DRY DENSITY (pcf)	CORE TYPE	RECOVERY %	RQD %	BLOWS/FT.	DEPTH (feet)	SAMPLES	SOIL CLASS	DESCRIPTION
								GP GM	6.5 inches of asphaltic concrete
									Dark brownish gray poorly graded, coarse basaltic gravel, with basaltic cobbles and silt, moist (fill)
								MH	
34	87				15				Mottled brown and reddish yellow elastic silt, stiff, with gray and brown highly to completely weathered basaltic gravel, moist (fill)
						5			
					17				grades with rounded basaltic gravel
									grades medium stiff
30	81				7	10			
29	89				16	15			
36	80				19	20		ML	Mottled brownish gray, reddish brown, and brown silt, stiff, moist (saprolite)
39	83				42	25			grades mottled brownish gray and dark reddish brown, and very stiff
40	80				32	30			grades mottled gray and dark gray
									(Water level at 0830 hours on 07-29-10)
42	83				63	35			grades saturated and hard
								MH	Mottled reddish brown and brown elastic silt, medium stiff, saturated (completely weathered clinker)
62	66				9	40			

DRAFT

NOTES:
- ■ - 3.3-inch outside diam. split-barrel sampler
- ☒ - Disturbed sample (3.3-inch O.D.)
- □ - Sample lost during extraction
- ◪ - 2-inch outside diam. Standard Penetration Test split-spoon sampler
- I - Core run

DRIVING ENERGY: 140-lb. dropping 30 inches

LOG OF BORING

PGE Pacific Geotechnical Engineers, Inc.

PLATE A-1.1.1

PROJECT *Haiku Road and Drainage Improvements* JOB No. *1875-029*

BORING 1 (Page 2 of 2)

LAB DATA		CORE INFO							
MOISTURE CONTENT %	DRY DENSITY (pcf)	CORE TYPE	RECOVERY %	RQD %	BLOWS/FT.	DEPTH (feet)	SAMPLES	GRAPHIC LOG	SOIL CLASS	DESCRIPTION
									MH	
									MH	Mottled grayish brown and light reddish brown elastic silt, stiff, saturated (saprolite)
64	65				69	45	■			grades hard
30	97				75/3"	50	■			
					102/2"	55	☒			grades mottled grayish brown and dark reddish brown
34					40/2"	60	◪			
									MH	Mottled brownish gray and reddish brown elastic silt, hard, saturated (completely weathered clinker)
48					33	65	◪			
									MH	Gray elastic silt, hard, saturated (saprolite)
					81/5"		◪			Gray basalt, soft, moderately vesicular, highly to completely weathered

Boring completed at 69.4 feet on 07-29-10.

Note: The blow counts for the 3.3-inch diameter split barrel sampler represent actual blow counts and have not been converted to equivalent SPT-N values.

DRAFT

NOTES:
- ■ - 3.3-inch outside diam. split-barrel sampler
- ☒ - Disturbed sample (3.3-inch O.D.)
- ☐ - Sample lost during extraction
- ◪ - 2-inch outside diam. Standard Penetration Test split-spoon sampler
- I - Core run

DRIVING ENERGY: 140-lb. dropping 30 inches

LOG OF BORING

PGE Pacific Geotechnical Engineers, Inc.

PLATE A-1.1.2

PROJECT Haiku Road and Drainage Improvements JOB No. 1875-029

LOCATION Haiku, Maui, Hawaii DRAWN BY lml

BORING 2 (Page 1 of 1)

SURFACE ELEVATION +456 ± Feet

DATUM Mean Sea Level

LAB DATA		CORE INFO							
MOISTURE CONTENT %	DRY DENSITY (pcf)	CORE TYPE	RECOVERY %	RQD %	BLOWS/FT.	DEPTH (feet)	SAMPLES	SOIL CLASS	DESCRIPTION
49	73				5			ML	Dark brown sandy silt, soft, moist (younger alluvium)
						5			(Water level at 1430 hours on 07-30-10)
28	99				76			GM	Dark brown, gray, and reddish yellow silty basaltic gravel, dense, subrounded to rounded, highly weathered, with basaltic sand and soft basaltic cobbles, saturated (younger alluvium)
24	110				75				grades gray
								ML	Gray and dark reddish brown sandy silt, stiff to very stiff, with highly weathered basaltic sand, saturated (saprolite)
						10			
38					16				
						15			grades hard
25	108				52				
									Gray basalt, soft, highly weathered
					155/4"	20			

Boring completed at 20.3 feet on 07-31-10.

Note: The blow counts for the 3.3-inch diameter split barrel sampler represent actual blow counts and have not been converted to equivalent SPT-N values.

DRAFT

NOTES:
- ■ - 3.3-inch outside diam. split-barrel sampler
- ☒ - Disturbed sample (3.3-inch O.D.)
- □ - Sample lost during extraction
- ◪ - 2-inch outside diam Standard Penetration Test split-spoon sampler
- I - Core run

DRIVING ENERGY: 140-lb. dropping 30 inches

LOG OF BORING

PGE Pacific Geotechnical Engineers, Inc.

PLATE A-1.2

PROJECT *Haiku Road and Drainage Improvements* JOB No. *1875-029*

LOCATION *Haiku, Maui, Hawaii* DRAWN BY *lml*

BORING 3 (Page 1 of 1)

SURFACE ELEVATION *+458* ± Feet

DATUM *Mean Sea Level*

LAB DATA		CORE INFO							
MOISTURE CONTENT %	DRY DENSITY (pcf)	CORE TYPE	RECOVERY %	RQD %	BLOWS/FT.	DEPTH (feet)	SAMPLES	GRAPHIC LOG	SOIL CLASS	DESCRIPTION
35	68				2/8"				GP ML	Grayish brown and reddish yellow poorly graded basaltic gravel, with subrounded to rounded, with basaltic sand and cobbles, moist (younger alluvium)
										Dark brown to yellowish red sandy silt, soft, with highly to completely weathered basaltic sand, moist (younger alluvium)
					16	5				grades stiff and with soft basaltic cobbles
									GM	(Water level at 0900 hours on 08-01-10)
26					60/6"					Grayish brown to reddish yellow silty basaltic gravel, dense, subrounded to rounded, with basaltic sand and basaltic cobbles, saturated (younger alluvium)
		NX	85	0					ML	grades with hard basaltic cobbles
40	84				103	10				Mottled grayish brown and dark yellowish brown sandy silt, hard, saturated (saprolite)
26	101				20	15				grades stiff
										Gray basalt, soft, highly weathered
					51/2"	20				

Boring completed at 20.6 feet on 08-01-10.

Note: The blow counts for the 3.3-inch diameter split barrel sampler represent actual blow counts and have <u>not</u> been converted to equivalent SPT-N values.

DRAFT

NOTES:
- ■ - 3.3-inch outside diam. split-barrel sampler
- ☒ - Disturbed sample (3.3-inch O.D.)
- □ - Sample lost during extraction
- ◪ - 2-inch outside diam. Standard Penetration Test split-spoon sampler
- I - Core run

DRIVING ENERGY: 140-lb. dropping 30 inches

LOG OF BORING

PGE Pacific Geotechnical Engineers, Inc.

PLATE A-1.3

UNIFIED SOIL CLASSIFICATION SYSTEM – (ASTM D2487)

MAJOR DIVISIONS			LETTER SYMBOL	GRAPHIC SYMBOL	GROUP NAMES
COARSE–GRAINED SOILS MORE THAN 50% RETAINED ON NO. 200 SIEVE	GRAVELS MORE THAN 50% OF COARSE FRACTION RETAINED ON NO. 4 SIEVE	CLEAN GRAVELS LESS THAN 5% FINES	GW		WELL–GRADED GRAVEL, WELL–GRADED GRAVEL WITH SAND
			GP		POORLY–GRADED GRAVEL, POORLY–GRADED GRAVEL WITH SAND
		GRAVELS WITH MORE THAN 12% FINES	GM		SILTY GRAVEL, SILTY GRAVEL WITH SAND
			GC		CLAYEY GRAVEL, CLAYEY GRAVEL WITH SAND
	SANDS 50% OR MORE OF COARSE FRACTION PASSES NO. 4 SIEVE	CLEAN SAND LESS THAN 5% FINES	SW		WELL–GRADED SAND, WELL–GRADED SAND WITH GRAVEL
			SP		POORLY–GRADED SAND, POORLY–GRADED SAND WITH GRAVEL
		SANDS WITH MORE THAN 12% FINES	SM		SILTY SAND, SILTY SAND WITH GRAVEL
			SC		CLAYEY SAND, CLAYEY SAND WITH GRAVEL
FINE–GRAINED SOILS 50% OR MORE PASSES NO. 200 SIEVE	SILTS AND CLAYS LIQUID LIMIT LESS THAN 50		ML		SILT, SILT WITH SAND OR GRAVEL, SANDY OR GRAVELLY SILT
			CL		LEAN CLAY, LEAN CLAY WITH SAND OR GRAVEL, SANDY OR GRAVELLY LEAN CLAY
			OL		ORGANIC SILT OR CLAY, ORGANIC SILT OR CLAY WITH SAND OR GRAVEL, SANDY OR GRAVELLY ORGANIC SILT OR CLAY
	SILTS AND CLAYS LIQUID LIMIT 50 OR MORE		MH		ELASTIC SILT, ELASTIC SILT WITH SAND OR GRAVEL, SANDY OR GRAVELLY ELASTIC SILT
			CH		FAT CLAY, FAT CLAY WITH SAND OR GRAVEL, SANDY OR GRAVELLY FAT CLAY
			OH		ORGANIC SILT OR CLAY, ORGANIC SILT OR CLAY WITH SAND OR GRAVEL, SANDY OR GRAVELLY ORGANIC SILT OR CLAY
HIGHLY ORGANIC SOILS			PT		PEAT

NOTE:
DUAL SYMBOLS ARE USED TO INDICATE BORDERLINE CLASSIFICATIONS. REFER TO ASTM D2487 FOR BORDERLINE CLASSIFICATIONS GW–GM, GW–GC, GP–GM, GP–GC, SW–SM, SW–SC, SP–SM, AND SP–SC.

UNIFIED SOIL CLASSIFICATION SYSTEM

(SHEET 1 OF 2)

Pacific Geotechnical Engineers, Inc.

PLATE A-2.1

C:\cadd forms & accessories\forms\uscs3.dwg, Layout1, 4/8/2011 3:46:03 PM

GRADATION CHART

MATERIAL SIZE	PARTICLE SIZE			
	LOWER LIMIT		UPPER LIMIT	
	MILLIMETERS	SIEVE SIZE **	MILLIMETERS	SIEVE SIZE **
SAND				
FINE	0.075	#200 **	0.425	#40 **
MEDIUM	0.425	#40 **	2.00	#10 **
COARSE	2.00	#10 **	4.75	#4 **
GRAVEL				
FINE	4.75	#4 **	19.0	3/4" *
COARSE	19.0	3/4" *	75.0	3" *
COBBLES	75.0	3" *	300	12" *
BOULDERS	300	12" *	---	---

** U.S. STANDARD SIEVE * SQUARE OPENINGS

PLASTICITY CHART

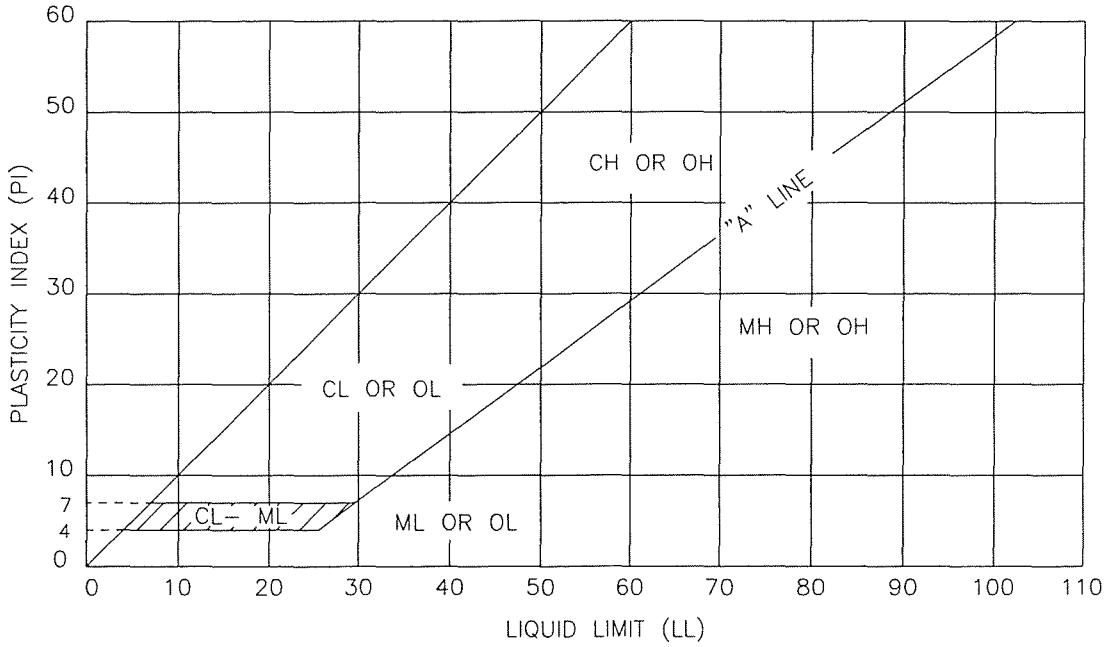

FOR CLASSIFICATION OF FINE-GRAINED SOILS
AND FINE-GRAINED FRACTION OF
COARSE-GRAINED SOILS

NOTE:
WHEN SHOWN ON THE BORING LOGS, THE FOLLOWING TERMS ARE USED TO DESCRIBE THE CONSISTENCY OF FINE-GRAINED SOILS AND COARSE-GRAINED SOILS.

FINE-GRAINED SOILS

APPROXIMATE SHEAR STRENGTH IN KSF

VERY SOFT	LESS THAN 0.25
SOFT	0.25 TO 0.5
MEDIUM STIFF	0.5 TO 1.0
STIFF	1.0 TO 2.0
VERY STIFF	2.0 TO 4.0
HARD	GREATER THAN 4.0

COARSE-GRAINED SOILS

VERY LOOSE	THESE ARE USUALLY
LOOSE	BASED ON AN EXAMINATION
MEDIUM DENSE	OF SOIL SAMPLES, AND
DENSE	PENETRATION RESISTANCE.
VERY DENSE	

UNIFIED SOIL CLASSIFICATION SYSTEM

(SHEET 2 OF 2)

Pacific Geotechnical Engineers, Inc.

PLATE A-2.2

C:\cadd forms & accessories\forms\uscs4.dwg, Layout1, 4/8/2011 3:47:05 PM

ROCK DESCRIPTION SYSTEM

A. DEGREE OF WEATHERING

The following terms describe the chemical weathering of a rock:

Fresh: No visible sign of decomposition or discoloration. Rings under hammer impact.

Slightly Weathered: Slight discoloration inwards from open fractures, otherwise similar to Fresh.

Moderately Weathered: Discoloration throughout. Weaker minerals such as feldspar decomposed. Strength somewhat less than fresh rock but cores cannot be broken by hand or scraped by knife. Texture preserved.

Highly Weathered: Most minerals somewhat decomposed. Specimens can be broken by hand with effort or shaved with knife. Core stones present in rock mass. Texture becoming indistinct but fabric preserved.

Completely Weathered: Minerals decomposed to soil but fabric and structure preserved (Saprolite). Specimens easily crumbled or penetrated.

Residual Soil: Advanced state of decomposition resulting in plastic soils. Rock fabric and structure completely destroyed. Large volume change relative to fresh rock.

B. HARDNESS

The following terms describe the resistance of a rock to indentation or scratching:

Very Soft: Can be peeled with a knife, material crumbles under firm blows with the sharp end of a geologic pick.

Soft: Can just be scraped with a knife, indentations of 2 to 4 mm with firm blows of the pick point.

Medium Hard: Cannot be scraped or peeled with a knife but can be scratched with knife point. Hand held specimen breaks with firm blows of the pick.

Hard: Difficult to scratch with knife point, cannot break hand held specimen.

Very Hard: Cannot be scratched with pocket knife.

C. ROCK FRACTURE CHARACTERISTICS

The following terms describe general fracture spacing of a rock:

Crushed: Less than 5 microns (mechanical clay) to 0.05 foot.

Intensely Fractured: 0.05 to 0.1 foot (contains no clay).

Highly Fractured: 0.1 to 0.5 feet.

Moderately Fractured: 0.5 to 1.0 feet

Occasionally Fractured: 1.0 to 3.0 feet

Slightly Fractured: Greater than 3.0 feet.

C:\cadd forms & accessories\rockdescription\rock description system.dwg, Layout1, 4/8/2011 3:48:06 PM

1875-029 core photos (2/02/2011)

Run #1 @ 8.0 feet

Possible Core Loss @ 9.7 – 10.0 feet

BORING 3

Run #1 at 8.0 – 10.0 feet

PRE-FINAL

PHOTOGRAPH OF ROCK CORE
Haiku Road and Drainage Improvements
Haiku, Maui, Hawaii

Pacific Geotechnical Engineers, Inc.

PLATE A-4

APPENDIX B

LABORATORY TESTING

GENERAL - To evaluate their engineering properties, selected soil samples obtained during the field exploration were subjected to laboratory moisture content and dry density determinations, Atterberg Limits tests, gradation tests, consolidation tests, a moisture-density relations test, a single point California Bearing Ratio test, strength tests, and an Expansion Index test. The tests and their results are described in the following paragraphs.

MOISTURE CONTENT AND DRY DENSITY - Relatively undisturbed selected soil samples were tested to measure their in-situ moisture contents and dry densities. The tests were performed in general accordance with ASTM D 2216 test method. Results of the moisture content and dry density determinations are presented on the Logs of Borings, Plates A-1.1.1 through A-1.3, at the respective sample depths.

ATTERBERG LIMITS – Six (6) Atterberg Limits tests were performed on selected soil samples in general accordance with ASTM D 4318 test method. The test results are presented on Plates B-1.1 and B-1.2.

GRADATION ANALYSIS – Three (3) gradation tests were performed on selected soil samples in general accordance with ASTM D 422 test method to evaluate grain size distribution. The test results are presented on Plate B-2.

CONSOLIDATION TESTS – Two (2) consolidation tests were performed on selected soil samples in general accordance with ASTM D 2435 test method. The results of the consolidation tests are presented on Plates B-3.1 and B-3.2.

MOISTURE-DENSITY RELATIONS – One moisture-density relations test was performed on a bulk sample of the near surface soil in general accordance with ASTM D 1557 test method. The test results are presented on Plate B-4.

CALIFORNIA BEARING RATIO (CBR) – One single point laboratory CBR test was performed on the bulk sample used in the moisture-density relations test in general accordance with ASTM D 1883 test procedure. The results of the CBR test are presented on Plate B-5.

SHEAR STRENGTH – Six (6) shear strength tests were performed on relatively undisturbed soil samples to evaluate their shear strength properties. The triaxial tests were performed under unconsolidated, undrained triaxial (TX/UU) conditions in general accordance with ASTM D 2850 test method. The tests were performed on the samples at their field moisture contents. Total stress properties were measured in these tests. The results of the strength tests are summarized in Table B-1.

EXPANSION INDEX (EI) TEST – One EI test was performed on the bulk sample used in the moisture-density relations test in general accordance with ASTM D 4829 test procedure. The results of the EI test are presented on Table B-2.

- o0o -

The following plates and tables are attached and complete this appendix.

Plates B-1.1 and B-1.2	-	Atterberg Limits
Plates B-2	-	Gradation Curves
Plates B-3.1 and B-3.2	-	Consolidation Test Data
Plate B-4	-	Compaction Test Data
Plate B-5	-	Laboratory California Bearing Ratio (CBR) Test Results
Table B-1	-	Shear Strength Test Results
Table B-2	-	Expansion Index Test Results

PROJECT Haiku Road and Drainage Improvements JOB NUMBER 1875-029

LOCATION Haiku, Maui, Hawaii DRAWN BY lml DATE DRAWN 08-17-10

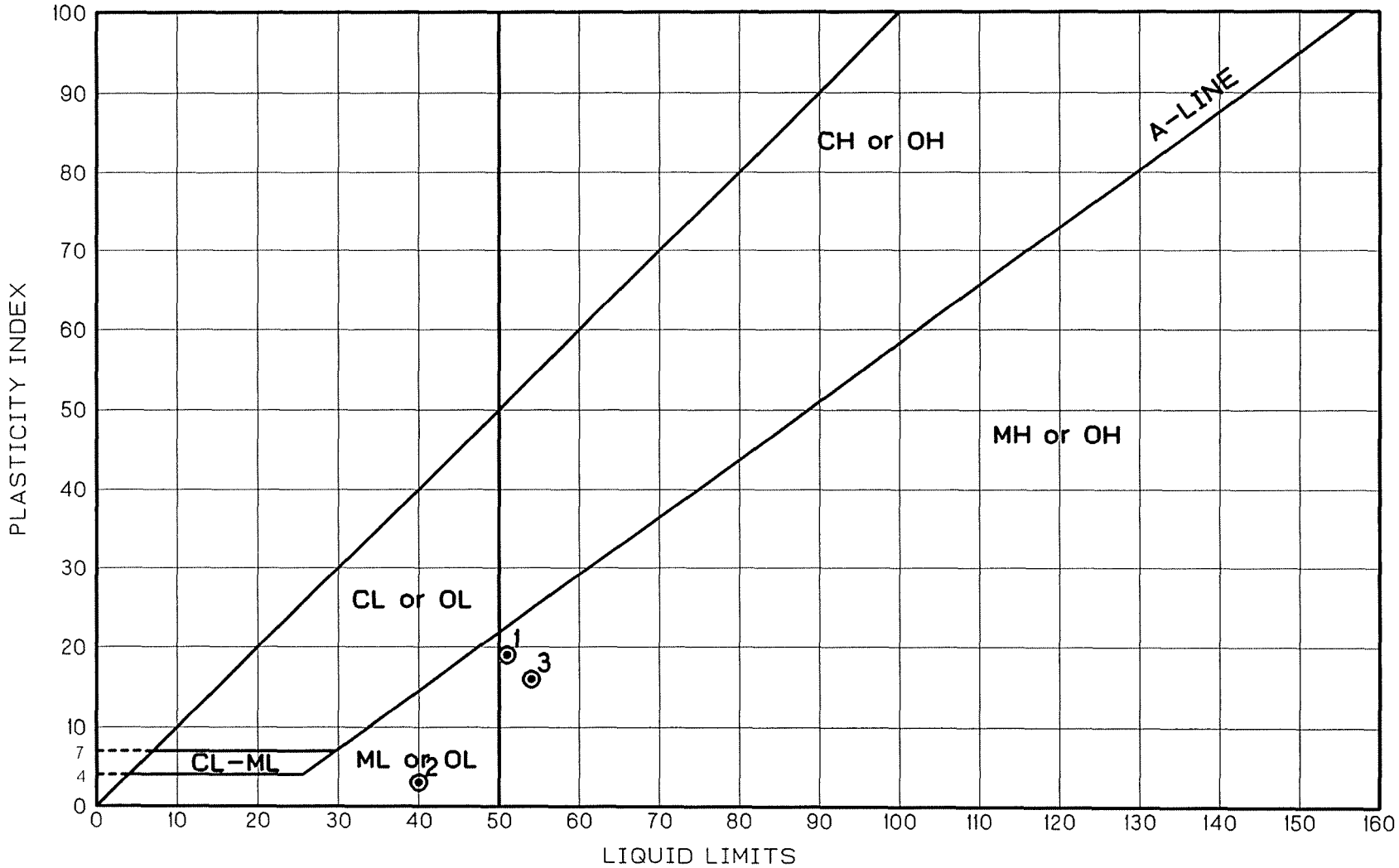

ATTERBERG LIMITS

KEY	LOCATION	SAMPLE DEPTH (ft)	LIQUID LIMIT	PLASTICITY INDEX
1	Boring 1	9.4	51	19
2	Boring 1	29.7	40	3
3	Boring 1	44.2	54	16

DRAFT

PROJECT Haiku Road and Drainage Improvements JOB NUMBER 1875-029
LOCATION Haiku, Maui, Hawaii DRAWN BY lml DATE DRAWN 08-17-10

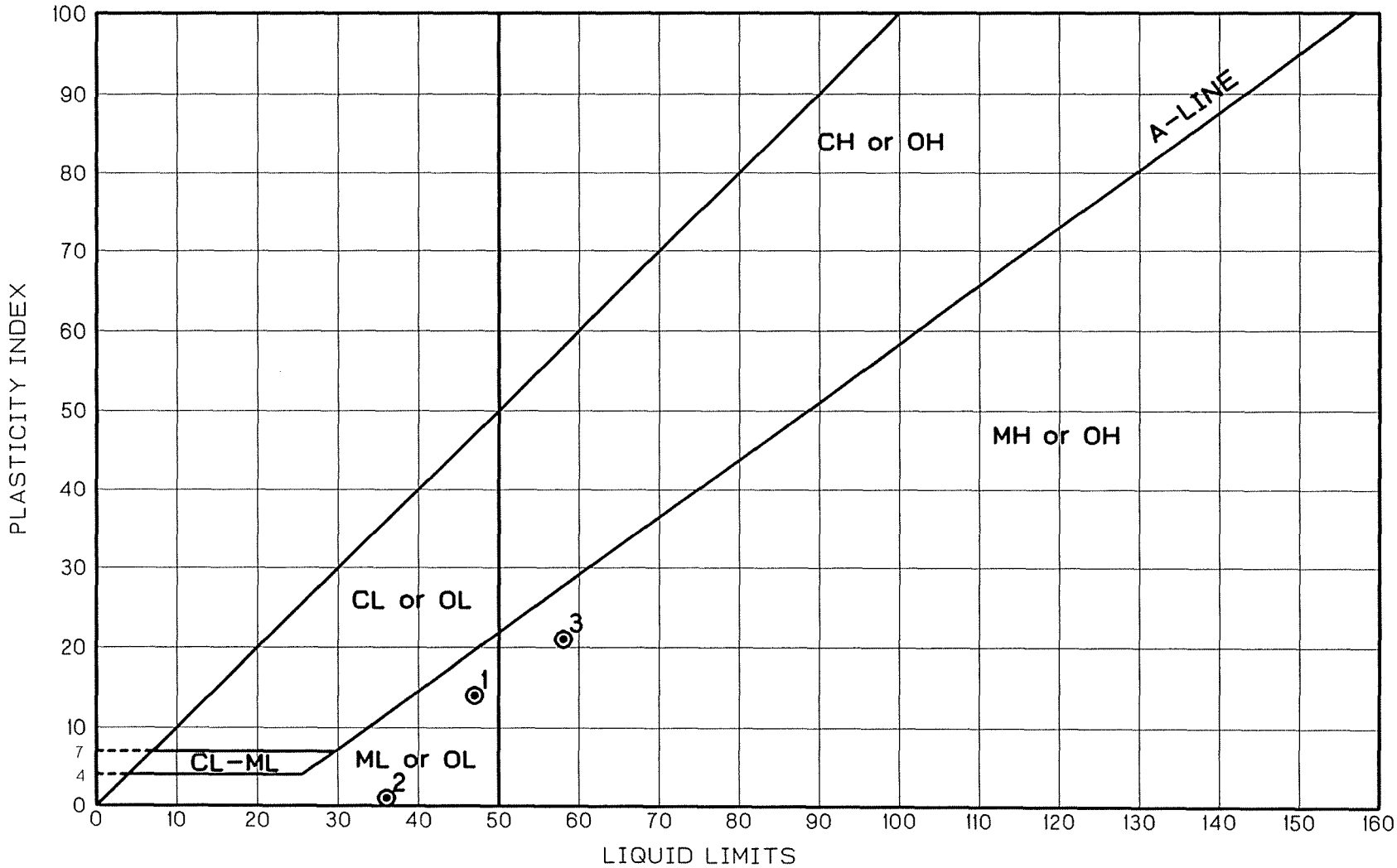

ATTERBERG LIMITS

KEY	LOCATION	SAMPLE DEPTH (ft)	LIQUID LIMIT	PLASTICITY INDEX
1	Boring 2	2.2	47	14
2	Boring 3	15.3	36	1
3	Bulk 1	0.3 - 1.0	58	21

DRAFT

PROJECT Haiku Road and Drainage Improvements JOB NUMBER 1875-029

LOCATION Haiku, Maui, Hawaii DRAWN BY lml DATE DRAWN 08/12/10

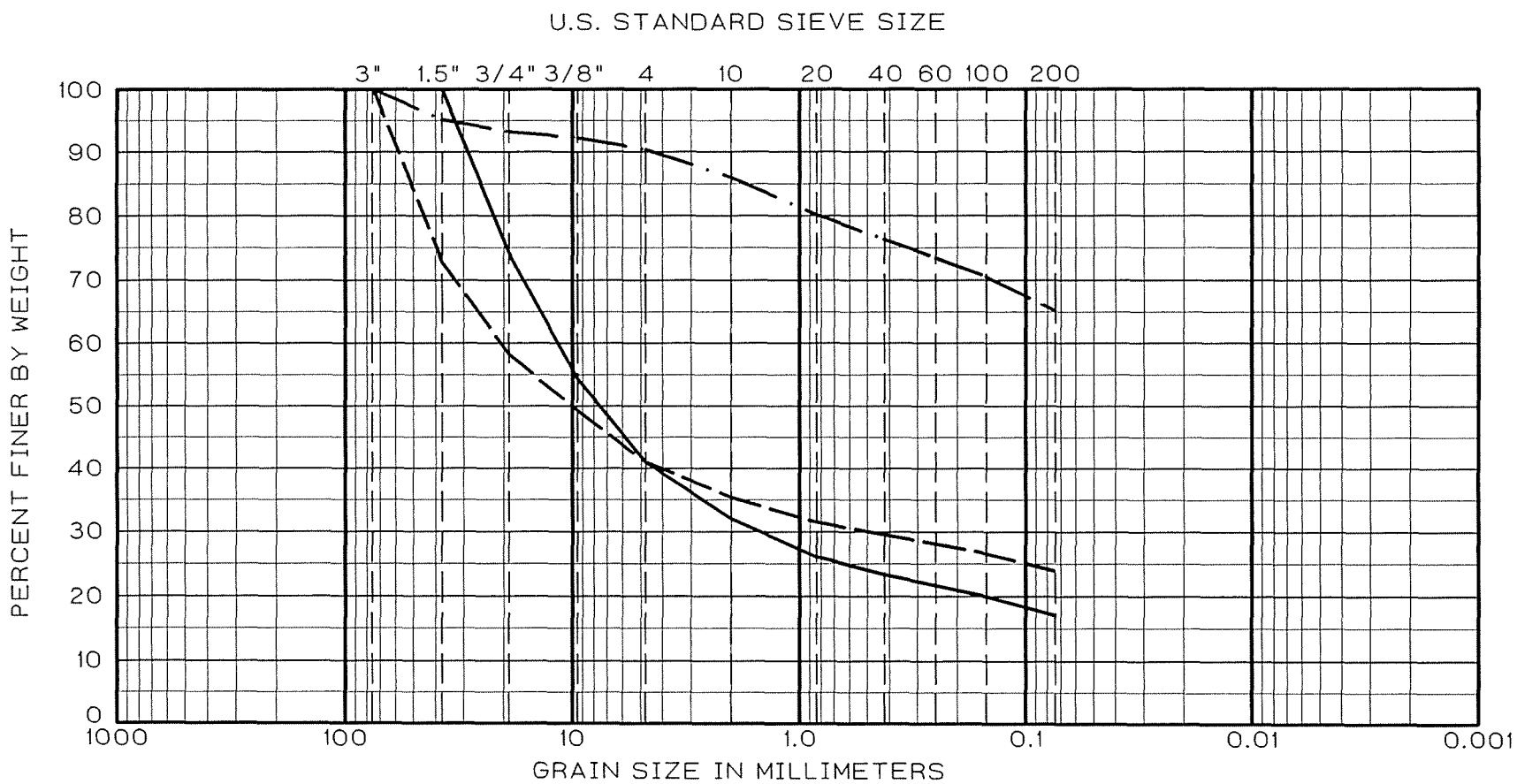

COBBLES	GRAVEL		SAND			SILT OR CLAY
	COARSE	FINE	COARSE	MEDIUM	FINE	

LOCATION	DEPTH (ft)	CLASSIFICATION		NAT. WC	LL	PL	PI	SYMBOL
Boring 2	5.3 - 8.1	GM	Dark brown, gray, and reddish yellow silty basaltic gravel with basaltic sand	29				
Boring 3	7.2	GM	Grayish brown to reddish yellow silty basaltic gravel with basaltic sand	26				
Bulk 1	0.3 - 1.0	MH	Dark brown sandy elastic silt	29	58	37	21	

DRAFT

GRADATION CURVE

Pacific Geotechnical Engineers, Inc.

PLATE B-2

PROJECT Haiku Road and Drainage Improvements JOB NUMBER 1875-029 DATE 08/17/10 DRAWN BY lml

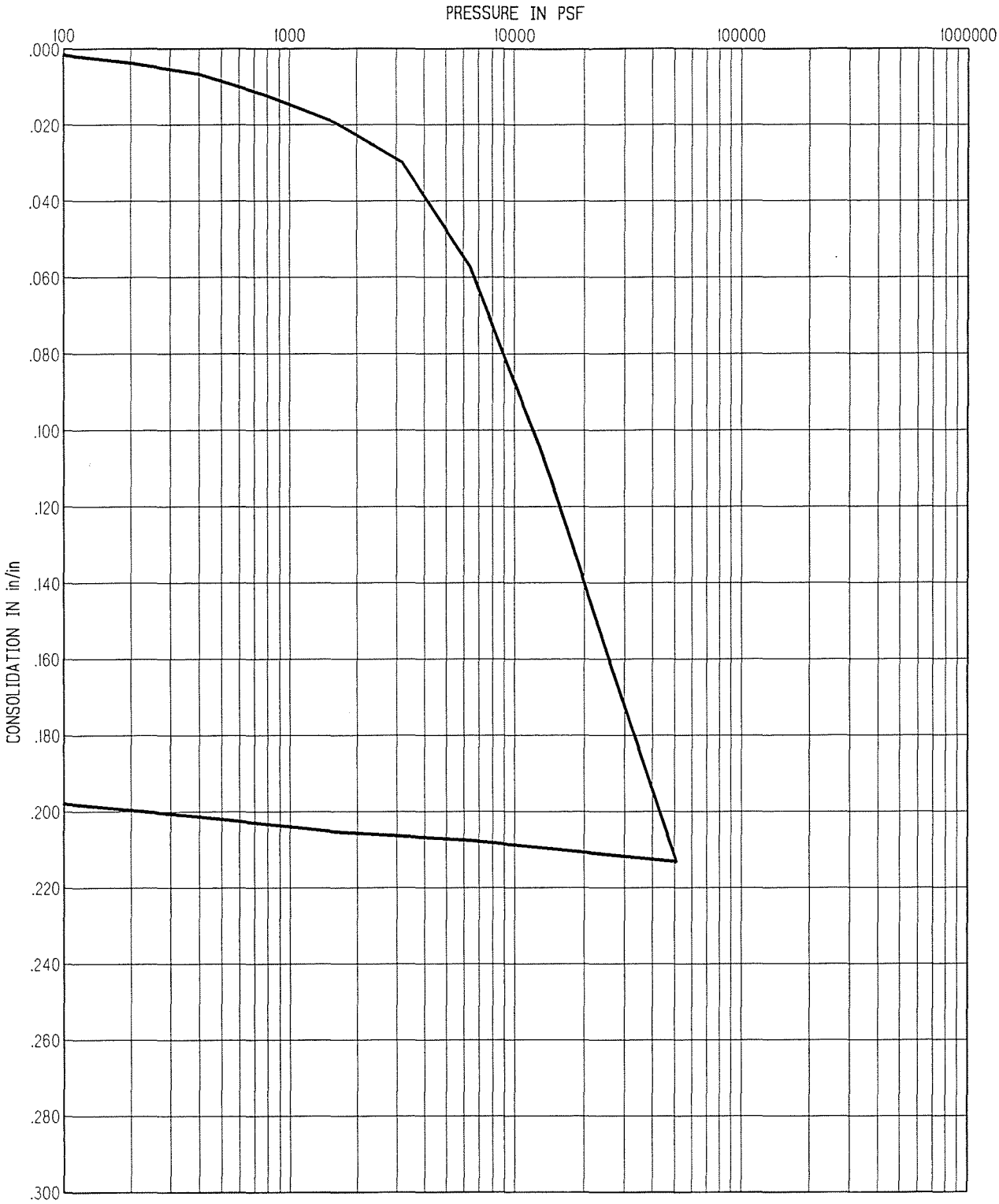

LOCATION	SAMPLE DEPTH (feet)	SOIL DESCRIPTION
Boring 2	2.2	Dark brown silt (ML)

	BEFORE TEST	AFTER TEST
MOISTURE CONTENT (%)	49	36
DRY DENSITY (pcf)	73	91

CONSOLIDATION TEST DATA

DRAFT

Pacific Geotechnical Engineers, Inc.

Plate B-3.1

PROJECT Haiku Road and Drainage Improvements JOB NUMBER 1875-029 DATE 08/17/10 DRAWN BY lml

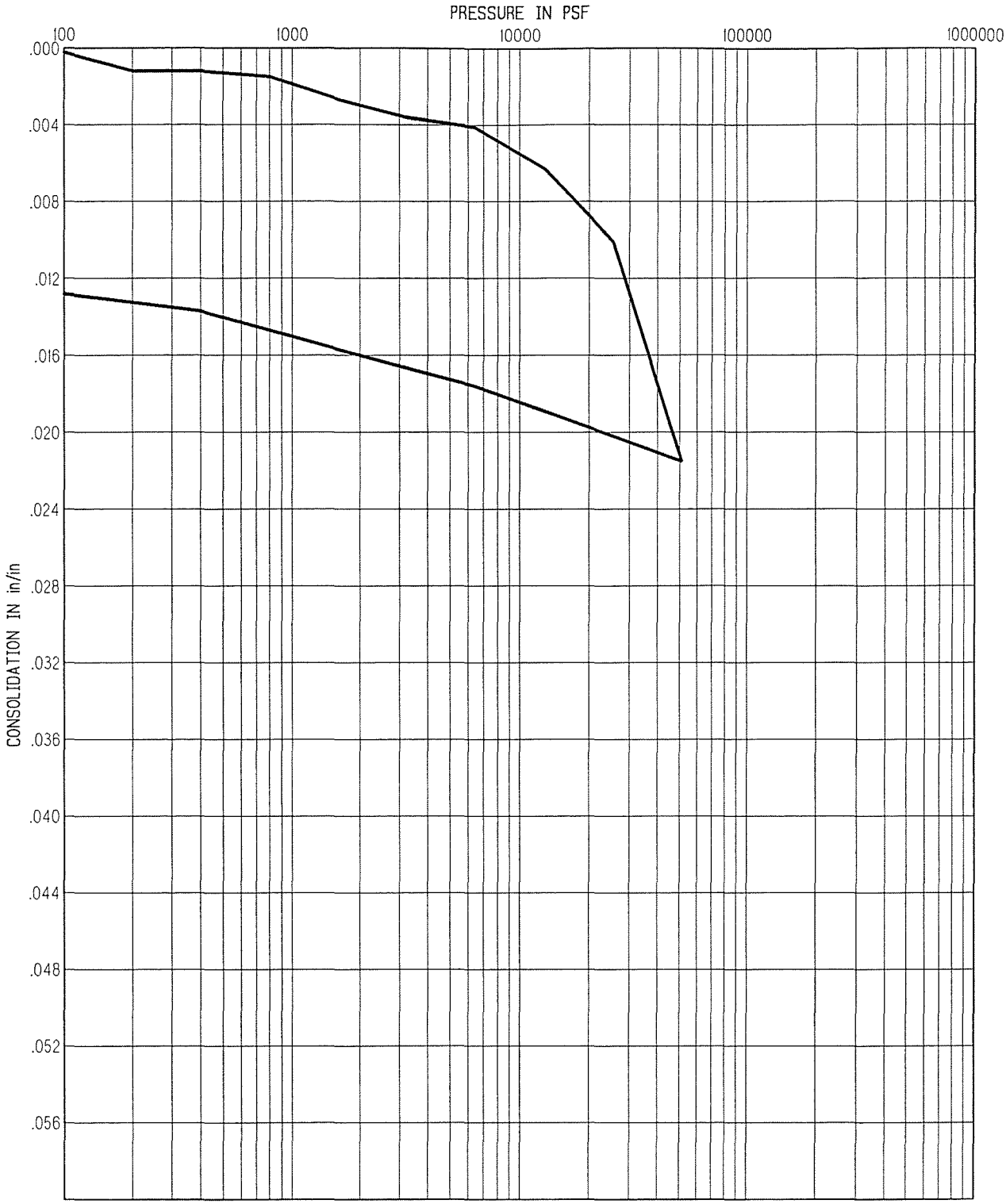

LOCATION	SAMPLE DEPTH (feet)	SOIL DESCRIPTION
Boring 3	15.3	Mott gry brn & drk yel brown silt (ML)

	BEFORE TEST	AFTER TEST
MOISTURE CONTENT (%)	26	26
DRY DENSITY (pcf)	101	102

CONSOLIDATION TEST DATA

DRAFT

Pacific Geotechnical Engineers, Inc.

Plate B-3.2

SAMPLE DEPTH 0.3 - 1.0 ft.
ELEVATION +490 ft.±
SOIL Dark brown sandy elastic silt (MH)
COMPACTION METHOD ASTM D 1557-02
OPTIMUM MOISTURE CONTENT 28.5 %
MAXIMUM DRY UNIT WEIGHT 97 pcf

JOB NUMBER: 1875-029
PROJECT: Haiku Road and Drainage Improvements
Haiku, Maui, Hawaii
DRAWN BY: lml (02/03/2011)

BULK 1

SAMPLE LOCATION: Near Boring 1

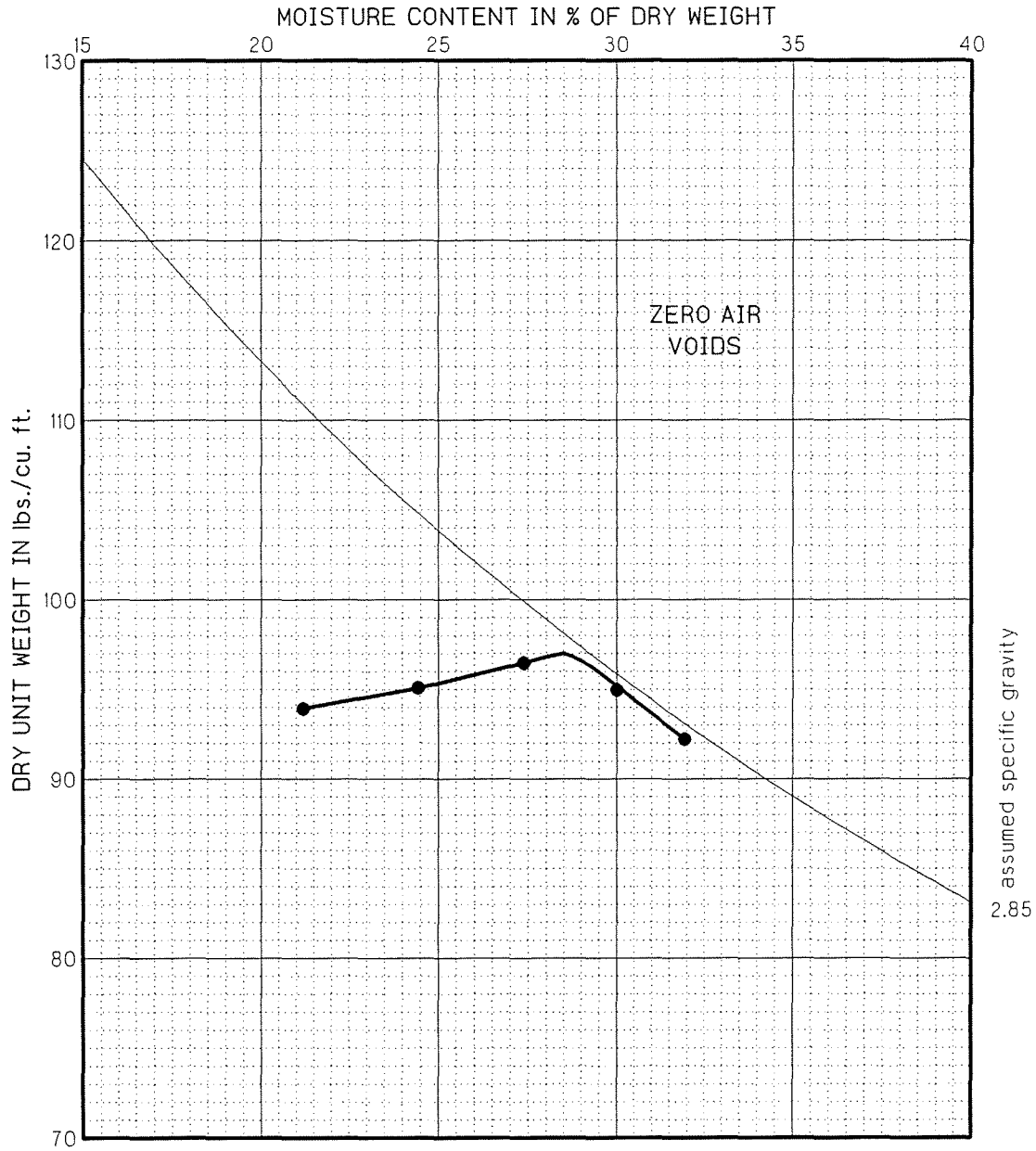

DRAFT

COMPACTION TEST DATA

Pacific Geotechnical Engineers, Inc.
PLATE B-4

PROJECT Haiku Road and Drainage Improvements JOB NUMBER 1875-029 DATE 08/19/10 DRAWN BY lml

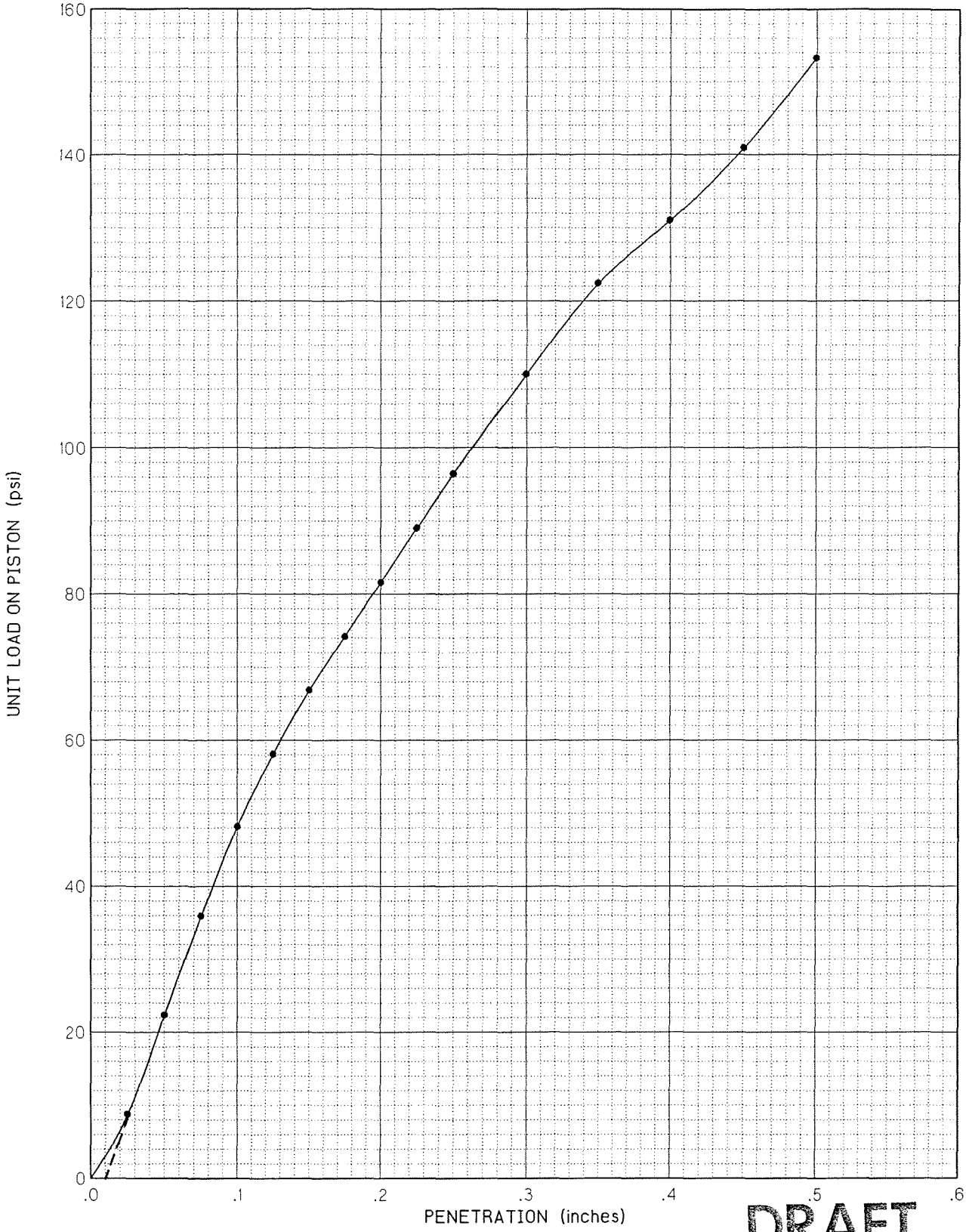

DRAFT

LABORATORY CALIFORNIA BEARING RATIO (CBR) TEST RESULTS

Bulk No.	Depth (ft)	Before Soaking		After Soaking			Laboratory CBR Value	
		Moisture Content (%)	Dry Unit Weight (pcf)	Moisture Content (%)	Dry Unit Weight (pcf)	% Swell	@ 0.1"	@ 0.2"
1 (Near B-1)	0.3 - 1.0	27	87	36	85	2.2	5	5

Soil Description (USCS) Dark brown sandy elastic silt (MH)

Test Method ASTM D 1883-07

Pacific Geotechnical Engineers, Inc.

TABLE B-1

SHEAR STRENGTH TEST RESULTS (Soil)
ASTM D 2850

Boring No.	Depth (feet)	Unified Soil Class.	Moisture Content (%)	Dry Density (pcf)	Confining Pressure (psf)	Peak Shear Strength (psf)	Test Type
1	9.4	MH	29.9	80.5	1,000	1,370	TX/UU
1	29.7	ML	39.8	80.2	2,500	5,170	TX/UU
1	34.7	ML	41.2	81.4	1,000	4,885	TX/UU
1	44.7	MH	44.8	78.9	2,000	1,670	TX/UU
2	2.6	ML	50.4	73.3	250	220	TX/UU
2	15.7	ML	29.1	97.2	500	7,625	TX/UU

Note: TX/UU - Unconsolidated undrained triaxial shear strength test.

TABLE B-2

EXPANSION INDEX TEST RESULTS
ASTM D 4829

Bulk No.	Depth (feet)	Specific Gravity	Unified Soil Class.	Before Test		After Test		Expansion Index (expansion potential)
				Moisture Content (%)	Dry Density (pcf)	Moisture Content (%)	Dry Density (pcf)	
1	0.3 – 1.0	2.9	MH	23	78	43	77	34 (low)

Note: Bulk No. 1 taken near Boring 1.

APPENDIX D.

Biological Resources Survey

BIOLOGICAL RESOURCES SURVEY

FOR THE

HAIKU ROAD AND CULVERT IMPROVEMENTS PROJECT

HAIKU, MAUI, HAWAII

by

ROBERT W. HOBDY
ENVIRONMENTAL CONSULTANT
Kokomo, Maui
April 2012

Prepared for:
Shimabukuro, Endo & Yoshizaki, Inc.

BIOLOGICAL RESOURCES SURVEY
HAIKU ROAD AND CULVERT IMPROVEMENTS
HAIKU, MAUI, HAWAII

INTRODUCTION

The County of Maui is proposing to make major improvements to a culvert drainage facility under Ha'ikū Road in Liliko'i Gulch, Ha'ikū, Maui (see Figure 1). This study is an assessment of the biological resources in the area, conducted in fulfillment of environmental requirements of the planning process.

SITE DESCRIPTION

The project is located in the narrow and steep-sided stream bottom of Liliko'i Gulch where it passes under Ha'ikū Road about 600 feet east of Kokomo Road junction at the old Ha'ikū Cannery. The gulch is a dense jungle with an overstory of 80 foot tall trees and an understory of shade-loving shrubs, vines and ferns. The stream is dry most of the time but can flow strongly following significant rainfall events. Annual rainfall averages around 60 inches (Armstrong, 1983). The soil is generally classified as rough broken land (rrR) (Foote et al, 1972). Project work will occur in the area at and directly downstream of Ha'ikū Road between the elevations of 460 feet and 490 feet above sea level.

SURVEY OBJECTIVES

This report summarizes the findings of flora and fauna survey for the Ha'ikū Road and Culvert Improvements project which was conducted in April 2012. The objectives of the survey were to:

1. Document what plant and animal species occur on the property or may likely occur in the existing habitat.

2. Document the status and abundance of each species.

3. Determine the presence or likely occurrence of any native flora and fauna, particularly any that are Federally listed as Threatened or Endangered. If such occur, identify what features of the habitat may be essential for these species.

4. Determine if the project area contains any special habitats which if lost or altered might result in a significant negative impact on the flora and fauna in this part of the island.

5. Note which aspects of the proposed development pose significant concerns for plants or for wildlife and recommend measures that would mitigate or avoid these problems.

BOTANICAL SURVEY REPORT

SURVEY METHODS

A walk-through botanical survey method was used covering this small gulch bottom site. An inventory of all plant species encountered was made, including notes on distribution and abundance. A special effort was made to identify any native species and any that might be rare or protected.

DESCRIPTION OF THE VEGETATION

The vegetation in this gulch bottom site consists of a dense windward, lowland forest made up primarily of large non-native species with an understory of large vines and shade-loving shrubs, herbs and ferns. Most common were the large trees, African tulip tree (*Spathodea campanulata*) and Chinese banyan (*Ficus microcarpa*); a large arborescent vine, golden pothos (*Epipremnum pinnatum*); and the widespread fern (*Christella parasitica*) which has no local common name. Just one native plant species was found on this site, the large indigenous vine kā'e'e (*Mucuna gigantea*) which is found throughout the tropical pacific growing up into trees in wet, lowland forests.

A total of 48 plant species were recorded during the survey, of which 47 were widespread non-native trees, shrubs, vines and ferns and an array of ornamental plantings.

DISCUSSION AND RECOMMENDATIONS

This project is located in a highly altered lowland forest that has been subject to intensive human activity including agriculture and grazing. The site is dominated by aggressive non-native species. Just one widespread native vine was recorded. No Endangered or Threatened plant species were found, nor were any seen that are candidates for such status.

Because of the above conditions in the project area it is determined that the proposed road and culvert improvements should create no significant negative impacts on the botanical resources in this part of Maui.

PLANT SPECIES LIST

Following is a checklist of all those vascular plant species inventoried during the field studies. Plant families are arranged alphabetically within each of three groups: Ferns, Monocots and Dicots. Taxonomy and nomenclature of the Ferns follow Palmer (2003); the flowering plants (Monocots and Dicots) are in accordance with Wagner et al. (1999) and Staples and Herbst (2005)..

For each species, the following information is provided:

1. Scientific name with author citation.

2. Common English or Hawaiian name.

3. Bio-geographical status. The following symbols are used:

   endemic = native only to the Hawaiian Islands; not naturally occurring anywhere else in the world.

   indigenous = native to the Hawaiian Islands and also to one or more other geographic area(s).

   non-native = all those plants brought to the islands intentionally or accidentally after western contact.

4. Abundance of each species within the project area:

   abundant = forming a major part of the vegetation within the project area.

   common = widely scattered throughout the area or locally abundant within a portion of it.

   uncommon = scattered sparsely throughout the area or occurring in a few small patches.

   rare = only a few isolated individuals within the project area.

COMMON NAME	SCIENTIFIC NAME	STATUS	ABUNDANCE
FERNS			
BLECHNACEAE (Chain Fern Family)			
Blechnum appendiculatum Willd.	palm fern	non-native	rare
POLYPODIACEAE (Polypody Fern Family)			
Phymatosorus grossus (Langsd. & Fisch.) Brownlie	*laua'e*	non-native	rare
PTERIDACEAE (Brake Fern Family)			
Adiantum hispidulum Sw.	rough maidenhair fern	non-native	uncommon
Adiantum raddianum C. Presl	*'iwa'iwa*	non-native	uncommon
THELYPTERIDACEAE (Marsh Fern Family)			
Christella parasitica (L.) H. Lev.	----------	non-native	common
MONOCOTS			
ARACEAE (Aroid Family)			
Dieffenbachia seguine (Jacq.) Schott	dumb cane	non-native	rare
Epipremnum pinnatum (L.) Engler f. *aureum*	golden pothos	non-native	common
Philodendron pinnatifidum (Jacq.) Schott	pinnatifid philodendron	non-native	uncommon
Syngonium podophyllum Schott	syngonium	non-native	uncommon
Xanthosoma robustum Schott	'ape	non-native	uncommon
ARECACEAE (Palm Family)			
Caryotis mitis Loureiro	fishtail palm	non-native	rare
Veitchia joanis Wendland	joanis palm	non-native	rare
Veitchia merrillii (Becc.) Moore	Manila palm	non-native	uncommon
ASPARAGACEAE (Asparagus Family)			
Dracaena fragrans (L.) Ker Gawler	fragrant dracaena	non-native	rare
COMMELINACEAE (Dayflower Family)			
Dichorisandra thyrsiflora (Jacq.) Schott	blue ginger	non-native	rare
Tradescantia sp.	----------	non-native	uncommon
HELICONIACEAE (Heliconia Family)			
Heliconia bihai (L.) L.	lobster-claw	non-native	uncommon
POACEAE (Grass Family)			
Bambusa vulgaris Wendland	common bamboo	non-native	uncommon
Eleusine indica (L.) Gaertn.	wiregrass	non-native	rare
Eragrostis pectinacea (Michx.) Nees	Carolina lovegrass	non-native	rare
Pennisetum purpureum Schumacher	Napier grass	non-native	uncommon
Setaria palmifolia (J.Konig) Stapf	palm grass	non-native	uncommon
ZINGIBERACEAE (Ginger Family)			
Etlingera elatior (Jack) R.M. Smith	torch ginger	non-native	rare
DICOTS			
APOCYNACEAE (Dogbane Family)			
Stemmadenia littoralis (Kunth) P. Alorge	lechoso	non-native	uncommon
ASTERACEAE (Sunflower Family)			
Calyptocarpus vialis Less.	----------	non-native	rare

COMMON NAME	SCIENTIFIC NAME	STATUS	ABUNDANCE
Elephantopus mollis Kunth	Elephant's foot	non-native	rare
Sigesbeckia orientalis L.	small yellow crown-beard	non-native	uncommon
Synedrella nodiflora (L.) Gaertn.	nodeweed	non-native	rare
Youngia japonica (L.) DC.	oriental hawskbeard	non-native	uncommon
BIGNONIACEAE (Bignonia Family)			
Spathodea campanulata P. Beauv.	African tulip tree	non-native	common
FABACEAE (Pea Family)			
Adenanthera pavonina L.	circassian bean	non-native	rare
Leucaena leucocephala (Lam.) de Wit	*koa haole*	non-native	uncommon
Mucuna gigantea (Willd.) DC.	*kā'e'e*	indigenous	uncommon
LAURACEAE (Laurel Family)			
Persea americana Mill.	avocado	non-native	uncommon
MALVACEAE (Mallow Family)			
Malvastrum coromandelianum (L.) Garcke	false mallow	non-native	rare
MELASTOMATACEAE (Melastoma Family)			
Clidemia hirta (L.) D. Don	Koster's curse	non-native	uncommon
MORACEAE (Fig Family)			
Ficus elastica Hornemann	India rubber tree	non-native	rare
Ficus microcarpa L. fil.	Chinese banyan	non-native	common
MYRTACEAE (Myrtle Family)			
Syzygium cumini (L.) Skeels	Java plum	non-native	uncommon
OXALIDACEAE (Wood Sorrel Family)			
Oxalis corniculata L.	*'ihi*, yellow wood sorrel	Polynesian	rare
PASSIFLORACEAE (Passion Flower Family)			
Passiflora edulis Sims	passion fruit, *liliko'i*	non-native	rare
PHYLLANTHACEAE (Phyllanthus Family)			
Phyllanthus tenellus Roxb.	----------	non-native	rare
PLANTAGINACEAE (Plantain Family)			
Plantago lanceolata L.	narrow-leaved plantain	non-native	rare
Plantago major L.	broad-leaved plantain, *laukahi*	non-native	rare
ROSACEAE (Rose Family)			
Rubus rosifolius Sm.	thimbleberry	non-native	rare
RUBIACEAE (Coffee Family)			
Coffea arabica L.	Arabian coffee	non-native	uncommon
SAPOTACEAE (Sapodilla Family)			
Chrysophyllum mexicanum T. Brandegee	Mexican satinleaf	non-native	uncommon
SOLANACEAE (Nightshade Family)			
Brugmansia x *candida* Persoon	angel's trumpet, nānāhonua	non-native	rare

FAUNA SURVEY REPORT

SURVEY METHODS

A fauna survey was conducted at the same time as the botanical survey. Observations were made using binoculars and listening to vocalizations. Notes were made on species abundance, activities and location as well as observations of trails, tracks, scat and signs of feeding. In addition an evening visit was made to the area to record crepuscular activities and vocalizations and to see if there was any evidence of occurrence of the Hawaiian hoary bat *(Lasiurus cinereus semotus)* in the area.

RESULTS

MAMMALS

Just two mammal species were observed in the project area during the course of the survey. The dense vegetation made it hard to observe small ground dwelling mammals. Taxonomy and nomenclature follow Tomich (1986).

Domestic dog (*Canis familiaris*) – Dogs from surrounding residential areas occasionally wander into this gulch.

Roof rat (*Rattus rattus*) – Rats were seen running along tree limbs during the evening survey. Rats become active during evening hours.

Other mammals that no doubt utilize this property but were not seen include mice (*Mus domesticus,* mongoose (*Herpestes auropunctatus*) and cats (*Felis catus*). Mice feed on seeds, fruits and succulent vegetation, while the mongoose and cats hunt for these rodents and birds.

A special effort was made to look for the Hawaiian hoary bat by making an evening survey of the area. When present in an area these bats can be easily identified as they forage for insects, their distinctive flight patterns clearly visible in the glow of twilight. No evidence of such activity was observed though visibility was excellent. In addition a bat detection device (Batbox IIID) was employed, set to the frequencies of 27,000 to 28,000 Hertz that these bats are known to utilize for echolocation. No bats were detected using this device.

BIRDS

Birdlife was moderate in both species and in numbers. The dense forest is not ideal for many ground-feeding birds species. Just seven species were observed during two site visits to the area. Taxonomy and nomenclature follow American Ornithologists' Union (2011).

The only species that was observed to be common here was the zebra dove (*Geopelia striata*) which was seen and heard frequently. The other six species were uncommon or rare in occurrence.

There are a variety of other small non-native birds that might occasionally be seen on this property including house sparrow, nutmeg manikin and cattle egret. This property, however, is not suitable for Hawaii's native forest birds which are presently restricted to native forest habitats at higher elevations, or for ground nesting native seabirds such as the Threatened Newells' shearwater (*Puffinus newelli*) and the Endangered Hawaiian petrel (*Pterodroma sandwichensis*) that dig their burrows on high mountain ridges.

INSECTS

Insect life was rather sparse in species observed due to the small area and dense forest habitat. Just 5 species were recorded during the survey. Taxonomy and nomenclature follow Nishida et al (1992). Three species were found to be common: the Asian spiny-backed spider (*Gasteracantha mammosa*), the Argentine ant (*Linepithema humile*) and the Forest day mosquito (*Aedes albopictus*).

No native insects were seen and none that are listed as Endangered or Threatened.

No reptiles or mollusks were seen during the survey.

DISCUSSION AND RECOMMENDATIONS

Just a few wildlife species were found on this small gulch bottom site in the heart of Ha'ikū Town. Of the two mammals, seven bird species and five insects seen during the survey, all were common non-native species that are of no particular environmental concern. There were no Endangered or Threatened native wildlife species found, and there were no special habitats for such species found either.

The proposed road and culvert improvements are not expected to have a significant negative impact on any fauna resources in this part of Maui. No recommendations regarding wildlife are deemed appropriate or necessary.

ANIMAL SPECIES LIST

Following is a checklist of the animal species inventoried during the field work. Animal species are arranged in descending abundance within three groups: Mammals, Birds and Insects. For each species the following information is provided:

1. Common name

2. Scientific name

3. Bio-geographical status. The following symbols are used:

   endemic = native only to Hawaii; not naturally occurring anywhere else in the world.
   indigenous = native to the Hawaiian Islands and also to one or more other geographic area(s).
   non-native = all those animals brought to Hawaii intentionally or accidentally after western contact.
   migratory = spending a portion of the year in Hawaii and a portion elsewhere. In Hawaii the migratory birds are usually in the overwintering/non-breeding phase of their life cycle.

4. Abundance of each species within the project area:

   abundant = many flocks or individuals seen throughout the area at all times of day.
   common = a few flocks or well scattered individuals throughout the area.
   uncommon = only one flock or several individuals seen within the project area.
   rare = only one or two seen within the project area.

COMMON NAME	SCIENTIFIC NAME	STATUS	ABUNDANCE
MAMMALS			
Domestic dog	*Canis familiaris* L.	non-native	rare
Roof rat	*Rattus rattus* L.	non-native	rare
BIRDS			
Zebra dove	*Geopelia striata* L.	non-native	common
Northern cardinal	*Cardinalis cardinalis* L.	non-native	uncommon
Spotted dove	*Streptopelia chinensis* Scopoli	non-native	uncommon
Red-crested cardinal	*Paroaria coronata* Miller	non-native	uncommon
House finch	Carpodacus mexicanus Muller	non-native	uncommon
Common myna	*Acridotheres tristis* L.	non-native	rare
Chicken	*Gallus gallus* L.	non-native	rare
INSECTS			
ORDER - ARANAE true spiders			
ARANEIDAE (Orb Weaver Family)			
Asian spiny-backed spider	*Gasteracantha mammosa* Koch	non-native	common
DYSERIDAE (Woodlouse Spider Family)			
Woodlouse spider	*Dysera crocota* Koch	non-native	rare
ORDER - DIPTERA flies			
CULICIDAE (Mosquito Family)			
Forest day mosquito	*Aedes albopictus* Skuse	non-native	common
ORDER - HYMENOPTERA bees, wasps & ants			
FORMICIDAE (Ant Family)			
Argentine ant	*Linepithema humile* Mayr	non-native	common
ORDER - ISOPODA Sow bugs			
PORCELLIONIDAE (Sow Bug Family)			
Sow bug	*Porcellio laevis* Latreille	non-native	uncommon

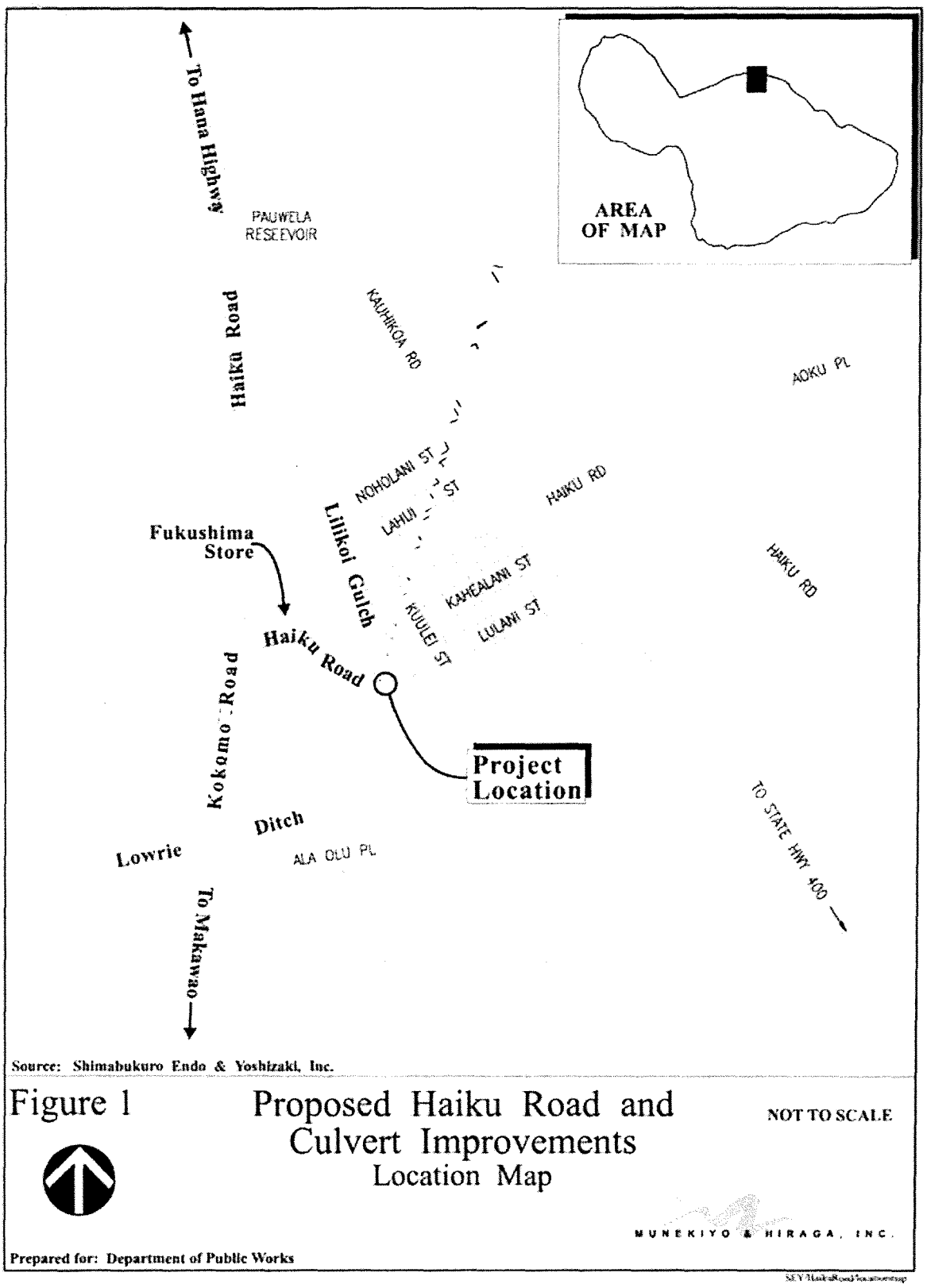

Project Area

LITERATURE CITED

American Ornithologist's Union 2011. Check-list of North American Birds. 7th edition. American Ornithologists' Union. Washington D.C.

Armstrong, R. W. (ed.) 1983. Atlas of Hawaii. (2nd. ed.) University of Hawaii Press.

Foote, D.E. , E.L. Hill, S. Nakamura, and F. Stephens. 1972. Soil survey of the islands of Kauai, Oahu, Maui, Molokai, and Lanai, State of Hawaii. U.S. Dept. of Agriculture, Soil Conservation Service. Washington, D.C.

Nishida, G.M., Samuelson, G.A., Strazanac, J.S. and Kami, K.S. 1992. Hawaiian Terrestrial Anthropod Checklist. Hawaii Biological Survey, Honolulu, Hawaii.

Palmer, D.D. 2003 Hawai'i's Ferns and Fern Allies. University of Hawaii Press, Honolulu.

Staples, G.W. and D.R. Herbst. 2005, A Tropical Garden Flora – Plants Cultivated in the Hawaiian Islands and Other Tropical Places. Bishop Museum Press, Honolulu.

Tomich, P.Q. 1986. Mammals in Hawaii. Bishop Museum Press, Honolulu.

U.S. Fish and Wildlife Service. 1999. Endangered and threatened wildlife and Plants. 50 CFR 17.11 & 17.12

Wagner, W. L., D.R. Herbst, and S. H. Sohmer. 1999. Manual of the flowering plants of Hawai'i. Univ. of Hawai'I Press and Bishop Museum Press. Honolulu.

APPENDIX E.

Archaeological Assessment Survey Report

AN ARCHAEOLOGICAL ASSESSMENT FOR A C. 8,500 SQUARE FOOT PORTION OF LAND, HAIKU ROAD AND CULVERT IMPROVEMENT, HAIKU *AHUPUA`A*, MAKAWAO DISTRICT, ISLAND OF MAUI

(COUNTY DPW JOB NO: 08-11)

TMK: (2) 2-7-20:09, 2-7-3:56, and 2-7-17:47 (Portions)

Prepared on behalf of:

County of Maui
Department of Public Works
Wailuku, Maui

Prepared by:

Xamanek Researches, LLC
Pukalani, Maui

Erik M. Fredericksen
Jennifer J. Frey

21 March 2012

ABSTRACT

Xamanek Researches, LLC carried out an archaeological assessment survey of a c. 8,500 square foot portion of land in Haiku *Ahupua`a*, Makawao District, Maui, in mid-March 2012 (TMK: (2) 2-7-20:09, 2-7-3:56, and 2-7-17:47 [Portions]). The project area consists of a portion of a small gully that is adjacent to and north of Haiku Road. Much of this relatively steeply sloping area was unused at the time of our survey. The assessment survey was undertaken in advance of road repair work and replacement of the failing concrete culvert. This survey was conducted on behalf of the direction of the County of Maui, Department of Public Works, Wailuku, Maui.

This archaeological study utilized a 100% pedestrian surface survey with c. 5 m spacing between transects. There was no formal subsurface testing carried out because of safety considerations and the lack of soil deposits in testable areas. During the course of the survey, it was determined that portions of the project area had been previously impacted by earthmoving activities associated with the construction of Haiku Road and its subsequent repair in the 1980s. Given the lack of cultural materials and the level of previous disturbance, no further archaeological work is recommended for much of this c. 8,500 square foot portion of land in Haiku, Maui. However, precautionary monitoring may be warranted for future work, given the presence of relatively thick vegetation.

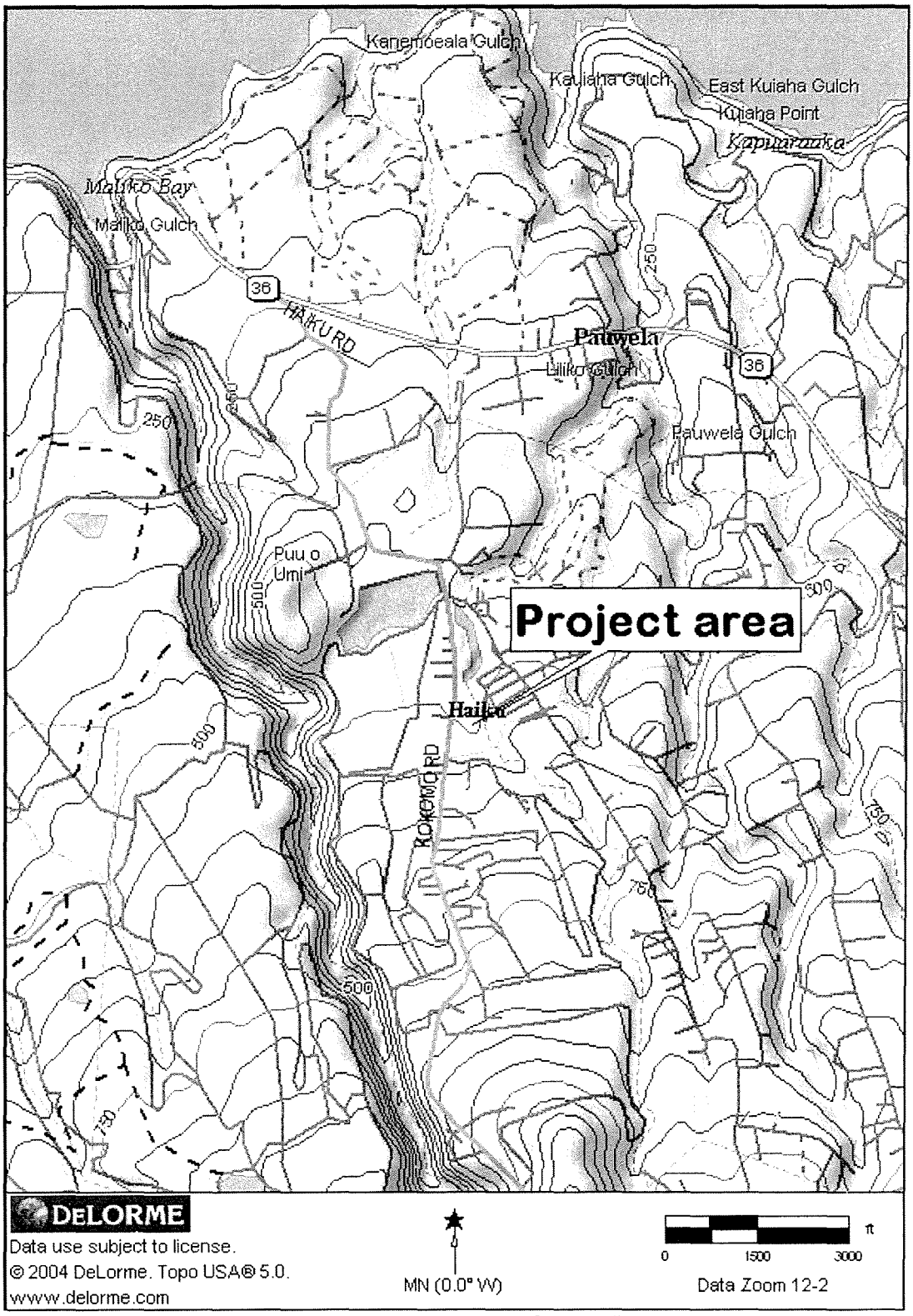

Figure 1: General location of the Haiku Road and Culvert Improvement project, Haiku.

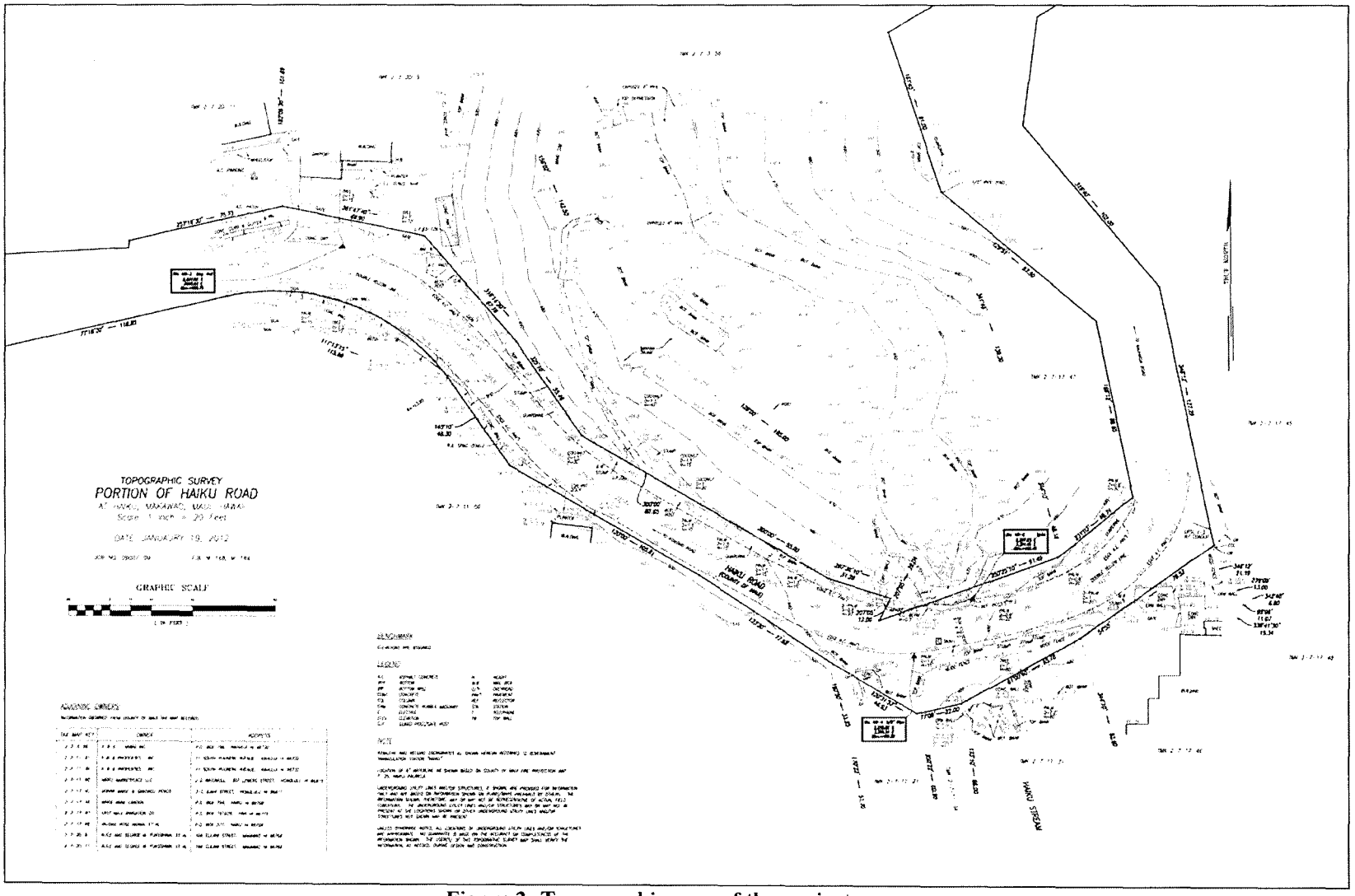

Figure 2: Topographic map of the project area.

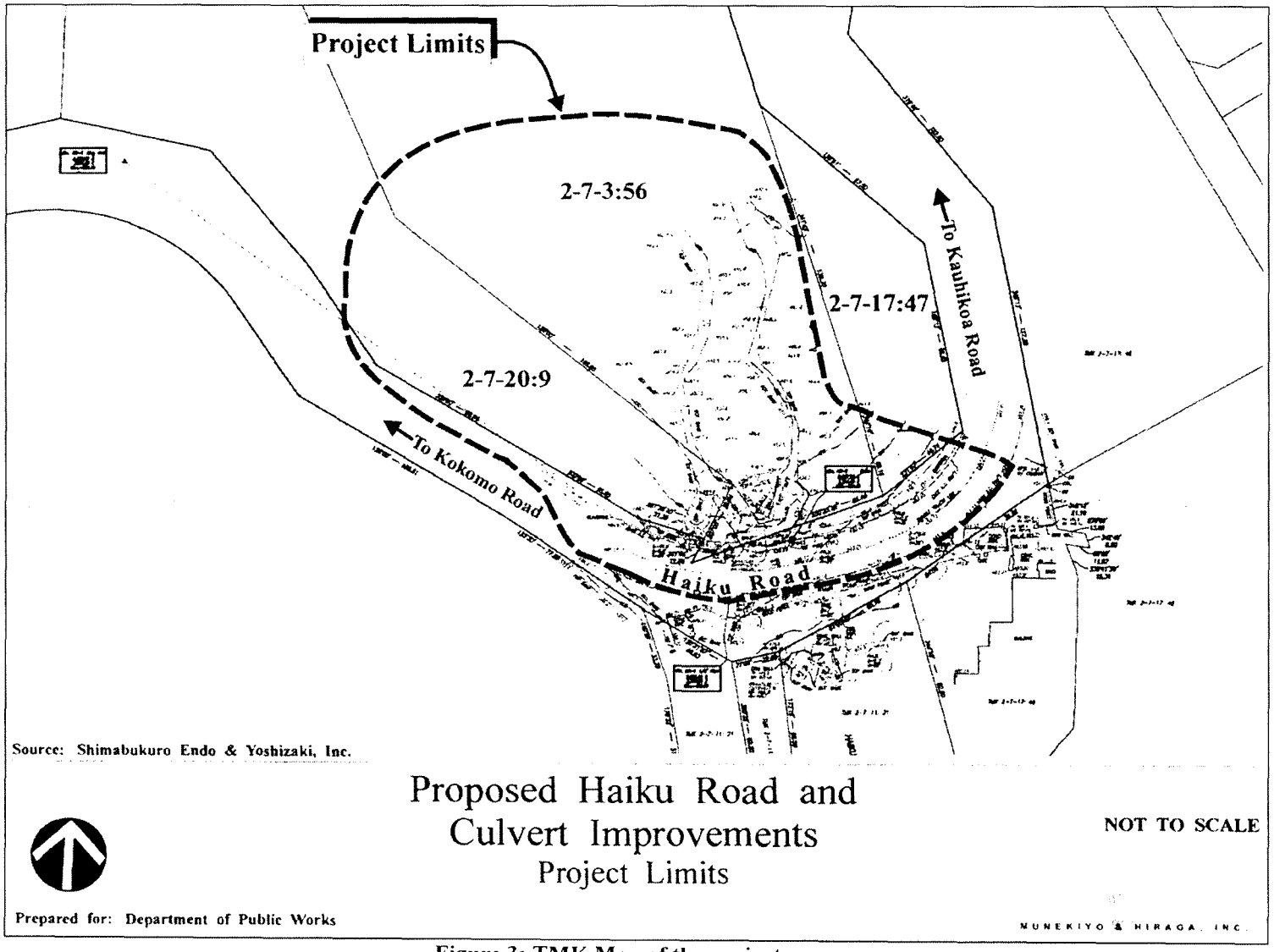

Figure 3: TMK Map of the project area.

TABLE OF CONTENTS

ABSTRACT i
INTRODUCTION 1
STUDY AREA 2
BACKGROUND INFORMATION 4
Mahele Awards 6
Post-1850 6
Previous archaeological work 7
Settlement Patterns and Expectations of Findings 9
ARCHAEOLOGICAL METHODOLOGY 10
ARCHAEOLOGICAL FINDINGS 10
SUMMARY AND CONCLUSIONS 14
SITE SIGNIFICANCE ASSESSMENT 14
REFERENCES 15

TABLE OF FIGURES

Figure 1: General location of the Haiku Road and Culvert Improvement project, Haiku ii
Figure 2: Topographic map of the project area. iii
Figure 3: TMK Map of the project area. iv

TABLE OF PHOTOS

Photo 1: Photograph taken around the turn of the century, showing houses and *lo'i* at the mouth of Maliko Stream (Bartholomew and Bailey, 1994, p. 125) 3
Photo 2: Bridge over Maliko Gulch that carried water for the Hamakua Ditch and later converted for the Kahului Railroad. 7
Photo 3: Project area of Haiku Road, view to the general east. 11
Photo 4: Project location, Haiku Road, guardrail to be repaired/replaced. 11
Photo 5: General view of the guardrail along Haiku Road, view to the north northwest. 12
Photo 6: Culvert below Haiku Road, project area, view to the south southeast. 12
Photo 7: Culvert below Haiku Road, view to the north northwest. 13

INTRODUCTION

Xamanek Researches, LLC carried out an archaeological assessment survey of a c. 8,500 square foot portion of land in Haiku *Ahupua`a*, Makawao District, Maui, in mid-March 2012 (TMK: (2) 2-7-20:09, 2-7-3:56, and 2-7-17:47 [Portions]). The project area consists of a portion of a small gully that is adjacent to and north of Haiku Road. Much of this relatively steeply sloping area was unused at the time of our survey. The assessment survey was undertaken in advance of proposed road repair work and replacement of an undermined concrete culvert (Photos 4 and 6). This survey was conducted per the direction of Ms. Colleen Suyama, Senior Planner with Munekiyo & Hiraga, Inc., on behalf of the County of Maui, Department of Public Works, Wailuku, Maui.

This archaeological study utilized a 100% pedestrian surface survey with c. 5 m spacing between transects. There was no formal subsurface testing carried out because of safety considerations and the lack of soil deposits in testable areas. During the course of the survey, it was determined that portions of the project area had been previously impacted by earthmoving activities associated with the construction of Haiku Road and its subsequent repair in the 1980s. Given the lack of cultural materials and the level of previous disturbance, no further archaeological work is recommended for much of this c. 8,500 square foot portion of land in Haiku, Maui. However, precautionary monitoring may be warranted for future work, given the presence of relatively thick vegetation on the project area.

STUDY AREA

The study area lies on the windward side of East Maui. Precipitation typically ranges from 40 to 60 inches per year, and the climate is dominated by trade wind patterns. Elevations on the project area range from c. 456 to 510 feet AMSL.

At the time of our archaeological inventory survey, much of the project area appeared to have been impacted by relatively recent clearing activities. Consequently, alien plants dominated the flora. However, it appears probable that alien plants present prior to grubbing would have included annual grasses and weeks, *koa haole* (Leucaena leucocephala) shrubs, and ironwood (Casuarina glauca) trees. One indigenous plant species, *'ilima* (Sida fallax) was noted on the property. Soils present on the parcel are identified as Haiku silty clay (HaB). Typically they occur on 3 to 7 percent slope. Runoff is slow, and the erosion hazard slight (Foote, 1972, p. 32). This soil is used primarily for pineapple production and pasturelands in this part of Maui.

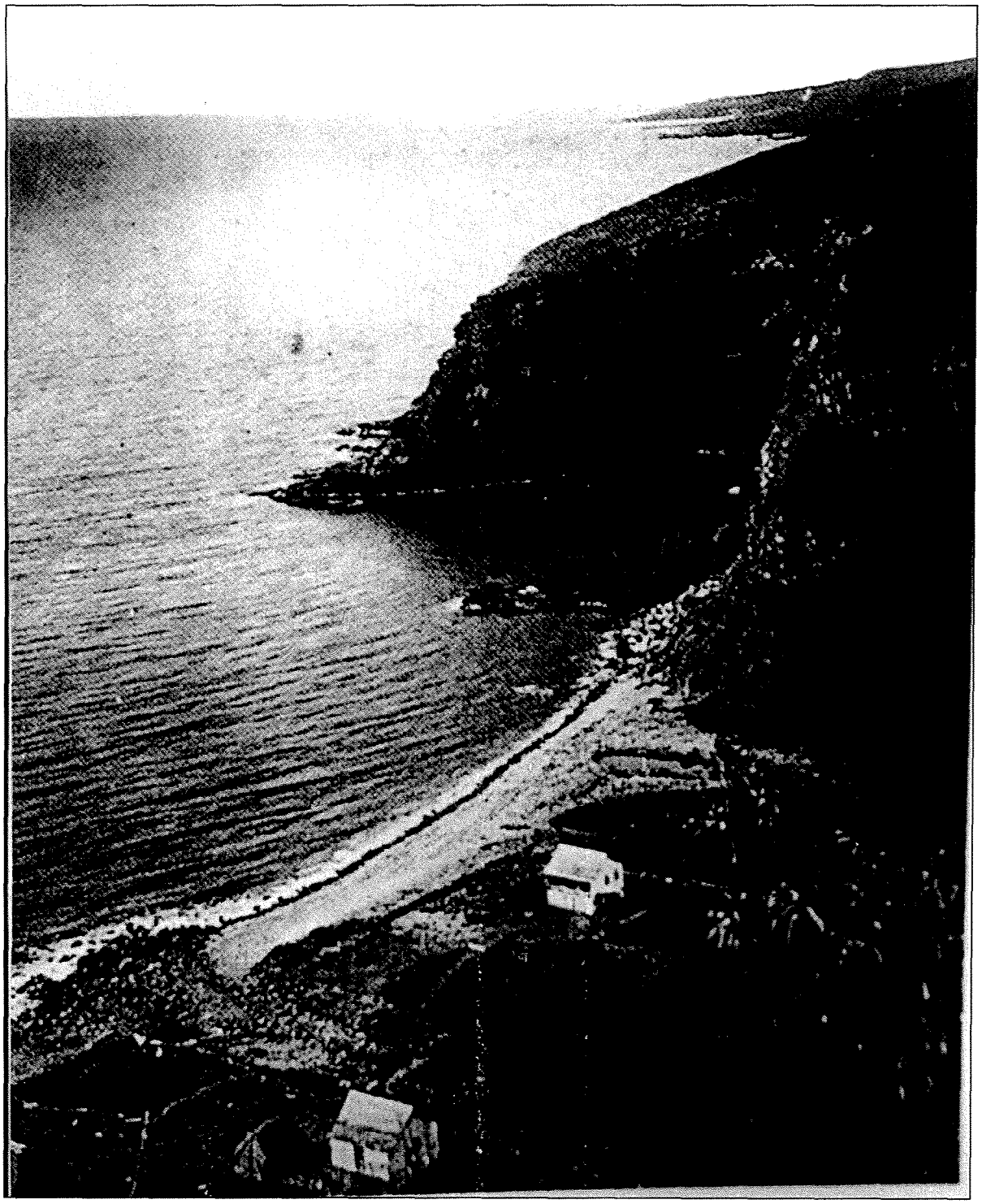

Photo 1: Photograph taken around the turn of the century, showing houses and *lo`i* at the mouth of Maliko Stream, southwest of the current project area (Bartholomew and Bailey, 1994, p. 125).

BACKGROUND INFORMATION

In precontact times, the area surrounding the study area probably supported a considerable population. Maliko Gulch to the south and west of the current project offered an extensive valley that was ideal for the production of wetland *kalo*, breadfruit, *kukui* nut trees, yams and sugar cane. The bay provided excellent fishing grounds. Sweet potatoes were probably grown on the flat land between valleys as well.[1] Handy and Handy mention Maliko Stream and adjacent *ahupua`a* (1972, p. 498):

> *"Hamakua Poko (Short Hamakua) and Hamakua Loa (Long Hamakua) are two coastal regions where gently sloping kula lands intersected by small gulches come down to the sea along the northern coast line of East Mauia. Maliko Stream flowing in a gulch that widens and has a flat bottom to seaward, in pre-sugar-plantation days had a considerable number of lo`i. East of Maliko the number of named ahupua`a is evidence of habitation along this coast. Kuiaha Gulch, beyond Maliko, has a good stream and there were probably a few lo`i. Two kama`aina at Ke`anae said that there were small lo`i developments watered by Ho`olawa, Waipi`o, Hanehoi, Hoalua, Kailua and Na`ili`ilihaele Streams, all of which flow in deep gulches. Stream taro was probably planted along the watercourses well up into the higher kula land and forest taro throughout the lower forest zone. The number of very narrow ahupua`a thus utilized along the whole of the Hamakua coast indicates that there must have been a very considerable population. This would be despite the fact that it is an area of only moderate precipitation because of being too low to draw rain out of trade winds flowing down the coast from the rugged and wet northeast Ko`olau area that lies beyond. It was probably a favorable region for breadfruit, banana, sugar cane, arrowroot; and for yams and `awa in the interior. The slopes between gulches were covered with good soil, excellent for sweet-potato planting. The low coast is indented by a number of small bays offering good opportunity for fishing. The Alaloa, or "Long-road," that went around Maui passed through Hamakua close to the shore, crossing streams where the gulches opened to the sea."*

Kamakau (1992, p. 23) relates the story of Kiha-a-Pi`i-lani concerning a famine that befell Kula and Makawao.... "and the people subsisted on *laulele, pualele, popolo* and other weeds." The legend goes that he set out to clear a patch of ferns in order to plant sweet potatoes to ease the famine. In a single night he cleared a patch so large that it was thought to be impossible to obtain enough slips to plant such a vast area. Kamakau continues (Ibid., p. 24):

[1] A photograph taken in the early part of the 20th century, shows taro fields at the mouth of Maliko Stream (Photo 1), directly below Maliko Point.

"The people said skeptically of this great undertaking, 'Where will he find enough sweet-potato slips to cover the patch?' Next day Kiha-a-Pi`i-lani went to Hamakuapoko[2] and Hali`imaile to ask for potato slips. The natives gave him whole patches of them wherever he went. ...Kiha-a-Pi`i-lani returned to his dwelling place with his huge bundle of sweet-potato slips. One bundle of slips was sufficient to cover every mound of the whole field. No sooner were they planted than a shower fell, and the chief who made efforts at farming was pleased."

Although the Hamakua area did not appear to be an area with a great deal of political importance, Kamakau relates that during the wars waged by the great Hawaii chief Kalani`opu`u, (Ibid., p. 91): "Ka-lani-`opu`u decided to go on to Ko`olau, Maui, where food was abundant.[3] He went to Ka`anapali and fed his soldiers upon the taro of Honokahua. ... At Hamakualoa Ka-lani-`opu`u landed and engaged in battle, but Ka-hekili hastened to the aid of his men, and they put up such a fierce fight that Ka-lani-`opu`u fled in his canoes. Landing at Ko`olau he slew the common people and maltreated the captives by urinating into their eyes."

During Kamehameha's conquest of Maui—Wailuku and Iao Valley—in c. 1790, Kamehameha's vast canoe fleet landed at various places along the Hamakua coast (Ibid., p. 112). Research conducted by Theresa Donham indicates that the mouth of Maliko Gulch was a precontact canoe landing (personal communication). Other landings on the Hamakua coast were at Kuiaha, Ho`olawe, Waipio, and Huelo. These would have been—more or less—all weather landing sites. It is quite likely that other landings were used in times when the north swell was calm. These locations probably would have been ones used by the invading forces, and the inhabitants of the areas would have suffered in the ensuing hostilities.

In 1828, missionaries William Richards, Lorrin Andrews and J.S. Green conducted a tour around the island of Maui. In a notation dated August 22, 1828 they relate: "This day we came on to a pavement said to have been built by Kihapilani, a king, contemporary with Umi, and ancient king of Hawaii. He is said to have built it, that his name might not roll out. It extends more than 30 miles, and is a work of considerable magnitude. This pavement afforded us no inconsiderable assistance in traveling as we ascended and descended a great number of steep and difficult paries (palis)." [Sterling, 1998, p. 104]. The remnants of the road could still be seen well into the 19th century, and are referred to as "Kipapa of Kihapi`ilani" (Ibid.).[4]

---

[2] Maliko is situated nearly on the border between Hamakuapoko and Hamakualoa.

[3] This was after having ravaged the island of Lanai, and food to sustain his warriors had run out.

[4] The Belt Road, constructed between Hana and Kahului, was built along this historic trail. Begun at Hana in the late 1800s, it was finally connected to Central Maui in 1926.

Mahele Awards

There are 30 Land Commission Awards listed in the Indices of Awards for Haiku *ahupua`a.* A sample of Land Commission Awards in lower Maliko Gulch is presented in the table below. No Awards are contained within the current project area.

All of the awards indicated that within gulches in the lowlands in Haiku *ahupua`a,* there existed a zone of agricultural usage and associated habitation. In addition, topography unsuitable for *taro* production was utilized as pasturage.

Table 1: LCA Information

LCA #	Area	Awardee	Land use	
3304-B: 2	0.58 acres	Onaha	*Taro* cultivation	
3905-C	1.07 acres	Kaili	*Taro* cultivation	*[5]
5453	2.04 acres	Paele	Pasture land and *taro* cultivation	*
6510-L:2 and 3	c. 2.5 acres	Ku	Pasture land and *taro* cultivation	*
6510-O: 2	1.75 acres	Kamakaeu	*Taro* cultivation	

Post-1850

Bureau of Conveyances records indicate that Richard Armstrong purchased land from M. Kekuana`oa on five occasions between April of 1850 and July of 1855 (Masterson, Chiogioji, Hammatt, 1995, p. 11). One sale included Grant 165. In March 1861, this land was obtained by Haiku Sugar Company. Haiku Sugar Company was one of the early successful sugar companies and it ran Hamakuapoko Mill from 1884 to 1905. In 1903 the Maui Agricultural Company was formed by Samuel T. Alexander and Henry P. Baldwin, when Haiku Sugar Company was merged with their Paia Plantation. The sugar processing operation was then moved to Paia Mill.[6]

Sugar production in this part of Maui was highly dependent on water. In 1876, Alexander and Baldwin realized that more water was needed for their East Maui sugar operation. They formed the Hamakua Ditch Company[7] and began construction of a system of ditches, pipes and tunnels through 17 miles of rainforest on the windward side of Haleakala. Known as the Hamakua Ditch, this was an engineering achievement during its time. The crossing of Maliko Gulch was perhaps the largest obstacle, as the steep sides had to be connected by a bridge, which, when built, became the longest and highest in the Hawaiian Kingdom. There is an often told incident about the one-armed man Henry Baldwin, who during construction of the bridge, rappelled into the deep ravine to show workers it was not as dangerous as it seemed (Bartholomew and Bailey, 1994, p. 46).

Not to be outdone, Claus Spreckels, owner of Hawaiian Commercial & Sugar Company (HC&S) began the construction on the Haiku Ditch, which brought water from the East Maui

[5] Reference (*) Masterson, Chiogioji, and Hammatt, 1995, p. 9. Others—Waihona `Aina.
[6] This mill continued to produce sugar until its closing on September 23, 2000.
[7] This later became East Maui Irrigation Company in 1908, succeeding the 1876 Hamakua Ditch Company (Wilcox, 1996, p. 117).

Mountains to his plantation in Central Maui. Its route was *makai* of the Hamakua Ditch. Control of HC&S was wrested from Claus Spreckels in 1898 by Alexander and Baldwin in a stock manipulation.

During the early part of the 20th century, more and more sugar plantations were grafted onto the Maui Agricultural Company, including Kailua, Kula, Makawao, Pulehu, and Kalialinui. The sugar operations of HC&S were based in Puunene, while Maui Agricultural Company continued to be based in Paia. In 1948, the two companies merged, consolidating all of A&B's sugar production on Maui under HC&S. In 1962 HC&S merged with and became a division of Alexander and Baldwin, and East Maui Irrigation Company (EMI) became a subsidiary of A & B (Wilcox, 1996, p. 121).

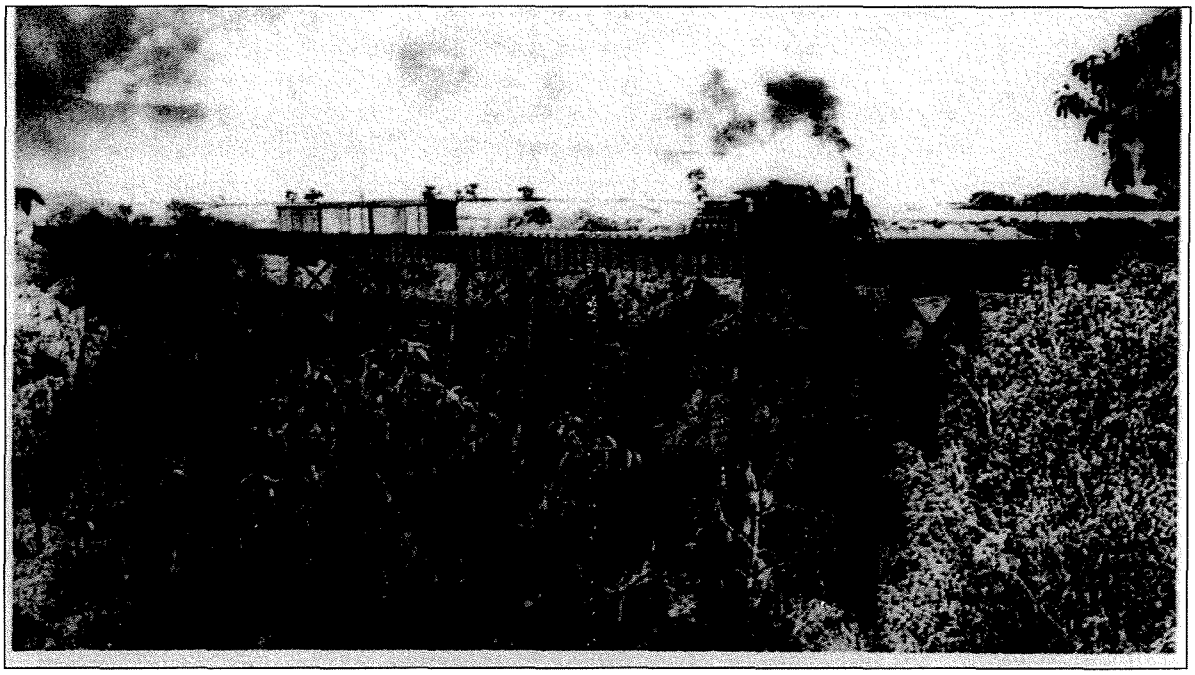

Photo 2: Bridge over Maliko Gulch that carried water for the Hamakua Ditch and later converted for the Kahului Railroad.

Previous archaeological work

Perusal of documents at the SHPD office in Kahului, Maui, provided information on a number of sites that have been identified on the U.S.G.S. Paia Quadrangle, along the Hamakua coast. As can be seen on the table below, many of these sites are burial sites along the coastline. Site 1064 is a site from which both precontact burials and historic coffin burials are constantly eroding. The co-author has been called to that area on several occasions over a period of 30 years, to retrieve human remains that have washed out of the sand bank after a storm. The broken long bones, and drilled shark's teeth[8] found, suggest that some of the burials may have been looted in precontact times, in search of material for the manufacture of fishhooks. A list of the sites is presented on Table 1.

[8] Similar shark's teeth, attached to wooden handles, and used as knives, can be seen in Buck, 1964, Vol. X, p. 447.

In 1995, Cultural Surveys Hawaii conducted an archaeological inventory survey of Lot 2 of the Haiku Agricultural Subdivision of A & B Properties. This c. 64 acre parcel lies *mauka* of the study property, and had been in pineapple cultivation for many years. Nothing was found during the pedestrian survey, and further work was not recommended (Masterson, Chiogioji and Hammatt, 1995, p. i). The authors did note that during a site inspection in June 1994, conducted by Maui SHPD archaeologist, Theresa Donham on Lot 1 (the neighboring lot *makai* of Lot 2), traditional Hawaiian artifacts were found. These included an *`ulu`maika* stone, a partial adze, a ground pebble tool, and a polished basalt flake. They conclude: "These artifacts could indicate the presence of a formerly intact archaeological deposit in the neighboring Lot 1 parcel." (Ibid., p. 7).

Xamanek Researches carried out an inventory survey during 1999 on Maliko Point, which lies on the *makai* (north) side of Hana Highway across from Lot 1. During the course of our fieldwork, we documented an extensive subsurface waterworn pavement, a habitation deposit, and precontact and post-contact burials. The pavement and habitation deposit were designated Site 50-50-054969, while the burials were designated Site 4833. Two charcoal samples returned radiocarbon date ranges for the precontact habitation/ceremonial site between AD 1455 to 1800 – with both intercept dates being between 1640 to 1680. Two additional dates extended into the 20th century, indicating that use at this site continued well into the post-contact period. This is also attested to by the presence of the Kalawai`a Cemetery (Site 4833). A large portion of the Site 4969 has been placed in passive preservation along with the Kalawai`a *ohana* cemetery (Fredericksen and Fredericksen, 2001).

Table 2
Coastal and near coastal sites in vicinity of project area

Site #	Site type	Remarks
1063	Petroglyphs	Hamakuapoko petroglyphs
1064	Burials	Kalahau Burial Complex
1221	Agricultural complex	Kaupakalua Complex. Rectangular terraces (15), irrigation canal, and retaining wall. (Not shown on Figure 3)
1253	Habitation and burial	Paia House and Grave complex. Well-preserved house outline, with rectangular pit. Surface artifacts include grindstone, basalt flakes. Food midden is also present around periphery.
1255	Platform	Ho`okipa platform. Badly eroded terraces (2) without surface artifacts or midden evident.
1271	Burial	Ho`okipa burial. Outline of burial pit in parking area.
1265	Burials	Hamakuapoko Burial Complex
1700	Burials	Pauwela Light House Burials
1779-1782	Burials and habitation	Located during monitoring of the Spreckelsville Sewerline project
4482	Historic	World War II Pill Box in Paia

Settlement Patterns and Expectations of Findings

This area of Maui is characterized by flat plains intersected by deep gullies. Maliko Gulch, although not as wet as valleys to the east, provided sufficient water for some *taro* production, as the LCA information notes. Sweet potatoes were thought to have been cultivated in the *kula* areas between drainage gulches according to Handy and Handy (1972). The relatively large bay at the mouth of Maliko Stream provided access to the abundant shore and deep-ocean resources. The vantage point provided by Maliko Point aided in the securing of these resources. A traditional canoe-landing site at Maliko is further evidence of the importance of marine resources to the inhabitants (Theresa Donham, personal communication). All in all, people living in this part of Haiku *ahupua`a* in late precontact times were probably fairly numerous. Human graves have been noted all along the Hamakua coast, both to the west and to the east.

ARCHAEOLOGICAL METHODOLOGY

Xamanek Researches, LLC conducted an archaeological assessment survey of the proposed Haiku Road and culvert repair project area on 7 and 9 March 2012. The archaeological investigation consisted of a 100% of pedestrian survey and no subsurface testing, because of safety considerations. The pedestrian inspection of the project area was carried out with systematic sweeps oriented in a roughly north/south direction using c. 5 m intervals between sweeps. Our field team consisted of Marco Molina, B.A., and Erik Fredericksen (SHPD Permit #12-06). Jennifer Frey, B.A., carried out lab work for the project. Project notes and photographs are on file at the Xamanek Researches LLC facility in Pukalani, Maui.

ARCHAEOLOGICAL FINDINGS

We did not locate any significant material culture remains during the course of the archaeological assessment of the project area. Inspection of the eroded and exposed concrete culvert under Haiku Road strongly suggests that it is a modern (i.e. less than 50 years old) feature. This interpretation is based upon the appearance of the matrix of the concrete used in this feature's construction, which is similar to the concrete water flow deflectors that are present on the project area (see Photo 6). The existing concrete culvert has been undermined by high water flow events. This erosion has also impacted portions of the guardrail and Haiku Road in this locale (see Photo 4).

Photo 3: Project area of Haiku Road, view to the east.

Photo 4: Project location, Haiku Road, guardrail to be repaired/replaced.

Photo 5: General view of the guardrail along Haiku Road, view to the north-northwest.

Photo 6: Culvert below Haiku Road, project area, view to the south-southeast.

Photo 7: Culvert below Haiku Road, view to the north-northwest, off project area.

SUMMARY AND CONCLUSIONS

As noted above, there were no significant material culture remains located during our assessment survey of the project area. The proposed impact area consists of a portion of a natural drainage area. The sides of this gully are relatively steep on the north (i.e. project area) side of Haiku Road. Inspection of the undercut concrete culvert (square in cross section) indicates that it is less than 50 years old. This determination was made based upon the concrete matrix, which is modern.

SITE SIGNIFICANCE ASSESSMENT

Archaeological resources are subject to the broad criteria established for the State and National Register of Historic Places classified below:

- Criterion "a"—Be associated with events that have made an important contribution to the broad patterns of our history;
- Criterion "b"—Be associated with the lives of persons important in our past;
- Criterion "c"—Embody the distinctive characteristics of a type, period, or method of construction; represent the work of a master; or possess high artistic value;
- Criterion "d"—Have yielded, or is likely to yield, important information for research on prehistory or history;
- Criterion "e"—Have an important traditional cultural value to the native Hawaiian people or to another ethnic group of the state due to associations with traditional cultural practices once carried out, or still carried out, at the property or due to associations with traditional beliefs, events or oral accounts.

Given that there were no cultural resources located during our archaeological survey of the project area, there are no significance assessments to be made. However, precautionary archaeological monitoring may be warranted, given that the project area is relatively heavily vegetated.

REFERENCES

Bartholomew, Gail and Bren Bailey
1994 Maui Remembers: A Local History, Mutual Publishing, Honolulu.

Buck, Peter H. (Te Rangi Hiroa)
1964 Arts and Crafts of Hawaii: War and Weapons, Volume X, Bishop Museum Press, Honolulu.

Foote, D.E., E.L. Hill, S. Nakamura, and F. Stephens
1972 Soil Survey of the Islands of Kauai, Oahu, Maui, Molokai, and Lanai, State of Hawaii. U.S.D.A., Government Printing Office, Washington, D.C.

Fornander, Abraham
1996 Ancient History of the Hawaiian People, Mutual Publishing, Honolulu.

Fredericksen, Erik M.
Sept. 26, 2000 Preservation Plan for Site 4969, Xamanek Researches, Pukalani, HI. [draft]

Oct. 7, 2000 Burial Treatment Plan for Site 4969, Xamanek Researches, Pukalani, HI.

Fredericksen, Demaris L. and Erik M. Fredericksen
Feb. 2, 2000 Archaeological Inventory Survey of Mauka Portion of Olowalu Development Parcel, Phase 2, Olowalu *Ahupua`a*, Lahaina District, Maui Island (TMK: 4-8-3: 10), prepared for Olowalu Elua Associates, Kahului, by Xamanek Researches, Pukalani, HI.

Handy, E.F. Craighill and Elizabeth Handy
1972 Native Planters in Old Hawaii. Bishop Museum Bulletin 233. Bishop Museum Press, Honolulu.

Juvic, Sonia P., and James O. Juvic
1998 Atlas of Hawaii, 3rd Edition, University of Hawaii Press, Honolulu.

Kamakau, Samuel M.
1992 Ruling Chiefs of Hawaii, Revised Edition, The Kamehameha Schools Press, Honolulu.

Masterson, Ian A., Rodney Chiogioji and Hallett H. Hammatt
1995 Archaeological Inventory Survey for Lot 2 of the Haiku Agricultural Subdivision, A 64.27-acre Parcel in the *Ahupua`a* of Haiku, Island of Maui (TMK 2-7-04: 6 and 24), prepared for A&B Properties, Inc., Cultural Surveys Hawaii.

State Historic Preservation Division Files, Maui Office
Various Site Forms

Sterling, Elspeth P.
1998 Sites of Maui, Bishop Museum Press, Honolulu.

Wilcox, Carol
1996 Sugar Water: Hawaii's Plantation Ditches, University of Hawaii Press, Honolulu.

APPENDIX F.

Cultural Interview Summaries

DEPARTMENT OF PUBLIC WORKS HAIKU ROAD AND CULVERT IMPROVEMENTS
CULTURAL INTERVIEW SUMMARY

Interview with: Gregorysenn Kauhi

Interview Date: January 10, 2012

Interviewed by: Colleen Suyama, Senior Associate
Munekiyo & Hiraga, Inc.

The cultural interview was held with Mr. Gregorysenn Kauhi, a native Hawaiian resident in Haiku living on Kokomo Road, at his residence. Although Mr. Kauhi was raised in Waimanalo, Oahu he was born in Wailuku, Maui at a medical center on Lower Main Street in 1952 before the Maui Memorial Hospital opened. His mother was visiting Maui at the time and went into labor.

Mr. Kauhi's parents were George Kauhi, Jr. and Bessie Elizabeth Kauhi (born Herras). His parents were divorced when he was two (2) years old. He lived with his mother, brother and sister in Waimanalo. His father was Hawaiian-Chinese and his mother was Hawaiian. His father worked for Hawaiian Tel and moved to Maui in 1968-1969 to work for the Maui Office and had another family after his divorce from Mr. Kauhi's mother. He has two (2) half-brothers, three (3) half-sisters and one (1) adopted brother on his father's side. He also has one (1) half-brother on his mother's side.

Mr. Kauhi is married to Violet (Santos) Kauhi and has three (3) adult children, two (2) daughters and one (1) son. After graduating from Kailua High School, Mr. Kauhi moved to Maui in 1970 with his brother to attend Maui Community College where he received an Associates Degree in architectural drafting. In 1977, he started work with Maui Electric Company (MECO) and worked for 34 years with MECO.

He has lived in Haiku at his Kokomo Road residence for the last 28 years. Mr. Kauhi is not aware of any traditional or customary use of the project area.

The reason Mr. Kauhi moved to Haiku is that it reminded him of the country atmosphere of his home in Waimanalo. Haiku feels the same as Waimanalo in the 1960s and 1970s. He misses the pineapple fields that are gone since Maui Land and Pineapple Company went out of business. The area across from his home once had pineapple fields and is now used for cattle pasturage.

Mr. Kauhi voiced no concerns regarding the proposed culvert improvements. He only hopes the County can implement the improvements like it is supposed to be done and not have to modify the improvements due to lack of sufficient funding. He noted that Kokomo Road has not been repaved in a long time and is overdue for such improvements. He supports public works projects to improve the area.

DEPARTMENT OF PUBLIC WORKS HAIKU ROAD AND CULVERT IMPROVEMENTS
CULTURAL INTERVIEW SUMMARY

Interview with: Dennis Doi

Interview Date: May 11, 2012

Interviewed by: Erin Mukai, Associate
Munekiyo & Hiraga, Inc.

Dennis Doi was born on November 25, 1950 to Masaaki and Masuyo Doi. Dennis has three (3) brothers, Carlton, who has passed away, Milton, and Leslie and one (1) sister, Barbara. The Doi Family was one (1) of about ten (10) or so families who grew pineapple in Haiku. Dennis explained that back then there were a lot of pineapple farms in Haiku, each owned by various local families: the Shirotas, Yamamuras, Shishidos, Perreiras, Ichikawas, Hiromotos, Tamayoses and the Dois. Growing up, Dennis remembers the pineapple fields as being a significant part of the rural landscape in Haiku. Most people living in Haiku, Dennis described, were growing pineapple or working at the Pauwela Dairy or Haserot Cannery (formerly Libby Cannery). When Haserot Cannery closed in the 1960's, all the pineapple grown in Haiku was taken to the cannery in Kahului. The Yamamura's were the last private pineapple grower. Dennis is unsure if they are still growing pineapples, since the Kahului cannery closed.

The interview with Dennis Doi took place on May 11, 2012 in the office of Munekiyo & Hiraga, Inc. in Wailuku.

Dennis and his family moved to Haiku in 1954 when his parents purchased their house on Lihau Place. Today, Dennis lives on the same street, a next door neighbor to the house in which he grew up. In order to get to his home, Dennis must travel along Haiku Road and cross Lilikoi Gulch, the site of the proposed improvements. Dennis is familiar with the area since he has been a resident of Haiku, Lihau Place in particular, since 1954. Dennis clarified that he did spend five years away while attending college at Oregon State University.

The project site – where Haiku Road crosses Lilikoi Gulch – may be described as being located within a relatively central area of Haiku. The crossing over Lilikoi Gulch provides access to an existing residential neighborhood that was once called Rice Camp. Dennis explained that in the vicinity of the project site there was once Nakatsukasa Store and Mukai Store, both of which have closed down over the years. He also pointed out that there was once a community center nearby and that while there is a relatively new post office in the area, the post office has always been there, albeit in another building across the street. Also in the area, and existing today, are Fukushima

Store and the cannery warehouse. These days the cannery warehouse is home to a few commercial establishments, however, in the past, its purpose was to store pineapple.

As Dennis regularly travels Haiku Road in the vicinity of, as well as at the project site itself, Dennis remembers seeing several traffic accidents in the area. Dennis explained that there are large trees in the area and that he remembers having seen several accidents in which cars have hit the trees. Dennis also describes Haiku Road as being regularly used by bicyclists and pedestrians who often walk the road for exercise. He described Haiku Road at its crossing over Lilikoi Gulch as not having guardrails but having posts at one point in time. Afterwards, the County installed guardrails which then took away walking space along the roadway which was formerly utilized by pedestrians. Dennis hopes that the County will consider widening the road to provide for a safer pedestrian walkway.

When asked if he knows of any cultural practices having occurred or occurring in at the project site or in the vicinity of the project site, Dennis responded that he, personally, knows of none although he is not certain. Dennis described, though, gulches in general as sometimes being of cultural significance. He has never in his childhood or in recent years explored the gulch.

In discussing the project, Dennis does not personally know of any cultural concerns. He only asks that the County consider widening the road to provide for a safer walkway for pedestrians and travel-way for bicyclists.