FINAL ENVIRONMENTAL IMPACT STATEMENT

INTERNATIONAL MARKET PLACE REVITALIZATION PROJECT

Appendix 4

Traffic Impact Report

Traffic Impact Report

International Market Place Revitalization Project

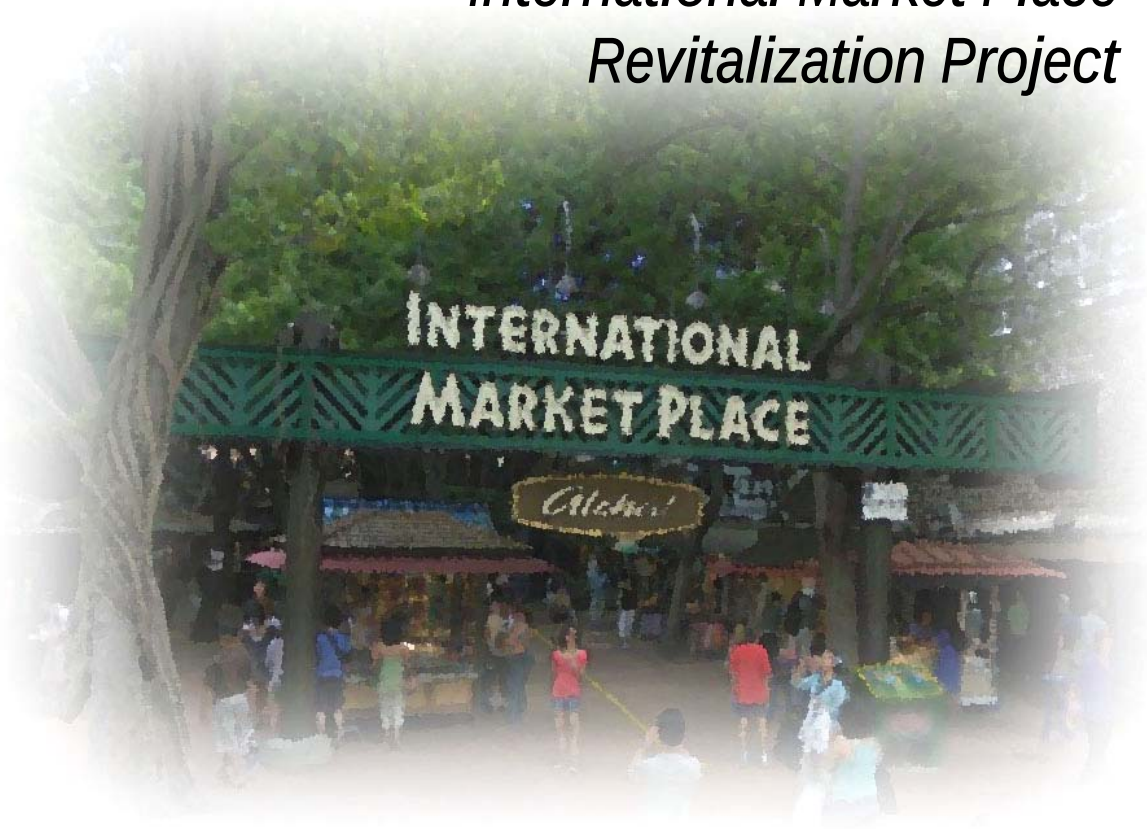

Prepared for:
The Taubman Company

Prepared by:
Wilson Okamoto Corporation

October 2011

TRAFFIC IMPACT REPORT

FOR THE

INTERNATIONAL MARKET PLACE REVITALIZATION PROJECT

Prepared for:

The Taubman Company
200 East Long Lake Road, Suite 300
Bloomfield Hills, MI 48304-2324

Prepared by:

Wilson Okamoto Corporation
1907 South Beretania Street, Suite 400
Honolulu, Hawaii 96826
WOC Ref: 8243-01

October 2011

TABLE OF CONTENTS

		Page
I.	Introduction	1
	A. Purpose of Study	1
	B. Scope of Study	1
II.	Project Description	1
	A. Location	1
	B. Project Characteristics	3
III.	Existing Traffic Conditions	3
	A. General	3
	B. Area Roadway System	3
	C. Traffic Volumes and Conditions	6
	1. General	6
	a. Field Investigation	6
	b. Capacity Analysis Methodology	7
	2. Existing Peak Hour of Traffic	8
	a. General	8
	b. Kalakaua Avenue and Seaside Avenue	8
	c. Kalakaua Avenue and Kaiulani Avenue	8
	d. Kuhio Avenue and Seaside Avenue	11
	e. Kuhio Avenue, Nohonani Street, and Duke's Lane	11
	f. Kuhio Avenue and Nahua Street	12
	g. Kuhio Avenue and Walina Street	12
	h. Kuhio Avenue and Kanekapolei Street	13
	i. Ala Wai Boulevard and Seaside Avenue	14
	j. Ala Wai Boulevard and Nohonani Street	14
	k. Ala Wai Boulevard and Nahua Street	14
	l. Ala Wai Boulevard and Kanekapolei Street	15
IV.	Projected Traffic Conditions	15
	A. Site-Generated Traffic	15
	1. Trip Generation Methodology	15
	2. Trip Distribution	18
	B. Through-Traffic Forecasting Methodology	21
	C. Other Considerations	21
	D. Total Traffic Volumes Without Project	22
	E. Total Traffic Volumes With Project	26
V.	Traffic Impact Analysis	26
VI.	Recommendations	31
VII.	Conclusion	32

LIST OF EXHIBITS

FIGURE 1	Location and Vicinity Map
FIGURE 2	Project Site Plan
FIGURE 3	Existing Weekday PM Peak Hour of Traffic
FIGURE 4	Existing Saturday PM Peak Hour of Traffic
FIGURE 5	Distribution of Site-Generated Vehicles Weekday PM Peak Hour of Traffic
FIGURE 6	Distribution of Site-Generated Vehicles Saturday PM Peak Hour of Traffic
FIGURE 7	Year 2015 Weekday PM Peak Hour of Traffic Without Project
FIGURE 8	Year 2015 Saturday PM Peak Hour of Traffic Without Project
FIGURE 9	Year 2015 Weekday PM Peak Hour of Traffic With Project
FIGURE 10	Year 2015 Saturday PM Peak Hour of Traffic With Project

LIST OF APPENDICES

APPENDIX A	Existing Traffic Count Data
APPENDIX B	Level of Service Definitions
APPENDIX C	Capacity Analysis Calculations Existing Peak Hour Traffic Analysis
APPENDIX D	Capacity Analysis Calculations Projected Year 2015 Peak Hour Traffic Analysis Without Project
APPENDIX E	Capacity Analysis Calculations Projected Year 2015 Peak Hour Traffic Analysis With Project

I. INTRODUCTION

A. Purpose of Study

The purpose of this study is to identify and assess the potential traffic impacts resulting from the proposed International Market Place revitalization project in Waikiki on the island of Oahu. The proposed project entails the replacement of the existing International Market Place and Miramar Hotel with a new retail complex.

B. Scope of Study

This report presents the findings and conclusions of the traffic study, the scope of which includes:

1. Description of the proposed project.
2. Evaluation of existing roadway and traffic operations in the vicinity.
3. Analysis of future roadway and traffic conditions without the proposed project.
4. Analysis and development of trip generation characteristics for the proposed project.
5. Superimposing site-generated traffic over future traffic conditions.
6. The identification and analysis of traffic impacts resulting from the proposed project.
7. Recommendations of improvements, if appropriate, that would mitigate the traffic impacts resulting from the proposed project.

II. PROJECT DESCRIPTION

A. Location

The existing International Market Place and Miramar Hotel are located between Kalakaua Avenue and Kuhio Avenue east of Duke's Lane in Waikiki on the island of Oahu (See Figure 1). The project site is further identified as Tax Map Keys 2-6-22: 36, 37, 38, 39, and 43. Primary vehicular access to the proposed redeveloped complex would be provided at the intersection of Kuhio Avenue and Walina Street with secondary access provided off Duke's Lane. In addition, a valet pull-out will be provided off Kuhio Avenue between Duke's Lane and Nahua Street.

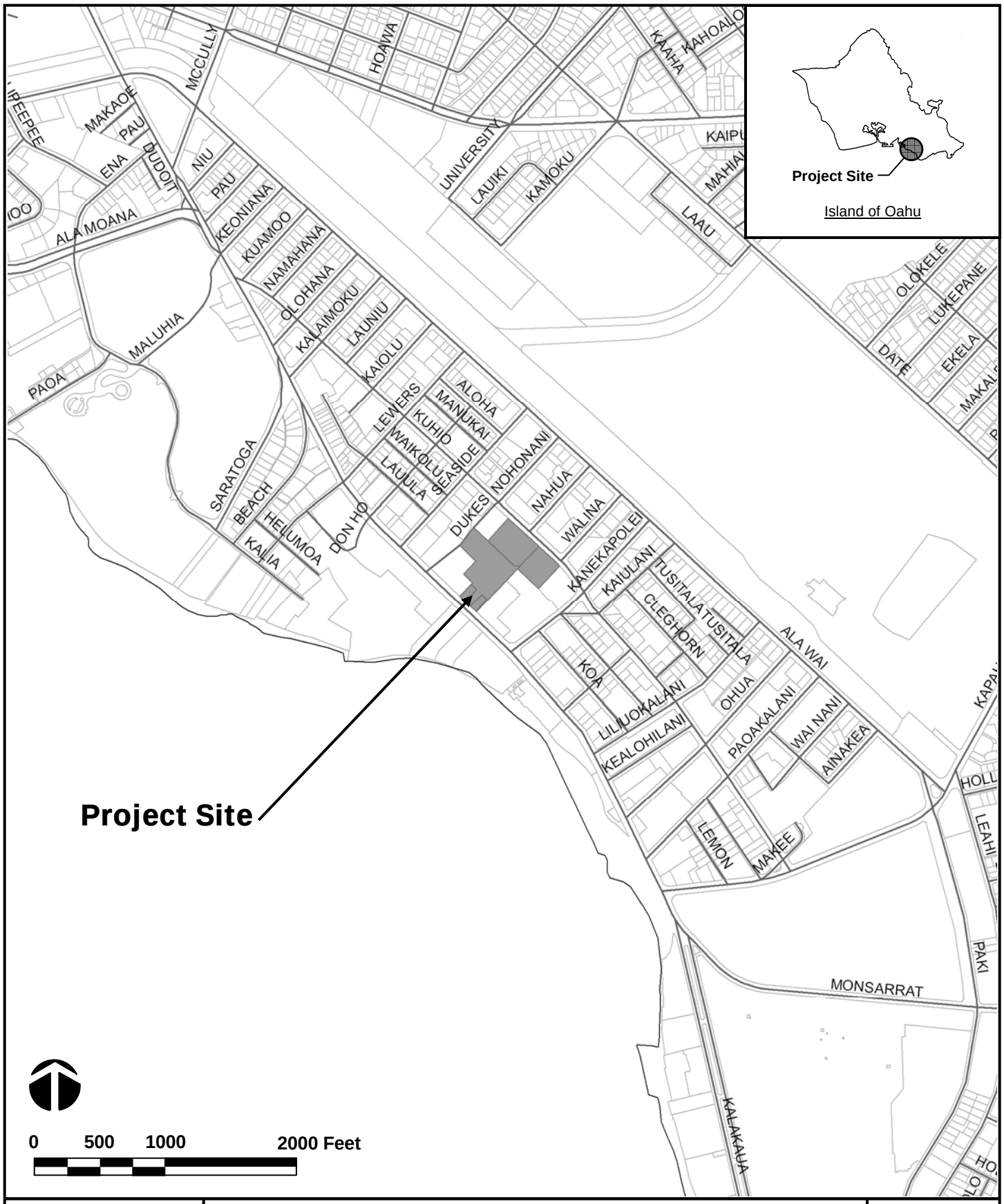

WILSON OKAMOTO CORPORATION ENGINEERS - PLANNERS	INTERNATIONAL MARKET PLACE LOCATION AND VICINITY MAP	FIGURE 1

B. Project Characteristics

The project site currently houses a variety of shops, carts, and restaurants (~192,000 square feet), as well as, a hotel (~357 rooms). The proposed project entails the replacement of these uses with a new retail complex that will include approximately 355,000 square feet of retail/restaurant space. Primary vehicular access will be provided via a new access roadway on the south side of the Kuhio Avenue and Walina Street intersection with secondary access provided via a driveway off Duke's Lane. Valet service areas will be provided on-site, as well as, fronting the project site along Kuhio Avenue. There is also an existing access off Kaiulani Avenue on the east edge of the project site. However, this access will be restricted to service vehicles only. Figure 2 shows the proposed site plan.

III. EXISTING TRAFFIC CONDITIONS

A. General

The proposed project will be located adjacent to Kalakaua Avenue, a predominantly four-lane, one-way (eastbound) City and County of Honolulu roadway generally oriented in the east-west direction that with Ala Wai Boulevard forms a couplet system that provides access through Waikiki. Kuhio Avenue runs parallel to this couplet and also serves as an access roadway through Waikiki.

B. Area Roadway System

West of the project site, Kalakaua Avenue intersects Seaside Avenue, a connector roadway between Kalakaua Avenue and Ala Wai Boulevard generally oriented in the north-south direction. At this signalized intersection, Kalakaua Avenue has an exclusive left-turn lane, a shared left-turn and through lane, and three through lanes while Seaside Avenue has two northbound departure lanes.

East of the intersection with Seaside Avenue, Kalakaua Avenue intersects Kaiulani Avenue. Kaiulani Avenue originates at Kalakaua Avenue as a one-way (northbound) roadway that transitions to a two-way roadway at the intersection with Kanekapolei Street. At this signalized intersection, Kalakaua Avenue has an exclusive left-turn lane and three through lanes while Kaiulani Avenue has two northbound departure lanes.

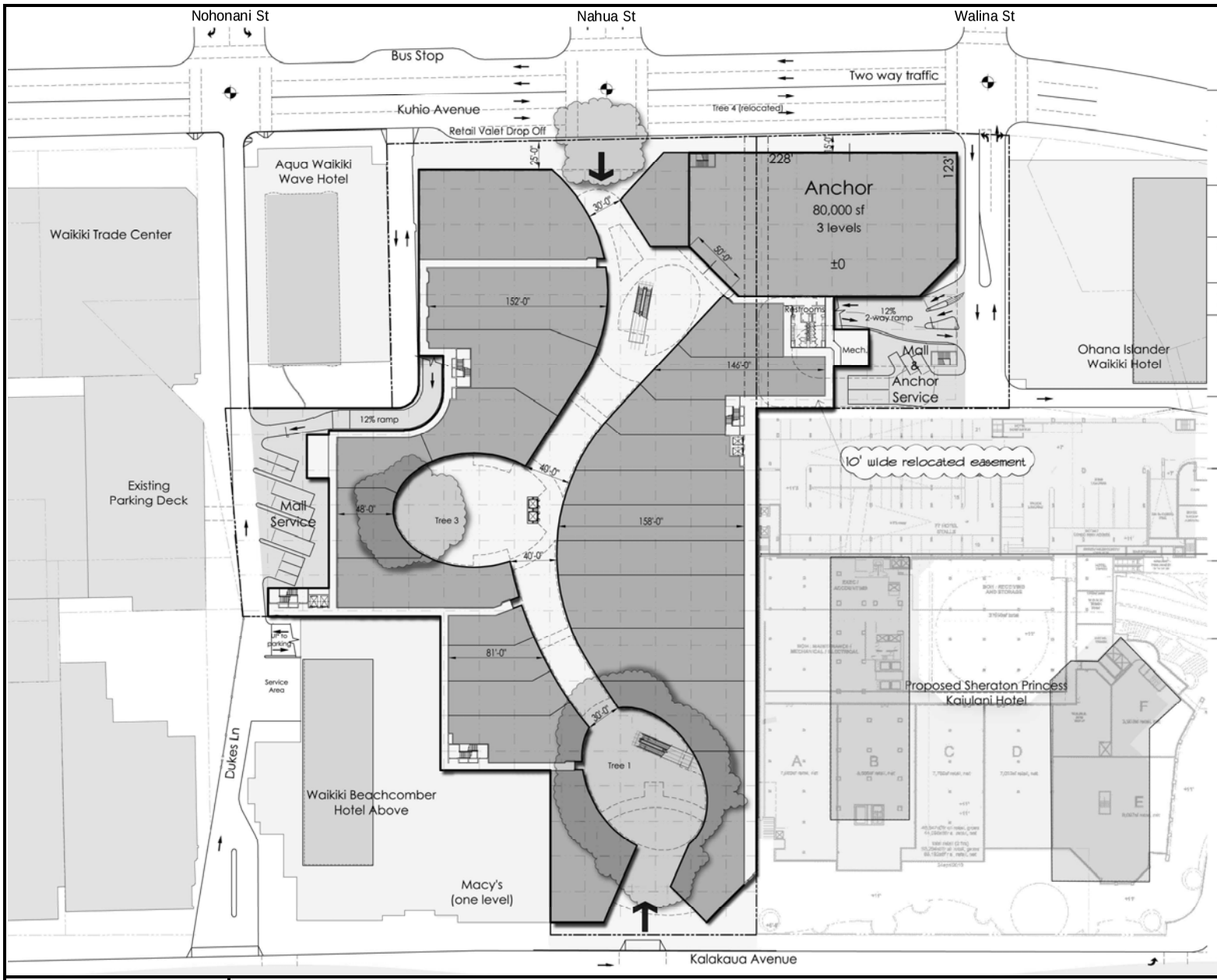

PROGRAM

Total Site Area		260,489 sf (5.98 Acres)
Total Entitled Area		529,342 sf
IMP Retail		
Tenant Shops	1st Level	108,000 sf
	2nd Level	102,000 sf
	3rd Level	10,000 sf
Sub-total Tenant Shops		**220,000 sf**
Restaurants (7)	3rd Level	55,000 sf
Sub-total In line GLA	3 Levels	275,000 sf
Anchor	3 Levels	80,000 sf
Total GLA:		**355,000 sf**

Parking Required	**= 275 spaces**
No requirement for Grade Level 1 sp/800 sf for Levels 2 & 3	(220,000 sf)
Parking Provided	on Roof Deck
Level 3 (+36')	60 spaces ±
Level 3.5 (+47')	100 spaces ±
Level 4 (+58')	175 spaces ±
Level 5 (+69')	175 spaces ±
Level 6 (+80')	200 spaces ±
TOTAL	**710 spaces ±**
Loading / Service Provided	**= 11 stalls**
(6 @ 12' x 35' + 5 @ 8'6" x 19')	

WILSON OKAMOTO CORPORATION
ENGINEERS - PLANNERS

INTERNATIONAL MARKET PLACE

PROPOSED SITE PLAN

FIGURE 2

North of the intersection with Kalakaua Avenue, Seaside Avenue intersects Kuhio Avenue, an alternate east-west access roadway through Waikiki that runs parallel to Kalakaua Avenue and Ala Wai Boulevard. At this signalized intersection, the eastbound approach of Kuhio Avenue has two lanes that serve left-turn and through traffic movements, and the westbound approach has two lanes that serve through and right-turn traffic movements, while the northbound approach of Seaside Avenue has exclusive turning lanes and one through lane.

East of the intersection with Seaside Avenue, Kuhio Avenue intersects Duke's Lane and Nohonani Street, a connector roadway between Kuhio Avenue and Ala Wai Boulevard generally oriented in the north-south direction. At this signalized intersection, the eastbound approach of Kuhio Avenue has two through lanes while the westbound approach has two lanes that serve through and right-turn traffic movements. The Duke's Lane approach of the intersection has one lane that serve all traffic movements while the Nohonani Street approach has one lane that serves left-turn and right-turn traffic movements.

Further east, Kuhio Avenue intersects Nahua Street, a one-way (northbound) connector roadway between Kuhio Avenue and Ala Wai Boulevard. At this signalized intersection, the eastbound approach of Kuhio Avenue has two lanes that serve left-turn and through traffic movements, and the westbound approach has two lanes that serve through and right-turn traffic movements while Nahua Street has one northbound departure lane.

Near the eastern edge of the project site, Kuhio Avenue intersects Walina Street, a one-way (southbound) connector roadway between Kuhio Avenue and Ala Wai Boulevard. At this signalized intersection, the eastbound approach of Kuhio Avenue has two lanes that serve through and right-turn traffic movements, and the westbound approach has two lanes that serve left-turn and through traffic movements. The Walina Street approach has two lanes that serve left-turn and right-turn traffic movements.

East of the intersection with Walina Street, Kuhio Avenue intersects Kanekapolei Street, a connector roadway between Kaiulani Avenue and Ala Wai Boulevard generally oriented in the north-south direction. At this signalized

intersection, the eastbound approach of Kuhio Avenue has an exclusive left-turn lane, one through lane, and a shared through and right-turn lane while the westbound approach has two lanes that serve all traffic movements. The northbound approach of Kanekapolei Street has two lanes that serve left-turn and through traffic movements while the southbound approach has two lanes that serve all traffic movements.

North of the intersection with Kuhio Avenue, Seaside Avenue intersects Ala Wai Boulevard. At this signalized intersection, Ala Wai Boulevard has three westbound lanes that serve left-turn and through traffic movements while the Seaside Avenue approach has two exclusive left-turn lanes.

East of the intersection with Seaside Avenue, Ala Wai Boulevard intersects Nohonani Street. At this unsignalized intersection, Ala Wai Boulevard has three westbound lanes that serve left-turn and through traffic movements while Nohonani Street has one lane that serves left-turn traffic movements.

Further east, Ala Wai Boulevard intersects Nahua Street. At this unsignalized intersection, Ala Wai Boulevard has three westbound through lanes while Nahua Street has one lane that serves left-turn traffic movements.

At the eastern end of the study area, Ala Wai Boulevard intersects Kanekapolei Street. At this signalized intersection, Ala Wai Boulevard has three westbound lanes that serve left-turn and through traffic movements while Kanekapolei Street has two exclusive left-turn lanes.

C. Traffic Volumes and Conditions

1. General

a. Field Investigation

Field investigations were conducted in November 2010 and August 2011, and consisted of manual turning movement count surveys in the project vicinity. The manual turning movement count surveys were conducted during the weekday afternoon peak hours of 3:00 PM to 6:00 PM and Saturday afternoon peak hours of 3:00 PM to 7:00 PM at the following intersections:

- Kalakaua Avenue and Seaside Avenue
- Kalakaua Avenue and Duke's Lane
- Kalakaua Avenue and Mid-Block Crossing Near International Market Place
- Kalakaua Avenue and Kaiulani Avenue
- Kuhio Avenue and Seaside Avenue
- Kuhio Avenue, Nohonani Street, and Duke's Lane
- Kuhio Avenue and Nahua Street
- Kuhio Avenue and Walina Street
- Kuhio Avenue and Kanekapolei Street
- Ala Wai Boulevard and Seaside Avenue
- Ala Wai Boulevard and Nohonani Street
- Ala Wai Boulevard and Nahua Street
- Ala Wai Boulevard and Walina Street
- Ala Wai Boulevard and Kanekapolei Street

Appendix A includes the existing traffic count data.

b. Capacity Analysis Methodology

The highway capacity analysis performed in this study is based upon procedures presented in the "Highway Capacity Manual", Transportation Research Board, 2000, and the "Synchro", developed by Trafficware. The analysis is based on the concept of Level of Service (LOS).

LOS is a quantitative and qualitative assessment of traffic operations. Levels of Service are defined by LOS "A" through "F"; LOS "A" representing ideal or free-flow traffic operating conditions and LOS "F" representing unacceptable or potentially congested traffic operating conditions.

"Volume-to-Capacity" (v/c) ratio is another measure indicating the relative traffic demand to the roadway carrying capacity. A v/c ratio of one (1.00) indicates that the roadway is operating at or near capacity. A v/c ratio of greater than 1.00 generally indicates that the traffic demand exceeds the road's carrying capacity. The LOS definitions are included in Appendix B.

2. Existing Peak Hour Traffic

a. General

Figures 3 and 4 show the existing weekday and Saturday PM peak period traffic volumes and traffic operating conditions. The weekday and Saturday PM peak hour of traffic generally occurs between the hours 4:00 PM and 5:00 PM. The analysis is based on these peak hour time periods for each intersection. LOS calculations are included in Appendix C.

b. Kalakaua Avenue and Seaside Avenue

At the intersection with Seaside Avenue, Kalakaua Avenue carries 1,616 vehicles and 1,721 vehicles eastbound at this intersection during the weekday and Saturday PM peak periods, respectively. This approach operates at the LOS "A" and LOS "B" during the weekday and Saturday PM peak periods, respectively. Traffic queues periodically formed on the Kalakaua Avenue approach of the intersection with average queue lengths of 4-6 vehicles observed during both peak periods. These queues were observed to clear the intersection after each traffic signal cycle change.

c. Kalakaua Avenue and Kaiulani Avenue

At the intersection with Kaiulani Avenue, Kalakaua Avenue carries 1,452 vehicles and 1,400 vehicles eastbound during the weekday and Saturday PM peak periods, respectively. The eastbound left-turn and through traffic movements operate at LOS "B" during both peak periods. Traffic queues periodically formed on the Kalakaua Avenue approach of the intersection with average queue lengths of 6-8 vehicles observed during both peak periods. These queues were observed to clear the intersection after each traffic signal cycle change.

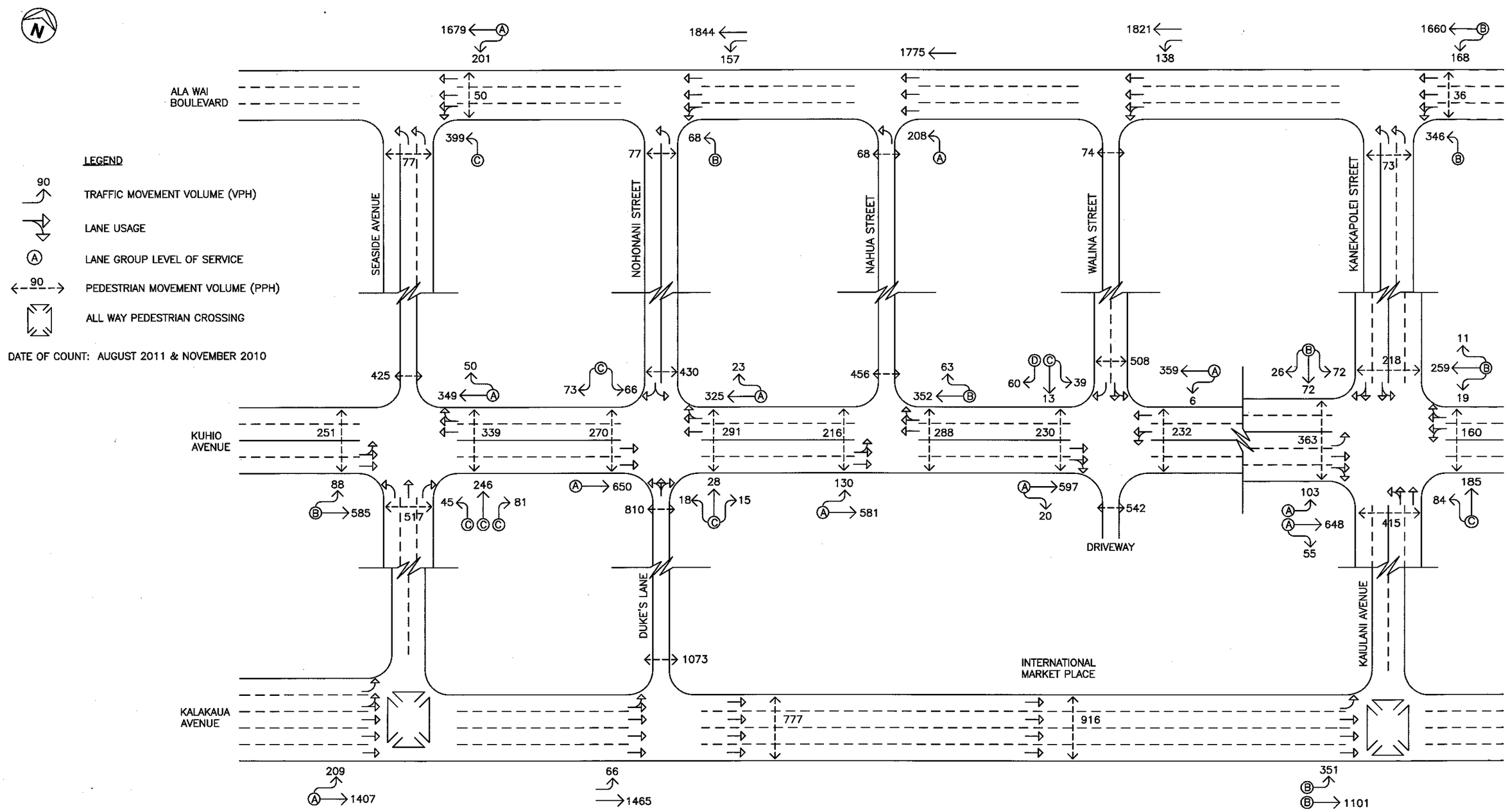

WILSON OKAMOTO CORPORATION
ENGINEERS • PLANNERS

INTERNATIONAL MARKET PLACE

EXISTING WEEKDAY PM PEAK HOUR OF TRAFFIC

FIGURE 3

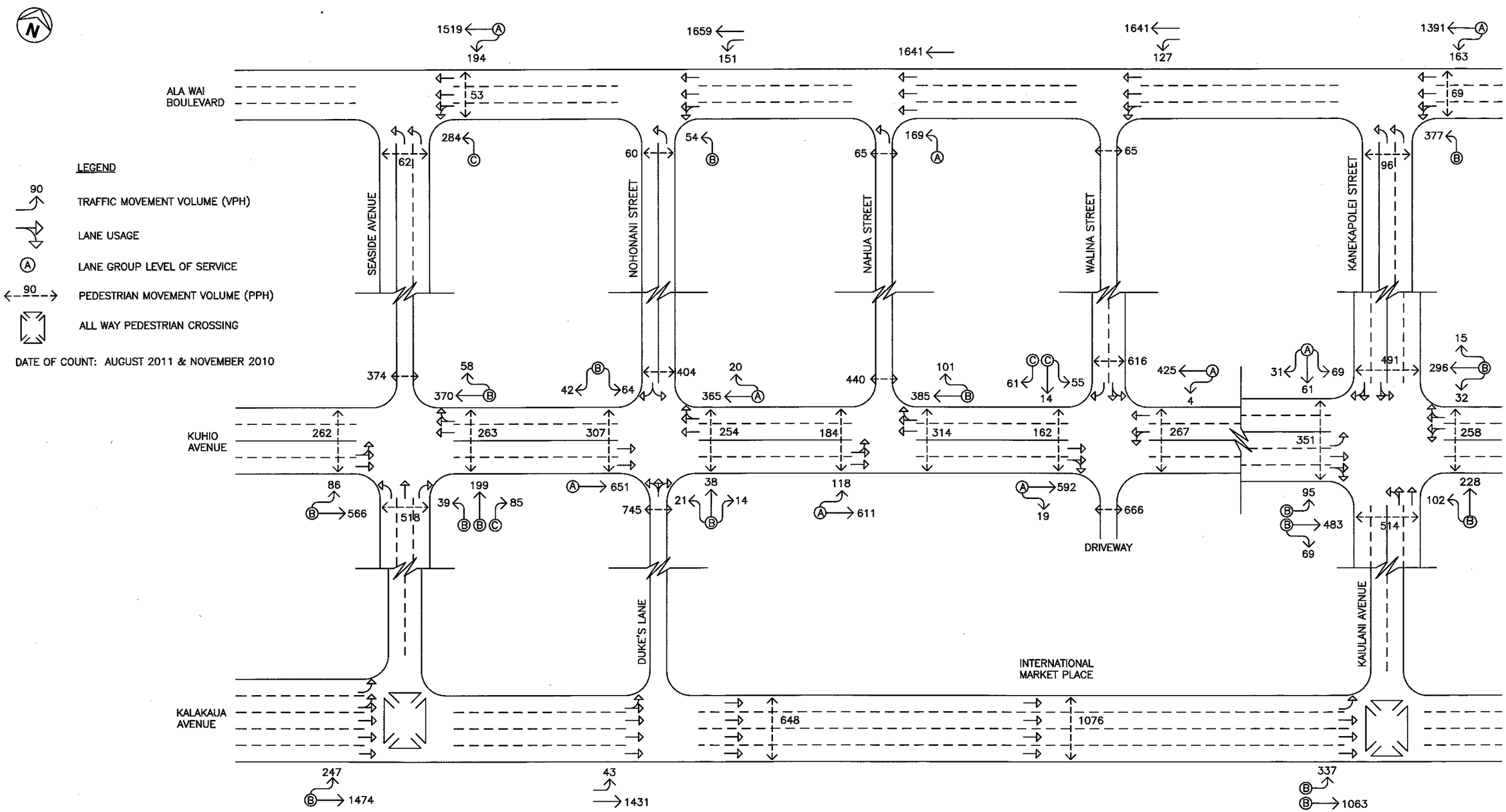

WILSON OKAMOTO CORPORATION
ENGINEERS • PLANNERS

INTERNATIONAL MARKET PLACE

EXISTING SATURDAY PM PEAK HOUR OF TRAFFIC

FIGURE 4

d. Kuhio Avenue and Seaside Avenue

At the intersection with Seaside Avenue, Kuhio Avenue carries 673 vehicles eastbound and 399 vehicles westbound during the weekday PM peak period, and 652 vehicles eastbound and 428 vehicles westbound during the Saturday PM peak period. The eastbound approach of Kuhio Avenue operates at LOS "B" during both peak periods while the westbound approach operates at LOS "A" and LOS "B" during the weekday and Saturday PM peak periods, respectively.

The Seaside Avenue approach of the intersection carries 372 vehicles and 323 vehicles northbound during the weekday and Saturday PM peak periods, respectively. The northbound left-turn and through traffic movements operate at LOS "C" and LOS "B" during the weekday and Saturday PM peak periods, respectively, while the right-turn traffic movement operates at LOS "C" during both peak periods.

Traffic queues periodically formed on the approaches of the intersection with average queue lengths of 3-5 vehicles observed during both peak periods. These queues were observed to clear the intersection after each traffic signal cycle change.

e. Kuhio Avenue, Nohonani Street, and Duke's Lane

At the intersection with Nohonani Street and Duke's Lane, Kuhio Avenue carries 650 vehicles eastbound and 348 vehicles westbound during the weekday PM peak period, and 651 vehicles eastbound and 385 vehicles westbound during the Saturday PM peak period. The Kuhio Avenue approaches of the intersection operate at LOS "A" during both peak periods.

The Duke's Lane approach of the intersection carries 61 vehicles and 73 vehicles northbound during the weekday and Saturday PM peak periods, respectively, while the Nohonani Street approach

carries 139 vehicles and 106 vehicles southbound during the weekday and Saturday PM peak periods, respectively. The Duke's Lane and Nohonani Street approaches operate at LOS "C" and LOS "B" during the weekday and Saturday PM peak periods, respectively.

Traffic queues periodically formed on the approaches of the intersection with the most significant queuing occurring along Kuhio Avenue. Average queue lengths of 2-4 vehicles were observed during both peak periods. These queues were observed to clear the intersection after each traffic signal cycle change.

f. Kuhio Avenue and Nahua Street

At the intersection with Nahua Street, Kuhio Avenue carries 711 vehicles eastbound and 415 vehicles westbound during the weekday PM peak period, and 729 vehicles eastbound and 486 vehicles westbound during the Saturday PM peak periods. The eastbound approach of Kuhio Avenue operates at LOS "A" during both peak periods while the westbound approach operates at LOS "B" during both peak periods. Traffic queues periodically formed on the Kuhio Avenue approaches of the intersection with average queue lengths of 2-4 vehicles observed during both peak periods. These queues were observed to clear the intersection after each traffic signal cycle change.

g. Kuhio Avenue and Walina Street

At the intersection with Walina Street, Kuhio Avenue carries 617 vehicles eastbound and 365 vehicles westbound during the weekday PM peak period, and 611 vehicles eastbound and 429 vehicles westbound during the Saturday PM peak period. Both approaches of Kuhio Avenue operate at LOS "A" during both peak periods.

The Walina Street approach of the intersection carries 112 vehicles and 130 vehicles southbound during the weekday and

Saturday PM peak periods, respectively. The southbound left-turn and through traffic movement operates at LOS "C' during both peak periods while the right-turn traffic movement operates at LOS "D" and LOS "C" during the weekday and Saturday PM peak periods, respectively.

Traffic queues periodically formed on the approaches of the intersection with the most significant queuing occurring along Kuhio Avenue. Average queue lengths of 3-5 vehicles were observed during both peak periods. These queues were observed to clear the intersection after each traffic signal cycle change.

h. Kuhio Avenue and Kanekapolei Street

At the intersection with Kanekapolei Street, Kuhio Avenue carries 806 vehicles eastbound and 289 vehicles westbound during the weekday PM peak period while 647 vehicles eastbound and 343 vehicles westbound during the Saturday PM peak period. The traffic movements on the eastbound approach of Kuhio Avenue operate at LOS "A" and LOS "B" during the weekday and Saturday PM peak periods, respectively, while the westbound approach operates at LOS "B" during both peak periods.

Kanekapolei Street carries 269 vehicles northbound and 170 vehicles southbound during the weekday PM peak period, and 330 vehicles northbound and 161 vehicles southbound during the Saturday PM peak period. The northbound approach of Kanekapolei Street operates at LOS "C" and LOS "B" during the weekday and Saturday PM peak periods, respectively, while the southbound approach operates at LOS "B" and LOS "A" during the weekday and Saturday PM peak periods, respectively.

Traffic queues periodically formed on the approaches of the intersection with average queue lengths of 2-4 vehicles observed

during both peak periods. These queues were observed to clear the intersection after each traffic signal cycle change.

i. Ala Wai Boulevard and Seaside Avenue

At the intersection with Seaside Avenue, Ala Wai Boulevard carries 1,880 vehicles and 1,713 vehicles eastbound during the weekday and Saturday PM peak periods, respectively, while Seaside Avenue carries 399 vehicles and 284 vehicles northbound during the weekday and Saturday PM peak periods, respectively. The Ala Wai Boulevard approach operates at LOS "A" during both peak periods while the Seaside Avenue approach operates at LOS "C" during both peak periods. Traffic queues periodically formed on the approaches of the intersection with average queue lengths of 8-10 vehicles observed along Ala Wai Boulevard during both peak periods and 4-6 vehicles observed along Seaside Avenue during both peak periods. These queues were observed to clear the intersection after each traffic signal cycle change.

j. Ala Wai Boulevard and Nohonani Street

At the intersection with Nohonani Street, Ala Wai Boulevard carries 2,001 vehicles and 1,810 vehicles eastbound during the weekday and Saturday PM peak periods, while Nohonani Street carries 68 vehicles and 54 vehicles northbound during the weekday and Saturday PM peak periods, respectively. The critical movement at the intersection is the Nohonani Street approach which operates at LOS "B" during both peak periods. Traffic queues occasionally formed on the Nohonani Street approach of the intersection with average queue lengths of 1-2 vehicles observed during both peak periods.

k. Ala Wai Boulevard and Nahua Street

At the intersection with Nahua Street, Ala Wai Boulevard carries 1,775 vehicles and 1,641 vehicles eastbound during the weekday and Saturday PM peak periods, respectively, while Nahua

Street carries 208 vehicles and 169 vehicles northbound during the weekday and Saturday PM peak periods, respectively. The critical movement at this intersection is the northbound approach which operates at LOS "A" during both peak periods. Traffic queues occasionally formed on the Nahua Street approach of the intersection with average queue lengths of 1-3 vehicles observed during both peak periods.

l. Ala Wai Boulevard and Kanekapolei Street

At the intersection with Kanekapolei Street, Ala Wai Boulevard carries 1,828 vehicles and 1,554 vehicles westbound during the weekday and Saturday PM peak periods, respectively, while Kanekapolei Street carries 346 vehicles and 377 vehicles northbound during the weekday and Saturday PM peak periods, respectively. The Ala Wai Boulevard approach operates at LOS "B" and LOS "A" during the weekday and Saturday PM peak periods, respectively, while the Kanekapolei Street approach operates at LOS "B" during both peak periods. Traffic queues periodically formed on the approaches of the intersection with average queue lengths of 8-10 vehicles observed along Ala Wai Boulevard during both peak periods and 5-7 vehicles observed along Kanekapolei Street during both peak periods. These queues were observed to clear the intersection after each traffic signal cycle change.

IV. PROJECTED TRAFFIC CONDITIONS

A. Site-Generated Traffic

1. Trip Generation Methodology

The trip generation methodology used in this study is based upon generally accepted techniques developed by the Institute of Transportation Engineers (ITE) and published in "Trip Generation, 8th Edition," 2008. The ITE trip generation rates are developed empirically by correlating the vehicle trip generation data with various land use characteristics such as the number of

vehicle trips generated per 1,000 square feet of development or hotel room. The site currently houses approximately 192,000 square feet of retail/restaurant uses and 357 hotel rooms. Since the project site is be located in a neighborhood with limited parking, high volumes of pedestrian traffic, and a high density of attractive destinations, many guests elect to walk to their destinations rather than drive. As such, the total number of trips assumed generated by the existing retail/restaurant areas was reduced by 70% to more accurately reflect existing conditions. In addition, a significant number of hotel guests elect to utilize abundant shuttle or bus services available to/from and within Waikiki. As such, the total number of trips assumed generated by the existing hotel rooms was reduced by 70% to more accurately reflect existing conditions. Table 1 summarizes the existing project site trip generation characteristics.

Table 1: Adjusted Existing Peak Hour Trip Generation

Shopping Center (Retail/Restaurant) INDEPENDENT VARIABLE: 1,000 sf of development = 192		
		PROJECTED TRIP ENDS
WEEKDAY PM PEAK	ENTER EXIT TOTAL	105 109 214
SATURDAY PM PEAK	ENTER EXIT TOTAL	122 127 249
Hotel INDEPENDENT VARIABLE: Hotel rooms = 357		
		PROJECTED TRIP ENDS
WEEKDAY PM PEAK	ENTER EXIT TOTAL	34 30 64
SATURDAY PM PEAK	ENTER EXIT TOTAL	34 30 64

Table 1: Adjusted Existing Peak Hour Trip Generation (Cont'd)

TOTALS		
		PROJECTED TRIP ENDS
WEEKDAY PM PEAK	ENTER	139
	EXIT	139
	TOTAL	278
SATURDAY PM PEAK	ENTER	156
	EXIT	157
	TOTAL	313

Similar to existing conditions, a portion of the guests destined for the proposed retail/restaurant areas are assumed to walk to the project site rather than drive. As such, the total number of trips generated by the proposed retail/restaurant areas was reduced by 70% to more accurately reflect anticipated conditions. Table 2 summarizes the projected site trip generation characteristics and the net difference from existing conditions applied to the weekday and Saturday PM peak periods of traffic.

Table 2: Adjusted Peak Hour Trip Generation

Shopping Center (Retail/Restaurant) INDEPENDENT VARIABLE: 1,000 sf of development = 355		
		PROJECTED TRIP ENDS
WEEKDAY PM PEAK	ENTER	195
	EXIT	203
	TOTAL	398
SATURDAY PM PEAK	ENTER	226
	EXIT	236
	TOTAL	462
NET DIFFERENCE		
		PROJECTED TRIP ENDS
WEEKDAY PM PEAK	ENTER	56
	EXIT	64
	TOTAL	120
SATURDAY PM PEAK	ENTER	70
	EXIT	79
	TOTAL	149

2. Trip Distribution

Figures 5 and 6 show the distribution of site-generated vehicular trips at the study intersections during the weekday and Saturday PM peak hours of traffic. Since the existing on-site hotel is not expected to be replaced with similar uses, traffic volumes along the surrounding roadway network were adjusted to account for the trips associated with the existing hotel uses. In addition, the trips associated with the existing retail/restaurant uses were reassigned to the network based upon the anticipated changes in access for the project site. Currently, there is limited on-site parking so most patrons utilize other parking areas within Waikiki. As such, trips associated with the existing retail/restaurant uses are assumed to already be utilizing the surrounding roadways and are expected to reroute to utilize the proposed on-site parking instead.

The directional distribution of all new site-generated vehicles was based upon a marketing study conducted for The Taubman Company which indicated that approximately 90% of patrons are expected to originate or be destined for neighborhoods east of the project site. However, for the purpose of this study, a more conservative 80%/20% split was assumed between patrons originating/destined for the east and those originating/destined for the west. Eastbound vehicles were assumed to either utilize Kuhio Avenue, directly or via Kalakaua Avenue, to access the project site while westbound vehicles were assumed to utilize either Ala Wai Boulevard or Kuhio Avenue. The distribution of eastbound vehicles between Kuhio Avenue and Kalakaua Avenue was based upon the existing directional distribution of traffic at the intersection of Kuhio Avenue with Seaside Avenue while westbound vehicles were distributed between Ala Wai Boulevard and Kuhio Avenue based upon the relative distribution of westbound vehicles between these two roadways.

Patrons of the new retail complex can elect to self-park or utilize the provided valet services. Based upon surveys of similar uses in the area, for

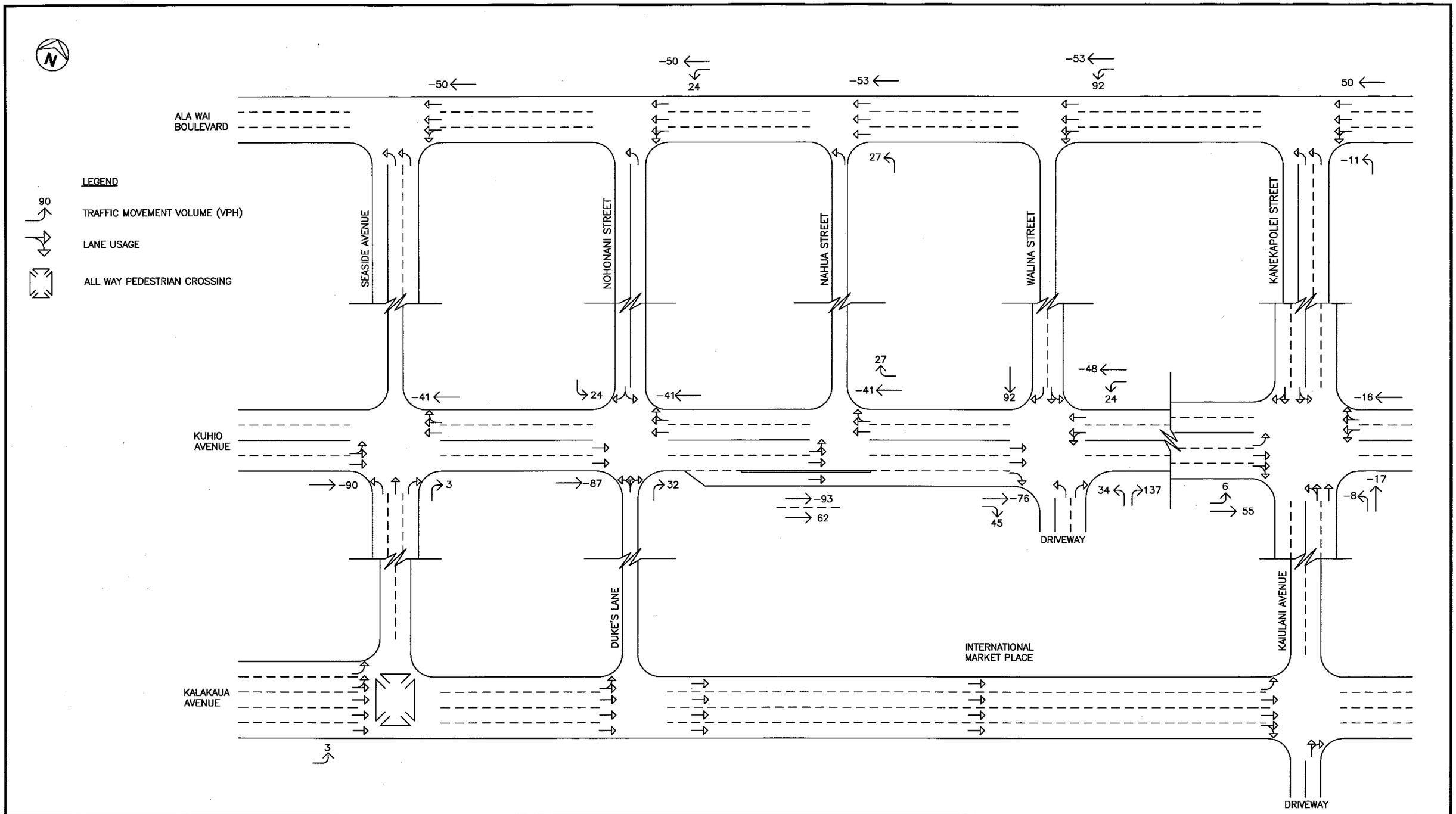

WILSON OKAMOTO CORPORATION
ENGINEERS • PLANNERS

INTERNATIONAL MARKET PLACE

DISTRIBUTION OF SITE-GENERATED VEHICLES - WEEKDAY PM PEAK HOUR OF TRAFFIC

FIGURE 5

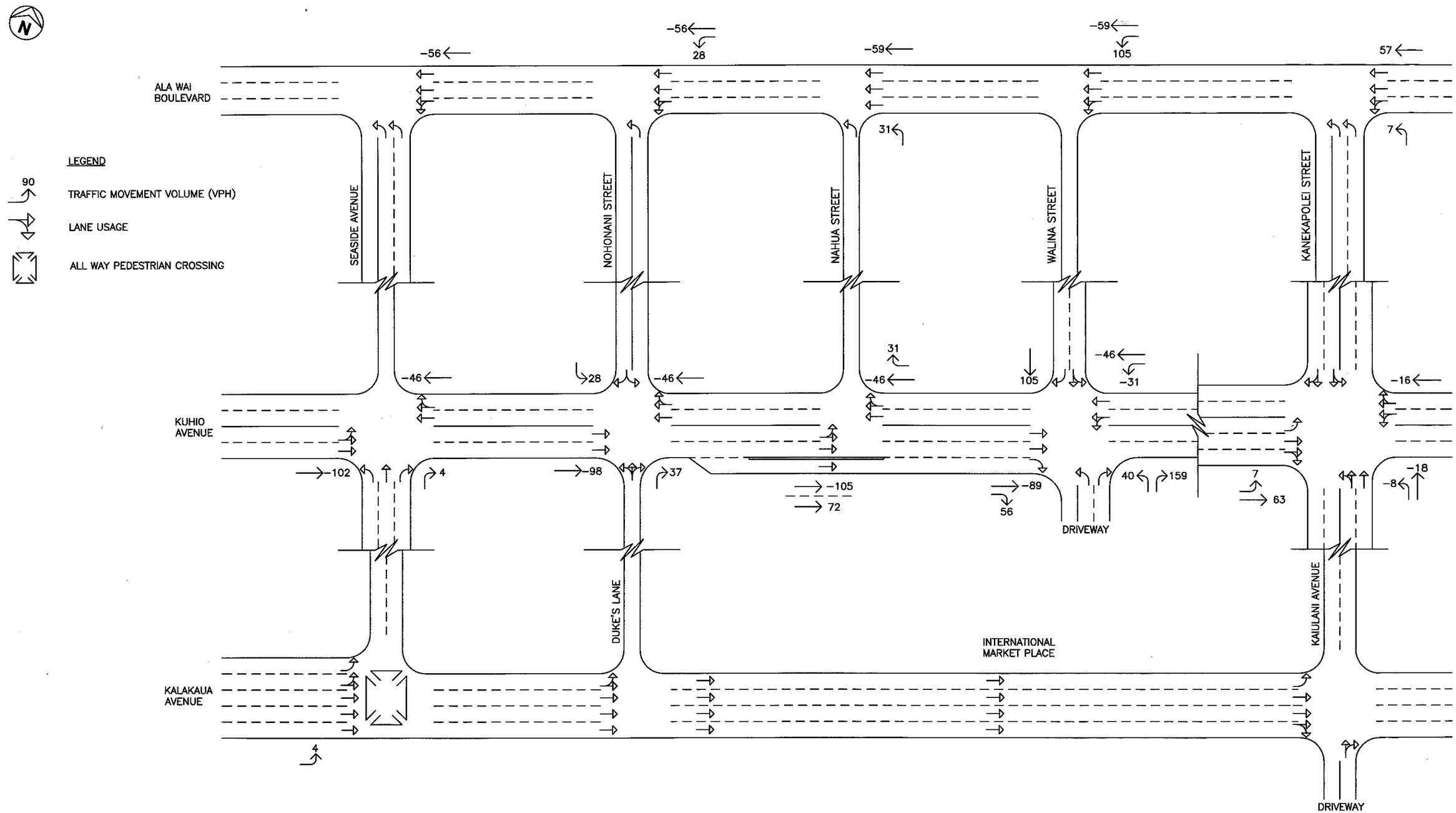

WILSON OKAMOTO CORPORATION
ENGINEERS · PLANNERS

INTERNATIONAL MARKET PLACE

DISTRIBUTION OF SITE-GENERATED VEHICLES - SATURDAY PM PEAK HOUR OF TRAFFIC

FIGURE 6

the purpose of this report, approximately 25% of the patrons were assumed to utilize the provided valet services. All patrons electing to self-park are assumed to utilize the primary access at the intersection of Kuhio Avenue and Walina Street while those electing to utilize valet services were distributed between the two valet service areas based upon the relative distribution of on-site uses. Vehicles accessing the valet service area near the east edge of the project site were assumed to utilize the primary access at the Kuhio Avenue/Walina Street intersection to access the valet services located on the first level of parking within the parking structure (Level 3) with valet personnel transferring the vehicles to and from this area via internal connections. Vehicles dropped off at the valet service area along Kuhio Avenue were assumed to be transferred to the garage by valet personnel via the primary vehicular access off Kuhio Avenue then returned to Kuhio Avenue via the driveway off Duke's Lane. All site-generated trips were assigned to the roadway network based upon their assumed origin or destination.

B. Through Traffic Forecasting Methodology

There are no State of Hawaii or City and County of Honolulu traffic count station in the immediate vicinity of the project site with sufficient available historical data to obtain a historical trend for the growth of traffic in the project vicinity. However, for the purpose of this report, an average annual growth rate of 2.0% per year was conservatively assumed along Kalakaua Avenue, Kuhio Avenue, and Ala Wai Boulevard to account for ambient growth in traffic. As such, using 2010 and 2011 as the Base Years, growth rate factors of 1.10 and 1.08, respectively, were applied to the existing through traffic demands along Kalakaua Avenue, Kuhio Avenue, and Ala Wai Boulevard to achieve the projected Year 2015 traffic demands.

C. Other Considerations

The Princess Kaiulani Hotel is located adjacent to Kaiulani Avenue between Kalakaua Avenue and Kanekapolei Street. As detailed in the "Traffic Impact Report for the Princess Kaiulani Renovation and Diamond Head Tower Development," there

are plans to renovate one of the existing hotel towers and construct a new parking garage, tower, and commercial podium. In addition, there are plans to replace the existing diamond head wing of the Moana Surfrider Hotel, located south of Kalakaua Avenue at the intersection with Kaiulani Avenue, with a new condominium/hotel. In conjunction with the Diamond Head Tower development, a new two-way driveway will be constructed on the south side of the Kalakaua Avenue and Kaiulani Avenue intersection necessitating the modification of the existing traffic signal phasing to accommodate the new vehicular approach. These projects are expected to be completed by the Year 2012 and, as such, were incorporated into without project conditions to account for proposed projects.

D. Total Traffic Volumes Without Project

The projected year 2015 weekday and Saturday PM peak period traffic volumes and operating conditions without the proposed International Market Place revitalization project are shown in Figures 7 and 8, and summarized in Table 3. The intersection of Kalakaua Avenue and Kaiulani Avenue is assumed to be modified to accommodate the inclusion of the northbound driveway approach from the Diamond Head Tower development. The existing levels of service are included for comparison purposes. LOS calculations are included in Appendix D.

Table 3: Existing and Projected (Without Project) LOS Traffic Operating Conditions

Intersection	Critical Traffic Movement		Weekday PM		Saturday PM	
			Exist	Year 2015 w/out Proj	Exist	Year 2015 w/out Proj
Kalakaua Ave/ Seaside Ave	Eastbound	LT-TH	A	A	B	B
Kalakaua Ave/ Kaiulani Ave	Eastbound	LT	B	C	B	C
		TH	B	A	B	A
	Northbound	TH-RT	-	C	-	C

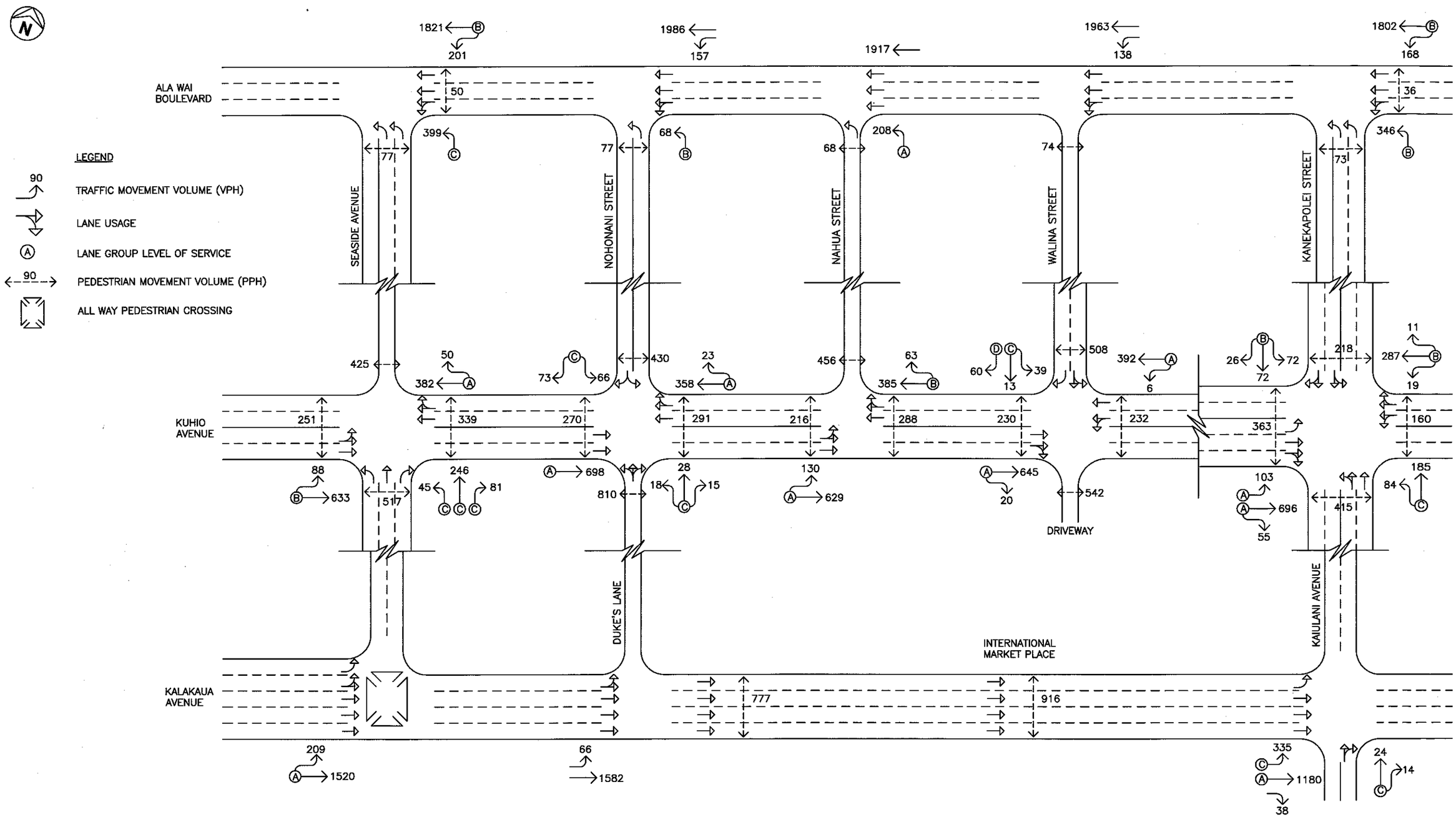

WILSON OKAMOTO CORPORATION
ENGINEERS · PLANNERS

INTERNATIONAL MARKET PLACE

YEAR 2015 WEEKDAY PM PEAK HOUR OF TRAFFIC WITHOUT PROJECT

FIGURE 7

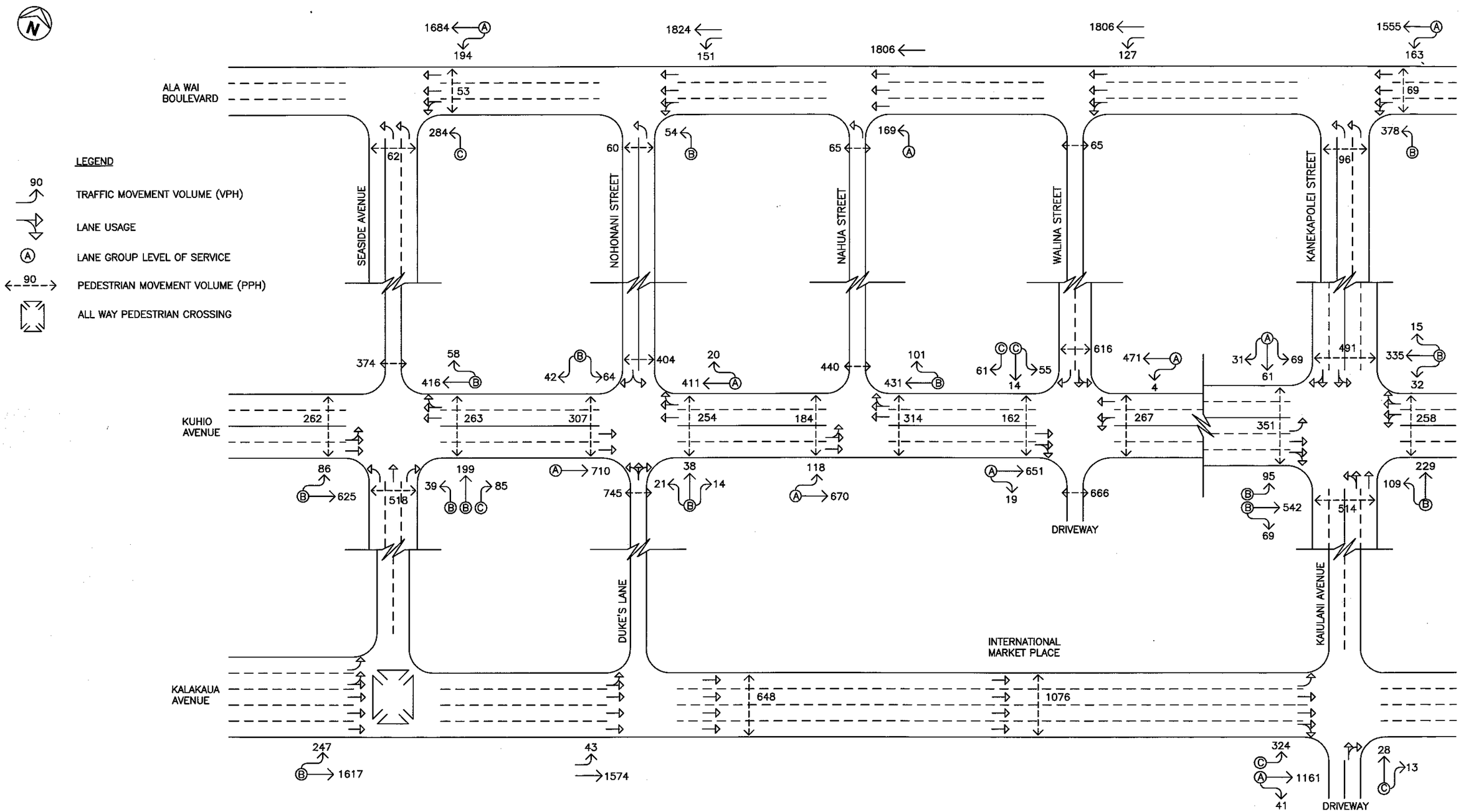

WILSON OKAMOTO CORPORATION
ENGINEERS · PLANNERS

INTERNATIONAL MARKET PLACE

YEAR 2015 SATURDAY PM PEAK HOUR OF TRAFFIC WITHOUT PROJECT

FIGURE 8

Table 3: Existing and Projected (Without Project) LOS Traffic Operating Conditions (Cont'd)

Intersection	Critical Traffic Movement		Weekday PM		Saturday PM	
			Exist	Year 2015 w/out Proj	Exist	Year 2015 w/out Proj
Kuhio Ave/ Seaside Ave	Eastbound	LT-TH	B	B	B	B
	Westbound	TH-RT	A	A	B	B
	Northbound	LT	C	C	B	B
		TH	C	C	B	B
		RT	C	C	C	C
Kuhio Ave/ Nohonani St/ Duke's Ln	Eastbound	TH	A	A	A	A
	Westbound	TH-RT	A	A	A	A
	Northbound	LT-TH-RT	C	C	B	B
	Southbound	LT-TH-RT	C	C	B	B
Kuhio Ave/ Nahua St	Eastbound	LT-TH	A	A	A	A
	Westbound	TH-RT	B	B	B	B
Kuhio Ave/ Walina St	Eastbound	TH-RT	A	A	A	A
	Westbound	LT-TH	A	A	A	A
	Southbound	LT-TH	C	C	C	C
		RT	D	D	C	C
Kuhio Ave/ Kanekapolei St	Eastbound	LT	A	A	B	B
		TH-RT	A	A	B	B
	Westbound	LT-TH-RT	B	B	B	B
	Northbound	LT-TH	C	C	B	B
	Southbound	LT-TH-RT	B	B	A	A
Ala Wai Blvd/ Seaside Ave	Westbound	LT-TH	A	B	A	A
	Northbound	LT	C	C	C	C
Ala Wai Blvd/ Nohonani St	Northbound	LT	B	B	B	B
Ala Wai Blvd/ Nahua St	Northbound	LT	A	A	A	A
Ala Wai Blvd/ Kanekapolei St	Westbound	LT-TH	B	B	A	A
	Northbound	LT	B	B	B	B

Under Year 2015 without project conditions, traffic operations are expected, in general, to remain similar to existing conditions. The westbound left-turn and through traffic movement at the intersection of Seaside Avenue with Ala Wai Boulevard is expected to operate at a slightly lower LOS "B" during the weekday PM peak period. The remaining critical traffic movements at this intersection, as well as, the other study intersection are expected to operate at levels of service similar to existing conditions during the weekday and Saturday PM peak periods with the exception of the Kalakaua Avenue and Kaiulani Avenue intersection. The traffic movements at this intersection are expected to operate at LOS "C" or better during both peak periods with the addition of the Diamond Head Tower development's driveway to that intersection.

E. Total Traffic Volumes With Project

Figures 9 and 10 show the Year 2015 cumulative weekday and Saturday PM peak hour traffic conditions with the proposed redevelopment of the International Market Place. The cumulative volumes consist of site- generated traffic superimposed over Year 2015 projected traffic demands. The traffic impacts resulting from the proposed project are addressed in the following section.

V. TRAFFIC IMPACT ANALYSIS

The Year 2015 cumulative weekday and Saturday PM peak hour traffic conditions with the proposed International Market Place revitalization project are summarized in Table 4. The intersection of Kuhio Avenue and Walina Street is assumed to be modified to include the new primary vehicular access for the proposed project, as well as, provide an exclusive eastbound right-turn lane. In addition, the traffic signal system at that intersection is assumed to be modified to accommodate the proposed lane use changes at that intersection. The existing and projected Year 2015 (Without Project) operating conditions are provided for comparison purposes. LOS calculations are included in Appendix E.

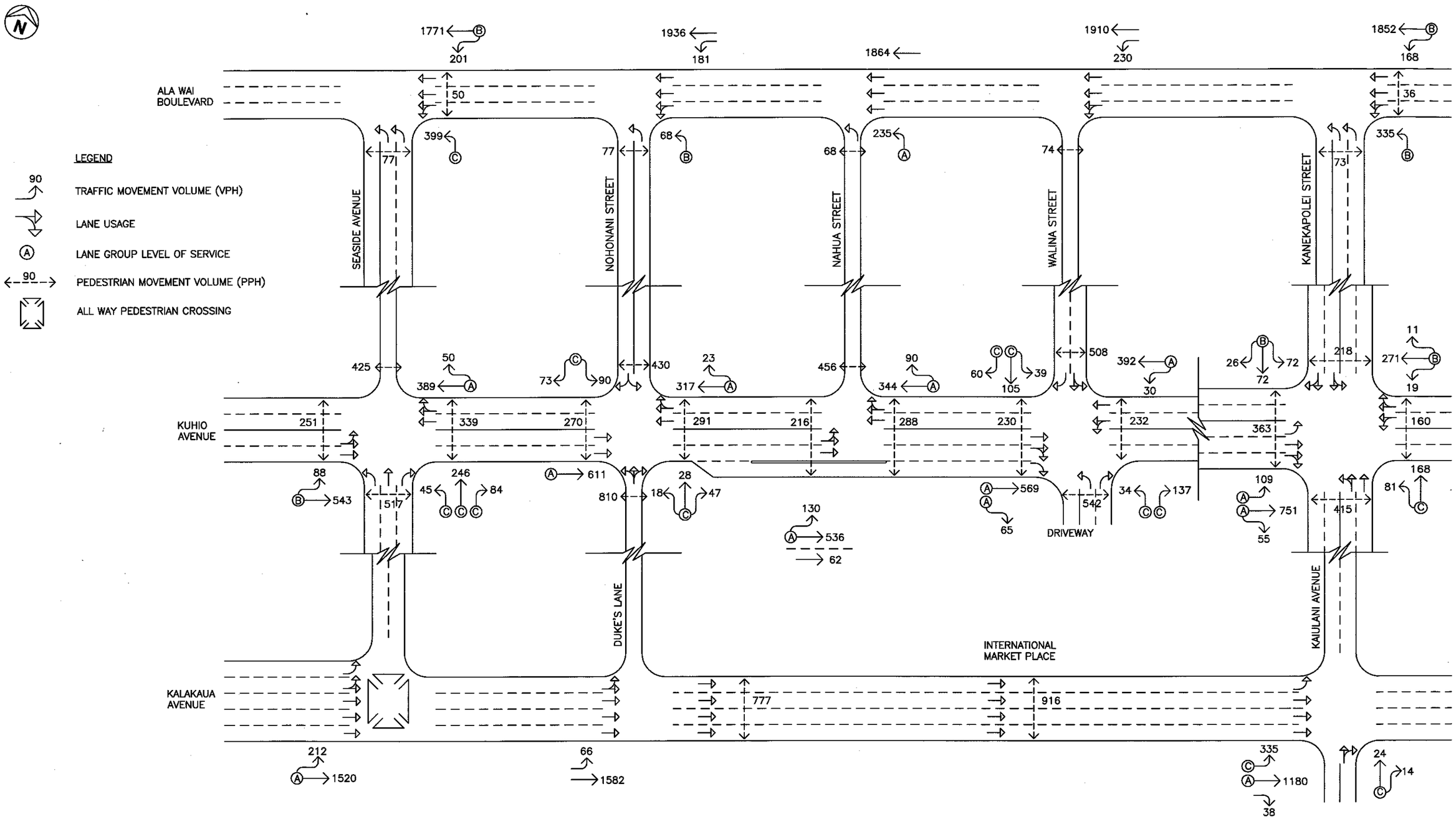

WILSON OKAMOTO CORPORATION
ENGINEERS · PLANNERS

INTERNATIONAL MARKET PLACE

YEAR 2015 WEEKDAY PM PEAK HOUR OF TRAFFIC WITH PROJECT

FIGURE 9

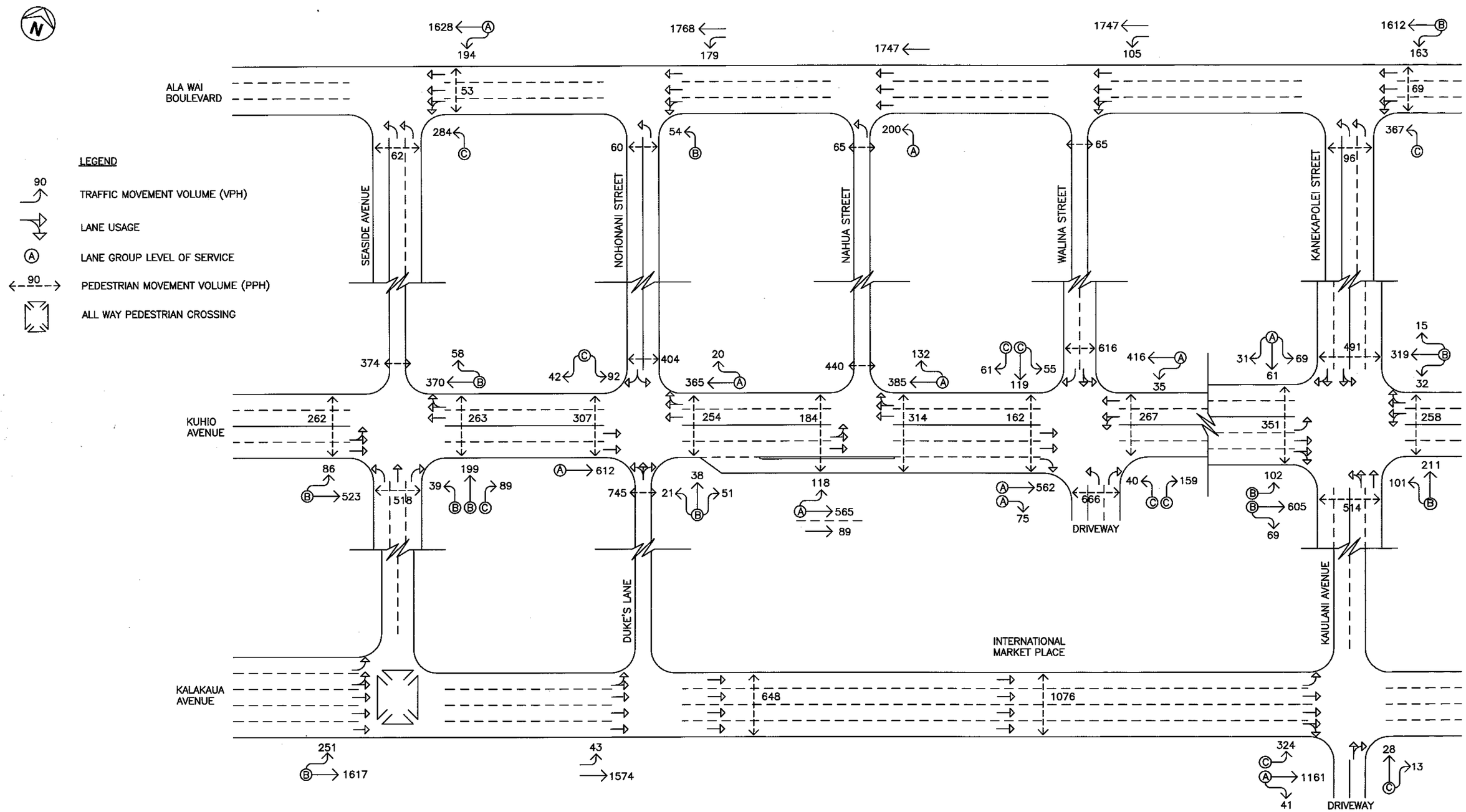

WILSON OKAMOTO CORPORATION
ENGINEERS · PLANNERS

INTERNATIONAL MARKET PLACE

YEAR 2015 SATURDAY PM PEAK HOUR OF TRAFFIC WITH PROJECT

FIGURE 10

Table 4: Existing and Projected (Without and With Project) LOS Traffic Operating Conditions

Intersection	Critical Traffic Movement		Weekday PM			Saturday PM		
			Exist	Year 2015		Exist	Year 2015	
				w/out Proj	w/ Proj		w/out Proj	w/ Proj
Kalakaua Ave/ Seaside Ave	EB	LT-TH	A	A	A	B	B	B
Kalakaua Ave/ Kaiulani Ave	EB	LT	B	C	C	B	C	C
		TH	B	A	A	B	A	A
	NB	TH-RT	-	C	C	-	C	C
Kuhio Ave/ Seaside Ave	EB	LT-TH	B	B	B	B	B	B
	WB	TH-RT	A	A	A	B	B	B
	NB	LT	C	C	C	B	B	B
		TH	C	C	C	B	B	B
		RT	C	C	C	C	C	C
Kuhio Ave/ Nohonani St/ Duke's Ln	EB	TH	A	A	A	A	A	A
	WB	TH-RT	A	A	A	A	A	A
	NB	LT-TH-RT	C	C	C	B	B	B
	SB	LT-TH-RT	C	C	C	B	B	C
Kuhio Ave/ Nahua St	EB	LT-TH	A	A	A	A	A	A
	WB	TH-RT	B	B	A	B	B	A
Kuhio Ave/ Walina St	EB	TH	A	A	A	A	A	A
		RT			A			A
	WB	LT-TH	A	A	A	A	A	A
	NB	LT	-	-	C	-	-	C
		RT	-	-	C	-	-	C
	SB	LT-TH	C	C	C	C	C	C
		RT	D	D	C	C	C	C
Kuhio Ave/ Kanekapolei St	EB	LT	A	A	A	B	B	B
		TH-RT	A	A	A	B	B	B
	WB	LT-TH-RT	B	B	B	B	B	B
	NB	LT-TH	C	C	C	B	B	B
	SB	LT-TH-RT	B	B	B	A	A	A
Ala Wai Blvd/ Seaside Ave	WB	LT-TH	A	B	B	A	A	A
	NB	LT	C	C	C	C	C	C
Ala Wai Blvd/ Nohonani St	NB	LT	B	B	B	B	B	B

Table 4: Existing and Projected (Without and With Project) LOS Traffic Operating Conditions (Cont'd)

Intersection	Critical Traffic Movement		Weekday PM			Saturday PM		
			Exist	Year 2015		Exist	Year 2015	
				w/out Proj	w/ Proj		w/out Proj	w/ Proj
Ala Wai Blvd/ Nahua St	NB	LT	A	A	A	A	A	A
Ala Wai Blvd/ Kanekapolei St	WB	LT-TH	B	B	B	A	A	A
	NB	LT	B	B	B	B	B	C

Traffic operations under Year 2015 with project conditions are expected, in general, to remain similar to Year 2015 without project conditions during both peak periods. Along Kalakaua Avenue, the traffic movements at the intersection with Seaside Avenue are expected to continue operating at LOS "B" or better during both peak periods while those at the intersection with Kaiulani Avenue are expected to continue operating at LOS "C" or better during both peak periods. Along Kuhio Avenue, the traffic movements at the intersection with Seaside Avenue are expected to continue operating at LOS "C" or better during both peak periods while those at the intersection with Kanekapolei Street are expected to continue operating at LOS "C" or better during the weekday PM peak period and LOS "B" or better during the Saturday PM peak period. At the intersection with Nahua Street, the traffic movements are expected to operate at LOS "A" during both peak periods while those at the intersections with Nohonani Street/Duke's Lane and Walina Street are expected to operate at LOS "C" or better during both peak periods. Along Ala Wai Boulevard, the traffic movements at the intersections with Seaside Avenue and Kanekapolei Street are expected to continue operating at LOS "C" or better during both peak periods while those at the remaining study intersections along that roadway are expected to continue operating at LOS "B" or better during both peak periods.

Although Year 2015 with project conditions are expected to remain similar to without project conditions, the proposed project is located in a densely developed area with a high volume of pedestrian and vehicular traffic. As such, a traffic management plan is

recommended for the International Market Place revitalization project to minimize conflicts with traffic associated with the development.

VI. RECOMMENDATIONS

Based on the analysis of the traffic data, the following are the recommendations associated with the proposed International Market Place revitalization project:

1. Provide sufficient sight distance for motorists to safely enter and exit all project driveways.

2. Provide adequate on-site loading and off-loading service areas and prohibit off-site loading operations.

3. Provide adequate turn-around area for service, delivery, and refuse collection vehicles to maneuver on the project site to avoid vehicle-reversing maneuvers onto adjacent public roadways.

4. Provide sufficient turning radii at all driveways to avoid or minimize vehicle encroachments to oncoming traffic lanes.

5. Align the primary vehicular access with Walina Street at the intersection with Kuhio Avenue to minimize conflicts between turning vehicles.

6. Modify the traffic signal phasing and timing at the intersection of Kuhio Avenue with Walina Street to accommodate the addition of the primary vehicular access for the proposed project to the intersection.

7. Align the primary pedestrian access along Kuhio Avenue with the intersection with Nahua Street.

8. Align the primary pedestrian access along Kalakaua Avenue with the existing signalized mid-block crosswalk.

9. Provide an additional eastbound lane along Kuhio Avenue between the proposed valet pull-out and the primary access at the intersection with Walina Street to minimize the impact of valet operations on Kuhio Avenue.

10. Provide a physical barrier between the eastbound through lanes of traffic along Kuhio Avenue and the auxiliary lane extending from the valet pull-out at the intersection with Nahua Street to eliminate vehicular conflicts with vehicles utilizing valet services.

11. Provide exclusive left-turn and right-turn lanes along the primary vehicular access at the intersection of Kuhio Avenue with Walina Street.

12. Ensure that queuing from the valet pull-out along Kuhio Avenue does not extend onto the adjacent public roadway.

13. Prepare a Traffic Management Plan (TMP) for the International Market Place that includes traffic demand management strategies, as well as, traffic circulation, parking and loading management strategies.

VII. CONCLUSION

The proposed project entails the replacement of the existing International Market Place adjacent to Kalakaua Avenue which houses a variety of shops, carts, restaurants, and hotel uses with a new retail complex. With the implementation of the aforementioned recommendations, the proposed International Market Place revitalization project is not expected to have a significant impact on traffic operations in the project vicinity. The traffic movements at the study intersections in the vicinity are expected to continue operating at levels of service similar to without project conditions. Although traffic conditions with the proposed redevelopment are expected to remain similar to without project conditions, the preparation of a Traffic Management Plan is recommended to further minimize the impact of the project on the surrounding roadways.

APPENDIX A

EXISTING TRAFFIC COUNT DATA

Wilson Okamoto Corporation

1907 S. Beretania Street, Suite 400
Honolulu, Hawaii

Counter:TU-0653, TU-0654
Counted By:RJ, DY
Weather:Clear

File Name : KalSea PM
Site Code : 00000001
Start Date : 8/30/2011
Page No : 1

Groups Printed- Unshifted

	Seaside Avenue Southbound					Kalakaua Avenue Westbound					Northbound	Kalakaua Avenue Eastbound					
Start Time	Left	Thru	Right	Peds	App. Total	Left	Thru	Right	Peds	App. Total	App. Total	Left	Thru	Right	Peds	App. Total	Int. Total
03:00 PM	0	0	0	159	159	0	0	0	149	149	0	63	257	0	63	383	691
03:15 PM	0	0	0	227	227	0	0	0	114	114	0	52	339	0	71	462	803
03:30 PM	0	0	0	226	226	0	0	0	137	137	0	58	390	0	53	501	864
03:45 PM	0	0	0	189	189	0	0	0	144	144	0	57	396	0	59	512	845
Total	0	0	0	801	801	0	0	0	544	544	0	230	1382	0	246	1858	3203
04:00 PM	0	0	0	167	167	0	0	0	127	127	0	57	373	0	79	509	803
04:15 PM	0	0	0	193	193	0	0	0	141	141	0	58	334	0	76	468	802
04:30 PM	0	0	0	197	197	0	0	0	110	110	0	50	333	0	65	448	755
04:45 PM	0	0	0	218	218	0	0	0	106	106	0	44	367	0	96	507	831
Total	0	0	0	775	775	0	0	0	484	484	0	209	1407	0	316	1932	3191
05:00 PM	0	0	0	265	265	0	0	0	177	177	0	56	381	0	75	512	954
05:15 PM	0	0	0	289	289	0	0	0	143	143	0	57	390	0	53	500	932
05:30 PM	0	0	0	268	268	0	0	0	128	128	0	43	386	0	66	495	891
05:45 PM	0	0	0	250	250	0	0	0	186	186	0	31	373	0	84	488	924
Total	0	0	0	1072	1072	0	0	0	634	634	0	187	1530	0	278	1995	3701
Grand Total	0	0	0	2648	2648	0	0	0	1662	1662	0	626	4319	0	840	5785	10095
Apprch %	0	0	0	100		0	0	0	100			10.8	74.7	0	14.5		
Total %	0	0	0	26.2	26.2	0	0	0	16.5	16.5	0	6.2	42.8	0	8.3	57.3	

	Seaside Avenue Southbound				Kalakaua Avenue Westbound				Northbound	Kalakaua Avenue Eastbound				
Start Time	Left	Thru	Right	App. Total	Left	Thru	Right	App. Total	App. Total	Left	Thru	Right	App. Total	Int. Total
Peak Hour Analysis From 03:00 PM to 05:45 PM - Peak 1 of 1														
Peak Hour for Entire Intersection Begins at 04:45 PM														
04:45 PM	0	0	0	0	0	0	0	0	0	44	367	0	411	411
05:00 PM	0	0	0	0	0	0	0	0	0	56	381	0	437	437
05:15 PM	0	0	0	0	0	0	0	0	0	**57**	**390**	0	**447**	**447**
05:30 PM	0	0	0	0	0	0	0	0	0	43	386	0	429	429
Total Volume	0	0	0	0	0	0	0	0	0	200	1524	0	1724	1724
% App. Total	0	0	0		0	0	0			11.6	88.4	0		
PHF	.000	.000	.000	.000	.000	.000	.000	.000	.000	.877	.977	.000	.964	.964

Wilson Okamoto Corporation

1907 S. Beretania Street, Suite 400
Honolulu, Hawaii

Counter;TU-0650
Counted By:RF
Weather:Clear

File Name : KalDuke PM
Site Code : 00000000
Start Date : 8/30/2011
Page No : 1

Groups Printed- Unshifted

	Duke's Lane Southbound					Westbound	Northbound	Kalakaua Avenue Eastbound					
Start Time	Left	Thru	Right	Peds	App. Total	App. Total	App. Total	Left	Thru	Right	Peds	App. Total	Int. Total
03:00 PM	0	0	0	228	228	0	0	16	252	0	128	396	624
03:15 PM	0	0	0	295	295	0	0	8	337	0	139	484	779
03:30 PM	0	0	0	339	339	0	0	16	393	0	118	527	866
03:45 PM	0	0	0	233	233	0	0	20	381	0	176	577	810
Total	0	0	0	1095	1095	0	0	60	1363	0	561	1984	3079
04:00 PM	0	0	0	251	251	0	0	19	362	0	170	551	802
04:15 PM	0	0	0	280	280	0	0	22	379	0	164	565	845
04:30 PM	0	0	0	268	268	0	0	9	339	0	182	530	798
04:45 PM	0	0	0	274	274	0	0	16	385	0	261	662	936
Total	0	0	0	1073	1073	0	0	66	1465	0	777	2308	3381
05:00 PM	0	0	0	465	465	0	0	15	388	0	189	592	1057
05:15 PM	0	0	0	342	342	0	0	9	384	0	218	611	953
05:30 PM	0	0	0	362	362	0	0	21	400	0	252	673	1035
05:45 PM	0	0	0	380	380	0	0	39	339	0	165	543	923
Total	0	0	0	1549	1549	0	0	84	1511	0	824	2419	3968
Grand Total	0	0	0	3717	3717	0	0	210	4339	0	2162	6711	10428
Apprch %	0	0	0	100				3.1	64.7	0	32.2		
Total %	0	0	0	35.6	35.6	0	0	2	41.6	0	20.7	64.4	

	Duke's Lane Southbound				Westbound	Northbound	Kalakaua Avenue Eastbound				
Start Time	Left	Thru	Right	App. Total	App. Total	App. Total	Left	Thru	Right	App. Total	Int. Total
Peak Hour Analysis From 03:00 PM to 05:45 PM - Peak 1 of 1											
Peak Hour for Entire Intersection Begins at 04:45 PM											
04:45 PM	0	0	0	0	0	0	16	385	0	401	401
05:00 PM	0	0	0	0	0	0	15	388	0	403	403
05:15 PM	0	0	0	0	0	0	9	384	0	393	393
05:30 PM	0	0	0	0	0	0	**21**	**400**	0	**421**	**421**
Total Volume	0	0	0	0	0	0	61	1557	0	1618	1618
% App. Total	0	0	0				3.8	96.2	0		
PHF	.000	.000	.000	.000	.000	.000	.726	.973	.000	.961	.961

Wilson Okamoto Corporation

1907 S. Beretania Street, Suite 400
Honolulu, Hawaii

Counter:TU-0649
Counted By:PA
Weather:Clear

File Name : KalImp PM
Site Code : 00000000
Start Date : 8/30/2011
Page No : 1

Groups Printed- Unshifted

	Southbound	Westbound	Northbound	Kalakaua Avenue Eastbound					
Start Time	App. Total	App. Total	App. Total	Left	Thru	Right	Peds	App. Total	Int. Total
03:00 PM	0	0	0	0	292	0	231	523	523
03:15 PM	0	0	0	0	374	0	176	550	550
03:30 PM	0	0	0	0	391	0	244	635	635
03:45 PM	0	0	0	0	352	0	195	547	547
Total	0	0	0	0	1409	0	846	2255	2255
04:00 PM	0	0	0	0	340	0	255	595	595
04:15 PM	0	0	0	0	403	0	201	604	604
04:30 PM	0	0	0	0	357	0	216	573	573
04:45 PM	0	0	0	0	365	0	244	609	609
Total	0	0	0	0	1465	0	916	2381	2381
05:00 PM	0	0	0	0	400	0	170	570	570
05:15 PM	0	0	0	0	439	0	245	684	684
05:30 PM	0	0	0	0	372	0	207	579	579
05:45 PM	0	0	0	0	370	0	198	568	568
Total	0	0	0	0	1581	0	820	2401	2401
Grand Total	0	0	0	0	4455	0	2582	7037	7037
Apprch %				0	63.3	0	36.7		
Total %	0	0	0	0	63.3	0	36.7	100	

	Southbound	Westbound	Northbound	Kalakaua Avenue Eastbound				
Start Time	App. Total	App. Total	App. Total	Left	Thru	Right	App. Total	Int. Total
Peak Hour Analysis From 03:00 PM to 05:45 PM - Peak 1 of 1								
Peak Hour for Entire Intersection Begins at 05:00 PM								
05:00 PM	0	0	0	0	400	0	400	400
05:15 PM	0	0	0	0	**439**	0	**439**	**439**
05:30 PM	0	0	0	0	372	0	372	372
05:45 PM	0	0	0	0	370	0	370	370
Total Volume	0	0	0	0	1581	0	1581	1581
% App. Total				0	100	0		
PHF	.000	.000	.000	.000	.900	.000	.900	.900

Wilson Okamoto Corporation
1907 S. Beretania Street, Suite 400
Honolulu, Hawaii

Counter:D4-5673, TU-0651, TU-0652
Counted By:GC, EV,JY
Weather:Clear

File Name : KalKai PM
Site Code : 00000004
Start Date : 8/30/2011
Page No : 1

Groups Printed- Unshifted

	Kaiulani Avenue Southbound					Kalakaua Avenue (Numbers In Peds Column Indicates NB Ped Traffic From Moana Hotel Sidewalk To Hyatt Hotel Corner) Westbound					Moana Hotel Sidewalk Northbound					Kalakaua Avenue (Numbers In Peds Column Indicates NB Ped Traffic From Moana Hotel Sidewalk To Princess Kaiulani Corner) Eastbound					
Start Time	Left	Thru	Right	Peds	App. Total	Left	Thru	Right	Peds	App. Total	Left	Thru	Right	Peds	App. Total	Left	Thru	Right	Peds	App. Total	Int. Total
03:00 PM	0	0	0	214	214	0	0	0	24	24	0	0	0	275	275	75	166	0	64	305	818
03:15 PM	0	0	0	197	197	0	0	0	32	32	0	0	0	289	289	83	236	0	79	398	916
03:30 PM	0	0	0	156	156	0	0	0	75	75	0	0	0	333	333	115	319	0	88	522	1086
03:45 PM	0	0	0	177	177	0	0	0	66	66	0	0	0	329	329	94	271	0	80	445	1017
Total	0	0	0	744	744	0	0	0	197	197	0	0	0	1226	1226	367	992	0	311	1670	3837
04:00 PM	0	0	0	188	188	0	0	0	75	75	0	0	0	362	362	84	281	0	112	477	1102
04:15 PM	0	0	0	205	205	0	0	0	37	37	0	0	0	306	306	102	287	0	86	475	1023
04:30 PM	0	0	0	166	166	0	0	0	35	35	0	0	0	309	309	86	247	0	87	420	930
04:45 PM	0	0	0	224	224	0	0	0	49	49	0	0	0	372	372	79	286	0	88	453	1098
Total	0	0	0	783	783	0	0	0	196	196	0	0	0	1349	1349	351	1101	0	373	1825	4153
05:00 PM	0	0	0	207	207	0	0	0	66	66	0	0	0	332	332	80	308	0	97	485	1090
05:15 PM	0	0	0	224	224	0	0	0	89	89	0	0	0	371	371	74	304	0	88	466	1150
05:30 PM	0	0	0	206	206	0	0	0	81	81	0	0	0	352	352	86	295	0	75	456	1095
05:45 PM	0	0	0	275	275	0	0	0	80	80	0	0	0	411	411	84	265	0	84	433	1199
Total	0	0	0	912	912	0	0	0	316	316	0	0	0	1466	1466	324	1172	0	344	1840	4534
Grand Total	0	0	0	2439	2439	0	0	0	709	709	0	0	0	4041	4041	1042	3265	0	1028	5335	12524
Apprch %	0	0	0	100		0	0	0	100		0	0	0	100		19.5	61.2	0	19.3		
Total %	0	0	0	19.5	19.5	0	0	0	5.7	5.7	0	0	0	32.3	32.3	8.3	26.1	0	8.2	42.6	

	Kaiulani Avenue Southbound				Kalakaua Avenue (Numbers In Peds Column Indicates NB Ped Traffic From Moana Hotel Sidewalk To Hyatt Hotel Corner) Westbound				Moana Hotel Sidewalk Northbound				Kalakaua Avenue (Numbers In Peds Column Indicates NB Ped Traffic From Moana Hotel Sidewalk To Princess Kaiulani Corner) Eastbound				
Start Time	Left	Thru	Right	App. Total	Left	Thru	Right	App. Total	Left	Thru	Right	App. Total	Left	Thru	Right	App. Total	Int. Total
Peak Hour Analysis From 03:00 PM to 05:45 PM - Peak 1 of 1																	
Peak Hour for Entire Intersection Begins at 03:30 PM																	
03:30 PM	0	0	0	0	0	0	0	0	0	0	0	0	**115**	**319**	0	**434**	**434**
03:45 PM	0	0	0	0	0	0	0	0	0	0	0	0	94	271	0	365	365
04:00 PM	0	0	0	0	0	0	0	0	0	0	0	0	84	281	0	365	365
04:15 PM	0	0	0	0	0	0	0	0	0	0	0	0	102	287	0	389	389
Total Volume	0	0	0	0	0	0	0	0	0	0	0	0	395	1158	0	1553	1553
% App. Total	0	0	0		0	0	0		0	0	0		25.4	74.6	0		
PHF	.000	.000	.000	.000	.000	.000	.000	.000	.000	.000	.000	.000	.859	.908	.000	.895	.895

Wilson Okamoto Corporation

1907 S. Beretania Street, Suite 400
Honolulu, HI 96826

Counter:D4-3889, D4-5677
Counted By: SF, RJ
Weather: Clear

File Name : KuhSea PM
Site Code : 00000001
Start Date : 8/31/2011
Page No : 1

Groups Printed- Unshifted

	Seaside Avenue Southbound					Kuhio Avenue Westbound					Seaside Avenue Northbound					Kuhio Avenue Eastbound					
Start Time	Right	Thru	Left	Peds	App. Total	Right	Thru	Left	Peds	App. Total	Right	Thru	Left	Peds	App. Total	Right	Thru	Left	Peds	App. Total	Int. Total
03:00 PM	0	0	0	76	76	11	89	0	69	169	16	56	10	125	207	0	160	14	63	237	689
03:15 PM	0	0	0	80	80	13	72	0	56	141	26	60	8	153	247	0	184	11	65	260	728
03:30 PM	0	0	0	73	73	14	81	0	71	166	27	45	12	119	203	0	142	22	47	211	653
03:45 PM	0	0	0	98	98	22	85	0	70	177	15	52	9	130	206	0	141	25	69	235	716
Total	0	0	0	327	327	60	327	0	266	653	84	213	39	527	863	0	627	72	244	943	2786
04:00 PM	0	0	0	97	97	8	96	0	87	191	14	65	14	136	229	0	166	30	57	253	770
04:15 PM	0	0	0	111	111	19	73	0	79	171	24	66	9	161	260	0	156	16	71	243	785
04:30 PM	0	0	0	82	82	13	99	0	88	200	26	63	9	122	220	0	125	27	47	199	701
04:45 PM	0	0	0	135	135	10	81	0	85	176	17	52	13	98	180	0	138	15	76	229	720
Total	0	0	0	425	425	50	349	0	339	738	81	246	45	517	889	0	585	88	251	924	2976
05:00 PM	0	0	0	102	102	14	75	0	79	168	34	73	10	157	274	0	146	22	60	228	772
05:15 PM	0	0	0	86	86	11	96	0	89	196	29	72	7	134	242	0	166	17	42	225	749
05:30 PM	0	0	0	123	123	8	84	0	74	166	29	60	9	179	277	0	130	13	71	214	780
05:45 PM	0	0	0	137	137	13	90	0	93	196	21	57	8	156	242	0	139	14	57	210	785
Total	0	0	0	448	448	46	345	0	335	726	113	262	34	626	1035	0	581	66	230	877	3086
Grand Total	0	0	0	1200	1200	156	1021	0	940	2117	278	721	118	1670	2787	0	1793	226	725	2744	8848
Apprch %	0	0	0	100		7.4	48.2	0	44.4		10	25.9	4.2	59.9		0	65.3	8.2	26.4		
Total %	0	0	0	13.6	13.6	1.8	11.5	0	10.6	23.9	3.1	8.1	1.3	18.9	31.5	0	20.3	2.6	8.2	31	

	Seaside Avenue Southbound				Kuhio Avenue Westbound				Seaside Avenue Northbound				Kuhio Avenue Eastbound				
Start Time	Right	Thru	Left	App. Total	Right	Thru	Left	App. Total	Right	Thru	Left	App. Total	Right	Thru	Left	App. Total	Int. Total
Peak Hour Analysis From 03:00 PM to 05:45 PM - Peak 1 of 1																	
Peak Hour for Entire Intersection Begins at 03:45 PM																	
03:45 PM	0	0	0	0	**22**	85	0	107	15	52	9	76	0	141	25	166	349
04:00 PM	0	0	0	0	8	96	0	104	14	65	**14**	93	0	**166**	**30**	**196**	**393**
04:15 PM	0	0	0	0	19	73	0	92	24	**66**	9	**99**	0	156	16	172	363
04:30 PM	0	0	0	0	13	**99**	0	**112**	**26**	63	9	98	0	125	27	152	362
Total Volume	0	0	0	0	62	353	0	415	79	246	41	366	0	588	98	686	1467
% App. Total	0	0	0		14.9	85.1	0		21.6	67.2	11.2		0	85.7	14.3		
PHF	.000	.000	.000	.000	.705	.891	.000	.926	.760	.932	.732	.924	.000	.886	.817	.875	.933

Wilson Okamoto Corporation

1907 S. Beretania Street, Suite 400
Honolulu, HI 96826

Counter:D4-5672, D4-5676
Counted By:JY, RF
Weather: Clear

File Name : KuhNoh PM
Site Code : 00000000
Start Date : 8/31/2011
Page No : 1

Groups Printed- Unshifted

	Nohonani St. Southbound					Kuhio Avenue Westbound					Duke's Lane Northbound					Kuhio Avenue Eastbound					
Start Time	Right	Thru	Left	Peds	App. Total	Right	Thru	Left	Peds	App. Total	Right	Thru	Left	Peds	App. Total	Right	Thru	Left	Peds	App. Total	Int. Total
03:00 PM	10	0	17	76	103	5	99	0	66	170	2	8	1	242	253	0	172	0	68	240	766
03:15 PM	9	0	18	91	118	5	78	0	57	140	6	6	1	155	168	0	195	2	76	273	699
03:30 PM	9	0	22	98	129	5	92	0	70	167	8	9	1	206	224	0	169	0	75	244	764
03:45 PM	17	0	16	100	133	7	83	0	71	161	3	5	7	221	236	0	149	0	70	219	749
Total	45	0	73	365	483	22	352	0	264	638	19	28	10	824	881	0	685	2	289	976	2978
04:00 PM	13	0	18	94	125	7	94	0	58	159	4	15	3	196	218	0	172	1	65	238	740
04:15 PM	18	0	22	101	141	7	72	0	78	157	4	2	8	242	256	0	175	0	80	255	809
04:30 PM	26	0	12	87	125	6	89	0	62	157	2	7	5	182	196	0	152	0	60	212	690
04:45 PM	16	0	14	148	178	3	70	0	93	166	5	4	2	190	201	0	151	0	65	216	761
Total	73	0	66	430	569	23	325	0	291	639	15	28	18	810	871	0	650	1	270	921	3000
05:00 PM	12	0	17	121	150	10	73	0	67	150	6	4	3	243	256	0	182	0	90	272	828
05:15 PM	13	0	23	111	147	7	91	0	85	183	3	7	3	266	279	0	201	0	104	305	914
05:30 PM	9	0	16	194	219	4	77	0	62	143	7	5	5	223	240	0	159	0	89	248	850
05:45 PM	8	0	20	139	167	9	86	0	61	156	5	2	4	228	239	0	152	0	87	239	801
Total	42	0	76	565	683	30	327	0	275	632	21	18	15	960	1014	0	694	0	370	1064	3393
Grand Total	160	0	215	1360	1735	75	1004	0	830	1909	55	74	43	2594	2766	0	2029	3	929	2961	9371
Apprch %	9.2	0	12.4	78.4		3.9	52.6	0	43.5		2	2.7	1.6	93.8		0	68.5	0.1	31.4		
Total %	1.7	0	2.3	14.5	18.5	0.8	10.7	0	8.9	20.4	0.6	0.8	0.5	27.7	29.5	0	21.7	0	9.9	31.6	

	Nohonani St. Southbound				Kuhio Avenue Westbound				Duke's Lane Northbound				Kuhio Avenue Eastbound				
Start Time	Right	Thru	Left	App. Total	Right	Thru	Left	App. Total	Right	Thru	Left	App. Total	Right	Thru	Left	App. Total	Int. Total
Peak Hour Analysis From 03:00 PM to 05:45 PM - Peak 1 of 1																	
Peak Hour for Entire Intersection Begins at 03:15 PM																	
03:15 PM	9	0	18	27	5	78	0	83	6	6	1	13	0	**195**	**2**	**197**	320
03:30 PM	9	0	**22**	31	5	92	0	97	**8**	9	1	18	0	169	0	169	315
03:45 PM	**17**	0	16	**33**	**7**	83	0	90	3	5	**7**	15	0	149	0	149	287
04:00 PM	13	0	18	31	7	**94**	0	**101**	4	**15**	3	**22**	0	172	1	173	**327**
Total Volume	48	0	74	122	24	347	0	371	21	35	12	68	0	685	3	688	1249
% App. Total	39.3	0	60.7		6.5	93.5	0		30.9	51.5	17.6		0	99.6	0.4		
PHF	.706	.000	.841	.924	.857	.923	.000	.918	.656	.583	.429	.773	.000	.878	.375	.873	.955

Wilson Okamoto Corporation

1907 S. Beretania Street, Suite 400
Honolulu, HI 96826

Counter: T-1839, D4-5674
Counted By: JI, BJ
Weather: Clear

File Name : KuhNah PM
Site Code : 00000003
Start Date : 8/31/2011
Page No : 1

Groups Printed- Unshifted

	Southbound	Kuhio Avenue Westbound					Northbound	Kuhio Avenue Eastbound					
Start Time	App. Total	Right	Thru	Left	Peds	App. Total	App. Total	Right	Thru	Left	Peds	App. Total	Int. Total
03:00 PM	0	13	100	0	88	201	0	0	162	28	62	252	453
03:15 PM	0	16	77	0	70	163	0	0	172	33	53	258	421
03:30 PM	0	21	86	0	54	161	0	0	186	23	43	252	413
03:45 PM	0	22	91	0	61	174	0	0	132	30	57	219	393
Total	0	72	354	0	273	699	0	0	652	114	215	981	1680
04:00 PM	0	18	94	0	73	185	0	0	150	34	44	228	413
04:15 PM	0	19	84	0	84	187	0	0	160	36	45	241	428
04:30 PM	0	10	93	0	48	151	0	0	121	27	59	207	358
04:45 PM	0	16	81	0	83	180	0	0	150	33	68	251	431
Total	0	63	352	0	288	703	0	0	581	130	216	927	1630
05:00 PM	0	8	82	0	76	166	0	0	165	36	47	248	414
05:15 PM	0	7	88	0	85	180	0	0	176	36	52	264	444
05:30 PM	0	17	79	0	83	179	0	0	163	26	64	253	432
05:45 PM	0	20	105	0	92	217	0	0	136	40	56	232	449
Total	0	52	354	0	336	742	0	0	640	138	219	997	1739
Grand Total	0	187	1060	0	897	2144	0	0	1873	382	650	2905	5049
Apprch %		8.7	49.4	0	41.8			0	64.5	13.1	22.4		
Total %	0	3.7	21	0	17.8	42.5	0	0	37.1	7.6	12.9	57.5	

	Southbound	Kuhio Avenue Westbound				Northbound	Kuhio Avenue Eastbound				
Start Time	App. Total	Right	Thru	Left	App. Total	App. Total	Right	Thru	Left	App. Total	Int. Total
Peak Hour Analysis From 03:00 PM to 05:45 PM - Peak 1 of 1											
Peak Hour for Entire Intersection Begins at 03:00 PM											
03:00 PM	0	13	**100**	0	**113**	0	0	162	28	190	303
03:15 PM	0	16	77	0	93	0	0	172	**33**	205	298
03:30 PM	0	21	86	0	107	0	0	**186**	23	**209**	**316**
03:45 PM	0	**22**	91	0	113	0	0	132	30	162	275
Total Volume	0	72	354	0	426	0	0	652	114	766	1192
% App. Total		16.9	83.1	0			0	85.1	14.9		
PHF	.000	.818	.885	.000	.942	.000	.000	.876	.864	.916	.943

Wilson Okamoto Corporation

1907 S. Beretania Street, Suite 400
Honolulu, HI 96826

Counter: D4-5675, D4-3888
Counted By: PA, CY
Weather: Clear

File Name : KuhWal PM
Site Code : 00000004
Start Date : 8/31/2011
Page No : 1

Groups Printed- Unshifted

	Walina Street Southbound					Kuhio Avenue Westbound					Walina Street Northbound					Kuhio Avenue Eastbound					
Start Time	Right	Thru	Left	Peds	App. Total	Right	Thru	Left	Peds	App. Total	Right	Thru	Left	Peds	App. Total	Right	Thru	Left	Peds	App. Total	Int. Total
03:00 PM	16	3	7	152	178	0	100	4	47	151	0	0	0	145	145	8	148	0	42	198	672
03:15 PM	17	2	9	144	172	0	78	1	44	123	0	0	0	112	112	6	173	0	34	213	620
03:30 PM	17	4	8	112	141	0	91	1	58	150	0	0	0	123	123	11	181	0	39	231	645
03:45 PM	16	3	5	121	145	0	89	0	56	145	0	0	0	123	123	9	127	0	38	174	587
Total	66	12	29	529	636	0	358	6	205	569	0	0	0	503	503	34	629	0	153	816	2524
04:00 PM	16	3	10	64	93	0	85	0	79	164	0	0	0	86	86	11	155	0	49	215	558
04:15 PM	19	3	12	123	157	0	87	0	73	160	0	0	0	151	151	2	169	0	57	228	696
04:30 PM	16	4	11	138	169	0	69	0	52	121	0	0	0	148	148	3	131	0	64	198	636
04:45 PM	9	3	6	183	201	0	71	6	28	105	0	0	0	157	157	4	142	0	60	206	669
Total	60	13	39	508	620	0	312	6	232	550	0	0	0	542	542	20	597	0	230	847	2559
05:00 PM	11	2	12	143	168	0	67	0	59	126	0	0	0	185	185	3	152	0	49	204	683
05:15 PM	14	2	12	141	169	0	78	0	64	142	0	0	0	146	146	5	185	0	49	239	696
05:30 PM	15	1	14	211	241	0	72	3	61	136	0	0	0	140	140	4	161	0	49	214	731
05:45 PM	12	3	12	152	179	0	82	1	60	143	0	0	0	92	92	3	127	0	40	170	584
Total	52	8	50	647	757	0	299	4	244	547	0	0	0	563	563	15	625	0	187	827	2694
Grand Total	178	33	118	1684	2013	0	969	16	681	1666	0	0	0	1608	1608	69	1851	0	570	2490	7777
Apprch %	8.8	1.6	5.9	83.7		0	58.2	1	40.9		0	0	0	100		2.8	74.3	0	22.9		
Total %	2.3	0.4	1.5	21.7	25.9	0	12.5	0.2	8.8	21.4	0	0	0	20.7	20.7	0.9	23.8	0	7.3	32	

	Walina Street Southbound				Kuhio Avenue Westbound				Walina Street Northbound				Kuhio Avenue Eastbound				
Start Time	Right	Thru	Left	App. Total	Right	Thru	Left	App. Total	Right	Thru	Left	App. Total	Right	Thru	Left	App. Total	Int. Total
Peak Hour Analysis From 03:00 PM to 05:45 PM - Peak 1 of 1																	
Peak Hour for Entire Intersection Begins at 03:00 PM																	
03:00 PM	16	3	7	26	0	**100**	**4**	**104**	0	0	0	0	8	148	0	156	286
03:15 PM	**17**	2	**9**	28	0	78	1	79	0	0	0	0	6	173	0	179	286
03:30 PM	17	**4**	8	**29**	0	91	1	92	0	0	0	0	**11**	**181**	0	**192**	**313**
03:45 PM	16	3	5	24	0	89	0	89	0	0	0	0	9	127	0	136	249
Total Volume	66	12	29	107	0	358	6	364	0	0	0	0	34	629	0	663	1134
% App. Total	61.7	11.2	27.1		0	98.4	1.6		0	0	0		5.1	94.9	0		
PHF	.971	.750	.806	.922	.000	.895	.375	.875	.000	.000	.000	.000	.773	.869	.000	.863	.906

Wilson Okamoto Corporation

1907 S. Beretania Street, Suite 400
Honolulu, HI 96826

Counter: D4-5673, D4-5671
Counted By: DY, GC
Weather: Clear

File Name : KuhKan PM
Site Code : 00000005
Start Date : 8/31/2011
Page No : 1

Groups Printed- Unshifted

	Kanekapolei St. Southbound					Kuhio Avenue Westbound					Kanekapolei St. Northbound					Kuhio Avenue Eastbound					
Start Time	Right	Thru	Left	Peds	App. Total	Right	Thru	Left	Peds	App. Total	Right	Thru	Left	Peds	App. Total	Right	Thru	Left	Peds	App. Total	Int. Total
03:00 PM	9	16	15	85	125	1	72	3	30	106	0	56	19	56	131	23	109	22	68	222	584
03:15 PM	5	22	17	90	134	0	55	6	45	106	0	54	17	71	142	21	139	21	101	282	664
03:30 PM	4	14	19	53	90	8	75	7	39	129	1	77	16	89	183	21	123	34	46	224	626
03:45 PM	6	22	16	56	100	4	67	6	45	122	0	72	24	93	189	13	107	24	53	197	608
Total	24	74	67	284	449	13	269	22	159	463	1	259	76	309	645	78	478	101	268	925	2482
04:00 PM	8	21	15	73	117	1	62	3	43	109	1	64	19	98	182	11	156	30	98	295	703
04:15 PM	6	22	18	69	115	4	74	5	52	135	0	52	23	109	184	16	183	33	102	334	768
04:30 PM	7	17	22	40	86	4	62	5	35	106	0	34	20	110	164	19	143	14	79	255	611
04:45 PM	5	12	17	36	70	2	61	6	30	99	0	35	22	98	155	9	166	26	84	285	609
Total	26	72	72	218	388	11	259	19	160	449	1	185	84	415	685	55	648	103	363	1169	2691
05:00 PM	4	17	20	68	109	5	57	3	26	91	1	66	19	86	172	9	165	36	103	313	685
05:15 PM	9	13	24	84	130	2	60	4	29	95	0	42	20	81	143	15	213	34	142	404	772
05:30 PM	1	13	20	115	149	4	58	3	25	90	3	34	20	92	149	17	154	22	77	270	658
05:45 PM	12	9	33	103	157	3	59	6	20	88	1	40	19	75	135	8	166	20	102	296	676
Total	26	52	97	370	545	14	234	16	100	364	5	182	78	334	599	49	698	112	424	1283	2791
Grand Total	76	198	236	872	1382	38	762	57	419	1276	7	626	238	1058	1929	182	1824	316	1055	3377	7964
Apprch %	5.5	14.3	17.1	63.1		3	59.7	4.5	32.8		0.4	32.5	12.3	54.8		5.4	54	9.4	31.2		
Total %	1	2.5	3	10.9	17.4	0.5	9.6	0.7	5.3	16	0.1	7.9	3	13.3	24.2	2.3	22.9	4	13.2	42.4	

	Kanekapolei St. Southbound				Kuhio Avenue Westbound				Kanekapolei St. Northbound				Kuhio Avenue Eastbound				
Start Time	Right	Thru	Left	App. Total	Right	Thru	Left	App. Total	Right	Thru	Left	App. Total	Right	Thru	Left	App. Total	Int. Total
Peak Hour Analysis From 03:00 PM to 05:45 PM - Peak 1 of 1																	
Peak Hour for Entire Intersection Begins at 03:30 PM																	
03:30 PM	4	14	**19**	37	**8**	**75**	**7**	**90**	**1**	**77**	16	94	**21**	123	**34**	178	399
03:45 PM	6	**22**	16	44	4	67	6	77	0	72	**24**	**96**	13	107	24	144	361
04:00 PM	**8**	21	15	44	1	62	3	66	1	64	19	84	11	156	30	197	391
04:15 PM	6	22	18	**46**	4	74	5	83	0	52	23	75	16	**183**	33	**232**	**436**
Total Volume	24	79	68	171	17	278	21	316	2	265	82	349	61	569	121	751	1587
% App. Total	14	46.2	39.8		5.4	88	6.6		0.6	75.9	23.5		8.1	75.8	16.1		
PHF	.750	.898	.895	.929	.531	.927	.750	.878	.500	.860	.854	.909	.726	.777	.890	.809	.910

Wilson Okamoto Corporation

1907 S. Beretania Street, Suite 400
Honolulu, HI 96826

Counter: TU-0651, TU-0649
Counted By: JI, RJ
Weather: Clear

File Name : AlaSea PM
Site Code : 00000001
Start Date : 9/1/2011
Page No : 1

Groups Printed- Unshifted

	Southbound	Ala Wai Boulevard Westbound					Seaside Avenue Northbound					Eastbound	
Start Time	App. Total	Right	Thru	Left	Peds	App. Total	Right	Thru	Left	Peds	App. Total	App. Total	Int. Total
03:00 PM	0	0	410	35	14	459	0	0	75	12	87	0	546
03:15 PM	0	0	379	59	18	456	0	0	83	7	90	0	546
03:30 PM	0	0	404	54	11	469	0	0	63	3	66	0	535
03:45 PM	0	0	396	55	21	472	0	0	70	9	79	0	551
Total	0	0	1589	203	64	1856	0	0	291	31	322	0	2178
04:00 PM	0	0	450	48	8	506	0	0	102	11	113	0	619
04:15 PM	0	0	389	52	16	457	0	0	114	15	129	0	586
04:30 PM	0	1	440	47	9	497	0	0	101	25	126	0	623
04:45 PM	0	0	400	54	17	471	0	0	82	26	108	0	579
Total	0	1	1679	201	50	1931	0	0	399	77	476	0	2407
05:00 PM	0	0	366	39	10	415	0	0	98	15	113	0	528
05:15 PM	0	0	418	44	28	490	0	0	98	19	117	0	607
05:30 PM	0	0	345	42	19	406	0	0	94	33	127	0	533
05:45 PM	0	0	362	39	13	414	0	0	66	7	73	0	487
Total	0	0	1491	164	70	1725	0	0	356	74	430	0	2155
Grand Total	0	1	4759	568	184	5512	0	0	1046	182	1228	0	6740
Apprch %		0	86.3	10.3	3.3		0	0	85.2	14.8			
Total %	0	0	70.6	8.4	2.7	81.8	0	0	15.5	2.7	18.2	0	

	Southbound	Ala Wai Boulevard Westbound				Seaside Avenue Northbound				Eastbound	
Start Time	App. Total	Right	Thru	Left	App. Total	Right	Thru	Left	App. Total	App. Total	Int. Total
Peak Hour Analysis From 03:00 PM to 05:45 PM - Peak 1 of 1											
Peak Hour for Entire Intersection Begins at 04:00 PM											
04:00 PM	0	0	**450**	48	**498**	0	0	102	102	0	**600**
04:15 PM	0	0	389	52	441	0	0	**114**	**114**	0	555
04:30 PM	0	**1**	440	47	488	0	0	101	101	0	589
04:45 PM	0	0	400	**54**	454	0	0	82	82	0	536
Total Volume	0	1	1679	201	1881	0	0	399	399	0	2280
% App. Total		0.1	89.3	10.7		0	0	100			
PHF	.000	.250	.933	.931	.944	.000	.000	.875	.875	.000	.950

Wilson Okamoto Corporation

1907 S. Beretania Street, Suite 400
Honolulu, HI 96826

Counter: D4-3890
Counted By: GC
Weather: Clear

File Name : AlaNoh PM
Site Code : 00000002
Start Date : 9/1/2011
Page No : 1

Groups Printed- Unshifted

	Southbound	Ala Wai Boulevard Westbound					Nohonani Street Northbound					Eastbound	
Start Time	App. Total	Right	Thru	Left	Peds	App. Total	Right	Thru	Left	Peds	App. Total	App. Total	Int. Total
03:00 PM	0	0	428	39	0	467	0	0	17	16	33	0	500
03:15 PM	0	0	442	32	0	474	0	0	14	12	26	0	500
03:30 PM	0	0	427	35	0	462	0	0	19	8	27	0	489
03:45 PM	0	0	441	30	0	471	0	0	9	15	24	0	495
Total	0	0	1738	136	0	1874	0	0	59	51	110	0	1984
04:00 PM	0	0	488	40	0	528	0	0	16	7	23	0	551
04:15 PM	0	0	443	24	0	467	0	0	26	27	53	0	520
04:30 PM	0	0	464	42	0	506	0	0	14	22	36	0	542
04:45 PM	0	0	449	51	0	500	0	0	12	21	33	0	533
Total	0	0	1844	157	0	2001	0	0	68	77	145	0	2146
05:00 PM	0	0	394	40	0	434	0	0	21	18	39	0	473
05:15 PM	0	0	445	35	0	480	0	0	17	24	41	0	521
05:30 PM	0	0	376	39	0	415	0	0	12	22	34	0	449
05:45 PM	0	0	390	34	0	424	0	0	13	16	29	0	453
Total	0	0	1605	148	0	1753	0	0	63	80	143	0	1896
Grand Total	0	0	5187	441	0	5628	0	0	190	208	398	0	6026
Apprch %		0	92.2	7.8	0		0	0	47.7	52.3			
Total %	0	0	86.1	7.3	0	93.4	0	0	3.2	3.5	6.6	0	

	Southbound	Ala Wai Boulevard Westbound				Nohonani Street Northbound				Eastbound	
Start Time	App. Total	Right	Thru	Left	App. Total	Right	Thru	Left	App. Total	App. Total	Int. Total
Peak Hour Analysis From 03:00 PM to 05:45 PM - Peak 1 of 1											
Peak Hour for Entire Intersection Begins at 04:00 PM											
04:00 PM	0	0	**488**	40	**528**	0	0	16	16	0	**544**
04:15 PM	0	0	443	24	467	0	0	**26**	**26**	0	493
04:30 PM	0	0	464	42	506	0	0	14	14	0	520
04:45 PM	0	0	449	**51**	500	0	0	12	12	0	512
Total Volume	0	0	1844	157	2001	0	0	68	68	0	2069
% App. Total		0	92.2	7.8		0	0	100			
PHF	.000	.000	.945	.770	.947	.000	.000	.654	.654	.000	.951

Wilson Okamoto Corporation

1907 S. Beretania Street, Suite 400
Honolulu, HI 96826

Counter: TU-0654
Counted By: CY
Weather: Clear

File Name : AlaNah PM
Site Code : 00000003
Start Date : 9/1/2011
Page No : 1

Groups Printed- Unshifted

	Southbound	Ala Wai Boulevard Westbound					Nahua Street Northbound					Eastbound	
Start Time	App. Total	Right	Thru	Left	Peds	App. Total	Right	Thru	Left	Peds	App. Total	App. Total	Int. Total
03:00 PM	0	0	431	0	0	431	0	0	50	19	69	0	500
03:15 PM	0	0	425	0	0	425	0	0	50	15	65	0	490
03:30 PM	0	0	441	0	0	441	0	0	48	5	53	0	494
03:45 PM	0	0	449	0	0	449	0	0	43	25	68	0	517
Total	0	0	1746	0	0	1746	0	0	191	64	255	0	2001
04:00 PM	0	0	475	0	0	475	0	0	69	9	78	0	553
04:15 PM	0	0	431	0	0	431	0	0	43	17	60	0	491
04:30 PM	0	0	440	0	0	440	0	0	45	25	70	0	510
04:45 PM	0	0	429	0	0	429	0	0	51	17	68	0	497
Total	0	0	1775	0	0	1775	0	0	208	68	276	0	2051
05:00 PM	0	0	384	0	0	384	0	0	58	15	73	0	457
05:15 PM	0	0	424	0	0	424	0	0	54	22	76	0	500
05:30 PM	0	0	378	0	0	378	0	0	45	26	71	0	449
05:45 PM	0	0	385	0	0	385	0	0	45	22	67	0	452
Total	0	0	1571	0	0	1571	0	0	202	85	287	0	1858
Grand Total	0	0	5092	0	0	5092	0	0	601	217	818	0	5910
Apprch %		0	100	0	0		0	0	73.5	26.5			
Total %	0	0	86.2	0	0	86.2	0	0	10.2	3.7	13.8	0	

	Southbound	Ala Wai Boulevard Westbound				Nahua Street Northbound				Eastbound	
Start Time	App. Total	Right	Thru	Left	App. Total	Right	Thru	Left	App. Total	App. Total	Int. Total
Peak Hour Analysis From 03:00 PM to 05:45 PM - Peak 1 of 1											
Peak Hour for Entire Intersection Begins at 03:15 PM											
03:15 PM	0	0	425	0	425	0	0	50	50	0	475
03:30 PM	0	0	441	0	441	0	0	48	48	0	489
03:45 PM	0	0	449	0	449	0	0	43	43	0	492
04:00 PM	0	0	**475**	0	**475**	0	0	**69**	**69**	0	**544**
Total Volume	0	0	1790	0	1790	0	0	210	210	0	2000
% App. Total		0	100	0		0	0	100			
PHF	.000	.000	.942	.000	.942	.000	.000	.761	.761	.000	.919

Wilson Okamoto Corporation

1907 S. Beretania Street, Suite 400
Honolulu, HI 96826

Counter: TU-0652
Counted By: RF
Weather: Clear

File Name : AlaWal PM
Site Code : 00000004
Start Date : 9/1/2011
Page No : 1

Groups Printed- Unshifted

	Southbound	Ala Wai Boulevard Westbound					Walina Street Northbound					Eastbound	
Start Time	App. Total	Right	Thru	Left	Peds	App. Total	Right	Thru	Left	Peds	App. Total	App. Total	Int. Total
03:00 PM	0	0	445	25	0	470	0	0	0	9	9	0	479
03:15 PM	0	0	428	33	0	461	0	0	0	15	15	0	476
03:30 PM	0	0	428	30	0	458	0	0	0	13	13	0	471
03:45 PM	0	0	438	28	0	466	0	0	0	14	14	0	480
Total	0	0	1739	116	0	1855	0	0	0	51	51	0	1906
04:00 PM	0	0	482	45	0	527	0	0	0	15	15	0	542
04:15 PM	0	0	430	28	0	458	0	0	0	17	17	0	475
04:30 PM	0	0	464	28	0	492	0	0	0	17	17	0	509
04:45 PM	0	0	445	37	0	482	0	0	0	25	25	0	507
Total	0	0	1821	138	0	1959	0	0	0	74	74	0	2033
05:00 PM	0	0	381	36	0	417	0	0	0	17	17	0	434
05:15 PM	0	0	425	34	0	459	0	0	0	20	20	0	479
05:30 PM	0	0	370	41	0	411	0	0	0	22	22	0	433
05:45 PM	0	0	382	27	0	409	0	0	0	20	20	0	429
Total	0	0	1558	138	0	1696	0	0	0	79	79	0	1775
Grand Total	0	0	5118	392	0	5510	0	0	0	204	204	0	5714
Apprch %		0	92.9	7.1	0		0	0	0	100			
Total %	0	0	89.6	6.9	0	96.4	0	0	0	3.6	3.6	0	

	Southbound	Ala Wai Boulevard Westbound				Walina Street Northbound				Eastbound	
Start Time	App. Total	Right	Thru	Left	App. Total	Right	Thru	Left	App. Total	App. Total	Int. Total
Peak Hour Analysis From 03:00 PM to 05:45 PM - Peak 1 of 1											
Peak Hour for Entire Intersection Begins at 04:00 PM											
04:00 PM	0	0	**482**	**45**	**527**	0	0	0	0	0	**527**
04:15 PM	0	0	430	28	458	0	0	0	0	0	458
04:30 PM	0	0	464	28	492	0	0	0	0	0	492
04:45 PM	0	0	445	37	482	0	0	0	0	0	482
Total Volume	0	0	1821	138	1959	0	0	0	0	0	1959
% App. Total		0	93	7		0	0	0			
PHF	.000	.000	.945	.767	.929	.000	.000	.000	.000	.000	.929

Wilson Okamoto Corporation

1907 S. Beretania Street, Suite 400
Honolulu, HI 96826

Counter: TU-0650, TU-0653
Counted By: PA, DY
Weather: Clear

File Name : AlaKan PM
Site Code : 00000005
Start Date : 9/1/2011
Page No : 1

Groups Printed- Unshifted

	Southbound	Ala Wai Boulevard Westbound					Kanekapolei St. Northbound					Eastbound	
Start Time	App. Total	Right	Thru	Left	Peds	App. Total	Right	Thru	Left	Peds	App. Total	App. Total	Int. Total
03:00 PM	0	0	374	39	12	425	0	0	98	16	114	0	539
03:15 PM	0	0	389	33	6	428	0	0	85	15	100	0	528
03:30 PM	0	0	386	30	10	426	0	0	95	18	113	0	539
03:45 PM	0	0	412	57	7	476	0	0	68	17	85	0	561
Total	0	0	1561	159	35	1755	0	0	346	66	412	0	2167
04:00 PM	0	0	437	36	10	483	0	0	98	16	114	0	597
04:15 PM	0	0	387	44	9	440	0	0	102	17	119	0	559
04:30 PM	0	0	430	41	4	475	0	0	70	15	85	0	560
04:45 PM	0	0	406	47	13	466	0	0	76	25	101	0	567
Total	0	0	1660	168	36	1864	0	0	346	73	419	0	2283
05:00 PM	0	0	337	49	10	396	0	0	88	21	109	0	505
05:15 PM	0	0	392	63	20	475	0	0	87	28	115	0	590
05:30 PM	0	0	340	74	14	428	0	0	97	22	119	0	547
05:45 PM	0	0	338	50	20	408	0	0	82	26	108	0	516
Total	0	0	1407	236	64	1707	0	0	354	97	451	0	2158
Grand Total	0	0	4628	563	135	5326	0	0	1046	236	1282	0	6608
Apprch %		0	86.9	10.6	2.5		0	0	81.6	18.4			
Total %	0	0	70	8.5	2	80.6	0	0	15.8	3.6	19.4	0	

	Southbound	Ala Wai Boulevard Westbound				Kanekapolei St. Northbound				Eastbound	
Start Time	App. Total	Right	Thru	Left	App. Total	Right	Thru	Left	App. Total	App. Total	Int. Total
Peak Hour Analysis From 03:00 PM to 05:45 PM - Peak 1 of 1											
Peak Hour for Entire Intersection Begins at 03:45 PM											
03:45 PM	0	0	412	**57**	469	0	0	68	68	0	537
04:00 PM	0	0	**437**	36	**473**	0	0	98	98	0	**571**
04:15 PM	0	0	387	44	431	0	0	**102**	**102**	0	533
04:30 PM	0	0	430	41	471	0	0	70	70	0	541
Total Volume	0	0	1666	178	1844	0	0	338	338	0	2182
% App. Total		0	90.3	9.7		0	0	100			
PHF	.000	.000	.953	.781	.975	.000	.000	.828	.828	.000	.955

APPENDIX B

LEVEL OF SERVICE DEFINITIONS

LEVEL OF SERVICE DEFINITIONS

LEVEL-OF-SERVICE CRITERIA FOR SIGNALIZED INTERSECTIONS

Level of Service (LOS) for signalized intersections is defined in terms of delay, which is a measure of driver discomfort, frustration, fuel consumption, and increased travel time. Specifically, level-of-service (LOS) criteria are stated in terms of the average control delay per vehicle, typically a 15-min analysis period. The criteria are given in the following table.

Table 1: Level-of-Service Criteria for Signalized Intersections

Level of Service	Control Delay per Vehicle (sec/veh)
A	≤10.0
B	>10.0 and ≤20.0
C	>20.0 and ≤35.0
D	>35.0 and ≤55.0
E	>55.0 and ≤80.0
F	>80.0

Delay is a complex measure and depends on a number of variables, including the quality of progression, the cycle length, the green ratio, and the v/c ratio for the lane group.

Level of Service A describes operations with low control delay, up to 10 sec per vehicle. This level of service occurs when progression is extremely favorable and most vehicles arrive during the green phase. Many vehicles do not stop at all. Short cycle lengths may tend to contribute to low delay values.

Level of Service B describes operations with control delay greater than 10 and up to 20 sec per vehicle. This level generally occurs with good progression, short cycle lengths, or both. More vehicles stop than with LOS A, causing higher levels of delay.

Level of Service C describes operations with control delay greater than 20 and up to 35 sec per vehicle. These higher delays may result from only fair progression, longer cycle lengths, or both. Individual cycle failures may begin to appear at this level. Cycle failure occurs when a given green phase does not serve queued vehicles and overflows occur. The number of vehicles stopping is significant at this level, though many still pass through the intersection without stopping.

Level of Service D describes operations with control delay greater than 35 and up to 55 sec per vehicle. At level of service D, the influence of congestion becomes more noticeable. Longer delays may result from some combination of unfavorable progression, long cycle lengths, or high v/c ratios. Many vehicles stop, and the proportion of vehicles not stopping declines. Individual cycle failures are noticeable.

"Highway Capacity Manual," Transportation Research Board, 2000.

Level of Service E describes operation with control delay greater than 55 and up to 80 sec per vehicle. These high delay values generally indicate poor progression, long cycle lengths, and high v/c ratios. Individual cycle failures are frequent.

Level of Service F describes operations with control delay in excess of 80 sec per vehicle. This level, considered to be unacceptable to most drivers, often occurs with oversaturation, that is, when arrival flow rates exceed the capacity lane groups. It may also occur at high v/c ratios with many individual cycle failures. Poor progression and long cycle lengths may also contribute significantly to high delay levels.

"Highway Capacity Manual," Transportation Research Board, 2000.

APPENDIX C

CAPACITY ANALYSIS CALCULATIONS
EXISTING PEAK HOUR TRAFFIC ANALYSIS

Movement	SEL	SET	NWT	NWR	SWL	SWR
Lane Configurations						
Volume (vph)	209	1407	0	0	0	0
Ideal Flow (vphpl)	1900	1900	1900	1900	1900	1900
Total Lost time (s)	5.0	5.0				
Lane Util. Factor	0.81	0.81				
Frt	1.00	1.00				
Flt Protected	0.95	1.00				
Satd. Flow (prot)	1433	6031				
Flt Permitted	0.95	1.00				
Satd. Flow (perm)	1433	6031				
Peak-hour factor, PHF	0.94	0.94	0.92	0.92	0.92	0.92
Adj. Flow (vph)	222	1497	0	0	0	0
RTOR Reduction (vph)	0	0	0	0	0	0
Lane Group Flow (vph)	200	1519	0	0	0	0
Turn Type	Perm					
Protected Phases		4				
Permitted Phases	4					
Actuated Green, G (s)	55.0	55.0				
Effective Green, g (s)	55.0	55.0				
Actuated g/C Ratio	0.61	0.61				
Clearance Time (s)	5.0	5.0				
Lane Grp Cap (vph)	876	3686				
v/s Ratio Prot						
v/s Ratio Perm	0.14	0.25				
v/c Ratio	0.23	0.41				
Uniform Delay, d1	7.9	9.1				
Progression Factor	1.00	1.00				
Incremental Delay, d2	0.6	0.3				
Delay (s)	8.5	9.4				
Level of Service	A	A				
Approach Delay (s)		9.3	0.0		0.0	
Approach LOS		A	A		A	

Intersection Summary			
HCM Average Control Delay	9.3	HCM Level of Service	A
HCM Volume to Capacity ratio	0.41		
Actuated Cycle Length (s)	90.0	Sum of lost time (s)	35.0
Intersection Capacity Utilization	24.6%	ICU Level of Service	A
Analysis Period (min)	15		

c Critical Lane Group

Movement	SEL	SET	NWT	NWR	SWL	SWR
Lane Configurations						
Volume (vph)	247	1474	0	0	0	0
Ideal Flow (vphpl)	1900	1900	1900	1900	1900	1900
Total Lost time (s)	5.0	5.0				
Lane Util. Factor	0.81	0.81				
Frt	1.00	1.00				
Flt Protected	0.95	1.00				
Satd. Flow (prot)	1433	6030				
Flt Permitted	0.95	1.00				
Satd. Flow (perm)	1433	6030				
Peak-hour factor, PHF	0.94	0.94	0.92	0.92	0.92	0.92
Adj. Flow (vph)	263	1568	0	0	0	0
RTOR Reduction (vph)	0	0	0	0	0	0
Lane Group Flow (vph)	237	1594	0	0	0	0
Turn Type	Perm					
Protected Phases		4				
Permitted Phases	4					
Actuated Green, G (s)	45.0	45.0				
Effective Green, g (s)	45.0	45.0				
Actuated g/C Ratio	0.56	0.56				
Clearance Time (s)	5.0	5.0				
Lane Grp Cap (vph)	806	3392				
v/s Ratio Prot						
v/s Ratio Perm	0.17	0.26				
v/c Ratio	0.29	0.47				
Uniform Delay, d1	9.2	10.4				
Progression Factor	1.00	1.00				
Incremental Delay, d2	0.9	0.5				
Delay (s)	10.1	10.9				
Level of Service	B	B				
Approach Delay (s)		10.8	0.0		0.0	
Approach LOS		B	A		A	

Intersection Summary			
HCM Average Control Delay	10.8	HCM Level of Service	B
HCM Volume to Capacity ratio	0.47		
Actuated Cycle Length (s)	80.0	Sum of lost time (s)	35.0
Intersection Capacity Utilization	25.5%	ICU Level of Service	A
Analysis Period (min)	15		

c Critical Lane Group

Movement	SEL	SET	NWT	NWR	SWL	SWR
Lane Configurations						
Volume (vph)	351	1101	0	0	0	0
Ideal Flow (vphpl)	1900	1900	1900	1900	1900	1900
Total Lost time (s)	5.0	5.0				
Lane Util. Factor	1.00	0.91				
Frt	1.00	1.00				
Flt Protected	0.95	1.00				
Satd. Flow (prot)	1770	5085				
Flt Permitted	0.95	1.00				
Satd. Flow (perm)	1770	5085				
Peak-hour factor, PHF	0.93	0.93	0.92	0.92	0.92	0.92
Adj. Flow (vph)	377	1184	0	0	0	0
RTOR Reduction (vph)	168	0	0	0	0	0
Lane Group Flow (vph)	209	1184	0	0	0	0
Turn Type	Perm					
Protected Phases		6				
Permitted Phases	6					
Actuated Green, G (s)	50.0	50.0				
Effective Green, g (s)	50.0	50.0				
Actuated g/C Ratio	0.56	0.56				
Clearance Time (s)	5.0	5.0				
Lane Grp Cap (vph)	983	2825				
v/s Ratio Prot		c0.23				
v/s Ratio Perm	0.12					
v/c Ratio	0.21	0.42				
Uniform Delay, d1	10.1	11.6				
Progression Factor	1.11	0.96				
Incremental Delay, d2	0.5	0.4				
Delay (s)	11.7	11.6				
Level of Service	B	B				
Approach Delay (s)		11.6	0.0		0.0	
Approach LOS		B	A		A	

Intersection Summary			
HCM Average Control Delay	11.6	HCM Level of Service	B
HCM Volume to Capacity ratio	0.42		
Actuated Cycle Length (s)	90.0	Sum of lost time (s)	40.0
Intersection Capacity Utilization	25.4%	ICU Level of Service	A
Analysis Period (min)	15		

c Critical Lane Group

Movement	SEL	SET	NWT	NWR	SWL	SWR
Lane Configurations						
Volume (vph)	337	1063	0	0	0	0
Ideal Flow (vphpl)	1900	1900	1900	1900	1900	1900
Total Lost time (s)	5.0	5.0				
Lane Util. Factor	1.00	0.91				
Frt	1.00	1.00				
Flt Protected	0.95	1.00				
Satd. Flow (prot)	1770	5085				
Flt Permitted	0.95	1.00				
Satd. Flow (perm)	1770	5085				
Peak-hour factor, PHF	0.96	0.96	0.92	0.92	0.92	0.92
Adj. Flow (vph)	351	1107	0	0	0	0
RTOR Reduction (vph)	176	0	0	0	0	0
Lane Group Flow (vph)	176	1107	0	0	0	0
Turn Type	Perm					
Protected Phases		6				
Permitted Phases	6					
Actuated Green, G (s)	40.0	40.0				
Effective Green, g (s)	40.0	40.0				
Actuated g/C Ratio	0.50	0.50				
Clearance Time (s)	5.0	5.0				
Lane Grp Cap (vph)	885	2543				
v/s Ratio Prot		c0.22				
v/s Ratio Perm	0.10					
v/c Ratio	0.20	0.44				
Uniform Delay, d1	11.1	12.8				
Progression Factor	1.39	0.92				
Incremental Delay, d2	0.5	0.5				
Delay (s)	15.9	12.2				
Level of Service	B	B				
Approach Delay (s)		13.1	0.0		0.0	
Approach LOS		B	A		A	

Intersection Summary			
HCM Average Control Delay	13.1	HCM Level of Service	B
HCM Volume to Capacity ratio	0.44		
Actuated Cycle Length (s)	80.0	Sum of lost time (s)	40.0
Intersection Capacity Utilization	24.7%	ICU Level of Service	A
Analysis Period (min)	15		

c Critical Lane Group

Movement	SEL	SET	SER	NWL	NWT	NWR	NEL	NET	NER	SWL	SWT	SWR
Lane Configurations												
Volume (vph)	88	585	0	0	349	50	45	246	81	0	0	0
Ideal Flow (vphpl)	1900	1900	1900	1900	1900	1900	1900	1900	1900	1900	1900	1900
Total Lost time (s)		5.0			5.0		5.0	5.0	5.0			
Lane Util. Factor		0.95			0.95		1.00	1.00	1.00			
Frpb, ped/bikes		1.00			0.95		1.00	1.00	0.64			
Flpb, ped/bikes		0.98			1.00		0.68	1.00	1.00			
Frt		1.00			0.98		1.00	1.00	0.85			
Flt Protected		0.99			1.00		0.95	1.00	1.00			
Satd. Flow (prot)		3457			3305		1195	1863	1014			
Flt Permitted		0.80			1.00		0.95	1.00	1.00			
Satd. Flow (perm)		2791			3305		1195	1863	1014			
Peak-hour factor, PHF	0.86	0.86	0.86	0.89	0.89	0.89	0.94	0.94	0.94	0.92	0.92	0.92
Adj. Flow (vph)	102	680	0	0	392	56	48	262	86	0	0	0
RTOR Reduction (vph)	0	0	0	0	13	0	0	0	62	0	0	0
Lane Group Flow (vph)	0	782	0	0	436	0	48	262	24	0	0	0
Confl. Peds. (#/hr)	425					425	251		339			
Turn Type	pm+pt						Perm		Perm			
Protected Phases	1	6			2			4				
Permitted Phases	6						4		4			
Actuated Green, G (s)		55.0			45.0		25.0	25.0	25.0			
Effective Green, g (s)		55.0			45.0		25.0	25.0	25.0			
Actuated g/C Ratio		0.61			0.50		0.28	0.28	0.28			
Clearance Time (s)		5.0			5.0		5.0	5.0	5.0			
Lane Grp Cap (vph)		1743			1653		332	518	282			
v/s Ratio Prot		c0.02			0.13			c0.14				
v/s Ratio Perm		c0.25					0.04		0.02			
v/c Ratio		0.45			0.26		0.14	0.51	0.08			
Uniform Delay, d1		9.4			13.0		24.5	27.3	24.0			
Progression Factor		1.00			0.56		0.86	0.89	1.27			
Incremental Delay, d2		0.8			0.4		0.9	3.5	0.6			
Delay (s)		10.2			7.7		22.0	27.7	31.0			
Level of Service		B			A		C	C	C			
Approach Delay (s)		10.2			7.7			27.8			0.0	
Approach LOS		B			A			C			A	

Intersection Summary			
HCM Average Control Delay	13.8	HCM Level of Service	B
HCM Volume to Capacity ratio	0.46		
Actuated Cycle Length (s)	90.0	Sum of lost time (s)	10.0
Intersection Capacity Utilization	57.9%	ICU Level of Service	B
Analysis Period (min)	15		
c Critical Lane Group			

Movement	SEL	SET	SER	NWL	NWT	NWR	NEL	NET	NER	SWL	SWT	SWR
Lane Configurations												
Volume (vph)	86	566	0	0	370	58	39	199	85	0	0	0
Ideal Flow (vphpl)	1900	1900	1900	1900	1900	1900	1900	1900	1900	1900	1900	1900
Total Lost time (s)		5.0			5.0		5.0	5.0	5.0			
Lane Util. Factor		0.95			0.95		1.00	1.00	1.00			
Frpb, ped/bikes		1.00			0.95		1.00	1.00	0.68			
Flpb, ped/bikes		0.99			1.00		0.68	1.00	1.00			
Frt		1.00			0.98		1.00	1.00	0.85			
Flt Protected		0.99			1.00		0.95	1.00	1.00			
Satd. Flow (prot)		3471			3299		1206	1863	1070			
Flt Permitted		0.79			1.00		0.95	1.00	1.00			
Satd. Flow (perm)		2749			3299		1206	1863	1070			
Peak-hour factor, PHF	0.94	0.94	0.94	0.82	0.82	0.82	0.87	0.87	0.87	0.92	0.92	0.92
Adj. Flow (vph)	91	602	0	0	451	71	45	229	98	0	0	0
RTOR Reduction (vph)	0	0	0	0	16	0	0	0	67	0	0	0
Lane Group Flow (vph)	0	693	0	0	506	0	45	229	31	0	0	0
Confl. Peds. (#/hr)	374					374	262		263			
Turn Type	pm+pt						Perm		Perm			
Protected Phases	1	6			2			4				
Permitted Phases	6						4		4			
Actuated Green, G (s)		45.0			35.0		25.0	25.0	25.0			
Effective Green, g (s)		45.0			35.0		25.0	25.0	25.0			
Actuated g/C Ratio		0.56			0.44		0.31	0.31	0.31			
Clearance Time (s)		5.0			5.0		5.0	5.0	5.0			
Lane Grp Cap (vph)		1591			1443		377	582	334			
v/s Ratio Prot		c0.03			0.15			c0.12				
v/s Ratio Perm		c0.22					0.04		0.03			
v/c Ratio		0.44			0.35		0.12	0.39	0.09			
Uniform Delay, d1		10.1			15.0		19.6	21.6	19.5			
Progression Factor		1.00			0.65		0.74	0.77	1.40			
Incremental Delay, d2		0.9			0.7		0.6	2.0	0.5			
Delay (s)		11.0			10.5		15.1	18.6	27.7			
Level of Service		B			B		B	B	C			
Approach Delay (s)		11.0			10.5			20.6			0.0	
Approach LOS		B			B			C			A	

Intersection Summary			
HCM Average Control Delay	13.1	HCM Level of Service	B
HCM Volume to Capacity ratio	0.42		
Actuated Cycle Length (s)	80.0	Sum of lost time (s)	10.0
Intersection Capacity Utilization	57.3%	ICU Level of Service	B
Analysis Period (min)	15		
c Critical Lane Group			

Movement	SEL	SET	SER	NWL	NWT	NWR	NEL	NET	NER	SWL	SWT	SWR
Lane Configurations												
Volume (vph)	0	650	0	0	325	23	18	28	15	66	0	73
Ideal Flow (vphpl)	1900	1900	1900	1900	1900	1900	1900	1900	1900	1900	1900	1900
Total Lost time (s)		5.0			5.0			5.0			5.0	
Lane Util. Factor		0.95			0.95			1.00			1.00	
Frpb, ped/bikes		1.00			0.96			0.92			0.82	
Flpb, ped/bikes		1.00			1.00			0.93			0.86	
Frt		1.00			0.99			0.97			0.93	
Flt Protected		1.00			1.00			0.99			0.98	
Satd. Flow (prot)		3539			3352			1518			1203	
Flt Permitted		1.00			1.00			0.89			0.82	
Satd. Flow (perm)		3539			3352			1377			1009	
Peak-hour factor, PHF	0.93	0.93	0.93	0.86	0.86	0.86	0.69	0.69	0.69	0.87	0.87	0.87
Adj. Flow (vph)	0	699	0	0	378	27	26	41	22	76	0	84
RTOR Reduction (vph)	0	0	0	0	6	0	0	13	0	0	44	0
Lane Group Flow (vph)	0	699	0	0	399	0	0	76	0	0	116	0
Confl. Peds. (#/hr)						430	270		291	291		270
Turn Type							Perm			Perm		
Protected Phases		6			2			4			8	
Permitted Phases							4			8		
Actuated Green, G (s)		55.0			55.0			25.0			25.0	
Effective Green, g (s)		55.0			55.0			25.0			25.0	
Actuated g/C Ratio		0.61			0.61			0.28			0.28	
Clearance Time (s)		5.0			5.0			5.0			5.0	
Lane Grp Cap (vph)		2163			2048			383			280	
v/s Ratio Prot		c0.20			0.12							
v/s Ratio Perm								0.06			c0.11	
v/c Ratio		0.32			0.19			0.20			0.41	
Uniform Delay, d1		8.5			7.7			24.8			26.5	
Progression Factor		0.30			0.03			0.88			0.79	
Incremental Delay, d2		0.4			0.2			1.1			3.9	
Delay (s)		2.9			0.4			23.0			25.0	
Level of Service		A			A			C			C	
Approach Delay (s)		2.9			0.4			23.0			25.0	
Approach LOS		A			A			C			C	

Intersection Summary			
HCM Average Control Delay	6.1	HCM Level of Service	A
HCM Volume to Capacity ratio	0.35		
Actuated Cycle Length (s)	90.0	Sum of lost time (s)	10.0
Intersection Capacity Utilization	44.1%	ICU Level of Service	A
Analysis Period (min)	15		
c Critical Lane Group			

Movement	SEL	SET	SER	NWL	NWT	NWR	NEL	NET	NER	SWL	SWT	SWR
Lane Configurations												
Volume (vph)	0	651	0	0	365	20	21	38	14	64	0	42
Ideal Flow (vphpl)	1900	1900	1900	1900	1900	1900	1900	1900	1900	1900	1900	1900
Total Lost time (s)		5.0			5.0			5.0			5.0	
Lane Util. Factor		0.95			0.95			1.00			1.00	
Frpb, ped/bikes		1.00			0.97			0.94			0.87	
Flpb, ped/bikes		1.00			1.00			0.93			0.83	
Frt		1.00			0.99			0.97			0.95	
Flt Protected		1.00			1.00			0.99			0.97	
Satd. Flow (prot)		3539			3400			1557			1236	
Flt Permitted		1.00			1.00			0.91			0.78	
Satd. Flow (perm)		3539			3400			1433			1000	
Peak-hour factor, PHF	0.89	0.89	0.89	0.87	0.87	0.87	0.83	0.83	0.83	0.79	0.79	0.79
Adj. Flow (vph)	0	731	0	0	420	23	25	46	17	81	0	53
RTOR Reduction (vph)	0	0	0	0	5	0	0	11	0	0	31	0
Lane Group Flow (vph)	0	731	0	0	438	0	0	77	0	0	103	0
Confl. Peds. (#/hr)						404	307		254	254		307
Turn Type							Perm			Perm		
Protected Phases		6			2			4			8	
Permitted Phases							4			8		
Actuated Green, G (s)		45.0			45.0			25.0			25.0	
Effective Green, g (s)		45.0			45.0			25.0			25.0	
Actuated g/C Ratio		0.56			0.56			0.31			0.31	
Clearance Time (s)		5.0			5.0			5.0			5.0	
Lane Grp Cap (vph)		1991			1913			448			313	
v/s Ratio Prot		c0.21			0.13							
v/s Ratio Perm								0.05			c0.10	
v/c Ratio		0.37			0.23			0.17			0.33	
Uniform Delay, d1		9.6			8.8			20.0			21.1	
Progression Factor		0.44			0.09			0.84			0.83	
Incremental Delay, d2		0.5			0.3			0.8			2.5	
Delay (s)		4.7			1.1			17.5			19.9	
Level of Service		A			A			B			B	
Approach Delay (s)		4.7			1.1			17.5			19.9	
Approach LOS		A			A			B			B	

Intersection Summary			
HCM Average Control Delay	5.8	HCM Level of Service	A
HCM Volume to Capacity ratio	0.35		
Actuated Cycle Length (s)	80.0	Sum of lost time (s)	10.0
Intersection Capacity Utilization	41.7%	ICU Level of Service	A
Analysis Period (min)	15		
c Critical Lane Group			

Movement	SEL	SET	NWT	NWR	SWL	SWR
Lane Configurations						
Volume (vph)	130	581	352	63	0	0
Ideal Flow (vphpl)	1900	1900	1900	1900	1900	1900
Total Lost time (s)		5.0	5.0			
Lane Util. Factor		0.95	0.95			
Frpb, ped/bikes		1.00	0.90			
Flpb, ped/bikes		0.96	1.00			
Frt		1.00	0.98			
Flt Protected		0.99	1.00			
Satd. Flow (prot)		3379	3108			
Flt Permitted		0.73	1.00			
Satd. Flow (perm)		2491	3108			
Peak-hour factor, PHF	0.91	0.91	0.93	0.93	0.92	0.92
Adj. Flow (vph)	143	638	378	68	0	0
RTOR Reduction (vph)	0	0	0	0	0	0
Lane Group Flow (vph)	0	781	446	0	0	0
Confl. Peds. (#/hr)	456			456		
Turn Type	pm+pt					
Protected Phases	1	6	2			
Permitted Phases	6					
Actuated Green, G (s)		60.0	45.0			
Effective Green, g (s)		60.0	45.0			
Actuated g/C Ratio		0.67	0.50			
Clearance Time (s)		5.0	5.0			
Lane Grp Cap (vph)		1759	1554			
v/s Ratio Prot		c0.05	0.14			
v/s Ratio Perm		c0.25				
v/c Ratio		0.44	0.29			
Uniform Delay, d1		7.1	13.1			
Progression Factor		0.83	0.75			
Incremental Delay, d2		0.8	0.5			
Delay (s)		6.7	10.4			
Level of Service		A	B			
Approach Delay (s)		6.7	10.4		0.0	
Approach LOS		A	B		A	

Intersection Summary			
HCM Average Control Delay	8.0	HCM Level of Service	A
HCM Volume to Capacity ratio	0.44		
Actuated Cycle Length (s)	90.0	Sum of lost time (s)	30.0
Intersection Capacity Utilization	41.5%	ICU Level of Service	A
Analysis Period (min)	15		
c Critical Lane Group			

Movement	SEL	SET	NWT	NWR	SWL	SWR
Lane Configurations						
Volume (vph)	118	611	385	101	0	0
Ideal Flow (vphpl)	1900	1900	1900	1900	1900	1900
Total Lost time (s)		5.0	5.0			
Lane Util. Factor		0.95	0.95			
Frpb, ped/bikes		1.00	0.87			
Flpb, ped/bikes		0.98	1.00			
Frt		1.00	0.97			
Flt Protected		0.99	1.00			
Satd. Flow (prot)		3425	2983			
Flt Permitted		0.71	1.00			
Satd. Flow (perm)		2449	2983			
Peak-hour factor, PHF	0.94	0.94	0.90	0.90	0.92	0.92
Adj. Flow (vph)	126	650	428	112	0	0
RTOR Reduction (vph)	0	0	29	0	0	0
Lane Group Flow (vph)	0	776	511	0	0	0
Confl. Peds. (#/hr)	440			440		
Turn Type	pm+pt					
Protected Phases	1	6	2			
Permitted Phases	6					
Actuated Green, G (s)		45.0	35.0			
Effective Green, g (s)		45.0	35.0			
Actuated g/C Ratio		0.56	0.44			
Clearance Time (s)		5.0	5.0			
Lane Grp Cap (vph)		1439	1305			
v/s Ratio Prot		c0.03	0.17			
v/s Ratio Perm		c0.27				
v/c Ratio		0.54	0.39			
Uniform Delay, d1		11.0	15.3			
Progression Factor		0.69	0.66			
Incremental Delay, d2		1.4	0.9			
Delay (s)		9.0	10.9			
Level of Service		A	B			
Approach Delay (s)		9.0	10.9		0.0	
Approach LOS		A	B		A	

Intersection Summary			
HCM Average Control Delay	9.8	HCM Level of Service	A
HCM Volume to Capacity ratio	0.53		
Actuated Cycle Length (s)	80.0	Sum of lost time (s)	35.0
Intersection Capacity Utilization	44.5%	ICU Level of Service	A
Analysis Period (min)	15		
c Critical Lane Group			

Movement	SEL	SET	SER	NWL	NWT	NWR	NEL	NET	NER	SWL	SWT	SWR
Lane Configurations												
Volume (vph)	0	597	20	6	359	0	0	0	0	39	13	60
Ideal Flow (vphpl)	1900	1900	1900	1900	1900	1900	1900	1900	1900	1900	1900	1900
Total Lost time (s)		5.0			5.0						5.0	5.0
Lane Util. Factor		0.95			0.95						1.00	1.00
Frpb, ped/bikes		0.98			1.00						1.00	0.68
Flpb, ped/bikes		1.00			1.00						0.76	1.00
Frt		1.00			1.00						1.00	0.85
Flt Protected		1.00			1.00						0.96	1.00
Satd. Flow (prot)		3442			3521						1367	1071
Flt Permitted		1.00			0.95						0.96	1.00
Satd. Flow (perm)		3442			3330						1367	1071
Peak-hour factor, PHF	0.90	0.90	0.90	0.91	0.91	0.91	0.92	0.92	0.92	0.82	0.82	0.82
Adj. Flow (vph)	0	663	22	7	395	0	0	0	0	48	16	73
RTOR Reduction (vph)	0	3	0	0	0	0	0	0	0	0	0	57
Lane Group Flow (vph)	0	682	0	0	402	0	0	0	0	0	64	16
Confl. Peds. (#/hr)			542	542						232		230
Turn Type				Perm						Perm		Perm
Protected Phases		6			2						8	
Permitted Phases				2						8		8
Actuated Green, G (s)		60.0			60.0						20.0	20.0
Effective Green, g (s)		60.0			60.0						20.0	20.0
Actuated g/C Ratio		0.67			0.67						0.22	0.22
Clearance Time (s)		5.0			5.0						5.0	5.0
Lane Grp Cap (vph)		2295			2220						304	238
v/s Ratio Prot		c0.20										
v/s Ratio Perm					0.12						0.05	0.02
v/c Ratio		0.30			0.18						0.21	0.07
Uniform Delay, d1		6.2			5.7						28.6	27.6
Progression Factor		0.32			0.42						0.99	1.45
Incremental Delay, d2		0.3			0.2						1.3	0.5
Delay (s)		2.3			2.6						29.5	40.4
Level of Service		A			A						C	D
Approach Delay (s)		2.3			2.6			0.0			35.3	
Approach LOS		A			A			A			D	

Intersection Summary			
HCM Average Control Delay	6.1	HCM Level of Service	A
HCM Volume to Capacity ratio	0.28		
Actuated Cycle Length (s)	90.0	Sum of lost time (s)	10.0
Intersection Capacity Utilization	39.1%	ICU Level of Service	A
Analysis Period (min)	15		
c Critical Lane Group			

Movement	SEL	SET	SER	NWL	NWT	NWR	NEL	NET	NER	SWL	SWT	SWR
Lane Configurations												
Volume (vph)	0	592	19	4	425	0	0	0	0	55	14	61
Ideal Flow (vphpl)	1900	1900	1900	1900	1900	1900	1900	1900	1900	1900	1900	1900
Total Lost time (s)		5.0			5.0						5.0	5.0
Lane Util. Factor		0.95			0.95						1.00	1.00
Frpb, ped/bikes		1.00			1.00						1.00	0.75
Flpb, ped/bikes		1.00			1.00						0.74	1.00
Frt		1.00			1.00						1.00	0.85
Flt Protected		1.00			1.00						0.96	1.00
Satd. Flow (prot)		3523			3538						1332	1187
Flt Permitted		1.00			0.95						0.96	1.00
Satd. Flow (perm)		3523			3367						1332	1187
Peak-hour factor, PHF	0.94	0.94	0.94	0.90	0.90	0.90	0.92	0.92	0.92	0.86	0.86	0.86
Adj. Flow (vph)	0	630	20	4	472	0	0	0	0	64	16	71
RTOR Reduction (vph)	0	3	0	0	0	0	0	0	0	0	0	53
Lane Group Flow (vph)	0	647	0	0	476	0	0	0	0	0	80	18
Confl. Peds. (#/hr)										267		162
Turn Type				Perm						Perm		Perm
Protected Phases		6			2						8	
Permitted Phases				2						8		8
Actuated Green, G (s)		50.0			50.0						20.0	20.0
Effective Green, g (s)		50.0			50.0						20.0	20.0
Actuated g/C Ratio		0.62			0.62						0.25	0.25
Clearance Time (s)		5.0			5.0						5.0	5.0
Lane Grp Cap (vph)		2202			2104						333	297
v/s Ratio Prot		c0.18										
v/s Ratio Perm					0.14						0.06	0.01
v/c Ratio		0.29			0.23						0.24	0.06
Uniform Delay, d1		6.9			6.6						23.9	22.8
Progression Factor		0.09			0.39						1.08	1.42
Incremental Delay, d2		0.3			0.2						1.5	0.3
Delay (s)		0.9			2.8						27.3	32.8
Level of Service		A			A						C	C
Approach Delay (s)		0.9			2.8			0.0			29.9	
Approach LOS		A			A			A			C	

Intersection Summary			
HCM Average Control Delay	5.0	HCM Level of Service	A
HCM Volume to Capacity ratio	0.28		
Actuated Cycle Length (s)	80.0	Sum of lost time (s)	10.0
Intersection Capacity Utilization	38.6%	ICU Level of Service	A
Analysis Period (min)	15		
c Critical Lane Group			

Movement	SEL	SET	SER	NWL	NWT	NWR	NEL	NET	NER	SWL	SWT	SWR
Lane Configurations												
Volume (vph)	103	648	55	19	259	11	84	185	0	72	72	26
Ideal Flow (vphpl)	1900	1900	1900	1900	1900	1900	1900	1900	1900	1900	1900	1900
Total Lost time (s)	5.0	5.0			5.0			5.0			5.0	
Lane Util. Factor	1.00	0.95			0.95			0.95			0.95	
Frpb, ped/bikes	1.00	0.95			0.99			1.00			0.94	
Flpb, ped/bikes	0.92	1.00			0.99			0.91			0.93	
Frt	1.00	0.99			0.99			1.00			0.98	
Flt Protected	0.95	1.00			1.00			0.98			0.98	
Satd. Flow (prot)	1637	3323			3416			3179			2979	
Flt Permitted	0.48	1.00			0.88			0.79			0.72	
Satd. Flow (perm)	835	3323			3022			2543			2190	
Peak-hour factor, PHF	0.87	0.87	0.87	0.87	0.87	0.87	0.80	0.80	0.80	0.92	0.92	0.92
Adj. Flow (vph)	118	745	63	22	298	13	105	231	0	78	78	28
RTOR Reduction (vph)	0	7	0	0	3	0	0	0	0	0	16	0
Lane Group Flow (vph)	118	801	0	0	330	0	0	336	0	0	168	0
Confl. Peds. (#/hr)	218		415	415		218	363			160		363
Turn Type	pm+pt			Perm			Perm			Perm		
Protected Phases	1	6			2			4			8	
Permitted Phases	6			2			4			8		
Actuated Green, G (s)	50.0	50.0			40.0			30.0			30.0	
Effective Green, g (s)	50.0	50.0			40.0			30.0			30.0	
Actuated g/C Ratio	0.56	0.56			0.44			0.33			0.33	
Clearance Time (s)	5.0	5.0			5.0			5.0			5.0	
Lane Grp Cap (vph)	508	1846			1343			848			730	
v/s Ratio Prot	0.01	c0.24										
v/s Ratio Perm	0.12				0.11			c0.13			0.08	
v/c Ratio	0.23	0.43			0.25			0.40			0.23	
Uniform Delay, d1	9.8	11.7			15.6			23.0			21.7	
Progression Factor	0.77	0.68			1.00			1.00			0.63	
Incremental Delay, d2	1.1	0.7			0.4			1.4			0.6	
Delay (s)	8.6	8.8			16.0			24.4			14.2	
Level of Service	A	A			B			C			B	
Approach Delay (s)		8.7			16.0			24.4			14.2	
Approach LOS		A			B			C			B	

Intersection Summary			
HCM Average Control Delay	13.6	HCM Level of Service	B
HCM Volume to Capacity ratio	0.42		
Actuated Cycle Length (s)	90.0	Sum of lost time (s)	10.0
Intersection Capacity Utilization	71.3%	ICU Level of Service	C
Analysis Period (min)	15		
c Critical Lane Group			

Movement	SEL	SET	SER	NWL	NWT	NWR	NEL	NET	NER	SWL	SWT	SWR
Lane Configurations												
Volume (vph)	95	483	69	32	296	15	102	228	0	69	61	31
Ideal Flow (vphpl)	1900	1900	1900	1900	1900	1900	1900	1900	1900	1900	1900	1900
Total Lost time (s)	5.0	5.0			5.0			5.0			5.0	
Lane Util. Factor	1.00	0.95			0.95			0.95			0.95	
Frpb, ped/bikes	1.00	0.92			0.98			1.00			0.93	
Flpb, ped/bikes	0.92	1.00			0.97			0.92			0.92	
Frt	1.00	0.98			0.99			1.00			0.97	
Flt Protected	0.95	1.00			1.00			0.98			0.98	
Satd. Flow (prot)	1631	3185			3347			3200			2894	
Flt Permitted	0.44	1.00			0.87			0.79			0.71	
Satd. Flow (perm)	760	3185			2912			2557			2108	
Peak-hour factor, PHF	0.93	0.93	0.93	0.94	0.94	0.94	0.88	0.88	0.88	0.84	0.84	0.84
Adj. Flow (vph)	102	519	74	34	315	16	116	259	0	82	73	37
RTOR Reduction (vph)	0	14	0	0	4	0	0	0	0	0	23	0
Lane Group Flow (vph)	102	579	0	0	361	0	0	375	0	0	169	0
Confl. Peds. (#/hr)	491		514	514		491	351			258		351
Turn Type	pm+pt			Perm			Perm			Perm		
Protected Phases	1	6			2			4			8	
Permitted Phases	6			2			4			8		
Actuated Green, G (s)	40.0	40.0			30.0			30.0			30.0	
Effective Green, g (s)	40.0	40.0			30.0			30.0			30.0	
Actuated g/C Ratio	0.50	0.50			0.38			0.38			0.38	
Clearance Time (s)	5.0	5.0			5.0			5.0			5.0	
Lane Grp Cap (vph)	434	1593			1092			959			791	
v/s Ratio Prot	0.01	c0.18										
v/s Ratio Perm	0.10				0.12			c0.15			0.08	
v/c Ratio	0.24	0.36			0.33			0.39			0.21	
Uniform Delay, d1	10.9	12.2			17.8			18.3			17.0	
Progression Factor	1.25	1.12			1.00			1.00			0.49	
Incremental Delay, d2	1.2	0.6			0.8			1.2			0.6	
Delay (s)	14.9	14.3			18.6			19.5			8.9	
Level of Service	B	B			B			B			A	
Approach Delay (s)		14.4			18.6			19.5			8.9	
Approach LOS		B			B			B			A	

Intersection Summary			
HCM Average Control Delay	15.9	HCM Level of Service	B
HCM Volume to Capacity ratio	0.38		
Actuated Cycle Length (s)	80.0	Sum of lost time (s)	10.0
Intersection Capacity Utilization	69.4%	ICU Level of Service	C
Analysis Period (min)	15		
c Critical Lane Group			

Movement	SET	SER	NWL	NWT	NEL	NER
Lane Configurations						
Volume (vph)	0	0	201	1679	399	0
Ideal Flow (vphpl)	1900	1900	1900	1900	1900	1900
Total Lost time (s)				5.0	5.0	
Lane Util. Factor				0.91	0.97	
Frpb, ped/bikes				1.00	1.00	
Flpb, ped/bikes				0.98	1.00	
Frt				1.00	1.00	
Flt Protected				0.99	0.95	
Satd. Flow (prot)				4941	3433	
Flt Permitted				0.99	0.95	
Satd. Flow (perm)				4941	3433	
Peak-hour factor, PHF	0.92	0.92	0.94	0.94	0.88	0.88
Adj. Flow (vph)	0	0	214	1786	453	0
RTOR Reduction (vph)	0	0	0	0	0	0
Lane Group Flow (vph)	0	0	0	2000	453	0
Confl. Peds. (#/hr)			77			
Turn Type			Perm			
Protected Phases				2	4	
Permitted Phases			2			
Actuated Green, G (s)				55.0	25.0	
Effective Green, g (s)				55.0	25.0	
Actuated g/C Ratio				0.61	0.28	
Clearance Time (s)				5.0	5.0	
Lane Grp Cap (vph)				3020	954	
v/s Ratio Prot					c0.13	
v/s Ratio Perm				0.40		
v/c Ratio				0.66	0.47	
Uniform Delay, d1				11.4	27.0	
Progression Factor				0.76	1.00	
Incremental Delay, d2				1.0	1.7	
Delay (s)				9.8	28.7	
Level of Service				A	C	
Approach Delay (s)	0.0			9.8	28.7	
Approach LOS	A			A	C	

Intersection Summary			
HCM Average Control Delay	13.3	HCM Level of Service	B
HCM Volume to Capacity ratio	0.60		
Actuated Cycle Length (s)	90.0	Sum of lost time (s)	10.0
Intersection Capacity Utilization	56.2%	ICU Level of Service	B
Analysis Period (min)	15		
c Critical Lane Group			

Movement	SET	SER	NWL	NWT	NEL	NER
Lane Configurations						
Volume (vph)	0	0	194	1519	284	0
Ideal Flow (vphpl)	1900	1900	1900	1900	1900	1900
Total Lost time (s)				5.0	5.0	
Lane Util. Factor				0.91	0.97	
Frpb, ped/bikes				1.00	1.00	
Flpb, ped/bikes				0.98	1.00	
Frt				1.00	1.00	
Flt Protected				0.99	0.95	
Satd. Flow (prot)				4968	3433	
Flt Permitted				0.99	0.95	
Satd. Flow (perm)				4968	3433	
Peak-hour factor, PHF	0.92	0.92	0.91	0.91	0.72	0.72
Adj. Flow (vph)	0	0	213	1669	394	0
RTOR Reduction (vph)	0	0	0	0	0	0
Lane Group Flow (vph)	0	0	0	1882	394	0
Confl. Peds. (#/hr)			62			
Turn Type			Perm			
Protected Phases				2	4	
Permitted Phases			2			
Actuated Green, G (s)				50.0	20.0	
Effective Green, g (s)				50.0	20.0	
Actuated g/C Ratio				0.62	0.25	
Clearance Time (s)				5.0	5.0	
Lane Grp Cap (vph)				3105	858	
v/s Ratio Prot					c0.11	
v/s Ratio Perm				0.38		
v/c Ratio				0.61	0.46	
Uniform Delay, d1				9.1	25.4	
Progression Factor				0.73	1.00	
Incremental Delay, d2				0.8	1.8	
Delay (s)				7.4	27.2	
Level of Service				A	C	
Approach Delay (s)	0.0			7.4	27.2	
Approach LOS	A			A	C	

Intersection Summary			
HCM Average Control Delay	10.8	HCM Level of Service	B
HCM Volume to Capacity ratio	0.56		
Actuated Cycle Length (s)	80.0	Sum of lost time (s)	10.0
Intersection Capacity Utilization	49.7%	ICU Level of Service	A
Analysis Period (min)	15		
c Critical Lane Group			

HCM Unsignalized Intersection Capacity Analysis
31: Ala Wai & Nohonani

9/22/2011

Movement	SET	SER	NWL	NWT	NEL	NER
Lane Configurations						
Volume (veh/h)	0	0	157	1844	68	0
Sign Control	Free			Free	Stop	
Grade	0%			0%	0%	
Peak Hour Factor	0.92	0.92	0.95	0.95	0.65	0.65
Hourly flow rate (vph)	0	0	165	1941	105	0
Pedestrians					77	
Lane Width (ft)					12.0	
Walking Speed (ft/s)					4.0	
Percent Blockage					6	
Right turn flare (veh)						
Median type	None			None		
Median storage veh)						
Upstream signal (ft)	321			924		
pX, platoon unblocked					0.85	
vC, conflicting volume			77		1055	77
vC1, stage 1 conf vol						
vC2, stage 2 conf vol						
vCu, unblocked vol			77		448	77
tC, single (s)			4.1		*5.8	6.9
tC, 2 stage (s)						
tF (s)			2.2		*2.5	3.3
p0 queue free %			88		82	100
cM capacity (veh/h)			1422		573	906

Direction, Lane #	NW 1	NW 2	NW 3	NE 1
Volume Total	553	776	776	105
Volume Left	165	0	0	105
Volume Right	0	0	0	0
cSH	1422	1700	1700	573
Volume to Capacity	0.12	0.46	0.46	0.18
Queue Length 95th (ft)	10	0	0	17
Control Delay (s)	3.2	0.0	0.0	12.7
Lane LOS	A			B
Approach Delay (s)	0.8			12.7
Approach LOS				B

Intersection Summary			
Average Delay	1.4		
Intersection Capacity Utilization	49.2%	ICU Level of Service	A
Analysis Period (min)	15		

* User Entered Value

Movement	SET	SER	NWL	NWT	NEL	NER
Lane Configurations						
Volume (veh/h)	0	0	151	1659	54	0
Sign Control	Free			Free	Stop	
Grade	0%			0%	0%	
Peak Hour Factor	0.92	0.92	0.93	0.93	0.65	0.65
Hourly flow rate (vph)	0	0	162	1784	83	0
Pedestrians					60	
Lane Width (ft)					12.0	
Walking Speed (ft/s)					4.0	
Percent Blockage					5	
Right turn flare (veh)						
Median type	None			None		
Median storage veh)						
Upstream signal (ft)	321			924		
pX, platoon unblocked					0.91	
vC, conflicting volume			60		979	60
vC1, stage 1 conf vol						
vC2, stage 2 conf vol						
vCu, unblocked vol			60		651	60
tC, single (s)			4.1		*5.8	6.9
tC, 2 stage (s)						
tF (s)			2.2		*2.5	3.3
p0 queue free %			89		83	100
cM capacity (veh/h)			1465		485	943

Direction, Lane #	NW 1	NW 2	NW 3	NE 1
Volume Total	519	714	714	83
Volume Left	162	0	0	83
Volume Right	0	0	0	0
cSH	1465	1700	1700	485
Volume to Capacity	0.11	0.42	0.42	0.17
Queue Length 95th (ft)	9	0	0	15
Control Delay (s)	3.2	0.0	0.0	14.0
Lane LOS	A			B
Approach Delay (s)	0.8			14.0
Approach LOS				B

Intersection Summary			
Average Delay	1.4		
Intersection Capacity Utilization	45.1%	ICU Level of Service	A
Analysis Period (min)	15		

* User Entered Value

Movement	SET	SER	NWL	NWT	NEL	NER
Lane Configurations				↑↑↑	↰	
Volume (veh/h)	0	0	0	1775	208	0
Sign Control	Free			Free	Stop	
Grade	0%			0%	0%	
Peak Hour Factor	0.92	0.92	0.93	0.93	0.75	0.75
Hourly flow rate (vph)	0	0	0	1909	277	0
Pedestrians						
Lane Width (ft)						
Walking Speed (ft/s)						
Percent Blockage						
Right turn flare (veh)						
Median type	None			None		
Median storage veh)						
Upstream signal (ft)	640			605		
pX, platoon unblocked					0.81	
vC, conflicting volume			0		636	0
vC1, stage 1 conf vol						
vC2, stage 2 conf vol						
vCu, unblocked vol			0		0	0
tC, single (s)			4.1		*5.8	6.9
tC, 2 stage (s)						
tF (s)			2.2		*2.5	3.3
p0 queue free %			100		76	100
cM capacity (veh/h)			1622		1166	1084

Direction, Lane #	NW 1	NW 2	NW 3	NE 1
Volume Total	636	636	636	277
Volume Left	0	0	0	277
Volume Right	0	0	0	0
cSH	1700	1700	1700	1166
Volume to Capacity	0.37	0.37	0.37	0.24
Queue Length 95th (ft)	0	0	0	23
Control Delay (s)	0.0	0.0	0.0	9.1
Lane LOS				A
Approach Delay (s)	0.0			9.1
Approach LOS				A

Intersection Summary			
Average Delay	1.1		
Intersection Capacity Utilization	52.5%	ICU Level of Service	A
Analysis Period (min)	15		

* User Entered Value

Movement	SET	SER	NWL	NWT	NEL	NER
Lane Configurations				↑↑↑	↰	
Volume (veh/h)	0	0	0	1641	169	0
Sign Control	Free			Free	Stop	
Grade	0%			0%	0%	
Peak Hour Factor	0.92	0.92	0.94	0.94	0.89	0.89
Hourly flow rate (vph)	0	0	0	1746	190	0
Pedestrians						
Lane Width (ft)						
Walking Speed (ft/s)						
Percent Blockage						
Right turn flare (veh)						
Median type	None			None		
Median storage veh)						
Upstream signal (ft)	640			605		
pX, platoon unblocked					0.87	
vC, conflicting volume			0		582	0
vC1, stage 1 conf vol						
vC2, stage 2 conf vol						
vCu, unblocked vol			0		19	0
tC, single (s)			4.1		*5.8	6.9
tC, 2 stage (s)						
tF (s)			2.2		*2.5	3.3
p0 queue free %			100		85	100
cM capacity (veh/h)			1622		1230	1084

Direction, Lane #	NW 1	NW 2	NW 3	NE 1
Volume Total	582	582	582	190
Volume Left	0	0	0	190
Volume Right	0	0	0	0
cSH	1700	1700	1700	1230
Volume to Capacity	0.34	0.34	0.34	0.15
Queue Length 95th (ft)	0	0	0	14
Control Delay (s)	0.0	0.0	0.0	8.5
Lane LOS				A
Approach Delay (s)	0.0			8.5
Approach LOS				A

Intersection Summary			
Average Delay	0.8		
Intersection Capacity Utilization	47.7%	ICU Level of Service	A
Analysis Period (min)	15		

* User Entered Value

Movement	SET	SER	NWL	NWT	NEL	NER
Lane Configurations						
Volume (vph)	0	0	168	1660	313	0
Ideal Flow (vphpl)	1900	1900	1900	1900	1900	1900
Total Lost time (s)				5.0	5.0	
Lane Util. Factor				0.91	0.97	
Frpb, ped/bikes				1.00	1.00	
Flpb, ped/bikes				0.99	1.00	
Frt				1.00	1.00	
Flt Protected				1.00	0.95	
Satd. Flow (prot)				5005	3433	
Flt Permitted				1.00	0.95	
Satd. Flow (perm)				5005	3433	
Peak-hour factor, PHF	0.92	0.92	0.97	0.97	0.85	0.85
Adj. Flow (vph)	0	0	173	1711	368	0
RTOR Reduction (vph)	0	0	0	0	0	0
Lane Group Flow (vph)	0	0	0	1884	368	0
Confl. Peds. (#/hr)			73			
Turn Type			Perm			
Protected Phases				2	4	
Permitted Phases			2			
Actuated Green, G (s)				55.0	25.0	
Effective Green, g (s)				55.0	25.0	
Actuated g/C Ratio				0.61	0.28	
Clearance Time (s)				5.0	5.0	
Lane Grp Cap (vph)				3059	954	
v/s Ratio Prot					c0.11	
v/s Ratio Perm				0.38		
v/c Ratio				0.62	0.39	
Uniform Delay, d1				10.9	26.3	
Progression Factor				1.00	0.59	
Incremental Delay, d2				0.9	1.1	
Delay (s)				11.9	16.6	
Level of Service				B	B	
Approach Delay (s)	0.0			11.9	16.6	
Approach LOS	A			B	B	

Intersection Summary			
HCM Average Control Delay	12.6	HCM Level of Service	B
HCM Volume to Capacity ratio	0.54		
Actuated Cycle Length (s)	90.0	Sum of lost time (s)	10.0
Intersection Capacity Utilization	52.7%	ICU Level of Service	A
Analysis Period (min)	15		
c Critical Lane Group			

Movement	SET	SER	NWL	NWT	NEL	NER
Lane Configurations						
Volume (vph)	0	0	163	1391	377	0
Ideal Flow (vphpl)	1900	1900	1900	1900	1900	1900
Total Lost time (s)				5.0	5.0	
Lane Util. Factor				0.91	0.97	
Frpb, ped/bikes				1.00	1.00	
Flpb, ped/bikes				0.98	1.00	
Frt				1.00	1.00	
Flt Protected				0.99	0.95	
Satd. Flow (prot)				4982	3433	
Flt Permitted				0.99	0.95	
Satd. Flow (perm)				4982	3433	
Peak-hour factor, PHF	0.92	0.92	0.95	0.95	0.89	0.89
Adj. Flow (vph)	0	0	172	1464	424	0
RTOR Reduction (vph)	0	0	0	0	0	0
Lane Group Flow (vph)	0	0	0	1636	424	0
Confl. Peds. (#/hr)			96			
Turn Type			Perm			
Protected Phases				2	4	
Permitted Phases			2			
Actuated Green, G (s)				50.0	20.0	
Effective Green, g (s)				50.0	20.0	
Actuated g/C Ratio				0.62	0.25	
Clearance Time (s)				5.0	5.0	
Lane Grp Cap (vph)				3114	858	
v/s Ratio Prot					c0.12	
v/s Ratio Perm				0.33		
v/c Ratio				0.53	0.49	
Uniform Delay, d1				8.4	25.7	
Progression Factor				1.00	0.68	
Incremental Delay, d2				0.6	2.0	
Delay (s)				9.0	19.3	
Level of Service				A	B	
Approach Delay (s)	0.0			9.0	19.3	
Approach LOS	A			A	B	

Intersection Summary			
HCM Average Control Delay	11.1	HCM Level of Service	B
HCM Volume to Capacity ratio	0.52		
Actuated Cycle Length (s)	80.0	Sum of lost time (s)	10.0
Intersection Capacity Utilization	49.3%	ICU Level of Service	A
Analysis Period (min)	15		
c Critical Lane Group			

APPENDIX D

CAPACITY ANALYSIS CALCULATIONS
PROJECTED YEAR 2015 PEAK HOUR TRAFFIC
ANALYSIS WITHOUT PROJECT

Movement	SEL	SET	NWT	NWR	SWL	SWR
Lane Configurations						
Volume (vph)	209	1520	0	0	0	0
Ideal Flow (vphpl)	1900	1900	1900	1900	1900	1900
Total Lost time (s)	5.0	5.0				
Lane Util. Factor	0.81	0.81				
Frt	1.00	1.00				
Flt Protected	0.95	1.00				
Satd. Flow (prot)	1433	6031				
Flt Permitted	0.95	1.00				
Satd. Flow (perm)	1433	6031				
Peak-hour factor, PHF	0.94	0.94	0.92	0.92	0.92	0.92
Adj. Flow (vph)	222	1617	0	0	0	0
RTOR Reduction (vph)	0	0	0	0	0	0
Lane Group Flow (vph)	200	1639	0	0	0	0
Turn Type	Perm					
Protected Phases		4				
Permitted Phases	4					
Actuated Green, G (s)	55.0	55.0				
Effective Green, g (s)	55.0	55.0				
Actuated g/C Ratio	0.61	0.61				
Clearance Time (s)	5.0	5.0				
Lane Grp Cap (vph)	876	3686				
v/s Ratio Prot						
v/s Ratio Perm	0.14	0.27				
v/c Ratio	0.23	0.44				
Uniform Delay, d1	7.9	9.3				
Progression Factor	1.00	1.00				
Incremental Delay, d2	0.6	0.4				
Delay (s)	8.5	9.7				
Level of Service	A	A				
Approach Delay (s)		9.6	0.0		0.0	
Approach LOS		A	A		A	

Intersection Summary			
HCM Average Control Delay	9.6	HCM Level of Service	A
HCM Volume to Capacity ratio	0.44		
Actuated Cycle Length (s)	90.0	Sum of lost time (s)	35.0
Intersection Capacity Utilization	26.2%	ICU Level of Service	A
Analysis Period (min)	15		

c Critical Lane Group

Movement	SEL	SET	NWT	NWR	SWL	SWR
Lane Configurations						
Volume (vph)	247	1617	0	0	0	0
Ideal Flow (vphpl)	1900	1900	1900	1900	1900	1900
Total Lost time (s)	5.0	5.0				
Lane Util. Factor	0.81	0.81				
Frt	1.00	1.00				
Flt Protected	0.95	1.00				
Satd. Flow (prot)	1433	6031				
Flt Permitted	0.95	1.00				
Satd. Flow (perm)	1433	6031				
Peak-hour factor, PHF	0.94	0.94	0.92	0.92	0.92	0.92
Adj. Flow (vph)	263	1720	0	0	0	0
RTOR Reduction (vph)	0	0	0	0	0	0
Lane Group Flow (vph)	237	1746	0	0	0	0
Turn Type	Perm					
Protected Phases		4				
Permitted Phases	4					
Actuated Green, G (s)	45.0	45.0				
Effective Green, g (s)	45.0	45.0				
Actuated g/C Ratio	0.56	0.56				
Clearance Time (s)	5.0	5.0				
Lane Grp Cap (vph)	806	3392				
v/s Ratio Prot						
v/s Ratio Perm	0.17	0.29				
v/c Ratio	0.29	0.51				
Uniform Delay, d1	9.2	10.8				
Progression Factor	1.00	1.00				
Incremental Delay, d2	0.9	0.6				
Delay (s)	10.1	11.3				
Level of Service	B	B				
Approach Delay (s)		11.2	0.0		0.0	
Approach LOS		B	A		A	

Intersection Summary			
HCM Average Control Delay	11.2	HCM Level of Service	B
HCM Volume to Capacity ratio	0.51		
Actuated Cycle Length (s)	80.0	Sum of lost time (s)	35.0
Intersection Capacity Utilization	27.6%	ICU Level of Service	A
Analysis Period (min)	15		

c Critical Lane Group

Movement	SEL	SET	SER	NWL	NWT	NWR	NEL	NET	NER	SWL	SWT	SWR
Lane Configurations												
Volume (vph)	335	1180	38	0	0	0	0	24	14	0	0	0
Ideal Flow (vphpl)	1900	1900	1900	1900	1900	1900	1900	1900	1900	1900	1900	1900
Total Lost time (s)	5.0	5.0						5.0				
Lane Util. Factor	1.00	0.91						1.00				
Frpb, ped/bikes	1.00	0.97						0.86				
Flpb, ped/bikes	0.50	1.00						1.00				
Frt	1.00	1.00						0.95				
Flt Protected	0.95	1.00						1.00				
Satd. Flow (prot)	877	4919						1527				
Flt Permitted	0.95	1.00						1.00				
Satd. Flow (perm)	877	4919						1527				
Peak-hour factor, PHF	0.93	0.93	0.93	0.92	0.92	0.92	0.92	0.92	0.92	0.92	0.92	0.92
Adj. Flow (vph)	360	1269	41	0	0	0	0	26	15	0	0	0
RTOR Reduction (vph)	120	4	0	0	0	0	0	0	0	0	0	0
Lane Group Flow (vph)	240	1306	0	0	0	0	0	41	0	0	0	0
Confl. Peds. (#/hr)	783		1349						392			
Turn Type	Perm											
Protected Phases		6						4				
Permitted Phases	6											
Actuated Green, G (s)	60.0	60.0						20.0				
Effective Green, g (s)	60.0	60.0						20.0				
Actuated g/C Ratio	0.67	0.67						0.22				
Clearance Time (s)	5.0	5.0						5.0				
Lane Grp Cap (vph)	585	3279						339				
v/s Ratio Prot		0.27						c0.03				
v/s Ratio Perm	c0.27											
v/c Ratio	0.41	0.40						0.12				
Uniform Delay, d1	6.9	6.8						28.0				
Progression Factor	4.61	0.75						1.00				
Incremental Delay, d2	2.0	0.3						0.7				
Delay (s)	33.7	5.5						28.7				
Level of Service	C	A						C				
Approach Delay (s)		11.5			0.0			28.7			0.0	
Approach LOS		B			A			C			A	

Intersection Summary			
HCM Average Control Delay	11.9	HCM Level of Service	B
HCM Volume to Capacity ratio	0.34		
Actuated Cycle Length (s)	90.0	Sum of lost time (s)	10.0
Intersection Capacity Utilization	45.7%	ICU Level of Service	A
Analysis Period (min)	15		
c Critical Lane Group			

HCM Signalized Intersection Capacity Analysis
18: Kalakaua Ave. & Kaiulani Ave.

10/12/2011

Movement	SEL	SET	SER	NWL	NWT	NWR	NEL	NET	NER	SWL	SWT	SWR
Lane Configurations												
Volume (vph)	324	1161	41	0	0	0	0	28	13	0	0	0
Ideal Flow (vphpl)	1900	1900	1900	1900	1900	1900	1900	1900	1900	1900	1900	1900
Total Lost time (s)	5.0	5.0						5.0				
Lane Util. Factor	1.00	0.91						1.00				
Frpb, ped/bikes	1.00	0.97						0.89				
Flpb, ped/bikes	0.56	1.00						1.00				
Frt	1.00	0.99						0.96				
Flt Protected	0.95	1.00						1.00				
Satd. Flow (prot)	998	4902						1588				
Flt Permitted	0.95	1.00						1.00				
Satd. Flow (perm)	998	4902						1588				
Peak-hour factor, PHF	0.96	0.96	0.96	0.92	0.92	0.92	0.92	0.92	0.92	0.92	0.92	0.92
Adj. Flow (vph)	338	1209	43	0	0	0	0	30	14	0	0	0
RTOR Reduction (vph)	127	5	0	0	0	0	0	0	0	0	0	0
Lane Group Flow (vph)	211	1248	0	0	0	0	0	44	0	0	0	0
Confl. Peds. (#/hr)	653		1289						327			
Turn Type	Perm											
Protected Phases		6						4				
Permitted Phases	6											
Actuated Green, G (s)	50.0	50.0						20.0				
Effective Green, g (s)	50.0	50.0						20.0				
Actuated g/C Ratio	0.62	0.62						0.25				
Clearance Time (s)	5.0	5.0						5.0				
Lane Grp Cap (vph)	624	3064						397				
v/s Ratio Prot		c0.25						c0.03				
v/s Ratio Perm	0.21											
v/c Ratio	0.34	0.41						0.11				
Uniform Delay, d1	7.1	7.5						23.1				
Progression Factor	3.46	0.77						1.00				
Incremental Delay, d2	1.3	0.4						0.6				
Delay (s)	26.0	6.2						23.7				
Level of Service	C	A						C				
Approach Delay (s)		10.4			0.0			23.7			0.0	
Approach LOS		B			A			C			A	

Intersection Summary			
HCM Average Control Delay	10.7	HCM Level of Service	B
HCM Volume to Capacity ratio	0.32		
Actuated Cycle Length (s)	80.0	Sum of lost time (s)	10.0
Intersection Capacity Utilization	45.5%	ICU Level of Service	A
Analysis Period (min)	15		
c Critical Lane Group			

Movement	SEL	SET	SER	NWL	NWT	NWR	NEL	NET	NER	SWL	SWT	SWR
Lane Configurations												
Volume (vph)	88	633	0	0	382	50	45	246	81	0	0	0
Ideal Flow (vphpl)	1900	1900	1900	1900	1900	1900	1900	1900	1900	1900	1900	1900
Total Lost time (s)		5.0			5.0		5.0	5.0	5.0			
Lane Util. Factor		0.95			0.95		1.00	1.00	1.00			
Frpb, ped/bikes		1.00			0.96		1.00	1.00	0.64			
Flpb, ped/bikes		0.99			1.00		0.68	1.00	1.00			
Frt		1.00			0.98		1.00	1.00	0.85			
Flt Protected		0.99			1.00		0.95	1.00	1.00			
Satd. Flow (prot)		3467			3322		1195	1863	1014			
Flt Permitted		0.80			1.00		0.95	1.00	1.00			
Satd. Flow (perm)		2775			3322		1195	1863	1014			
Peak-hour factor, PHF	0.86	0.86	0.86	0.89	0.89	0.89	0.94	0.94	0.94	0.92	0.92	0.92
Adj. Flow (vph)	102	736	0	0	429	56	48	262	86	0	0	0
RTOR Reduction (vph)	0	0	0	0	12	0	0	0	62	0	0	0
Lane Group Flow (vph)	0	838	0	0	474	0	48	262	24	0	0	0
Confl. Peds. (#/hr)	425					425	251		339			
Turn Type	pm+pt						Perm		Perm			
Protected Phases	1	6			2			4				
Permitted Phases	6						4		4			
Actuated Green, G (s)		55.0			45.0		25.0	25.0	25.0			
Effective Green, g (s)		55.0			45.0		25.0	25.0	25.0			
Actuated g/C Ratio		0.61			0.50		0.28	0.28	0.28			
Clearance Time (s)		5.0			5.0		5.0	5.0	5.0			
Lane Grp Cap (vph)		1734			1661		332	518	282			
v/s Ratio Prot		c0.03			0.14			c0.14				
v/s Ratio Perm		c0.27					0.04		0.02			
v/c Ratio		0.48			0.29		0.14	0.51	0.08			
Uniform Delay, d1		9.7			13.1		24.5	27.3	24.0			
Progression Factor		1.00			0.55		0.86	0.89	1.26			
Incremental Delay, d2		1.0			0.4		0.9	3.5	0.6			
Delay (s)		10.6			7.6		22.0	27.8	31.0			
Level of Service		B			A		C	C	C			
Approach Delay (s)		10.6			7.6			27.8			0.0	
Approach LOS		B			A			C			A	

Intersection Summary			
HCM Average Control Delay	13.7	HCM Level of Service	B
HCM Volume to Capacity ratio	0.49		
Actuated Cycle Length (s)	90.0	Sum of lost time (s)	10.0
Intersection Capacity Utilization	59.2%	ICU Level of Service	B
Analysis Period (min)	15		
c Critical Lane Group			

Movement	SEL	SET	SER	NWL	NWT	NWR	NEL	NET	NER	SWL	SWT	SWR
Lane Configurations												
Volume (vph)	86	625	0	0	416	58	39	199	85	0	0	0
Ideal Flow (vphpl)	1900	1900	1900	1900	1900	1900	1900	1900	1900	1900	1900	1900
Total Lost time (s)		5.0			5.0		5.0	5.0	5.0			
Lane Util. Factor		0.95			0.95		1.00	1.00	1.00			
Frpb, ped/bikes		1.00			0.96		1.00	1.00	0.68			
Flpb, ped/bikes		0.99			1.00		0.68	1.00	1.00			
Frt		1.00			0.98		1.00	1.00	0.85			
Flt Protected		0.99			1.00		0.95	1.00	1.00			
Satd. Flow (prot)		3482			3322		1206	1863	1070			
Flt Permitted		0.77			1.00		0.95	1.00	1.00			
Satd. Flow (perm)		2713			3322		1206	1863	1070			
Peak-hour factor, PHF	0.94	0.94	0.94	0.82	0.82	0.82	0.87	0.87	0.87	0.92	0.92	0.92
Adj. Flow (vph)	91	665	0	0	507	71	45	229	98	0	0	0
RTOR Reduction (vph)	0	0	0	0	14	0	0	0	67	0	0	0
Lane Group Flow (vph)	0	756	0	0	565	0	45	229	31	0	0	0
Confl. Peds. (#/hr)	374					374	262		263			
Turn Type	pm+pt						Perm		Perm			
Protected Phases	1	6			2			4				
Permitted Phases	6						4		4			
Actuated Green, G (s)		45.0			35.0		25.0	25.0	25.0			
Effective Green, g (s)		45.0			35.0		25.0	25.0	25.0			
Actuated g/C Ratio		0.56			0.44		0.31	0.31	0.31			
Clearance Time (s)		5.0			5.0		5.0	5.0	5.0			
Lane Grp Cap (vph)		1574			1453		377	582	334			
v/s Ratio Prot		c0.03			0.17			c0.12				
v/s Ratio Perm		c0.24					0.04		0.03			
v/c Ratio		0.48			0.39		0.12	0.39	0.09			
Uniform Delay, d1		10.5			15.2		19.6	21.6	19.5			
Progression Factor		1.00			0.69		0.73	0.77	1.39			
Incremental Delay, d2		1.1			0.8		0.6	2.0	0.5			
Delay (s)		11.5			11.3		15.0	18.6	27.6			
Level of Service		B			B		B	B	C			
Approach Delay (s)		11.5			11.3			20.5			0.0	
Approach LOS		B			B			C			A	

Intersection Summary			
HCM Average Control Delay	13.4	HCM Level of Service	B
HCM Volume to Capacity ratio	0.45		
Actuated Cycle Length (s)	80.0	Sum of lost time (s)	10.0
Intersection Capacity Utilization	60.1%	ICU Level of Service	B
Analysis Period (min)	15		
c Critical Lane Group			

Movement	SEL	SET	SER	NWL	NWT	NWR	NEL	NET	NER	SWL	SWT	SWR
Lane Configurations												
Volume (vph)	0	698	0	0	358	23	18	28	15	66	0	73
Ideal Flow (vphpl)	1900	1900	1900	1900	1900	1900	1900	1900	1900	1900	1900	1900
Total Lost time (s)		5.0			5.0			5.0			5.0	
Lane Util. Factor		0.95			0.95			1.00			1.00	
Frpb, ped/bikes		1.00			0.96			0.92			0.82	
Flpb, ped/bikes		1.00			1.00			0.93			0.86	
Frt		1.00			0.99			0.97			0.93	
Flt Protected		1.00			1.00			0.99			0.98	
Satd. Flow (prot)		3539			3368			1518			1203	
Flt Permitted		1.00			1.00			0.89			0.82	
Satd. Flow (perm)		3539			3368			1377			1009	
Peak-hour factor, PHF	0.93	0.93	0.93	0.86	0.86	0.86	0.69	0.69	0.69	0.87	0.87	0.87
Adj. Flow (vph)	0	751	0	0	416	27	26	41	22	76	0	84
RTOR Reduction (vph)	0	0	0	0	5	0	0	13	0	0	44	0
Lane Group Flow (vph)	0	751	0	0	438	0	0	76	0	0	116	0
Confl. Peds. (#/hr)						430	270		291	291		270
Turn Type							Perm			Perm		
Protected Phases		6			2			4			8	
Permitted Phases							4			8		
Actuated Green, G (s)		55.0			55.0			25.0			25.0	
Effective Green, g (s)		55.0			55.0			25.0			25.0	
Actuated g/C Ratio		0.61			0.61			0.28			0.28	
Clearance Time (s)		5.0			5.0			5.0			5.0	
Lane Grp Cap (vph)		2163			2058			383			280	
v/s Ratio Prot		c0.21			0.13							
v/s Ratio Perm								0.06			c0.11	
v/c Ratio		0.35			0.21			0.20			0.41	
Uniform Delay, d1		8.6			7.8			24.8			26.5	
Progression Factor		0.28			0.03			0.87			0.77	
Incremental Delay, d2		0.4			0.2			1.1			3.8	
Delay (s)		2.8			0.5			22.8			24.1	
Level of Service		A			A			C			C	
Approach Delay (s)		2.8			0.5			22.8			24.1	
Approach LOS		A			A			C			C	

Intersection Summary			
HCM Average Control Delay	5.7	HCM Level of Service	A
HCM Volume to Capacity ratio	0.37		
Actuated Cycle Length (s)	90.0	Sum of lost time (s)	10.0
Intersection Capacity Utilization	45.4%	ICU Level of Service	A
Analysis Period (min)	15		
c Critical Lane Group			

Movement	SEL	SET	SER	NWL	NWT	NWR	NEL	NET	NER	SWL	SWT	SWR
Lane Configurations												
Volume (vph)	0	710	0	0	411	20	21	38	14	64	0	42
Ideal Flow (vphpl)	1900	1900	1900	1900	1900	1900	1900	1900	1900	1900	1900	1900
Total Lost time (s)		5.0			5.0			5.0			5.0	
Lane Util. Factor		0.95			0.95			1.00			1.00	
Frpb, ped/bikes		1.00			0.97			0.94			0.87	
Flpb, ped/bikes		1.00			1.00			0.93			0.83	
Frt		1.00			0.99			0.97			0.95	
Flt Protected		1.00			1.00			0.99			0.97	
Satd. Flow (prot)		3539			3415			1557			1236	
Flt Permitted		1.00			1.00			0.91			0.78	
Satd. Flow (perm)		3539			3415			1433			1000	
Peak-hour factor, PHF	0.89	0.89	0.89	0.87	0.87	0.87	0.83	0.83	0.83	0.79	0.79	0.79
Adj. Flow (vph)	0	798	0	0	472	23	25	46	17	81	0	53
RTOR Reduction (vph)	0	0	0	0	4	0	0	11	0	0	30	0
Lane Group Flow (vph)	0	798	0	0	491	0	0	77	0	0	104	0
Confl. Peds. (#/hr)						404	307		254	254		307
Turn Type							Perm			Perm		
Protected Phases		6			2			4			8	
Permitted Phases							4			8		
Actuated Green, G (s)		45.0			45.0			25.0			25.0	
Effective Green, g (s)		45.0			45.0			25.0			25.0	
Actuated g/C Ratio		0.56			0.56			0.31			0.31	
Clearance Time (s)		5.0			5.0			5.0			5.0	
Lane Grp Cap (vph)		1991			1921			448			313	
v/s Ratio Prot		c0.23			0.14							
v/s Ratio Perm								0.05			c0.10	
v/c Ratio		0.40			0.26			0.17			0.33	
Uniform Delay, d1		9.9			8.9			20.0			21.1	
Progression Factor		0.41			0.07			0.82			0.78	
Incremental Delay, d2		0.6			0.3			0.8			2.5	
Delay (s)		4.6			1.0			17.3			19.0	
Level of Service		A			A			B			B	
Approach Delay (s)		4.6			1.0			17.3			19.0	
Approach LOS		A			A			B			B	

Intersection Summary			
HCM Average Control Delay	5.5	HCM Level of Service	A
HCM Volume to Capacity ratio	0.38		
Actuated Cycle Length (s)	80.0	Sum of lost time (s)	10.0
Intersection Capacity Utilization	43.3%	ICU Level of Service	A
Analysis Period (min)	15		
c Critical Lane Group			

Movement	SEL	SET	NWT	NWR	SWL	SWR
Lane Configurations						
Volume (vph)	130	629	385	63	0	0
Ideal Flow (vphpl)	1900	1900	1900	1900	1900	1900
Total Lost time (s)		5.0	5.0			
Lane Util. Factor		0.95	0.95			
Frpb, ped/bikes		1.00	0.91			
Flpb, ped/bikes		0.97	1.00			
Frt		1.00	0.98			
Flt Protected		0.99	1.00			
Satd. Flow (prot)		3399	3140			
Flt Permitted		0.72	1.00			
Satd. Flow (perm)		2481	3140			
Peak-hour factor, PHF	0.91	0.91	0.93	0.93	0.92	0.92
Adj. Flow (vph)	143	691	414	68	0	0
RTOR Reduction (vph)	0	0	0	0	0	0
Lane Group Flow (vph)	0	834	482	0	0	0
Confl. Peds. (#/hr)	456			456		
Turn Type	pm+pt					
Protected Phases	1	6	2			
Permitted Phases	6					
Actuated Green, G (s)		60.0	45.0			
Effective Green, g (s)		60.0	45.0			
Actuated g/C Ratio		0.67	0.50			
Clearance Time (s)		5.0	5.0			
Lane Grp Cap (vph)		1756	1570			
v/s Ratio Prot		c0.05	0.15			
v/s Ratio Perm		c0.26				
v/c Ratio		0.47	0.31			
Uniform Delay, d1		7.3	13.3			
Progression Factor		0.84	0.72			
Incremental Delay, d2		0.9	0.5			
Delay (s)		7.0	10.1			
Level of Service		A	B			
Approach Delay (s)		7.0	10.1		0.0	
Approach LOS		A	B		A	

Intersection Summary			
HCM Average Control Delay	8.1	HCM Level of Service	A
HCM Volume to Capacity ratio	0.47		
Actuated Cycle Length (s)	90.0	Sum of lost time (s)	30.0
Intersection Capacity Utilization	43.5%	ICU Level of Service	A
Analysis Period (min)	15		
c Critical Lane Group			

Movement	SEL	SET	NWT	NWR	SWL	SWR
Lane Configurations						
Volume (vph)	118	670	431	101	0	0
Ideal Flow (vphpl)	1900	1900	1900	1900	1900	1900
Total Lost time (s)		5.0	5.0			
Lane Util. Factor		0.95	0.95			
Frpb, ped/bikes		1.00	0.88			
Flpb, ped/bikes		0.98	1.00			
Frt		1.00	0.97			
Flt Protected		0.99	1.00			
Satd. Flow (prot)		3444	3030			
Flt Permitted		0.70	1.00			
Satd. Flow (perm)		2421	3030			
Peak-hour factor, PHF	0.94	0.94	0.90	0.90	0.92	0.92
Adj. Flow (vph)	126	713	479	112	0	0
RTOR Reduction (vph)	0	0	25	0	0	0
Lane Group Flow (vph)	0	839	566	0	0	0
Confl. Peds. (#/hr)	440			440		
Turn Type	pm+pt					
Protected Phases	1	6	2			
Permitted Phases	6					
Actuated Green, G (s)		45.0	35.0			
Effective Green, g (s)		45.0	35.0			
Actuated g/C Ratio		0.56	0.44			
Clearance Time (s)		5.0	5.0			
Lane Grp Cap (vph)		1426	1326			
v/s Ratio Prot		c0.04	0.19			
v/s Ratio Perm		c0.29				
v/c Ratio		0.59	0.43			
Uniform Delay, d1		11.4	15.6			
Progression Factor		0.69	0.62			
Incremental Delay, d2		1.7	1.0			
Delay (s)		9.6	10.7			
Level of Service		A	B			
Approach Delay (s)		9.6	10.7		0.0	
Approach LOS		A	B		A	

Intersection Summary			
HCM Average Control Delay	10.0	HCM Level of Service	B
HCM Volume to Capacity ratio	0.58		
Actuated Cycle Length (s)	80.0	Sum of lost time (s)	35.0
Intersection Capacity Utilization	47.2%	ICU Level of Service	A
Analysis Period (min)	15		
c Critical Lane Group			

Movement	SEL	SET	SER	NWL	NWT	NWR	NEL	NET	NER	SWL	SWT	SWR
Lane Configurations												
Volume (vph)	0	645	20	6	392	0	0	0	0	39	13	60
Ideal Flow (vphpl)	1900	1900	1900	1900	1900	1900	1900	1900	1900	1900	1900	1900
Total Lost time (s)		5.0			5.0						5.0	5.0
Lane Util. Factor		0.95			0.95						1.00	1.00
Frpb, ped/bikes		0.98			1.00						1.00	0.68
Flpb, ped/bikes		1.00			1.00						0.76	1.00
Frt		1.00			1.00						1.00	0.85
Flt Protected		1.00			1.00						0.96	1.00
Satd. Flow (prot)		3449			3524						1367	1071
Flt Permitted		1.00			0.95						0.96	1.00
Satd. Flow (perm)		3449			3333						1367	1071
Peak-hour factor, PHF	0.90	0.90	0.90	0.91	0.91	0.91	0.92	0.92	0.92	0.82	0.82	0.82
Adj. Flow (vph)	0	717	22	7	431	0	0	0	0	48	16	73
RTOR Reduction (vph)	0	2	0	0	0	0	0	0	0	0	0	57
Lane Group Flow (vph)	0	737	0	0	438	0	0	0	0	0	64	16
Confl. Peds. (#/hr)			542	542						232		230
Turn Type				Perm						Perm		Perm
Protected Phases		6			2						8	
Permitted Phases				2						8		8
Actuated Green, G (s)		60.0			60.0						20.0	20.0
Effective Green, g (s)		60.0			60.0						20.0	20.0
Actuated g/C Ratio		0.67			0.67						0.22	0.22
Clearance Time (s)		5.0			5.0						5.0	5.0
Lane Grp Cap (vph)		2299			2222						304	238
v/s Ratio Prot		c0.21										
v/s Ratio Perm					0.13						0.05	0.02
v/c Ratio		0.32			0.20						0.21	0.07
Uniform Delay, d1		6.4			5.8						28.6	27.6
Progression Factor		0.30			0.38						0.99	1.39
Incremental Delay, d2		0.3			0.2						1.2	0.4
Delay (s)		2.3			2.4						29.4	38.9
Level of Service		A			A						C	D
Approach Delay (s)		2.3			2.4			0.0			34.4	
Approach LOS		A			A			A			C	

Intersection Summary			
HCM Average Control Delay	5.7	HCM Level of Service	A
HCM Volume to Capacity ratio	0.29		
Actuated Cycle Length (s)	90.0	Sum of lost time (s)	10.0
Intersection Capacity Utilization	40.4%	ICU Level of Service	A
Analysis Period (min)	15		
c Critical Lane Group			

Movement	SEL	SET	SER	NWL	NWT	NWR	NEL	NET	NER	SWL	SWT	SWR
Lane Configurations												
Volume (vph)	0	651	19	4	471	0	0	0	0	55	14	61
Ideal Flow (vphpl)	1900	1900	1900	1900	1900	1900	1900	1900	1900	1900	1900	1900
Total Lost time (s)		5.0			5.0						5.0	5.0
Lane Util. Factor		0.95			0.95						1.00	1.00
Frpb, ped/bikes		1.00			1.00						1.00	0.75
Flpb, ped/bikes		1.00			1.00						0.74	1.00
Frt		1.00			1.00						1.00	0.85
Flt Protected		1.00			1.00						0.96	1.00
Satd. Flow (prot)		3524			3538						1332	1187
Flt Permitted		1.00			0.95						0.96	1.00
Satd. Flow (perm)		3524			3367						1332	1187
Peak-hour factor, PHF	0.94	0.94	0.94	0.90	0.90	0.90	0.92	0.92	0.92	0.86	0.86	0.86
Adj. Flow (vph)	0	693	20	4	523	0	0	0	0	64	16	71
RTOR Reduction (vph)	0	3	0	0	0	0	0	0	0	0	0	53
Lane Group Flow (vph)	0	710	0	0	527	0	0	0	0	0	80	18
Confl. Peds. (#/hr)										267		162
Turn Type				Perm						Perm		Perm
Protected Phases		6			2						8	
Permitted Phases				2						8		8
Actuated Green, G (s)		50.0			50.0						20.0	20.0
Effective Green, g (s)		50.0			50.0						20.0	20.0
Actuated g/C Ratio		0.62			0.62						0.25	0.25
Clearance Time (s)		5.0			5.0						5.0	5.0
Lane Grp Cap (vph)		2203			2104						333	297
v/s Ratio Prot		c0.20										
v/s Ratio Perm					0.16						0.06	0.01
v/c Ratio		0.32			0.25						0.24	0.06
Uniform Delay, d1		7.0			6.7						23.9	22.8
Progression Factor		0.08			0.38						1.04	1.31
Incremental Delay, d2		0.3			0.3						1.5	0.3
Delay (s)		0.9			2.8						26.3	30.2
Level of Service		A			A						C	C
Approach Delay (s)		0.9			2.8			0.0			28.2	
Approach LOS		A			A			A			C	

Intersection Summary			
HCM Average Control Delay	4.6	HCM Level of Service	A
HCM Volume to Capacity ratio	0.30		
Actuated Cycle Length (s)	80.0	Sum of lost time (s)	10.0
Intersection Capacity Utilization	40.3%	ICU Level of Service	A
Analysis Period (min)	15		
c Critical Lane Group			

HCM Signalized Intersection Capacity Analysis
24: Kuhio & Kanekapolei St.

9/23/2011

Movement	SEL	SET	SER	NWL	NWT	NWR	NEL	NET	NER	SWL	SWT	SWR
Lane Configurations												
Volume (vph)	103	696	55	19	287	11	84	185	0	72	72	26
Ideal Flow (vphpl)	1900	1900	1900	1900	1900	1900	1900	1900	1900	1900	1900	1900
Total Lost time (s)	5.0	5.0			5.0			5.0			5.0	
Lane Util. Factor	1.00	0.95			0.95			0.95			0.95	
Frpb, ped/bikes	1.00	0.95			0.99			1.00			0.94	
Flpb, ped/bikes	0.93	1.00			0.99			0.91			0.93	
Frt	1.00	0.99			0.99			1.00			0.98	
Flt Protected	0.95	1.00			1.00			0.98			0.98	
Satd. Flow (prot)	1651	3337			3430			3179			2979	
Flt Permitted	0.46	1.00			0.88			0.79			0.72	
Satd. Flow (perm)	805	3337			3034			2543			2190	
Peak-hour factor, PHF	0.87	0.87	0.87	0.87	0.87	0.87	0.80	0.80	0.80	0.92	0.92	0.92
Adj. Flow (vph)	118	800	63	22	330	13	105	231	0	78	78	28
RTOR Reduction (vph)	0	7	0	0	3	0	0	0	0	0	16	0
Lane Group Flow (vph)	118	856	0	0	362	0	0	336	0	0	168	0
Confl. Peds. (#/hr)	218		415	415		218	363			160		363
Turn Type	pm+pt			Perm			Perm			Perm		
Protected Phases	1	6			2			4			8	
Permitted Phases	6			2			4			8		
Actuated Green, G (s)	50.0	50.0			40.0			30.0			30.0	
Effective Green, g (s)	50.0	50.0			40.0			30.0			30.0	
Actuated g/C Ratio	0.56	0.56			0.44			0.33			0.33	
Clearance Time (s)	5.0	5.0			5.0			5.0			5.0	
Lane Grp Cap (vph)	494	1854			1348			848			730	
v/s Ratio Prot	0.01	c0.26										
v/s Ratio Perm	0.12				0.12			c0.13			0.08	
v/c Ratio	0.24	0.46			0.27			0.40			0.23	
Uniform Delay, d1	9.8	12.0			15.8			23.0			21.7	
Progression Factor	0.82	0.71			1.00			1.00			0.60	
Incremental Delay, d2	1.1	0.8			0.5			1.4			0.6	
Delay (s)	9.1	9.3			16.3			24.4			13.6	
Level of Service	A	A			B			C			B	
Approach Delay (s)		9.2			16.3			24.4			13.6	
Approach LOS		A			B			C			B	

Intersection Summary			
HCM Average Control Delay	13.8	HCM Level of Service	B
HCM Volume to Capacity ratio	0.44		
Actuated Cycle Length (s)	90.0	Sum of lost time (s)	10.0
Intersection Capacity Utilization	72.6%	ICU Level of Service	C
Analysis Period (min)	15		
c Critical Lane Group			

Movement	SEL	SET	SER	NWL	NWT	NWR	NEL	NET	NER	SWL	SWT	SWR
Lane Configurations												
Volume (vph)	95	542	69	32	335	15	109	229	0	69	61	31
Ideal Flow (vphpl)	1900	1900	1900	1900	1900	1900	1900	1900	1900	1900	1900	1900
Total Lost time (s)	5.0	5.0			5.0			5.0			5.0	
Lane Util. Factor	1.00	0.95			0.95			0.95			0.95	
Frpb, ped/bikes	1.00	0.93			0.98			1.00			0.93	
Flpb, ped/bikes	0.93	1.00			0.98			0.91			0.92	
Frt	1.00	0.98			0.99			1.00			0.97	
Flt Protected	0.95	1.00			1.00			0.98			0.98	
Satd. Flow (prot)	1651	3219			3373			3186			2899	
Flt Permitted	0.41	1.00			0.87			0.78			0.71	
Satd. Flow (perm)	721	3219			2931			2525			2104	
Peak-hour factor, PHF	0.93	0.93	0.93	0.94	0.94	0.94	0.88	0.88	0.88	0.84	0.84	0.84
Adj. Flow (vph)	102	583	74	34	356	16	124	260	0	82	73	37
RTOR Reduction (vph)	0	12	0	0	4	0	0	0	0	0	23	0
Lane Group Flow (vph)	102	645	0	0	402	0	0	384	0	0	169	0
Confl. Peds. (#/hr)	491		514	514		491	351			258		351
Turn Type	pm+pt			Perm			Perm			Perm		
Protected Phases	1	6			2			4			8	
Permitted Phases	6			2			4			8		
Actuated Green, G (s)	40.0	40.0			30.0			30.0			30.0	
Effective Green, g (s)	40.0	40.0			30.0			30.0			30.0	
Actuated g/C Ratio	0.50	0.50			0.38			0.38			0.38	
Clearance Time (s)	5.0	5.0			5.0			5.0			5.0	
Lane Grp Cap (vph)	419	1610			1099			947			789	
v/s Ratio Prot	0.02	c0.20										
v/s Ratio Perm	0.11				0.14			c0.15			0.08	
v/c Ratio	0.24	0.40			0.37			0.41			0.21	
Uniform Delay, d1	11.0	12.5			18.1			18.4			17.0	
Progression Factor	1.33	1.20			1.00			1.00			0.46	
Incremental Delay, d2	1.3	0.7			0.9			1.3			0.5	
Delay (s)	16.0	15.7			19.1			19.7			8.3	
Level of Service	B	B			B			B			A	
Approach Delay (s)		15.7			19.1			19.7			8.3	
Approach LOS		B			B			B			A	

Intersection Summary			
HCM Average Control Delay	16.6	HCM Level of Service	B
HCM Volume to Capacity ratio	0.40		
Actuated Cycle Length (s)	80.0	Sum of lost time (s)	10.0
Intersection Capacity Utilization	71.1%	ICU Level of Service	C
Analysis Period (min)	15		
c Critical Lane Group			

Movement	SET	SER	NWL	NWT	NEL	NER
Lane Configurations						
Volume (vph)	0	0	201	1821	399	0
Ideal Flow (vphpl)	1900	1900	1900	1900	1900	1900
Total Lost time (s)				5.0	5.0	
Lane Util. Factor				0.91	0.97	
Frpb, ped/bikes				1.00	1.00	
Flpb, ped/bikes				0.98	1.00	
Frt				1.00	1.00	
Flt Protected				1.00	0.95	
Satd. Flow (prot)				4951	3433	
Flt Permitted				1.00	0.95	
Satd. Flow (perm)				4951	3433	
Peak-hour factor, PHF	0.92	0.92	0.94	0.94	0.88	0.88
Adj. Flow (vph)	0	0	214	1937	453	0
RTOR Reduction (vph)	0	0	0	0	0	0
Lane Group Flow (vph)	0	0	0	2151	453	0
Confl. Peds. (#/hr)			77			
Turn Type			Perm			
Protected Phases				2	4	
Permitted Phases			2			
Actuated Green, G (s)				55.0	25.0	
Effective Green, g (s)				55.0	25.0	
Actuated g/C Ratio				0.61	0.28	
Clearance Time (s)				5.0	5.0	
Lane Grp Cap (vph)				3026	954	
v/s Ratio Prot					c0.13	
v/s Ratio Perm				0.43		
v/c Ratio				0.71	0.47	
Uniform Delay, d1				12.0	27.0	
Progression Factor				0.77	1.00	
Incremental Delay, d2				1.2	1.7	
Delay (s)				10.5	28.7	
Level of Service				B	C	
Approach Delay (s)	0.0			10.5	28.7	
Approach LOS	A			B	C	

Intersection Summary			
HCM Average Control Delay	13.7	HCM Level of Service	B
HCM Volume to Capacity ratio	0.64		
Actuated Cycle Length (s)	90.0	Sum of lost time (s)	10.0
Intersection Capacity Utilization	59.0%	ICU Level of Service	B
Analysis Period (min)	15		
c Critical Lane Group			

Movement	SET	SER	NWL	NWT	NEL	NER
Lane Configurations						
Volume (vph)	0	0	194	1684	284	0
Ideal Flow (vphpl)	1900	1900	1900	1900	1900	1900
Total Lost time (s)				5.0	5.0	
Lane Util. Factor				0.91	0.97	
Frpb, ped/bikes				1.00	1.00	
Flpb, ped/bikes				0.98	1.00	
Frt				1.00	1.00	
Flt Protected				0.99	0.95	
Satd. Flow (prot)				4978	3433	
Flt Permitted				0.99	0.95	
Satd. Flow (perm)				4978	3433	
Peak-hour factor, PHF	0.92	0.92	0.91	0.91	0.72	0.72
Adj. Flow (vph)	0	0	213	1851	394	0
RTOR Reduction (vph)	0	0	0	0	0	0
Lane Group Flow (vph)	0	0	0	2064	394	0
Confl. Peds. (#/hr)			62			
Turn Type			Perm			
Protected Phases				2	4	
Permitted Phases			2			
Actuated Green, G (s)				50.0	20.0	
Effective Green, g (s)				50.0	20.0	
Actuated g/C Ratio				0.62	0.25	
Clearance Time (s)				5.0	5.0	
Lane Grp Cap (vph)				3111	858	
v/s Ratio Prot					c0.11	
v/s Ratio Perm				0.41		
v/c Ratio				0.66	0.46	
Uniform Delay, d1				9.6	25.4	
Progression Factor				0.74	1.00	
Incremental Delay, d2				1.0	1.8	
Delay (s)				8.1	27.2	
Level of Service				A	C	
Approach Delay (s)	0.0			8.1	27.2	
Approach LOS	A			A	C	

Intersection Summary			
HCM Average Control Delay	11.2	HCM Level of Service	B
HCM Volume to Capacity ratio	0.61		
Actuated Cycle Length (s)	80.0	Sum of lost time (s)	10.0
Intersection Capacity Utilization	52.9%	ICU Level of Service	A
Analysis Period (min)	15		
c Critical Lane Group			

Movement	SET	SER	NWL	NWT	NEL	NER
Lane Configurations						
Volume (veh/h)	0	0	157	1986	53	0
Sign Control	Free			Free	Stop	
Grade	0%			0%	0%	
Peak Hour Factor	0.92	0.92	0.95	0.95	0.65	0.65
Hourly flow rate (vph)	0	0	165	2091	82	0
Pedestrians					77	
Lane Width (ft)					12.0	
Walking Speed (ft/s)					4.0	
Percent Blockage					6	
Right turn flare (veh)						
Median type	None			None		
Median storage veh)						
Upstream signal (ft)	321			924		
pX, platoon unblocked					0.81	
vC, conflicting volume			77		1104	77
vC1, stage 1 conf vol						
vC2, stage 2 conf vol						
vCu, unblocked vol			77		306	77
tC, single (s)			4.1		*5.8	6.9
tC, 2 stage (s)						
tF (s)			2.2		*2.5	3.3
p0 queue free %			88		88	100
cM capacity (veh/h)			1422		654	906

Direction, Lane #	NW 1	NW 2	NW 3	NE 1
Volume Total	583	836	836	82
Volume Left	165	0	0	82
Volume Right	0	0	0	0
cSH	1422	1700	1700	654
Volume to Capacity	0.12	0.49	0.49	0.12
Queue Length 95th (ft)	10	0	0	11
Control Delay (s)	3.1	0.0	0.0	11.3
Lane LOS	A			B
Approach Delay (s)	0.8			11.3
Approach LOS				B

Intersection Summary			
Average Delay	1.2		
Intersection Capacity Utilization	51.6%	ICU Level of Service	A
Analysis Period (min)	15		

* User Entered Value

Movement	SET	SER	NWL	NWT	NEL	NER
Lane Configurations						
Volume (veh/h)	0	0	151	1824	54	0
Sign Control	Free			Free	Stop	
Grade	0%			0%	0%	
Peak Hour Factor	0.92	0.92	0.93	0.93	0.65	0.65
Hourly flow rate (vph)	0	0	162	1961	83	0
Pedestrians					60	
Lane Width (ft)					12.0	
Walking Speed (ft/s)					4.0	
Percent Blockage					5	
Right turn flare (veh)						
Median type	None			None		
Median storage veh)						
Upstream signal (ft)	321			924		
pX, platoon unblocked					0.87	
vC, conflicting volume			60		1038	60
vC1, stage 1 conf vol						
vC2, stage 2 conf vol						
vCu, unblocked vol			60		513	60
tC, single (s)			4.1		*5.8	6.9
tC, 2 stage (s)						
tF (s)			2.2		*2.5	3.3
p0 queue free %			89		85	100
cM capacity (veh/h)			1465		549	943

Direction, Lane #	NW 1	NW 2	NW 3	NE 1
Volume Total	555	785	785	83
Volume Left	162	0	0	83
Volume Right	0	0	0	0
cSH	1465	1700	1700	549
Volume to Capacity	0.11	0.46	0.46	0.15
Queue Length 95th (ft)	9	0	0	13
Control Delay (s)	3.1	0.0	0.0	12.7
Lane LOS	A			B
Approach Delay (s)	0.8			12.7
Approach LOS				B

Intersection Summary			
Average Delay	1.2		
Intersection Capacity Utilization	48.3%	ICU Level of Service	A
Analysis Period (min)	15		

* User Entered Value

Movement	SET	SER	NWL	NWT	NEL	NER
Lane Configurations				↑↑↑	↰	
Volume (veh/h)	0	0	0	1917	208	0
Sign Control	Free			Free	Stop	
Grade	0%			0%	0%	
Peak Hour Factor	0.92	0.92	0.93	0.93	0.75	0.75
Hourly flow rate (vph)	0	0	0	2061	277	0
Pedestrians						
Lane Width (ft)						
Walking Speed (ft/s)						
Percent Blockage						
Right turn flare (veh)						
Median type	None			None		
Median storage veh)						
Upstream signal (ft)	640			605		
pX, platoon unblocked					0.77	
vC, conflicting volume			0		687	0
vC1, stage 1 conf vol						
vC2, stage 2 conf vol						
vCu, unblocked vol			0		0	0
tC, single (s)			4.1		*5.8	6.9
tC, 2 stage (s)						
tF (s)			2.2		*2.5	3.3
p0 queue free %			100		75	100
cM capacity (veh/h)			1622		1114	1084

Direction, Lane #	NW 1	NW 2	NW 3	NE 1
Volume Total	687	687	687	277
Volume Left	0	0	0	277
Volume Right	0	0	0	0
cSH	1700	1700	1700	1114
Volume to Capacity	0.40	0.40	0.40	0.25
Queue Length 95th (ft)	0	0	0	25
Control Delay (s)	0.0	0.0	0.0	9.3
Lane LOS				A
Approach Delay (s)	0.0			9.3
Approach LOS				A

Intersection Summary			
Average Delay	1.1		
Intersection Capacity Utilization	55.2%	ICU Level of Service	B
Analysis Period (min)	15		

* User Entered Value

Movement	SET	SER	NWL	NWT	NEL	NER
Lane Configurations				↑↑↑	↰	
Volume (veh/h)	0	0	0	1806	169	0
Sign Control	Free			Free	Stop	
Grade	0%			0%	0%	
Peak Hour Factor	0.92	0.92	0.94	0.94	0.89	0.89
Hourly flow rate (vph)	0	0	0	1921	190	0
Pedestrians						
Lane Width (ft)						
Walking Speed (ft/s)						
Percent Blockage						
Right turn flare (veh)						
Median type	None			None		
Median storage veh)						
Upstream signal (ft)	640			605		
pX, platoon unblocked					0.84	
vC, conflicting volume			0		640	0
vC1, stage 1 conf vol						
vC2, stage 2 conf vol						
vCu, unblocked vol			0		0	0
tC, single (s)			4.1		*5.8	6.9
tC, 2 stage (s)						
tF (s)			2.2		*2.5	3.3
p0 queue free %			100		84	100
cM capacity (veh/h)			1622		1203	1084

Direction, Lane #	NW 1	NW 2	NW 3	NE 1
Volume Total	640	640	640	190
Volume Left	0	0	0	190
Volume Right	0	0	0	0
cSH	1700	1700	1700	1203
Volume to Capacity	0.38	0.38	0.38	0.16
Queue Length 95th (ft)	0	0	0	14
Control Delay (s)	0.0	0.0	0.0	8.6
Lane LOS				A
Approach Delay (s)	0.0			8.6
Approach LOS				A

Intersection Summary			
Average Delay	0.8		
Intersection Capacity Utilization	50.9%	ICU Level of Service	A
Analysis Period (min)	15		

* User Entered Value

Movement	SET	SER	NWL	NWT	NEL	NER
Lane Configurations						
Volume (vph)	0	0	168	1802	346	0
Ideal Flow (vphpl)	1900	1900	1900	1900	1900	1900
Total Lost time (s)				5.0	5.0	
Lane Util. Factor				0.91	0.97	
Frpb, ped/bikes				1.00	1.00	
Flpb, ped/bikes				0.99	1.00	
Frt				1.00	1.00	
Flt Protected				1.00	0.95	
Satd. Flow (prot)				5011	3433	
Flt Permitted				1.00	0.95	
Satd. Flow (perm)				5011	3433	
Peak-hour factor, PHF	0.92	0.92	0.97	0.97	0.85	0.85
Adj. Flow (vph)	0	0	173	1858	407	0
RTOR Reduction (vph)	0	0	0	0	0	0
Lane Group Flow (vph)	0	0	0	2031	407	0
Confl. Peds. (#/hr)			73			
Turn Type			Perm			
Protected Phases				2	4	
Permitted Phases			2			
Actuated Green, G (s)				55.0	25.0	
Effective Green, g (s)				55.0	25.0	
Actuated g/C Ratio				0.61	0.28	
Clearance Time (s)				5.0	5.0	
Lane Grp Cap (vph)				3062	954	
v/s Ratio Prot					c0.12	
v/s Ratio Perm				0.41		
v/c Ratio				0.66	0.43	
Uniform Delay, d1				11.4	26.6	
Progression Factor				1.00	0.63	
Incremental Delay, d2				1.1	1.4	
Delay (s)				12.6	18.1	
Level of Service				B	B	
Approach Delay (s)	0.0			12.6	18.1	
Approach LOS	A			B	B	

Intersection Summary			
HCM Average Control Delay	13.5	HCM Level of Service	B
HCM Volume to Capacity ratio	0.59		
Actuated Cycle Length (s)	90.0	Sum of lost time (s)	10.0
Intersection Capacity Utilization	56.4%	ICU Level of Service	B
Analysis Period (min)	15		
c Critical Lane Group			

Movement	SET	SER	NWL	NWT	NEL	NER
Lane Configurations						
Volume (vph)	0	0	163	1555	378	0
Ideal Flow (vphpl)	1900	1900	1900	1900	1900	1900
Total Lost time (s)				5.0	5.0	
Lane Util. Factor				0.91	0.97	
Frpb, ped/bikes				1.00	1.00	
Flpb, ped/bikes				0.99	1.00	
Frt				1.00	1.00	
Flt Protected				1.00	0.95	
Satd. Flow (prot)				4992	3433	
Flt Permitted				1.00	0.95	
Satd. Flow (perm)				4992	3433	
Peak-hour factor, PHF	0.92	0.92	0.95	0.95	0.89	0.89
Adj. Flow (vph)	0	0	172	1637	425	0
RTOR Reduction (vph)	0	0	0	0	0	0
Lane Group Flow (vph)	0	0	0	1809	425	0
Confl. Peds. (#/hr)			96			
Turn Type			Perm			
Protected Phases				2	4	
Permitted Phases			2			
Actuated Green, G (s)				50.0	20.0	
Effective Green, g (s)				50.0	20.0	
Actuated g/C Ratio				0.62	0.25	
Clearance Time (s)				5.0	5.0	
Lane Grp Cap (vph)				3120	858	
v/s Ratio Prot					c0.12	
v/s Ratio Perm				0.36		
v/c Ratio				0.58	0.50	
Uniform Delay, d1				8.8	25.7	
Progression Factor				1.00	0.68	
Incremental Delay, d2				0.8	2.0	
Delay (s)				9.6	19.4	
Level of Service				A	B	
Approach Delay (s)	0.0			9.6	19.4	
Approach LOS	A			A	B	

Intersection Summary			
HCM Average Control Delay	11.5	HCM Level of Service	B
HCM Volume to Capacity ratio	0.56		
Actuated Cycle Length (s)	80.0	Sum of lost time (s)	10.0
Intersection Capacity Utilization	52.5%	ICU Level of Service	A
Analysis Period (min)	15		
c Critical Lane Group			

APPENDIX E

CAPACITY ANALYSIS CALCULATIONS
PROJECTED YEAR 2015 PEAK HOUR TRAFFIC
ANALYSIS WITH PROJECT

HCM Signalized Intersection Capacity Analysis
19: Kalakaua Ave. & Seaside Ave.

10/12/2011

Movement	SEL	SET	NWT	NWR	SWL	SWR
Lane Configurations						
Volume (vph)	212	1520	0	0	0	0
Ideal Flow (vphpl)	1900	1900	1900	1900	1900	1900
Total Lost time (s)	5.0	5.0				
Lane Util. Factor	0.81	0.81				
Frt	1.00	1.00				
Flt Protected	0.95	1.00				
Satd. Flow (prot)	1433	6031				
Flt Permitted	0.95	1.00				
Satd. Flow (perm)	1433	6031				
Peak-hour factor, PHF	0.94	0.94	0.92	0.92	0.92	0.92
Adj. Flow (vph)	226	1617	0	0	0	0
RTOR Reduction (vph)	0	0	0	0	0	0
Lane Group Flow (vph)	203	1640	0	0	0	0
Turn Type	Perm					
Protected Phases		4				
Permitted Phases	4					
Actuated Green, G (s)	55.0	55.0				
Effective Green, g (s)	55.0	55.0				
Actuated g/C Ratio	0.61	0.61				
Clearance Time (s)	5.0	5.0				
Lane Grp Cap (vph)	876	3686				
v/s Ratio Prot						
v/s Ratio Perm	0.14	0.27				
v/c Ratio	0.23	0.44				
Uniform Delay, d1	7.9	9.3				
Progression Factor	1.00	1.00				
Incremental Delay, d2	0.6	0.4				
Delay (s)	8.5	9.7				
Level of Service	A	A				
Approach Delay (s)		9.6	0.0		0.0	
Approach LOS		A	A		A	

Intersection Summary			
HCM Average Control Delay	9.6	HCM Level of Service	A
HCM Volume to Capacity ratio	0.44		
Actuated Cycle Length (s)	90.0	Sum of lost time (s)	35.0
Intersection Capacity Utilization	26.2%	ICU Level of Service	A
Analysis Period (min)	15		

c Critical Lane Group

HCM Signalized Intersection Capacity Analysis
19: Kalakaua Ave. & Seaside Ave.

10/12/2011

Movement	SEL	SET	NWT	NWR	SWL	SWR
Lane Configurations						
Volume (vph)	251	1617	0	0	0	0
Ideal Flow (vphpl)	1900	1900	1900	1900	1900	1900
Total Lost time (s)	5.0	5.0				
Lane Util. Factor	0.81	0.81				
Frt	1.00	1.00				
Flt Protected	0.95	1.00				
Satd. Flow (prot)	1433	6031				
Flt Permitted	0.95	1.00				
Satd. Flow (perm)	1433	6031				
Peak-hour factor, PHF	0.94	0.94	0.92	0.92	0.92	0.92
Adj. Flow (vph)	267	1720	0	0	0	0
RTOR Reduction (vph)	0	0	0	0	0	0
Lane Group Flow (vph)	240	1747	0	0	0	0
Turn Type	Perm					
Protected Phases		4				
Permitted Phases	4					
Actuated Green, G (s)	45.0	45.0				
Effective Green, g (s)	45.0	45.0				
Actuated g/C Ratio	0.56	0.56				
Clearance Time (s)	5.0	5.0				
Lane Grp Cap (vph)	806	3392				
v/s Ratio Prot						
v/s Ratio Perm	0.17	0.29				
v/c Ratio	0.30	0.52				
Uniform Delay, d1	9.2	10.8				
Progression Factor	1.00	1.00				
Incremental Delay, d2	0.9	0.6				
Delay (s)	10.1	11.3				
Level of Service	B	B				
Approach Delay (s)		11.2	0.0		0.0	
Approach LOS		B	A		A	

Intersection Summary			
HCM Average Control Delay	11.2	HCM Level of Service	B
HCM Volume to Capacity ratio	0.51		
Actuated Cycle Length (s)	80.0	Sum of lost time (s)	35.0
Intersection Capacity Utilization	27.6%	ICU Level of Service	A
Analysis Period (min)	15		

c Critical Lane Group

HCM Signalized Intersection Capacity Analysis
18: Kalakaua Ave. & Kaiulani Ave.

10/12/2011

Movement	SEL	SET	SER	NWL	NWT	NWR	NEL	NET	NER	SWL	SWT	SWR
Lane Configurations												
Volume (vph)	335	1180	38	0	0	0	0	24	14	0	0	0
Ideal Flow (vphpl)	1900	1900	1900	1900	1900	1900	1900	1900	1900	1900	1900	1900
Total Lost time (s)	5.0	5.0						5.0				
Lane Util. Factor	1.00	0.91						1.00				
Frpb, ped/bikes	1.00	0.97						0.86				
Flpb, ped/bikes	0.50	1.00						1.00				
Frt	1.00	1.00						0.95				
Flt Protected	0.95	1.00						1.00				
Satd. Flow (prot)	877	4919						1527				
Flt Permitted	0.95	1.00						1.00				
Satd. Flow (perm)	877	4919						1527				
Peak-hour factor, PHF	0.93	0.93	0.93	0.92	0.92	0.92	0.92	0.92	0.92	0.92	0.92	0.92
Adj. Flow (vph)	360	1269	41	0	0	0	0	26	15	0	0	0
RTOR Reduction (vph)	120	4	0	0	0	0	0	0	0	0	0	0
Lane Group Flow (vph)	240	1306	0	0	0	0	0	41	0	0	0	0
Confl. Peds. (#/hr)	783		1349						392			
Turn Type	Perm											
Protected Phases		6						4				
Permitted Phases	6											
Actuated Green, G (s)	60.0	60.0						20.0				
Effective Green, g (s)	60.0	60.0						20.0				
Actuated g/C Ratio	0.67	0.67						0.22				
Clearance Time (s)	5.0	5.0						5.0				
Lane Grp Cap (vph)	585	3279						339				
v/s Ratio Prot		0.27						c0.03				
v/s Ratio Perm	c0.27											
v/c Ratio	0.41	0.40						0.12				
Uniform Delay, d1	6.9	6.8						28.0				
Progression Factor	4.75	0.77						1.00				
Incremental Delay, d2	2.0	0.3						0.7				
Delay (s)	34.6	5.6						28.7				
Level of Service	C	A						C				
Approach Delay (s)		11.9			0.0			28.7			0.0	
Approach LOS		B			A			C			A	

Intersection Summary			
HCM Average Control Delay	12.3	HCM Level of Service	B
HCM Volume to Capacity ratio	0.34		
Actuated Cycle Length (s)	90.0	Sum of lost time (s)	10.0
Intersection Capacity Utilization	45.7%	ICU Level of Service	A
Analysis Period (min)	15		
c Critical Lane Group			

HCM Signalized Intersection Capacity Analysis
18: Kalakaua Ave. & Kaiulani Ave.

10/12/2011

Movement	SEL	SET	SER	NWL	NWT	NWR	NEL	NET	NER	SWL	SWT	SWR
Lane Configurations												
Volume (vph)	324	1161	41	0	0	0	0	28	13	0	0	0
Ideal Flow (vphpl)	1900	1900	1900	1900	1900	1900	1900	1900	1900	1900	1900	1900
Total Lost time (s)	5.0	5.0						5.0				
Lane Util. Factor	1.00	0.91						1.00				
Frpb, ped/bikes	1.00	0.97						0.89				
Flpb, ped/bikes	0.56	1.00						1.00				
Frt	1.00	0.99						0.96				
Flt Protected	0.95	1.00						1.00				
Satd. Flow (prot)	998	4902						1588				
Flt Permitted	0.95	1.00						1.00				
Satd. Flow (perm)	998	4902						1588				
Peak-hour factor, PHF	0.96	0.96	0.96	0.92	0.92	0.92	0.92	0.92	0.92	0.92	0.92	0.92
Adj. Flow (vph)	338	1209	43	0	0	0	0	30	14	0	0	0
RTOR Reduction (vph)	127	5	0	0	0	0	0	0	0	0	0	0
Lane Group Flow (vph)	211	1248	0	0	0	0	0	44	0	0	0	0
Confl. Peds. (#/hr)	653		1289						327			
Turn Type	Perm											
Protected Phases		6						4				
Permitted Phases	6											
Actuated Green, G (s)	50.0	50.0						20.0				
Effective Green, g (s)	50.0	50.0						20.0				
Actuated g/C Ratio	0.62	0.62						0.25				
Clearance Time (s)	5.0	5.0						5.0				
Lane Grp Cap (vph)	624	3064						397				
v/s Ratio Prot		c0.25						c0.03				
v/s Ratio Perm	0.21											
v/c Ratio	0.34	0.41						0.11				
Uniform Delay, d1	7.1	7.5						23.1				
Progression Factor	3.46	0.77						1.00				
Incremental Delay, d2	1.3	0.4						0.6				
Delay (s)	26.0	6.2						23.7				
Level of Service	C	A						C				
Approach Delay (s)		10.4			0.0			23.7			0.0	
Approach LOS		B			A			C			A	

Intersection Summary			
HCM Average Control Delay	10.7	HCM Level of Service	B
HCM Volume to Capacity ratio	0.32		
Actuated Cycle Length (s)	80.0	Sum of lost time (s)	10.0
Intersection Capacity Utilization	45.5%	ICU Level of Service	A
Analysis Period (min)	15		
c Critical Lane Group			

HCM Signalized Intersection Capacity Analysis
20: Kuhio Ave. & Seaside

10/12/2011

Movement	SEL	SET	SER	NWL	NWT	NWR	NEL	NET	NER	SWL	SWT	SWR
Lane Configurations												
Volume (vph)	88	543	0	0	389	50	45	246	84	0	0	0
Ideal Flow (vphpl)	1900	1900	1900	1900	1900	1900	1900	1900	1900	1900	1900	1900
Total Lost time (s)		5.0			5.0		5.0	5.0	5.0			
Lane Util. Factor		0.95			0.95		1.00	1.00	1.00			
Frpb, ped/bikes		1.00			0.96		1.00	1.00	0.64			
Flpb, ped/bikes		0.98			1.00		0.68	1.00	1.00			
Frt		1.00			0.98		1.00	1.00	0.85			
Flt Protected		0.99			1.00		0.95	1.00	1.00			
Satd. Flow (prot)		3459			3326		1195	1863	1014			
Flt Permitted		0.78			1.00		0.95	1.00	1.00			
Satd. Flow (perm)		2717			3326		1195	1863	1014			
Peak-hour factor, PHF	0.86	0.86	0.86	0.89	0.89	0.89	0.94	0.94	0.94	0.92	0.92	0.92
Adj. Flow (vph)	102	631	0	0	437	56	48	262	89	0	0	0
RTOR Reduction (vph)	0	0	0	0	11	0	0	0	64	0	0	0
Lane Group Flow (vph)	0	733	0	0	482	0	48	262	25	0	0	0
Confl. Peds. (#/hr)	425					425	251		339			
Turn Type	pm+pt						Perm		Perm			
Protected Phases	1	6			2			4				
Permitted Phases	6						4		4			
Actuated Green, G (s)		55.0			45.0		25.0	25.0	25.0			
Effective Green, g (s)		55.0			45.0		25.0	25.0	25.0			
Actuated g/C Ratio		0.61			0.50		0.28	0.28	0.28			
Clearance Time (s)		5.0			5.0		5.0	5.0	5.0			
Lane Grp Cap (vph)		1702			1663		332	518	282			
v/s Ratio Prot		c0.02			0.14			c0.14				
v/s Ratio Perm		c0.24					0.04		0.02			
v/c Ratio		0.43			0.29		0.14	0.51	0.09			
Uniform Delay, d1		9.2			13.2		24.5	27.3	24.1			
Progression Factor		1.00			0.55		0.86	0.89	1.30			
Incremental Delay, d2		0.8			0.4		0.9	3.5	0.6			
Delay (s)		10.0			7.6		22.1	27.7	31.8			
Level of Service		B			A		C	C	C			
Approach Delay (s)		10.0			7.6			28.0			0.0	
Approach LOS		B			A			C			A	

Intersection Summary			
HCM Average Control Delay	13.7	HCM Level of Service	B
HCM Volume to Capacity ratio	0.45		
Actuated Cycle Length (s)	90.0	Sum of lost time (s)	10.0
Intersection Capacity Utilization	56.8%	ICU Level of Service	B
Analysis Period (min)	15		
c Critical Lane Group			

HCM Signalized Intersection Capacity Analysis
20: Kuhio Ave. & Seaside

10/12/2011

Movement	SEL	SET	SER	NWL	NWT	NWR	NEL	NET	NER	SWL	SWT	SWR
Lane Configurations												
Volume (vph)	86	523	0	0	370	58	39	199	89	0	0	0
Ideal Flow (vphpl)	1900	1900	1900	1900	1900	1900	1900	1900	1900	1900	1900	1900
Total Lost time (s)		5.0			5.0		5.0	5.0	5.0			
Lane Util. Factor		0.95			0.95		1.00	1.00	1.00			
Frpb, ped/bikes		1.00			0.95		1.00	1.00	0.68			
Flpb, ped/bikes		0.99			1.00		0.68	1.00	1.00			
Frt		1.00			0.98		1.00	1.00	0.85			
Flt Protected		0.99			1.00		0.95	1.00	1.00			
Satd. Flow (prot)		3466			3299		1206	1863	1070			
Flt Permitted		0.78			1.00		0.95	1.00	1.00			
Satd. Flow (perm)		2725			3299		1206	1863	1070			
Peak-hour factor, PHF	0.94	0.94	0.94	0.82	0.82	0.82	0.87	0.87	0.87	0.92	0.92	0.92
Adj. Flow (vph)	91	556	0	0	451	71	45	229	102	0	0	0
RTOR Reduction (vph)	0	0	0	0	16	0	0	0	70	0	0	0
Lane Group Flow (vph)	0	647	0	0	506	0	45	229	32	0	0	0
Confl. Peds. (#/hr)	374					374	262		263			
Turn Type	pm+pt						Perm		Perm			
Protected Phases	1	6			2			4				
Permitted Phases	6						4		4			
Actuated Green, G (s)		45.0			35.0		25.0	25.0	25.0			
Effective Green, g (s)		45.0			35.0		25.0	25.0	25.0			
Actuated g/C Ratio		0.56			0.44		0.31	0.31	0.31			
Clearance Time (s)		5.0			5.0		5.0	5.0	5.0			
Lane Grp Cap (vph)		1579			1443		377	582	334			
v/s Ratio Prot		c0.03			0.15			c0.12				
v/s Ratio Perm		c0.20					0.04		0.03			
v/c Ratio		0.41			0.35		0.12	0.39	0.10			
Uniform Delay, d1		9.9			15.0		19.6	21.6	19.5			
Progression Factor		1.00			0.65		0.73	0.77	1.41			
Incremental Delay, d2		0.8			0.7		0.6	2.0	0.6			
Delay (s)		10.7			10.4		15.0	18.6	28.1			
Level of Service		B			B		B	B	C			
Approach Delay (s)		10.7			10.4			20.7			0.0	
Approach LOS		B			B			C			A	

Intersection Summary			
HCM Average Control Delay	13.1	HCM Level of Service	B
HCM Volume to Capacity ratio	0.40		
Actuated Cycle Length (s)	80.0	Sum of lost time (s)	10.0
Intersection Capacity Utilization	56.1%	ICU Level of Service	B
Analysis Period (min)	15		
c Critical Lane Group			

HCM Signalized Intersection Capacity Analysis
21: Kuhio & Nohonani

10/12/2011

Movement	SEL	SET	SER	NWL	NWT	NWR	NEL	NET	NER	SWL	SWT	SWR
Lane Configurations												
Volume (vph)	0	611	0	0	317	23	18	28	47	90	0	73
Ideal Flow (vphpl)	1900	1900	1900	1900	1900	1900	1900	1900	1900	1900	1900	1900
Total Lost time (s)		5.0			5.0			5.0			5.0	
Lane Util. Factor		0.95			0.95			1.00			1.00	
Frpb, ped/bikes		1.00			0.96			0.83			0.85	
Flpb, ped/bikes		1.00			1.00			0.96			0.86	
Frt		1.00			0.99			0.93			0.94	
Flt Protected		1.00			1.00			0.99			0.97	
Satd. Flow (prot)		3539			3348			1366			1249	
Flt Permitted		1.00			1.00			0.92			0.76	
Satd. Flow (perm)		3539			3348			1271			969	
Peak-hour factor, PHF	0.93	0.93	0.93	0.86	0.86	0.86	0.69	0.69	0.69	0.87	0.87	0.87
Adj. Flow (vph)	0	657	0	0	369	27	26	41	68	103	0	84
RTOR Reduction (vph)	0	0	0	0	6	0	0	40	0	0	33	0
Lane Group Flow (vph)	0	657	0	0	390	0	0	95	0	0	155	0
Confl. Peds. (#/hr)						430	270		291	291		270
Turn Type							Perm			Perm		
Protected Phases		6			2			4			8	
Permitted Phases							4			8		
Actuated Green, G (s)		55.0			55.0			25.0			25.0	
Effective Green, g (s)		55.0			55.0			25.0			25.0	
Actuated g/C Ratio		0.61			0.61			0.28			0.28	
Clearance Time (s)		5.0			5.0			5.0			5.0	
Lane Grp Cap (vph)		2163			2046			353			269	
v/s Ratio Prot		c0.19			0.12							
v/s Ratio Perm								0.07			c0.16	
v/c Ratio		0.30			0.19			0.27			0.57	
Uniform Delay, d1		8.4			7.7			25.4			27.9	
Progression Factor		0.33			0.03			0.91			0.79	
Incremental Delay, d2		0.3			0.2			1.8			7.3	
Delay (s)		3.1			0.4			24.9			29.3	
Level of Service		A			A			C			C	
Approach Delay (s)		3.1			0.4			24.9			29.3	
Approach LOS		A			A			C			C	

Intersection Summary			
HCM Average Control Delay	8.0	HCM Level of Service	A
HCM Volume to Capacity ratio	0.39		
Actuated Cycle Length (s)	90.0	Sum of lost time (s)	10.0
Intersection Capacity Utilization	45.1%	ICU Level of Service	A
Analysis Period (min)	15		
c Critical Lane Group			

HCM Signalized Intersection Capacity Analysis
21: Kuhio & Nohonani

10/12/2011

Movement	SEL	SET	SER	NWL	NWT	NWR	NEL	NET	NER	SWL	SWT	SWR
Lane Configurations												
Volume (vph)	0	612	0	0	365	20	21	38	51	92	0	42
Ideal Flow (vphpl)	1900	1900	1900	1900	1900	1900	1900	1900	1900	1900	1900	1900
Total Lost time (s)		5.0			5.0			5.0			5.0	
Lane Util. Factor		0.95			0.95			1.00			1.00	
Frpb, ped/bikes		1.00			0.97			0.85			0.89	
Flpb, ped/bikes		1.00			1.00			0.96			0.83	
Frt		1.00			0.99			0.94			0.96	
Flt Protected		1.00			1.00			0.99			0.97	
Satd. Flow (prot)		3539			3400			1409			1286	
Flt Permitted		1.00			1.00			0.93			0.74	
Satd. Flow (perm)		3539			3400			1322			979	
Peak-hour factor, PHF	0.89	0.89	0.89	0.87	0.87	0.87	0.83	0.83	0.83	0.79	0.79	0.79
Adj. Flow (vph)	0	688	0	0	420	23	25	46	61	116	0	53
RTOR Reduction (vph)	0	0	0	0	5	0	0	39	0	0	21	0
Lane Group Flow (vph)	0	688	0	0	438	0	0	94	0	0	148	0
Confl. Peds. (#/hr)						404	307		254	254		307
Turn Type							Perm			Perm		
Protected Phases		6			2			4			8	
Permitted Phases							4			8		
Actuated Green, G (s)		45.0			45.0			25.0			25.0	
Effective Green, g (s)		45.0			45.0			25.0			25.0	
Actuated g/C Ratio		0.56			0.56			0.31			0.31	
Clearance Time (s)		5.0			5.0			5.0			5.0	
Lane Grp Cap (vph)		1991			1913			413			306	
v/s Ratio Prot		c0.19			0.13							
v/s Ratio Perm								0.07			c0.15	
v/c Ratio		0.35			0.23			0.23			0.48	
Uniform Delay, d1		9.5			8.8			20.3			22.3	
Progression Factor		0.47			0.12			0.85			0.80	
Incremental Delay, d2		0.5			0.3			1.3			4.7	
Delay (s)		4.9			1.3			18.5			22.6	
Level of Service		A			A			B			C	
Approach Delay (s)		4.9			1.3			18.5			22.6	
Approach LOS		A			A			B			C	

Intersection Summary			
HCM Average Control Delay	7.2	HCM Level of Service	A
HCM Volume to Capacity ratio	0.40		
Actuated Cycle Length (s)	80.0	Sum of lost time (s)	10.0
Intersection Capacity Utilization	42.3%	ICU Level of Service	A
Analysis Period (min)	15		
c Critical Lane Group			

HCM Signalized Intersection Capacity Analysis
29: Kuhio & Nahua St.

10/12/2011

Movement	SEL	SET	NWT	NWR	SWL	SWR
Lane Configurations						
Volume (vph)	130	536	344	90	0	0
Ideal Flow (vphpl)	1900	1900	1900	1900	1900	1900
Total Lost time (s)		5.0	5.0			
Lane Util. Factor		0.95	0.95			
Frpb, ped/bikes		1.00	0.86			
Flpb, ped/bikes		0.96	1.00			
Frt		1.00	0.97			
Flt Protected		0.99	1.00			
Satd. Flow (prot)		3377	2956			
Flt Permitted		0.72	1.00			
Satd. Flow (perm)		2441	2956			
Peak-hour factor, PHF	0.91	0.91	0.93	0.93	0.92	0.92
Adj. Flow (vph)	143	589	370	97	0	0
RTOR Reduction (vph)	0	0	0	0	0	0
Lane Group Flow (vph)	0	732	467	0	0	0
Confl. Peds. (#/hr)	456			456		
Turn Type	pm+pt					
Protected Phases	1	6	2			
Permitted Phases	6					
Actuated Green, G (s)		60.0	45.0			
Effective Green, g (s)		60.0	45.0			
Actuated g/C Ratio		0.67	0.50			
Clearance Time (s)		5.0	5.0			
Lane Grp Cap (vph)		1731	1478			
v/s Ratio Prot		c0.05	0.16			
v/s Ratio Perm		c0.23				
v/c Ratio		0.42	0.32			
Uniform Delay, d1		7.0	13.4			
Progression Factor		0.78	0.64			
Incremental Delay, d2		0.7	0.6			
Delay (s)		6.2	9.0			
Level of Service		A	A			
Approach Delay (s)		6.2	9.0		0.0	
Approach LOS		A	A		A	

Intersection Summary			
HCM Average Control Delay	7.3	HCM Level of Service	A
HCM Volume to Capacity ratio	0.42		
Actuated Cycle Length (s)	90.0	Sum of lost time (s)	30.0
Intersection Capacity Utilization	41.3%	ICU Level of Service	A
Analysis Period (min)	15		
c Critical Lane Group			

HCM Signalized Intersection Capacity Analysis
29: Kuhio & Nahua St.

10/12/2011

Movement	SEL	SET	NWT	NWR	SWL	SWR
Lane Configurations						
Volume (vph)	118	565	385	132	0	0
Ideal Flow (vphpl)	1900	1900	1900	1900	1900	1900
Total Lost time (s)		5.0	5.0			
Lane Util. Factor		0.95	0.95			
Frpb, ped/bikes		1.00	0.84			
Flpb, ped/bikes		0.98	1.00			
Frt		1.00	0.96			
Flt Protected		0.99	1.00			
Satd. Flow (prot)		3427	2857			
Flt Permitted		0.69	1.00			
Satd. Flow (perm)		2385	2857			
Peak-hour factor, PHF	0.94	0.94	0.90	0.90	0.92	0.92
Adj. Flow (vph)	126	601	428	147	0	0
RTOR Reduction (vph)	0	0	42	0	0	0
Lane Group Flow (vph)	0	727	533	0	0	0
Confl. Peds. (#/hr)	440			440		
Turn Type	pm+pt					
Protected Phases	1	6	2			
Permitted Phases	6					
Actuated Green, G (s)		45.0	35.0			
Effective Green, g (s)		45.0	35.0			
Actuated g/C Ratio		0.56	0.44			
Clearance Time (s)		5.0	5.0			
Lane Grp Cap (vph)		1407	1250			
v/s Ratio Prot		c0.03	0.19			
v/s Ratio Perm		c0.26				
v/c Ratio		0.52	0.43			
Uniform Delay, d1		10.8	15.6			
Progression Factor		0.69	0.53			
Incremental Delay, d2		1.3	1.0			
Delay (s)		8.8	9.3			
Level of Service		A	A			
Approach Delay (s)		8.8	9.3		0.0	
Approach LOS		A	A		A	

Intersection Summary			
HCM Average Control Delay	9.0	HCM Level of Service	A
HCM Volume to Capacity ratio	0.51		
Actuated Cycle Length (s)	80.0	Sum of lost time (s)	35.0
Intersection Capacity Utilization	44.7%	ICU Level of Service	A
Analysis Period (min)	15		
c Critical Lane Group			

HCM Signalized Intersection Capacity Analysis
23: Kuhio & Walina St.

10/12/2011

Movement	SEL	SET	SER	NWL	NWT	NWR	NEL	NET	NER	SWL	SWT	SWR
Lane Configurations												
Volume (vph)	0	569	65	30	392	0	34	0	137	35	105	60
Ideal Flow (vphpl)	1900	1900	1900	1900	1900	1900	1900	1900	1900	1900	1900	1900
Total Lost time (s)		5.0	5.0		5.0		5.0		5.0		5.0	5.0
Lane Util. Factor		0.95	1.00		0.95		1.00		1.00		1.00	1.00
Frpb, ped/bikes		1.00	0.29		1.00		1.00		1.00		1.00	0.68
Flpb, ped/bikes		1.00	1.00		0.98		1.00		1.00		0.92	1.00
Frt		1.00	0.85		1.00		1.00		0.85		1.00	0.85
Flt Protected		1.00	1.00		1.00		0.95		1.00		0.99	1.00
Satd. Flow (prot)		3539	458		3460		1770		1583		1692	1071
Flt Permitted		1.00	1.00		0.88		0.60		1.00		0.99	1.00
Satd. Flow (perm)		3539	458		3065		1121		1583		1692	1071
Peak-hour factor, PHF	0.90	0.90	0.90	0.91	0.91	0.91	0.92	0.92	0.92	0.82	0.82	0.82
Adj. Flow (vph)	0	632	72	33	431	0	37	0	149	43	128	73
RTOR Reduction (vph)	0	0	25	0	0	0	0	0	17	0	0	53
Lane Group Flow (vph)	0	632	47	0	464	0	37	0	132	0	171	20
Confl. Peds. (#/hr)			542	542						232		230
Turn Type			Perm	Perm			custom		custom	Perm		Perm
Protected Phases		6			2						8	
Permitted Phases			6	2			4		4	8		8
Actuated Green, G (s)		55.0	55.0		55.0		25.0		25.0		25.0	25.0
Effective Green, g (s)		55.0	55.0		55.0		25.0		25.0		25.0	25.0
Actuated g/C Ratio		0.61	0.61		0.61		0.28		0.28		0.28	0.28
Clearance Time (s)		5.0	5.0		5.0		5.0		5.0		5.0	5.0
Lane Grp Cap (vph)		2163	280		1873		311		440		470	298
v/s Ratio Prot		c0.18										
v/s Ratio Perm			0.10		0.15		0.03		0.08		0.10	0.02
v/c Ratio		0.29	0.17		0.25		0.12		0.30		0.36	0.07
Uniform Delay, d1		8.3	7.6		8.0		24.3		25.6		26.1	23.9
Progression Factor		0.36	0.51		0.70		1.00		1.00		0.96	1.35
Incremental Delay, d2		0.3	1.2		0.3		0.8		1.7		1.7	0.3
Delay (s)		3.4	5.0		5.9		25.1		27.3		26.7	32.6
Level of Service		A	A		A		C		C		C	C
Approach Delay (s)		3.5			5.9			26.9			28.5	
Approach LOS		A			A			C			C	

Intersection Summary			
HCM Average Control Delay	10.7	HCM Level of Service	B
HCM Volume to Capacity ratio	0.31		
Actuated Cycle Length (s)	90.0	Sum of lost time (s)	10.0
Intersection Capacity Utilization	54.1%	ICU Level of Service	A
Analysis Period (min)	15		
c Critical Lane Group			

HCM Signalized Intersection Capacity Analysis
23: Kuhio & Walina St.

10/12/2011

Movement	SEL	SET	SER	NWL	NWT	NWR	NEL	NET	NER	SWL	SWT	SWR
Lane Configurations												
Volume (vph)	0	562	75	35	416	0	40	0	159	55	119	61
Ideal Flow (vphpl)	1900	1900	1900	1900	1900	1900	1900	1900	1900	1900	1900	1900
Total Lost time (s)		5.0	5.0		5.0		5.0		5.0		5.0	5.0
Lane Util. Factor		0.95	1.00		0.95		1.00		1.00		1.00	1.00
Frpb, ped/bikes		1.00	1.00		1.00		1.00		1.00		1.00	0.75
Flpb, ped/bikes		1.00	1.00		1.00		1.00		1.00		0.90	1.00
Frt		1.00	0.85		1.00		1.00		0.85		1.00	0.85
Flt Protected		1.00	1.00		1.00		0.95		1.00		0.98	1.00
Satd. Flow (prot)		3539	1583		3525		1770		1583		1648	1187
Flt Permitted		1.00	1.00		0.88		0.58		1.00		0.98	1.00
Satd. Flow (perm)		3539	1583		3105		1084		1583		1648	1187
Peak-hour factor, PHF	0.94	0.94	0.94	0.90	0.90	0.90	0.92	0.92	0.92	0.86	0.86	0.86
Adj. Flow (vph)	0	598	80	39	462	0	43	0	173	64	138	71
RTOR Reduction (vph)	0	0	35	0	0	0	0	0	119	0	0	49
Lane Group Flow (vph)	0	598	45	0	501	0	43	0	54	0	202	22
Confl. Peds. (#/hr)										267		162
Turn Type			Perm	Perm			custom		custom	Perm		Perm
Protected Phases		6			2						8	
Permitted Phases			6	2			4		4	8		8
Actuated Green, G (s)		45.0	45.0		45.0		25.0		25.0		25.0	25.0
Effective Green, g (s)		45.0	45.0		45.0		25.0		25.0		25.0	25.0
Actuated g/C Ratio		0.56	0.56		0.56		0.31		0.31		0.31	0.31
Clearance Time (s)		5.0	5.0		5.0		5.0		5.0		5.0	5.0
Lane Grp Cap (vph)		1991	890		1747		339		495		515	371
v/s Ratio Prot		c0.17										
v/s Ratio Perm			0.03		0.16		0.04		0.03		0.12	0.02
v/c Ratio		0.30	0.05		0.29		0.13		0.11		0.39	0.06
Uniform Delay, d1		9.2	7.9		9.1		19.7		19.6		21.5	19.3
Progression Factor		0.18	0.09		0.62		1.00		1.00		1.01	1.06
Incremental Delay, d2		0.3	0.1		0.4		0.8		0.4		2.2	0.3
Delay (s)		2.0	0.8		6.0		20.5		20.0		24.0	20.8
Level of Service		A	A		A		C		C		C	C
Approach Delay (s)		1.8			6.0			20.1			23.2	
Approach LOS		A			A			C			C	

Intersection Summary			
HCM Average Control Delay	9.0	HCM Level of Service	A
HCM Volume to Capacity ratio	0.33		
Actuated Cycle Length (s)	80.0	Sum of lost time (s)	10.0
Intersection Capacity Utilization	56.5%	ICU Level of Service	B
Analysis Period (min)	15		
c Critical Lane Group			

HCM Signalized Intersection Capacity Analysis
24: Kuhio & Kanekapolei St.

10/12/2011

Movement	SEL	SET	SER	NWL	NWT	NWR	NEL	NET	NER	SWL	SWT	SWR
Lane Configurations												
Volume (vph)	109	751	55	19	271	11	81	168	0	72	72	26
Ideal Flow (vphpl)	1900	1900	1900	1900	1900	1900	1900	1900	1900	1900	1900	1900
Total Lost time (s)	5.0	5.0			5.0			5.0			5.0	
Lane Util. Factor	1.00	0.95			0.95			0.95			0.95	
Frpb, ped/bikes	1.00	0.96			0.99			1.00			0.94	
Flpb, ped/bikes	0.93	1.00			0.99			0.91			0.93	
Frt	1.00	0.99			0.99			1.00			0.98	
Flt Protected	0.95	1.00			1.00			0.98			0.98	
Satd. Flow (prot)	1643	3350			3427			3165			2967	
Flt Permitted	0.48	1.00			0.87			0.79			0.73	
Satd. Flow (perm)	823	3350			3003			2526			2204	
Peak-hour factor, PHF	0.87	0.87	0.87	0.87	0.87	0.87	0.80	0.80	0.80	0.92	0.92	0.92
Adj. Flow (vph)	125	863	63	22	311	13	101	210	0	78	78	28
RTOR Reduction (vph)	0	6	0	0	3	0	0	0	0	0	16	0
Lane Group Flow (vph)	125	920	0	0	343	0	0	311	0	0	168	0
Confl. Peds. (#/hr)	218		415	415		218	363			160		363
Turn Type	pm+pt			Perm			Perm			Perm		
Protected Phases	1	6			2			4			8	
Permitted Phases	6			2			4			8		
Actuated Green, G (s)	50.0	50.0			40.0			30.0			30.0	
Effective Green, g (s)	50.0	50.0			40.0			30.0			30.0	
Actuated g/C Ratio	0.56	0.56			0.44			0.33			0.33	
Clearance Time (s)	5.0	5.0			5.0			5.0			5.0	
Lane Grp Cap (vph)	503	1861			1335			842			735	
v/s Ratio Prot	0.01	c0.27										
v/s Ratio Perm	0.12				0.11			c0.12			0.08	
v/c Ratio	0.25	0.49			0.26			0.37			0.23	
Uniform Delay, d1	9.8	12.3			15.7			22.8			21.6	
Progression Factor	0.75	0.70			1.00			1.00			0.59	
Incremental Delay, d2	1.2	0.9			0.5			1.2			0.6	
Delay (s)	8.5	9.5			16.1			24.1			13.3	
Level of Service	A	A			B			C			B	
Approach Delay (s)		9.4			16.1			24.1			13.3	
Approach LOS		A			B			C			B	

Intersection Summary			
HCM Average Control Delay	13.4	HCM Level of Service	B
HCM Volume to Capacity ratio	0.45		
Actuated Cycle Length (s)	90.0	Sum of lost time (s)	10.0
Intersection Capacity Utilization	73.5%	ICU Level of Service	D
Analysis Period (min)	15		
c Critical Lane Group			

HCM Signalized Intersection Capacity Analysis
24: Kuhio & Kanekapolei St.

10/12/2011

Movement	SEL	SET	SER	NWL	NWT	NWR	NEL	NET	NER	SWL	SWT	SWR
Lane Configurations												
Volume (vph)	102	605	69	32	319	15	101	211	0	69	61	31
Ideal Flow (vphpl)	1900	1900	1900	1900	1900	1900	1900	1900	1900	1900	1900	1900
Total Lost time (s)	5.0	5.0			5.0			5.0			5.0	
Lane Util. Factor	1.00	0.95			0.95			0.95			0.95	
Frpb, ped/bikes	1.00	0.93			0.98			1.00			0.93	
Flpb, ped/bikes	0.93	1.00			0.98			0.91			0.92	
Frt	1.00	0.98			0.99			1.00			0.97	
Flt Protected	0.95	1.00			1.00			0.98			0.98	
Satd. Flow (prot)	1643	3249			3373			3184			2884	
Flt Permitted	0.43	1.00			0.85			0.78			0.72	
Satd. Flow (perm)	737	3249			2893			2531			2117	
Peak-hour factor, PHF	0.93	0.93	0.93	0.94	0.94	0.94	0.88	0.88	0.88	0.84	0.84	0.84
Adj. Flow (vph)	110	651	74	34	339	16	115	240	0	82	73	37
RTOR Reduction (vph)	0	11	0	0	4	0	0	0	0	0	23	0
Lane Group Flow (vph)	110	714	0	0	385	0	0	355	0	0	169	0
Confl. Peds. (#/hr)	491		514	514		491	351			258		351
Turn Type	pm+pt			Perm			Perm			Perm		
Protected Phases	1	6			2			4			8	
Permitted Phases	6			2			4			8		
Actuated Green, G (s)	40.0	40.0			30.0			30.0			30.0	
Effective Green, g (s)	40.0	40.0			30.0			30.0			30.0	
Actuated g/C Ratio	0.50	0.50			0.38			0.38			0.38	
Clearance Time (s)	5.0	5.0			5.0			5.0			5.0	
Lane Grp Cap (vph)	425	1625			1085			949			794	
v/s Ratio Prot	0.02	c0.22										
v/s Ratio Perm	0.11				0.13			c0.14			0.08	
v/c Ratio	0.26	0.44			0.36			0.37			0.21	
Uniform Delay, d1	11.0	12.8			18.0			18.2			17.0	
Progression Factor	1.01	0.90			1.00			1.00			0.45	
Incremental Delay, d2	1.4	0.8			0.9			1.1			0.5	
Delay (s)	12.6	12.3			18.9			19.3			8.1	
Level of Service	B	B			B			B			A	
Approach Delay (s)		12.4			18.9			19.3			8.1	
Approach LOS		B			B			B			A	

Intersection Summary			
HCM Average Control Delay	14.7	HCM Level of Service	B
HCM Volume to Capacity ratio	0.41		
Actuated Cycle Length (s)	80.0	Sum of lost time (s)	10.0
Intersection Capacity Utilization	72.0%	ICU Level of Service	C
Analysis Period (min)	15		
c Critical Lane Group			

HCM Signalized Intersection Capacity Analysis
32: Ala Wai Blvd. & Seaside

10/12/2011

Movement	SET	SER	NWL	NWT	NEL	NER
Lane Configurations						
Volume (vph)	0	0	201	1771	399	0
Ideal Flow (vphpl)	1900	1900	1900	1900	1900	1900
Total Lost time (s)				5.0	5.0	
Lane Util. Factor				0.91	0.97	
Frpb, ped/bikes				1.00	1.00	
Flpb, ped/bikes				0.98	1.00	
Frt				1.00	1.00	
Flt Protected				0.99	0.95	
Satd. Flow (prot)				4948	3433	
Flt Permitted				0.99	0.95	
Satd. Flow (perm)				4948	3433	
Peak-hour factor, PHF	0.92	0.92	0.94	0.94	0.88	0.88
Adj. Flow (vph)	0	0	214	1884	453	0
RTOR Reduction (vph)	0	0	0	0	0	0
Lane Group Flow (vph)	0	0	0	2098	453	0
Confl. Peds. (#/hr)			77			
Turn Type			Perm			
Protected Phases				2	4	
Permitted Phases			2			
Actuated Green, G (s)				55.0	25.0	
Effective Green, g (s)				55.0	25.0	
Actuated g/C Ratio				0.61	0.28	
Clearance Time (s)				5.0	5.0	
Lane Grp Cap (vph)				3024	954	
v/s Ratio Prot					c0.13	
v/s Ratio Perm				0.42		
v/c Ratio				0.69	0.47	
Uniform Delay, d1				11.8	27.0	
Progression Factor				0.80	1.00	
Incremental Delay, d2				1.2	1.7	
Delay (s)				10.7	28.7	
Level of Service				B	C	
Approach Delay (s)	0.0			10.7	28.7	
Approach LOS	A			B	C	

Intersection Summary			
HCM Average Control Delay	13.9	HCM Level of Service	B
HCM Volume to Capacity ratio	0.63		
Actuated Cycle Length (s)	90.0	Sum of lost time (s)	10.0
Intersection Capacity Utilization	58.0%	ICU Level of Service	B
Analysis Period (min)	15		
c Critical Lane Group			

HCM Signalized Intersection Capacity Analysis
32: Ala Wai Blvd. & Seaside

10/12/2011

Movement	SET	SER	NWL	NWT	NEL	NER
Lane Configurations						
Volume (vph)	0	0	194	1628	284	0
Ideal Flow (vphpl)	1900	1900	1900	1900	1900	1900
Total Lost time (s)				5.0	5.0	
Lane Util. Factor				0.91	0.97	
Frpb, ped/bikes				1.00	1.00	
Flpb, ped/bikes				0.98	1.00	
Frt				1.00	1.00	
Flt Protected				0.99	0.95	
Satd. Flow (prot)				4975	3433	
Flt Permitted				0.99	0.95	
Satd. Flow (perm)				4975	3433	
Peak-hour factor, PHF	0.92	0.92	0.91	0.91	0.72	0.72
Adj. Flow (vph)	0	0	213	1789	394	0
RTOR Reduction (vph)	0	0	0	0	0	0
Lane Group Flow (vph)	0	0	0	2002	394	0
Confl. Peds. (#/hr)			62			
Turn Type			Perm			
Protected Phases				2	4	
Permitted Phases			2			
Actuated Green, G (s)				50.0	20.0	
Effective Green, g (s)				50.0	20.0	
Actuated g/C Ratio				0.62	0.25	
Clearance Time (s)				5.0	5.0	
Lane Grp Cap (vph)				3109	858	
v/s Ratio Prot					c0.11	
v/s Ratio Perm				0.40		
v/c Ratio				0.64	0.46	
Uniform Delay, d1				9.4	25.4	
Progression Factor				0.77	1.00	
Incremental Delay, d2				0.9	1.8	
Delay (s)				8.2	27.2	
Level of Service				A	C	
Approach Delay (s)	0.0			8.2	27.2	
Approach LOS	A			A	C	

Intersection Summary			
HCM Average Control Delay	11.3	HCM Level of Service	B
HCM Volume to Capacity ratio	0.59		
Actuated Cycle Length (s)	80.0	Sum of lost time (s)	10.0
Intersection Capacity Utilization	51.8%	ICU Level of Service	A
Analysis Period (min)	15		
c Critical Lane Group			

HCM Unsignalized Intersection Capacity Analysis
31: Ala Wai & Nohonani

10/12/2011

Movement	SET	SER	NWL	NWT	NEL	NER
Lane Configurations						
Volume (veh/h)	0	0	181	1936	53	0
Sign Control	Free			Free	Stop	
Grade	0%			0%	0%	
Peak Hour Factor	0.92	0.92	0.95	0.95	0.65	0.65
Hourly flow rate (vph)	0	0	191	2038	82	0
Pedestrians					77	
Lane Width (ft)					12.0	
Walking Speed (ft/s)					4.0	
Percent Blockage					6	
Right turn flare (veh)						
Median type	None			None		
Median storage veh)						
Upstream signal (ft)	321			924		
pX, platoon unblocked					0.82	
vC, conflicting volume			77		1137	77
vC1, stage 1 conf vol						
vC2, stage 2 conf vol						
vCu, unblocked vol			77		383	77
tC, single (s)			4.1		*5.8	6.9
tC, 2 stage (s)						
tF (s)			2.2		*2.5	3.3
p0 queue free %			87		86	100
cM capacity (veh/h)			1422		586	906

Direction, Lane #	NW 1	NW 2	NW 3	NE 1
Volume Total	598	815	815	82
Volume Left	191	0	0	82
Volume Right	0	0	0	0
cSH	1422	1700	1700	586
Volume to Capacity	0.13	0.48	0.48	0.14
Queue Length 95th (ft)	12	0	0	12
Control Delay (s)	3.5	0.0	0.0	12.1
Lane LOS	A			B
Approach Delay (s)	0.9			12.1
Approach LOS				B

Intersection Summary			
Average Delay	1.3		
Intersection Capacity Utilization	51.1%	ICU Level of Service	A
Analysis Period (min)	15		

* User Entered Value

HCM Unsignalized Intersection Capacity Analysis
31: Ala Wai & Nohonani

10/12/2011

Movement	SET	SER	NWL	NWT	NEL	NER
Lane Configurations						
Volume (veh/h)	0	0	179	1768	54	0
Sign Control	Free			Free	Stop	
Grade	0%			0%	0%	
Peak Hour Factor	0.92	0.92	0.93	0.93	0.65	0.65
Hourly flow rate (vph)	0	0	192	1901	83	0
Pedestrians					60	
Lane Width (ft)					12.0	
Walking Speed (ft/s)					4.0	
Percent Blockage					5	
Right turn flare (veh)						
Median type	None			None		
Median storage veh)						
Upstream signal (ft)	321			924		
pX, platoon unblocked					0.87	
vC, conflicting volume			60		1079	60
vC1, stage 1 conf vol						
vC2, stage 2 conf vol						
vCu, unblocked vol			60		582	60
tC, single (s)			4.1		*5.8	6.9
tC, 2 stage (s)						
tF (s)			2.2		*2.5	3.3
p0 queue free %			87		83	100
cM capacity (veh/h)			1465		494	943

Direction, Lane #	NW 1	NW 2	NW 3	NE 1
Volume Total	573	760	760	83
Volume Left	192	0	0	83
Volume Right	0	0	0	0
cSH	1465	1700	1700	494
Volume to Capacity	0.13	0.45	0.45	0.17
Queue Length 95th (ft)	11	0	0	15
Control Delay (s)	3.5	0.0	0.0	13.8
Lane LOS	A			B
Approach Delay (s)	1.0			13.8
Approach LOS				B

Intersection Summary			
Average Delay	1.4		
Intersection Capacity Utilization	47.8%	ICU Level of Service	A
Analysis Period (min)	15		

* User Entered Value

HCM Unsignalized Intersection Capacity Analysis
30: Ala Wai & Nahua St.

10/12/2011

Movement	SET	SER	NWL	NWT	NEL	NER
Lane Configurations				↑↑↑	↰	
Volume (veh/h)	0	0	0	1864	235	0
Sign Control	Free			Free	Stop	
Grade	0%			0%	0%	
Peak Hour Factor	0.92	0.92	0.93	0.93	0.75	0.75
Hourly flow rate (vph)	0	0	0	2004	313	0
Pedestrians						
Lane Width (ft)						
Walking Speed (ft/s)						
Percent Blockage						
Right turn flare (veh)						
Median type	None			None		
Median storage veh)						
Upstream signal (ft)	640			605		
pX, platoon unblocked					0.77	
vC, conflicting volume			0		668	0
vC1, stage 1 conf vol						
vC2, stage 2 conf vol						
vCu, unblocked vol			0		0	0
tC, single (s)			4.1		*5.8	6.9
tC, 2 stage (s)						
tF (s)			2.2		*2.5	3.3
p0 queue free %			100		72	100
cM capacity (veh/h)			1622		1114	1084

Direction, Lane #	NW 1	NW 2	NW 3	NE 1
Volume Total	668	668	668	313
Volume Left	0	0	0	313
Volume Right	0	0	0	0
cSH	1700	1700	1700	1114
Volume to Capacity	0.39	0.39	0.39	0.28
Queue Length 95th (ft)	0	0	0	29
Control Delay (s)	0.0	0.0	0.0	9.5
Lane LOS				A
Approach Delay (s)	0.0			9.5
Approach LOS				A

Intersection Summary			
Average Delay	1.3		
Intersection Capacity Utilization	55.7%	ICU Level of Service	B
Analysis Period (min)	15		

* User Entered Value

HCM Unsignalized Intersection Capacity Analysis
30: Ala Wai & Nahua St.

10/12/2011

Movement	SET	SER	NWL	NWT	NEL	NER
Lane Configurations				↑↑↑	↰	
Volume (veh/h)	0	0	0	1747	199	0
Sign Control	Free			Free	Stop	
Grade	0%			0%	0%	
Peak Hour Factor	0.92	0.92	0.94	0.94	0.89	0.89
Hourly flow rate (vph)	0	0	0	1859	224	0
Pedestrians						
Lane Width (ft)						
Walking Speed (ft/s)						
Percent Blockage						
Right turn flare (veh)						
Median type	None			None		
Median storage veh)						
Upstream signal (ft)	640			605		
pX, platoon unblocked					0.84	
vC, conflicting volume			0		620	0
vC1, stage 1 conf vol						
vC2, stage 2 conf vol						
vCu, unblocked vol			0		0	0
tC, single (s)			4.1		*5.8	6.9
tC, 2 stage (s)						
tF (s)			2.2		*2.5	3.3
p0 queue free %			100		81	100
cM capacity (veh/h)			1622		1204	1084

Direction, Lane #	NW 1	NW 2	NW 3	NE 1
Volume Total	620	620	620	224
Volume Left	0	0	0	224
Volume Right	0	0	0	0
cSH	1700	1700	1700	1204
Volume to Capacity	0.36	0.36	0.36	0.19
Queue Length 95th (ft)	0	0	0	17
Control Delay (s)	0.0	0.0	0.0	8.7
Lane LOS				A
Approach Delay (s)	0.0			8.7
Approach LOS				A

Intersection Summary			
Average Delay	0.9		
Intersection Capacity Utilization	51.4%	ICU Level of Service	A
Analysis Period (min)	15		

* User Entered Value

HCM Signalized Intersection Capacity Analysis
27: Ala Wai & Kanekapolei St.

10/12/2011

Movement	SET	SER	NWL	NWT	NEL	NER
Lane Configurations						
Volume (vph)	0	0	168	1852	335	0
Ideal Flow (vphpl)	1900	1900	1900	1900	1900	1900
Total Lost time (s)				5.0	5.0	
Lane Util. Factor				0.91	0.97	
Frpb, ped/bikes				1.00	1.00	
Flpb, ped/bikes				0.99	1.00	
Frt				1.00	1.00	
Flt Protected				1.00	0.95	
Satd. Flow (prot)				5012	3433	
Flt Permitted				1.00	0.95	
Satd. Flow (perm)				5012	3433	
Peak-hour factor, PHF	0.92	0.92	0.97	0.97	0.85	0.85
Adj. Flow (vph)	0	0	173	1909	394	0
RTOR Reduction (vph)	0	0	0	0	0	0
Lane Group Flow (vph)	0	0	0	2082	394	0
Confl. Peds. (#/hr)			73			
Turn Type			Perm			
Protected Phases				2	4	
Permitted Phases			2			
Actuated Green, G (s)				55.0	25.0	
Effective Green, g (s)				55.0	25.0	
Actuated g/C Ratio				0.61	0.28	
Clearance Time (s)				5.0	5.0	
Lane Grp Cap (vph)				3063	954	
v/s Ratio Prot					c0.11	
v/s Ratio Perm				0.42		
v/c Ratio				0.68	0.41	
Uniform Delay, d1				11.6	26.5	
Progression Factor				1.00	0.72	
Incremental Delay, d2				1.2	1.3	
Delay (s)				12.9	20.3	
Level of Service				B	C	
Approach Delay (s)	0.0			12.9	20.3	
Approach LOS	A			B	C	

Intersection Summary			
HCM Average Control Delay	14.1	HCM Level of Service	B
HCM Volume to Capacity ratio	0.60		
Actuated Cycle Length (s)	90.0	Sum of lost time (s)	10.0
Intersection Capacity Utilization	57.1%	ICU Level of Service	B
Analysis Period (min)	15		
c Critical Lane Group			

HCM Signalized Intersection Capacity Analysis
27: Ala Wai & Kanekapolei St.

10/12/2011

Movement	SET	SER	NWL	NWT	NEL	NER
Lane Configurations						
Volume (vph)	0	0	163	1612	367	0
Ideal Flow (vphpl)	1900	1900	1900	1900	1900	1900
Total Lost time (s)				5.0	5.0	
Lane Util. Factor				0.91	0.97	
Frpb, ped/bikes				1.00	1.00	
Flpb, ped/bikes				0.99	1.00	
Frt				1.00	1.00	
Flt Protected				1.00	0.95	
Satd. Flow (prot)				4995	3433	
Flt Permitted				1.00	0.95	
Satd. Flow (perm)				4995	3433	
Peak-hour factor, PHF	0.92	0.92	0.95	0.95	0.89	0.89
Adj. Flow (vph)	0	0	172	1697	412	0
RTOR Reduction (vph)	0	0	0	0	0	0
Lane Group Flow (vph)	0	0	0	1869	412	0
Confl. Peds. (#/hr)			96			
Turn Type			Perm			
Protected Phases				2	4	
Permitted Phases			2			
Actuated Green, G (s)				50.0	20.0	
Effective Green, g (s)				50.0	20.0	
Actuated g/C Ratio				0.62	0.25	
Clearance Time (s)				5.0	5.0	
Lane Grp Cap (vph)				3122	858	
v/s Ratio Prot					c0.12	
v/s Ratio Perm				0.37		
v/c Ratio				0.60	0.48	
Uniform Delay, d1				9.0	25.6	
Progression Factor				1.00	0.72	
Incremental Delay, d2				0.9	1.9	
Delay (s)				9.8	20.2	
Level of Service				A	C	
Approach Delay (s)	0.0			9.8	20.2	
Approach LOS	A			A	C	

Intersection Summary			
HCM Average Control Delay	11.7	HCM Level of Service	B
HCM Volume to Capacity ratio	0.56		
Actuated Cycle Length (s)	80.0	Sum of lost time (s)	10.0
Intersection Capacity Utilization	53.3%	ICU Level of Service	A
Analysis Period (min)	15		
c Critical Lane Group			