DAVID Y. IGE
GOVERNOR
STATE OF HAWAII

SHAN S. TSUTSUI
LT GOVERNOR
STATE OF HAWAII



JOBIE M. K. MASAGATANI
CHAIRMAN
HAWAIIAN HOMES COMMISSION

WILLIAM J. AILA, JR.
DEPUTY TO THE CHAIRMAN

**STATE OF HAWAII**
**DEPARTMENT OF HAWAIIAN HOME LANDS**

P. O. BOX 1879
HONOLULU, HAWAII 96805

RECEIVED
'16 JUL 26 P3:12
OFC. OF ENVIRONMENTAL QUALITY CONTROL

July 19, 2016

FILE COPY
AUG 08 2016

Scott Glenn, Director
Office of Environmental Quality Control
Department of Health, State of Hawai'i
235 S. Beretania Street, Room 702
Honolulu, Hawai'i 96813

Dear Mr. Glenn:

Subject: DEA/AFNSI for Proposed Department of Hawaiian Home Lands Kapa'akea Flood Mitigation Improvements

With this letter, the State of Hawai'i, Department of Hawaiian Home Lands (DHHL) hereby transmits the Draft Environmental Assessment and Anticipated Finding of No Significant Impact (DEA-AFNSI) for the Proposed Kapa'akea Flood Mitigation Improvements Project, situated on five (5) DHHL Homestead lots identified by TMKs (2)5-4-007:009(por.), (2)5-4-007:010(por.), (2)5-4-007:011(por.), (2)5-4-007:024(por.), and (2)5-4-007:025(por.), in Kaunakakai on the island of Moloka'i for publication in the next available edition of the Environmental Notice.

Enclosed is a completed OEQC Publication Form, two (2) copies of the DEA-AFNSI, an Adobe Acrobat PDF file of the same, and an electronic copy of the publication form in MS Word. Simultaneously with this letter, we have submitted the summary of the action in a text file by electronic mail to your office. If there are any questions, please contact Gwendolyn Rivera at (808) 244-2015.

Aloha,

Jobie M.K. Masagatani, Chairman
Hawaiian Homes Commission

Enclosures
c: Nancy McPherson, Department of Hawaiian Home Lands Planning Office (w/one copy)
Chad McDonald, Mitsunaga & Associates (w/one copy)
Chris Ball, Mitsunaga & Associates
Gwendolyn Rivera, Munekiyo Hiraga

17-039

FILE COPY
AUG 03 2016



# AGENCY PUBLICATION FORM

| | |
|---|---|
| Project Name: | Proposed Department of Hawaiian Home Lands Kapa'akea Flood Mitigation Improvements |
| Project Short Name: | Kapa'akea Flood Mitigation Improvements |
| HRS §343-5 Trigger(s): | Use of State Lands and State Funds |
| Island(s): | Moloka'i |
| Judicial District(s): | Moloka'i |
| TMK(s): | (2)5-4-007:009 (por.), (2)5-4-007:010 (por.), (2)5-4-007:011 (por.), (2)5-4-007:024 (por.), (2)5-4-007:025 (por.) |
| Permit(s)/Approval(s): | National Pollutant Discharge Elimination System (NPDES) Permit, as applicable; Community Noise Permit, as applicable; Building and Grading Permits, as applicable; Special Flood Hazard and Development Permit, as applicable |
| Proposing/Determining Agency: | State of Hawai'i, Department of Hawaiian Home Lands |
| *Contact Name, Email, Telephone, Address* | Nancy McPherson<br>Email: Nancy.M.McPherson@hawaii.gov<br>Phone: (808)620-9519<br>91-5420 Kapolei Parkway<br>Kapolei, Hawai'i 96707 |
| Accepting Authority: | (for EIS submittals only) Not Applicable |
| *Contact Name, Email, Telephone, Address* | |
| Consultant: | Munekiyo Hiraga |
| *Contact Name, Email, Telephone, Address* | Gwendolyn Rivera<br>Email: planning@munekiyohiraga.com<br>Phone: (808) 244-2015<br>305 High Street, Suite 104<br>Wailuku, Hawai'i 96793 |

| **Status (select one)** | **Submittal Requirements** |
|---|---|
| _X_ DEA-AFNSI | Submit 1) the proposing agency notice of determination/transmittal letter on agency letterhead, 2) this completed OEQC publication form as a Word file, 3) a hard copy of the DEA, and 4) a searchable PDF of the DEA; a 30-day comment period follows from the date of publication in the Notice. |
| ____ FEA-FONSI | Submit 1) the proposing agency notice of determination/transmittal letter on agency letterhead, 2) this completed OEQC publication form as a Word file, 3) a hard copy of the FEA, and 4) a searchable PDF of the FEA; no comment period follows from publication in the Notice. |
| ____ FEA-EISPN | Submit 1) the proposing agency notice of determination/transmittal letter on agency letterhead, 2) this completed OEQC publication form as a Word file, 3) a hard copy of the FEA, and 4) a searchable PDF of the FEA; a 30-day comment period follows from the date of publication in the Notice. |
| ____ Act 172-12 EISPN ("Direct to EIS") | Submit 1) the proposing agency notice of determination letter on agency letterhead and 2) this completed OEQC publication form as a Word file; no EA is required and a 30-day comment period follows from the date of publication in the Notice. |
| ____ DEIS | Submit 1) a transmittal letter to the OEQC and to the accepting authority, 2) this completed OEQC publication form as a Word file, 3) a hard copy of the DEIS, 4) a searchable PDF of the DEIS, and 5) a searchable PDF of the distribution list; a 45-day comment period follows from the date of publication in the Notice. |

| | |
|---|---|
| ____ FEIS | Submit 1) a transmittal letter to the OEQC and to the accepting authority, 2) this completed OEQC publication form as a Word file, 3) a hard copy of the FEIS, 4) a searchable PDF of the FEIS, and 5) a searchable PDF of the distribution list; no comment period follows from publication in the Notice. |
| ____ FEIS Acceptance Determination | The accepting authority simultaneously transmits to both the OEQC and the proposing agency a letter of its determination of acceptance or nonacceptance (pursuant to Section 11-200-23, HAR) of the FEIS; no comment period ensues upon publication in the Notice. |
| FEIS Statutory Acceptance | Timely statutory acceptance of the FEIS under Section 343-5(c), HRS, is not applicable to agency actions. |
| ____ Supplemental EIS Determination | The accepting authority simultaneously transmits its notice to both the proposing agency and the OEQC that it has reviewed (pursuant to Section 11-200-27, HAR) the previously accepted FEIS and determines that a supplemental EIS is or is not required; no EA is required and no comment period ensues upon publication in the Notice. |
| ____ Withdrawal | Identify the specific document(s) to withdraw and explain in the project summary section. |
| ____ Other | Contact the OEQC if your action is not one of the above items. |

**Project Summary**
Provide a description of the proposed action and purpose and need in 200 words or less.

The State of Hawai'i, Department of Hawaiian Home Lands (DHHL) proposes a flood mitigation project in Kaunakakai, Moloka'i to protect five (5) DHHL Homestead lots which are subject to flooding during periods of heavy rainfall. The proposed project involves the removal of an existing chain link fence and concrete masonry unit (CMU) wall. A new 4-foot high CMU wall is proposed for installation as a flood barrier along the north- and west-facing boundaries of the five (5) DHHL Homestead lots. The proposed CMU wall is approximately 700 feet in total length, including a rougly north-south portion and roughly east-west portion, and will terminate approximately 60 feet mauka of the shoreline. The project area includes a shoreline-fronting lot, and is located within the County of Maui's Special Management Area (SMA). However, as the project will be undertaken directly by DHHL on lands owned by DHHL, the County of Maui, Department of Planning determined that a SMA Permit is not required. Similarily, the Shoreline Setback Rules of the Moloka'i Planning Commission are not applicable to the project.

# Draft Environmental Assessment

# PROPOSED DEPARTMENT OF HAWAIIAN HOME LANDS KAPA'AKEA FLOOD MITIGATION IMPROVEMENTS MOLOKA'I, HAWAI'I

**Prepared for:**

**State of Hawai'i**

**Department of Hawaiian Home Lands**

**July 2016**

Copyright © 2016,
by Munekiyo Hiraga

MUNEKIYO HIRAGA

# CONTENTS


**Page**

Executive Summary ..... v
I. PROJECT OVERVIEW ..... 1
A. PROJECT LOCATION, EXISTING USE AND OWNERSHIP ..... 1
B. PROJECT NEED ..... 1
C. PROPOSED ACTION ..... 4
D. LAND USE ENTITLEMENTS AND REGULATORY APPROVALS ..... 7
E. PROJECT FUNDING AND SCHEDULING ..... 7

II. DESCRIPTION OF THE EXISTING ENVIRONMENT, POTENTIAL IMPACTS AND PROPOSED MITIGATION MEASURES ..... 8
A. PHYSICAL SETTING ..... 8
1. Surrounding Land Uses ..... 8
2. Climate, Topography and Soils ..... 9
3. Flood and Tsunami Hazards ..... 14
4. Flora and Fauna ..... 18
5. Marine Biological Resources ..... 21
6. Historical and Archaeological Resources ..... 22
7. Cultural Assessment ..... 26
8. Air and Noise Quality ..... 31
9. Streams and Wetlands ..... 32
10. Water Quality ..... 34
11. Scenic and Open Space Resources ..... 35
12. Traditional Beach and Mountain Access ..... 35
B. SOCIO-ECONOMIC ENVIRONMENT ..... 36
1. Population and Economy ..... 36
C. PUBLIC SERVICES ..... 37
1. Police and Fire Protection ..... 37
2. Medical Facilities ..... 37
3. Solid Waste ..... 38
4. Recreational Resources ..... 38
5. Educational Facilities ..... 39
D. INFRASTRUCTURE ..... 40
1. Roadways ..... 40
2. Water System ..... 41
3. Wastewater System ..... 41
4. Drainage ..... 42
5. Electrical, Telephone, and Cable Television ..... 45
E. CUMULATIVE AND SECONDARY IMPACTS ..... 45

III. RELATIONSHIP TO LAND USE PLANS, POLICIES, AND CONTROLS ..... 47
A. STATE LAND USE DISTRICTS ..... 47
B. CHAPTER 226, HRS, HAWAI'I STATE PLAN ..... 47
C. GENERAL PLAN OF THE COUNTY OF MAUI ..... 49
D. MOLOKA'I COMMUNITY PLAN ..... 51
E. ZONING ..... 52
F. SPECIAL MANAGEMENT AREA ..... 54
G. HAWAI'I COASTAL ZONE MANAGEMENT PROGRAM - OBJECTIVES AND ENFORCEABLE POLICIES ..... 54
1. Recreational Resources ..... 55
2. Historic Resources ..... 56
3. Scenic and Open Space Resources ..... 57
4. Coastal Ecosystems ..... 57
5. Economic Uses ..... 58
6. Coastal Hazards ..... 59
7. Managing Development ..... 60
8. Public Participation ..... 61
9. Beach Protection ..... 61
10. Marine Resources ..... 62

IV. SUMMARY OF ADVERSE ENVIRONMENTAL EFFECTS WHICH CANNOT BE AVOIDED ..... 64

V. ALTERNATIVES TO THE PROPOSED ACTION ..... 65
A. PREFERRED ALTERNATIVE ..... 65
B. DEFERRED OR NO ACTION ALTERNATIVE ..... 65

VI. IRREVERSIBLE AND IRRETRIEVABLE COMMITMENT OF RESOURCES ..... 66

VII. SIGNIFICANCE CRITERIA ASSESSMENT ..... 67

VIII. LIST OF PERMITS AND APPROVALS ..... 72

IX. PARTIES CONSULTED DURING THE PREPARATION OF THE DRAFT ENVIRONMENTAL ASSESSMENT; LETTERS RECEIVED AND RESPONSES TO SUBSTANTIVE COMMENTS ..... 73

X. REFERENCES ..... 184

# LIST OF FIGURES


| | | Page |
|---|---|---|
| **Figure 1.** | Regional Location Map | 2 |
| **Figure 2.** | Project Location Map | 3 |
| **Figure 3.** | Site and Grading Plan (Parcels 9, 10, 11 and 24) | 5 |
| **Figure 4.** | Site and Grading Plan (Parcel 25) | 6 |
| **Figure 5.** | Soil Association Map | 11 |
| **Figure 6.** | Soils Classification Map | 12 |
| **Figure 7.** | Agricultural Lands of Importance to the State of Hawai'i | 13 |
| **Figure 8.** | Flood Insurance Rate Map | 15 |
| **Figure 9.** | Tsunami Evacuation Map | 16 |
| **Figure 10.** | Previous Archaeological Survey Sites | 24 |
| **Figure 11.** | Mauka Property Owners | 44 |
| **Figure 12.** | State Land Use District Map | 48 |
| **Figure 13.** | Moloka'i Community Plan | 53 |


# LIST OF APPENDICES


| | |
|---|---|
| **Appendix A.** | Engineering Report |
| **Appendix B.** | Project Plans |
| **Appendix C.** | Communication from Planning Department that County has No Jurisdiction in SMA |
| **Appendix D.** | Real Property Tax Certification of Field Book Land Sheet (Parcel 9) |
| **Appendix E.** | Flora and Fauna Survey |
| **Appendix F.** | Archaeological Assessment Report |
| **Appendix F-1.** | State Historic Preservation Division Approval Letter for Archaeological Assessment Report |
| **Appendix G.** | Cultural Impact Assessment Report |
| **Appendix H.** | Wetland Study |

# LIST OF ACRONYMS

| | |
|---|---|
| AFNSI | Anticipated Finding of No Significant Impact |
| ALISH | Agricultural Lands of Importance to the State of Hawaii |
| ASL | Above Sea Level |
| BMPs | Best Management Practices |
| cfs | Cubic feet per second |
| CIA | Cultural Impact Assessment |
| CMU | Concrete Masonry Unit |
| cy | Cubic yards |
| DHHL | Department of Hawaiian Home Lands |
| DLNR | Department of Land and Natural Resources |
| EA | Environmental Assessment |
| FEMA | Federal Emergency Management Agency |
| FIRM | Flood Insurance Rate Map |
| FONSI | Finding of No Significant Impact |
| HCZMP | Hawai'i Coastal Zone Management Program |
| HAR | Hawai'i Administrative Rules |
| HRS | Hawai'i Revised Statutes |
| KMW | Kealia Silt Loam |
| LCA | Land Commission Awards |
| LSB | Land Study Bureau |
| MECO | Maui Electric Company, Ltd |
| MmA | Mala Silty Clay |
| MPC | Molokai Planning Commission |
| NPDES | National Pollutant Discharge Elimination System |
| Oceanic | Oceanic Time Warner Cable |
| OEQC | Office of Environmental Quality Control |
| SCS | Scientific Consulting Services, Inc. |
| SHPD | State Historic Preservation Division |
| SLUC | State Land Use Commission |
| SMA | Special Management Area |
| TMK | Tax Map Key |
| USACE | U.S. Army Corps of Engineers |
| USGS | U.S. Geological Survey |

# Executive Summary

| | |
|---|---|
| **Project Name:** | Proposed Department of Hawaiian Home Lands<br>Kapa'akea Flood Mitigation Improvements |
| **Type of Document:** | Draft Environmental Assessment |
| **Legal Authority:** | Chapter 343, Hawai'i Revised Statutes |
| **Agency Determination:** | Anticipated Finding of No Significant Impact (AFNSI) |
| **Applicable Environmental Assessment review "Trigger":** | Use of State Lands and Funds |
| **Location:** | Island of Moloka'i<br>South of Kamehameha V Highway<br>Kaunakakai, Moloka'i, Hawai'i<br>Tax Map Key (TMK) (2)5-4-007:009<br>TMK (2)5-4-007:010<br>TMK (2)5-4-007:011<br>TMK (2)5-4-007:024 and<br>TMK (2)5-4-007:025 |
| **Proposing and Determining Agency:** | State of Hawai'i<br>Department of Hawaiian Home Lands<br>Hale Kalaniana'ole<br>91-5420 Kapolei Parkway<br>Kapolei, Hawai'i 96707<br>Contact: Nancy McPherson, Planner<br>Phone No.: (808)620-9519 |
| **Consultant:** | Munekiyo Hiraga<br>305 High Street, Suite 104<br>Wailuku, Hawai'i 96793<br>Contact: Gwendolyn Rivera<br>Phone: (808) 244-2015 |

**Project Summary:**

The State of Hawai'i, Department of Hawaiian Home Lands (DHHL) proposes to plan, design, and construct the Kapa'akea Flood Mitigation Improvement project in Kaunakakai, Moloka'i. The proposed project involves the removal and demolition of the existing chainlink fence and stacked rubble wall. The new approximately 4-foot high Concrete Masonry Unit (CMU) wall is proposed for installation within the west and north boundaries of five (5) DHHL Homestead lots identified as TMK (2)5-4-007:009 (Parcel 9); (2)5-4-007:010 (Parcel 10); (2)5-4-007:011(Parcel 11); (2)5-4-007:024 (Parcel 24); and (2)5-4-007:025 (Parcel 25). A swale will also be installed on both sides of the new CMU wall. The proposed CMU wall is estimated to traverse a length of approximately 700 linear feet total and will terminate at a location approximately 60 feet mauka of the shoreline. The improvements are proposed as flood barriers to protect the five (5) DHHL Homestead lots during periods of heavy rainfall events.

The proposed project will be funded by State of Hawai'i, DHHL and will involve work within DHHL homestead lands. The use of State lands and funds are triggers for the preparation of an Environmental Assessment (EA) pursuant to Chapter 343, Hawai'i Revised Statutes (HRS), and Title 11, Chapter 200, Hawai'i Administrative Rules (HAR). The proposing and determining agency for the EA will be the State of Hawai'i DHHL.

Parcels 9, 10, 11, 24, and 25 are located within the County of Maui's Special Management Area (SMA). As the project will be undertaken directly by DHHL, the County of Maui has determined it does not have jurisdiction and, as such, the project does not require a SMA Use Permit.

Parcel 9 is a shoreline fronting parcel, and based on certified Real Property Tax records, was established on April 27, 1950, which is prior to the enactment of the Shoreline Setback Rules of the Moloka'i Planning Commission. As the project involves DHHL property, the Shoreline Setback Rules do not apply to the project based on the Planning Department's determination.

# I. PROJECT OVERVIEW

# I. PROJECT OVERVIEW

## A. PROJECT LOCATION, EXISTING USE AND OWNERSHIP

The proposed project site is located in Kaunakakai on the south-central coast of the island of Moloka'i, south of Maunaloa Highway and Kamehameha V Highway. See **Figure 1**. Kaunakakai is the largest town on the island of Moloka'i and serves as the center of population, commerce, and government. The town contains a variety of small shops and restaurants. Maui County offices, the State public library, and Moloka'i District Court are all located in Kaunakakai. Single-family residences surround the commercial core of Kaunakakai town, with the island's main harbor (Kaunakakai Harbor) and ferry terminal located on the edge of the town. Kamehameha V Highway is the main arterial roadway that accesses the town and connects the various industrial, commercial, public use, and residential areas along the coastline.

Approximately a mile eastward of Kaunakakai and beyond the Maui Community College are the Department of Hawaiian Home Lands (DHHL) Homestead lots. For purposes of the proposed project, there are five (5) DHHL Homestead lots located in the vicinity of Kapa'akea Loop Road, makai of Kamehameha V Highway. Each lot is occupied by resident beneficiaries of Hawaiian Home Lands. The lots are identified as Tax Map Keys (TMK) (2)5-4-007:009 (Parcel 9); (2)5-4-007:010 (Parcel 10); (2)5-4-007:011(Parcel 11); (2)5-4-007:024 (Parcel 24); and (2)5-4-007:025 (Parcel 25); collectively totaling approximately 2.5 acres hereafter referred to as "project site". See **Figure 2**. Adjacent to the subject lots is the Kōheo wetland area, which is located on property owned by Goodfellow Brothers. To protect these five (5) DHHL Homestead lots from flooding during storm events, mitigation improvements are proposed.

The project site is located in the State "Urban" district and is designated for "SF, Single Family" use by the Moloka'i Community Plan. The County Zoning designation is "Interim". The subject parcels are owned by the State of Hawai'i, Department of Hawaiian Home Lands (DHHL).

## B. PROJECT NEED

The DHHL 2005 Moloka'i Island Plan discusses that residents of the five (5) Homestead lots experience severe flooding events on an annual basis due to their location in the coastal area. See **Appendix "A"**, Engineering Report. The proposed project is intended to address and mitigate the stormwater flow impacts in this area as recognized in the plan.

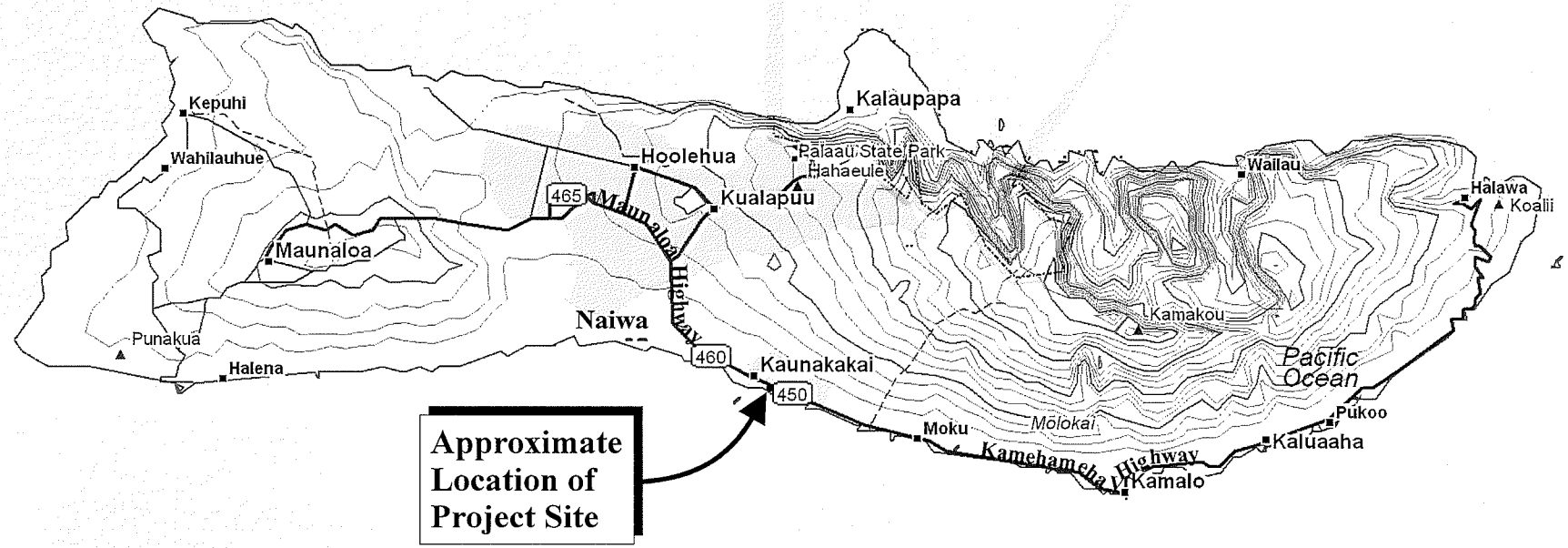


Source: DeLorme Topo Quads

# Figure 1 Proposed Department of Hawaiian Home Lands Kapa'akea Flood Mitigation Improvements

## Regional Location Map

NOT TO SCALE

Prepared for: State of Hawai'i, Department of Hawaiian Home Lands

MUNEKIYO HIRAGA

MAI\DHHL Kapaakea EA 1900\Applications\Figures\Regional Location

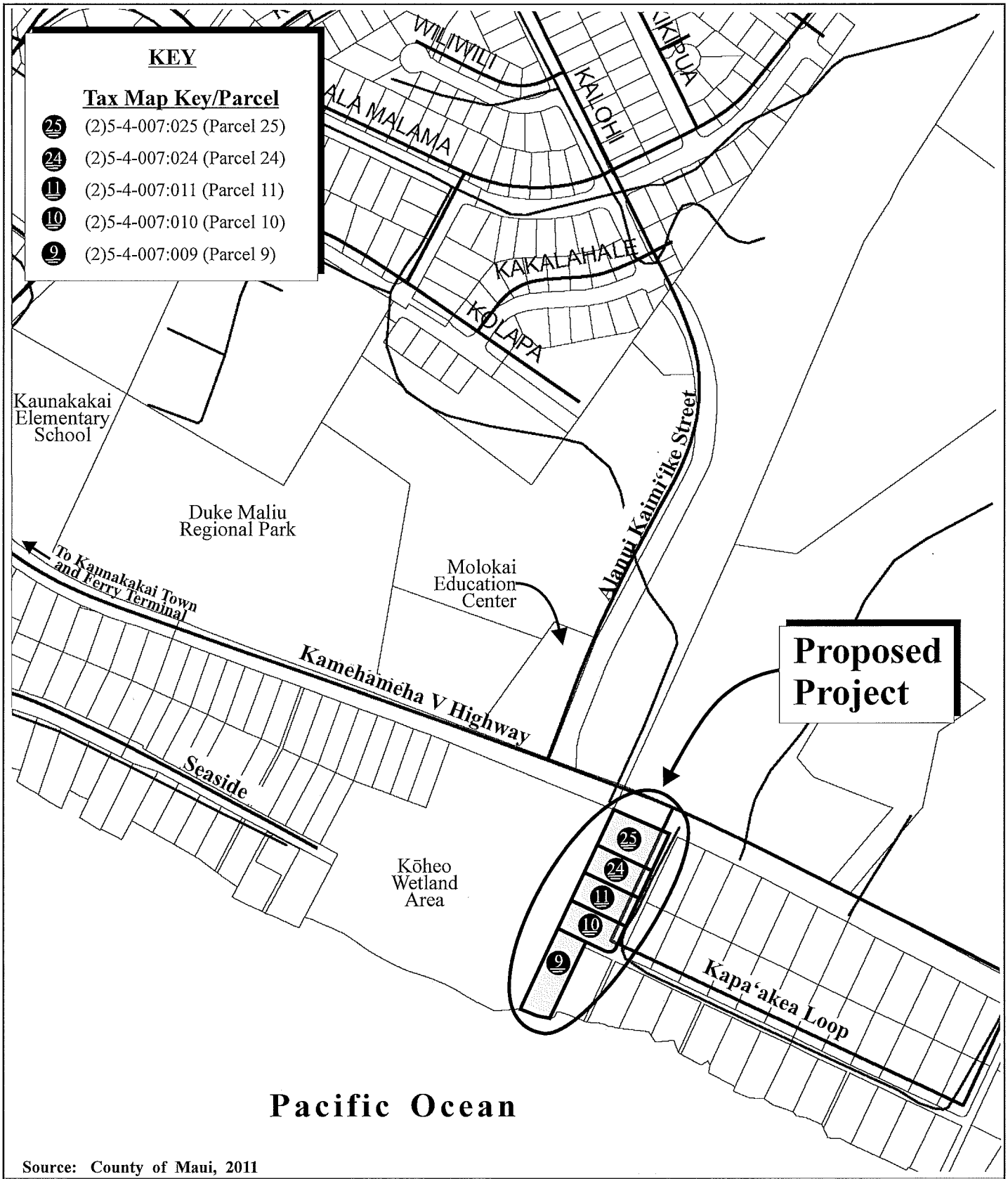


Source: County of Maui, 2011

# Figure 2 Proposed Department of Hawaiian Home Lands Kapa'akea Flood Mitigation Improvements

## Project Location Map

208.34 Feet
0 104.17 416.67

Prepared for: State of Hawai'i, Department of Hawaiian Home Lands

MUNEKIYO HIRAGA

DHHL Kapaakea EA 1900\Applications\Figures\Project Location

In 1976, the U.S. Army Corps of Engineers assessed the installation of a diversion ditch north of the Kamehameha V Highway and improvements to the drainage channel under the Kamehameha V Highway leading into the Kapa'akea Makai DHHL neighborhood, however, funding has not been allocated for these improvements. The Final Environmental Statement (1976) for that drainage project states that the most significant flood occurred during October 31st through early November in 1961, when the DHHL Homestead lots were inundated by approximately two (2) feet of water, which deposited approximately one (1) foot of mud on the lots. During the height of that storm, Kamehameha V Highway was under three (3) feet of water. The source of flooding is Kamiloloa Gulch and the subject lots are near the mouth of Kamiloloa Stream. Refer to **Appendix "A"**, Engineering Report.

To protect the existing residences located on the subject lots, DHHL proposes flood mitigation measures. See **Appendix "B"**, Project Plans. The proposed improvements would meet the need to protect the five (5) DHHL Homestead lots from flooding conditions during storm events.

## C. PROPOSED ACTION

DHHL proposes to design and construct the Kapa'akea Flood Mitigation Improvements project in Kaunakakai. The proposed project involves the removal and demolition of the existing chainlink fence and stacked rubble wall. A new, approximately 4-foot high CMU wall with swale (on both sides) is proposed for installation within the west and north boundaries of five (5) DHHL Homestead lots identified as Parcel 9, Parcel 10, Parcel 11, Parcel 24, and Parcel 25. See **Figure 3** (Parcels 9, 10, 11, and 24) and **Figure 4** (Parcel 25). Refer to **Appendix "B"**, Project Plans. The proposed improvements will encompass an area of 0.17 acre along the edge of the DHHL Homestead lots. The proposed CMU wall consists of an approximately 520-foot western segment and a 180-foot segment on the north, facing Kamehameha V Highway. The CMU wall is estimated to traverse a total length of approximately 700 linear feet and will terminate at a location approximately 60 feet mauka of the shoreline. Refer to **Appendix "B"**. The proposed project will divert the runoff from Kamehameha V Highway to the existing Kōheo wetland to the west and serve as a barrier to prevent stormwater flow from the wetland onto the subject lots during storm events.

The project storm drain system will be designed to comply with the latest County of Maui Rules for the Design of Storm Drainage Facilities in the County of Maui.

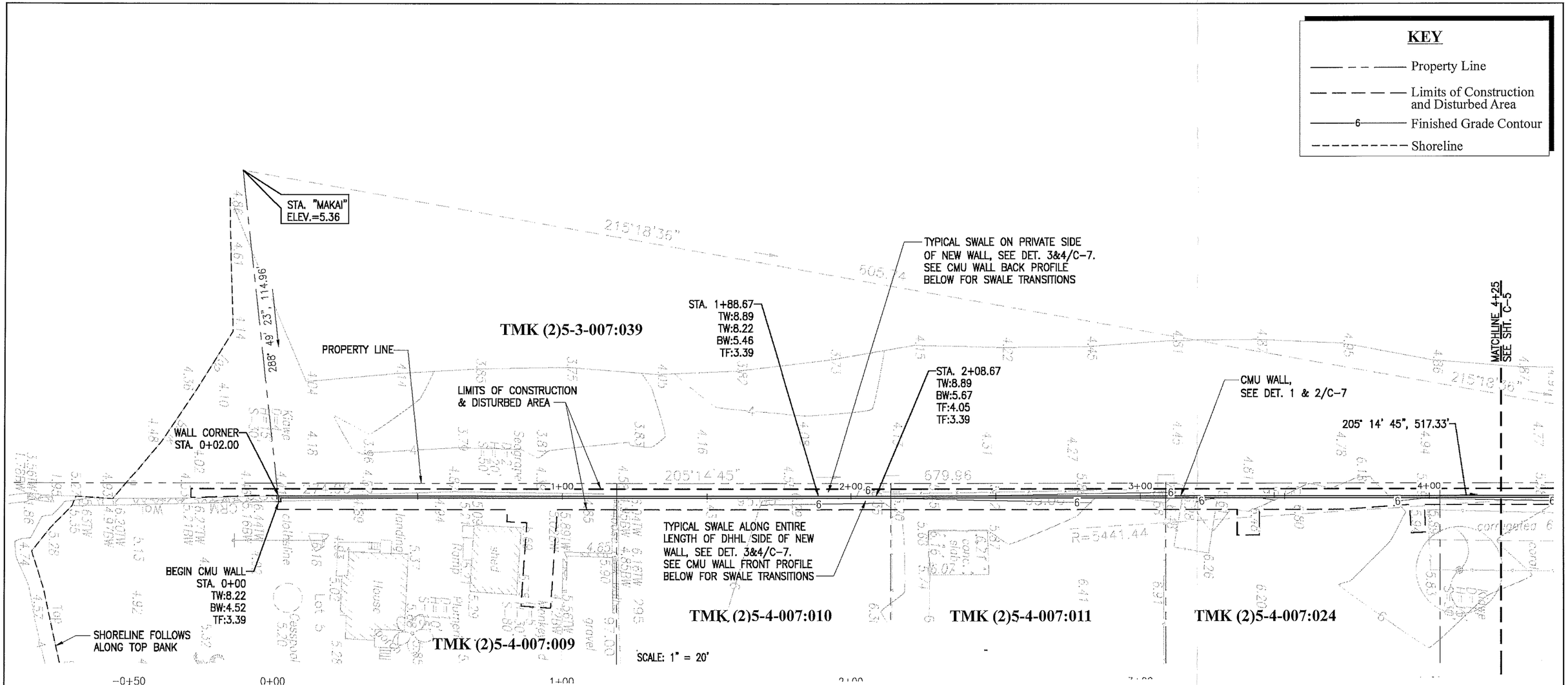


Source: Mitsunaga & Associates, Inc.

# Figure 3 Proposed Department of Hawaiian Home Lands Kapa'akea Flood Mitigation Improvements

Site and Grading Plan
(Parcels 9, 10, 11 and 24)

NOT TO SCALE

Prepared for: State of Hawai'i, Department of Hawaiian Home Lands

MUNEKIYO HIRAGA

DHHL Kapaakea EA 1900\Applications\Figures\SitePlan.Parcels.DraftEA

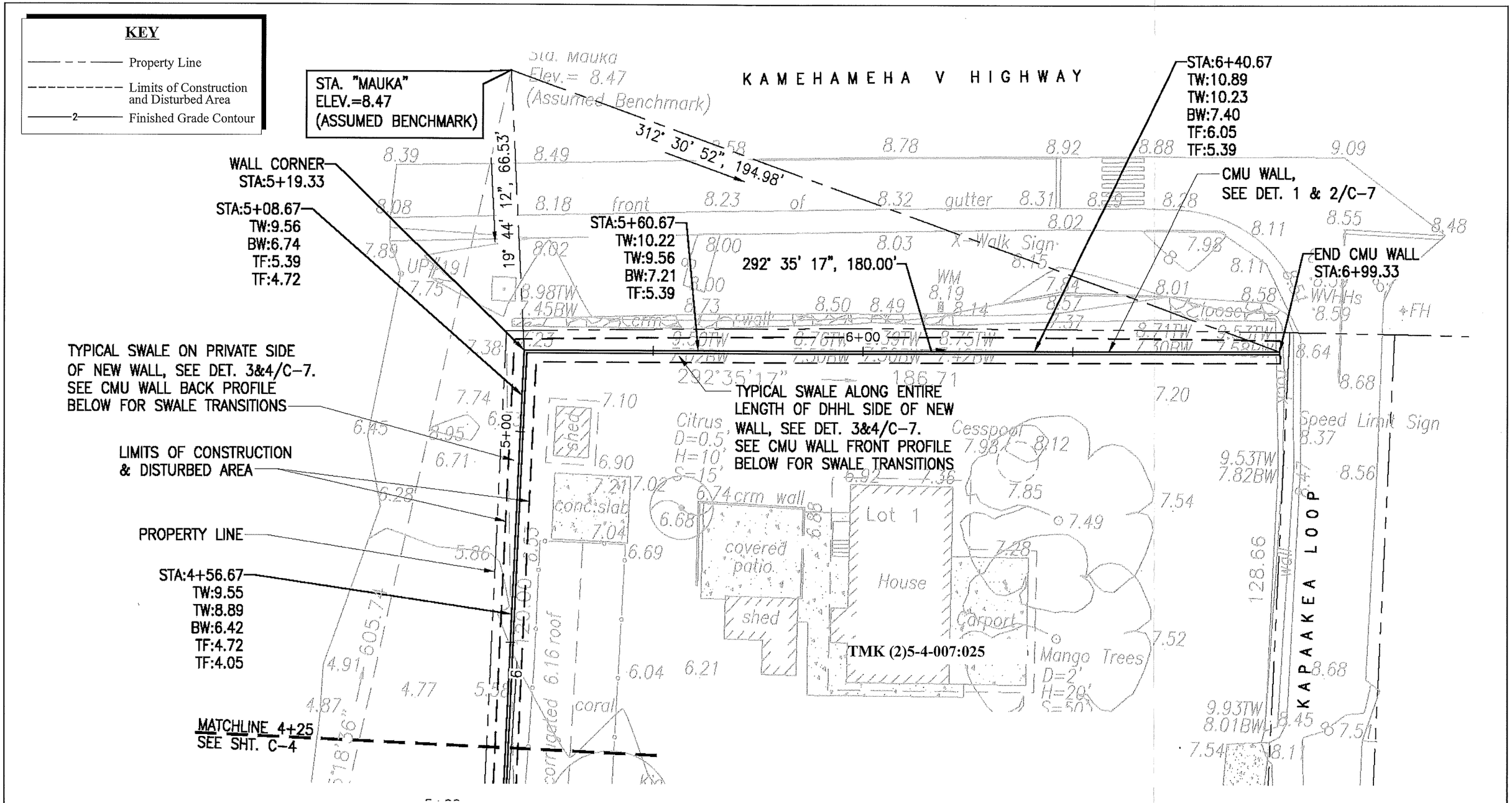


Source: Mitsunaga & Associates, Inc.

Figure 4 Proposed Department of Hawaiian Home Lands Kapa'akea Flood Mitigation Improvements

Site and Grading Plan (Parcel 25)

NOT TO SCALE

Prepared for: State of Hawai'i, Department of Hawaiian Home Lands

MUNEKIYO HIRAGA

DHHL Kapaakea EA 1900\Applications\Figures\SitePlan.Parcel25.DEA

## D. LAND USE ENTITLEMENTS AND REGULATORY APPROVALS

The proposed project will be funded by the State of Hawai'i, DHHL and will involve work within the DHHL homestead lands. The use of State funds and State lands are triggers for the preparation of an Environmental Assessment (EA) pursuant to Chapter 343, Hawai'i Revised Statutes (HRS), and Title 11, Chapter 200, Hawai'i Administrative Rules (HAR).

The EA will provide an analysis of potential environmental impacts associated with the flood mitigation improvements. The proposing and determining agency for the EA will be the State of Hawai'i, DHHL.

Parcels 9, 10, 11, 24, and 25 are located within the County of Maui's Special Management Area (SMA). As the project will be undertaken directly by DHHL on DHHL owned parcels, the County of Maui, Department of Planning determined that the five (5) DHHL Homestead lots are not within the County of Maui's Special Management Area (SMA) jurisdiction. As such, a SMA permit or approval is not required by the Department of Planning. See **Appendix "C"**, Communication from the Department of Planning.

Parcel 9 is a shoreline fronting parcel, and based on certified Real Property Tax records, was established on April 27, 1950, which is prior to the enactment of the Shoreline Setback Rules of the Moloka'i Planning Commission. See **Appendix "D"**. It is noted that based on the determination of no jurisdiction by the Planning Department, that the Shoreline Rules are not applicable for the proposed project. DHHL analyzed the proposed action and voluntarily applied the average lot depth method to the homestead parcel which abuts the shoreline. The minimum shoreline setback from the surveyed shoreline is approximately 60 feet, therefore, the project meets the purpose and intent of the Moloka'i Shoreline Rules and Chapter 205-A, particularly for the goals and objectives under Coastal Ecosystems, Coastal Hazards and Managing Development.

## E. PROJECT FUNDING AND SCHEDULING

Construction costs for the proposed project is estimated at approximately $221,680.00. Construction would take approximately four (4) months to complete. DHHL anticipates initiating construction of the project, after securing all necessary permits.

# II. DESCRIPTION OF THE EXISTING ENVIRONMENT, POTENTIAL IMPACTS AND PROPOSED MITIGATION MEASURES

# II. DESCRIPTION OF THE EXISTING ENVIRONMENT, POTENTIAL IMPACTS AND PROPOSED MITIGATION MEASURES

## A. PHYSICAL SETTING

### 1. Surrounding Land Uses

#### a. Existing Conditions

Kaunakakai is the largest town on the island of Moloka'i and serves as the center of population, commerce, and government. The main street of the town is centered on Ala Malama Avenue and contains a variety of small shops and restaurants. Maui County offices, the public library, and district court are all located in Kaunakakai. Single-family residences surround the commercial core of the town. Kaunakakai Harbor, the island's main harbor, and Kaunakakai Ferry Terminal are located at the edge of the town.

The proposed project is located on portions of five (5) DHHL Homestead lots Parcel 9, Parcel 10, Parcel 11, Parcel 24, and Parcel 25. Refer to **Figure 2**. The Homestead lots with residential homes are located approximately one (1) mile east of Kaunakakai Town and makai of Kamehameha V Highway. The lots are accessed via Kapa'akea Loop Road and are currently occupied by Hawaiian Homestead beneficiaries. Parcels 9, 10, and 11 contain homes that were constructed in the early 1950s. Parcel 24 contains a home built in the early 1960s, and Parcel 25 has a home built in the early 1990s.

A variety of industrial, commercial, and public uses are in the vicinity of the project site. Several restaurants are located at the corner of Kaunakakai Place and Kamehameha V Highway. On the east and south side of the project area is the Malama Cultural Park, a 3.3-acre community park that includes a canoe shelter and open fields. Other miscellaneous commercial and industrial uses are located in the vicinity.

The five (5) lots are part of the Hawaiian Homestead development in the area, with Parcel 9 abutting the shoreline. The subject lots are bordered to the north by Kamehameha V Highway, the main arterial roadway through Kaunakakai and adjacent to a vacant, wetland area to the west.

The project site is located in the State "Urban" district and is designated for "SF, Single Family" use by the Moloka'i Community Plan. The County zoning designation is "Interim".

**b. Potential Impacts and Proposed Mitigation Measures**

The proposed flood mitigation project will be limited to work within the north and west borders of the five (5) Homestead lots, and involves the removal of the existing chainlink fence and stacked rubble wall, and installation of a new CMU wall and swale and includes the implementation of Best Management Practices (BMPs) during construction. The project will provide necessary improvements that will mitigate existing stormwater runoff conditions that have contributed to flooding in the area during heavy rains. As such, the proposed improvements are not anticipated to adversely impact surrounding land uses.

## 2. Climate, Topography and Soils

**a. Existing Conditions**

Hawai'i's tropical location results in uniform weather conditions throughout the year. Climatic conditions on Moloka'i are characterized by mild and consistent year round temperatures, moderate humidity and steady northeasterly tradewinds. Variations in Moloka'i's weather are attributed to regional topographic and climatic conditions.

The proposed drainage system improvements will be located in Kaunakakai, on the southern slopes of the island of Moloka'i. The topography along the drainage corridor of the project is low and flat. Average annual rainfall in 2013 was approximately 15.10 inches in Kaunakakai. At the upper reaches of the watershed, there is greater rainfall, which averaged approximately 18.96 inches in 2013 at Moloka'i Airport. The months of October through March are typically the wetter periods of the year, with April through September being typically the drier months. Mean temperatures in the area range from 69.8 degrees Fahrenheit in March to 78.1 degrees Fahrenheit in September (Maui County Data Book, 2014).

Wind conditions are predominantly characterized by northeasterly tradewinds. However, as these winds round the eastern tip of the island and veer west at the southern coast, they blow in an easterly direction.

Underlying the proposed project site are soils belonging to the Jaucas-Mala-Pulehu Association. See **Figure 5**. The Jaucas-Mala-Pulehu Association is characterized by deep, nearly level and gently sloping, excessively drained and well-drained soils that have course-textured to fine-textured underlying material. It consists of soils that formed in alluvium and coral sand and vary widely in texture and drainage. The elevation ranges from sea level to 250 feet.

The specific soil types underlying the project site belong to the Kealia Silt Loam (KMW) series and Mala (MmA) series. See **Figure 6**. Kealia Silt Loam soil is poorly drained and has a high salt content. The soil has a brackish water table which is nearer the surface along the shoreline. Permeability is moderately rapid and runoff is slow to very slow. The slope ranges from 0 to 1 percent. This soil is used for wildlife habitat and pasture, but has low grazing value. It is not used for crops due to poor drainage and high salt content. Small areas are used for urban development. The Mala series consists of well-drained soil associated with drainageways and alluvial fans. Permeability is moderate, runoff is slow, and erosion hazard is slight. Slopes range from 0 to 3 percent. This soil is used for pasture, certain crops and orchards, and wildlife habitat (U.S. Department of Agriculture Soil Conservation Service, 1972).

The State Department of Agriculture has established three (3) categories of Agricultural Lands of Importance to the State of Hawai'i (ALISH). The ALISH system classifies lands into "Prime", "Unique", and "Other Important Agricultural Land". The remaining lands are "Unclassified". Utilizing modern farming methods, "Prime" agricultural lands have the soil quality, growing season, and moisture supply needed to produce sustained crop yields economically, while "Unique" agricultural lands possess a combination of soil quality, location, growing season, and moisture supply currently used to produce sustained high yields of a specific crop. "Other Important Agricultural Land" includes those which have not been rated as "Prime" or "Unique". The proposed flood mitigation improvements are located on lands that are not classified within the ALISH rating system. See **Figure 7**. It is noted that the University of Hawai'i, Land Study Bureau classified the lands in the project area as "E49", the lowest productivity rating for agricultural use (University of Hawai'i, 1967).

# LEGEND

| | |
|---|---|
| ① Jaucas-Mala-Pulehu Association | ④ Very stony land-Rock land Association |
| ② Molokai-Lahaina Association | ⑤ Rough broken land-Oli Association |
| ③ Kahanui-Kalae-Kanepuu Association | ⑥ Rough mountainous land-Amalu-Olokui Association |

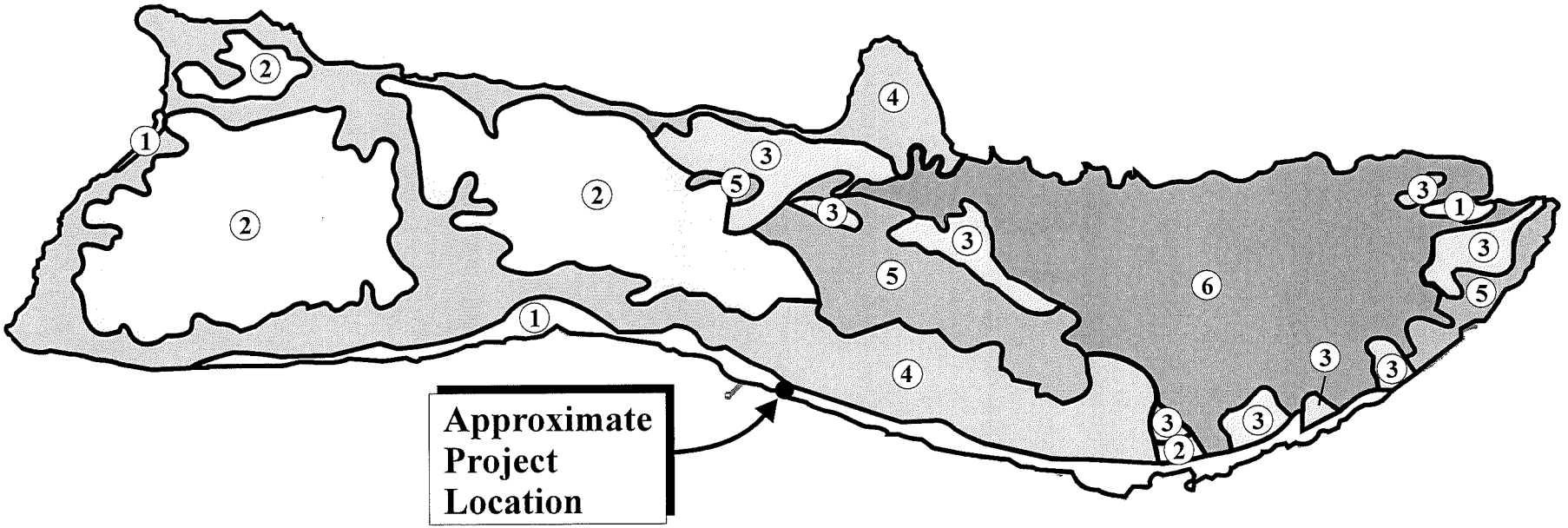


Source: U.S. Department of Agriculture, Soil Conservation Service

Figure 5 Proposed Department of Hawaiian Home Lands
Kapa'akea Flood Mitigation Improvements
Soil Association Map

NOT TO SCALE

Prepared for: State of Hawai'i, Department of Hawaiian Home Lands

MUNEKIYO HIRAGA

DHHL Kapaakea EA 1900\Applications\Figures\Soils

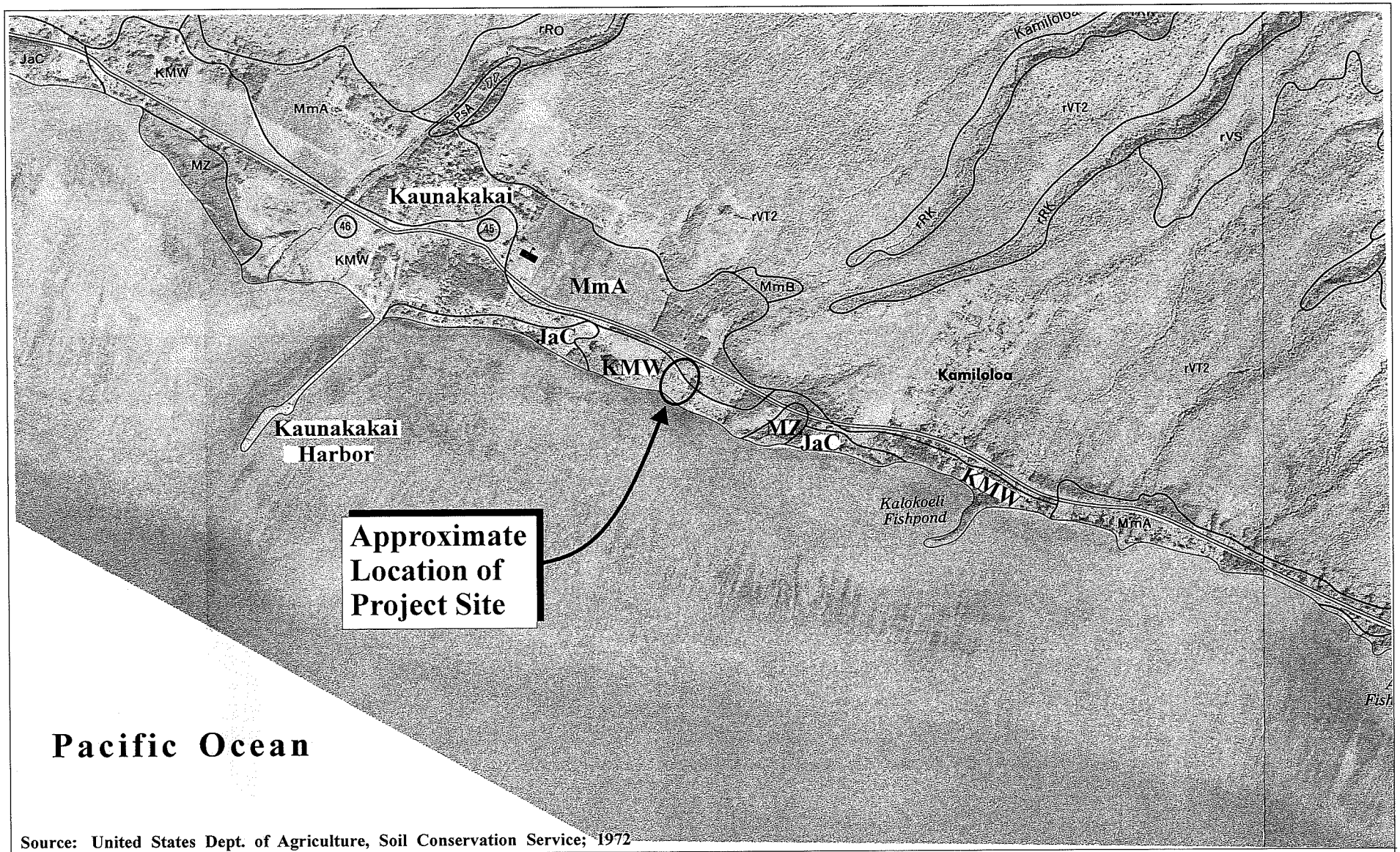


Source: United States Dept. of Agriculture, Soil Conservation Service; 1972

# Figure 6 Proposed Department of Hawaiian Home Lands Kapa'akea Flood Mitigation Improvements

## Soils Classification Map

NOT TO SCALE

Prepared for: State of Hawai'i, Department of Hawaiian Home Lands

MUNEKIYO HIRAGA

MAI\DHHL Kapaakea EA 1900\Applications\Figures\Soil

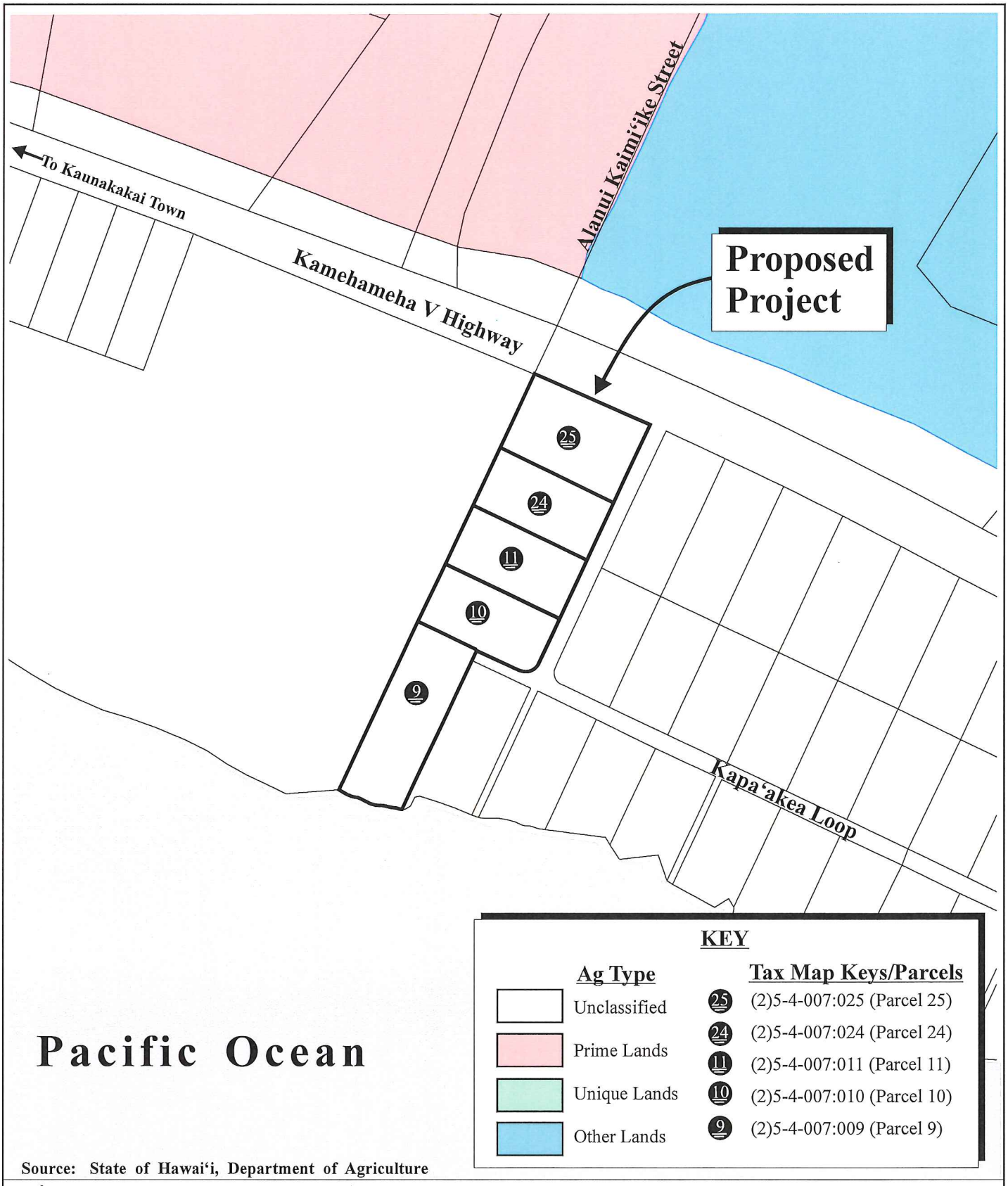


Source: State of Hawai'i, Department of Agriculture

# Figure 7 Proposed Department of Hawaiian Home Lands Kapa'akea Flood Mitigation Improvements

## Agricultural Lands of Importance to the State of Hawai'i

0 100 Feet
50 200

Prepared for: State of Hawai'i, Department of Hawaiian Home Lands

MUNEKIYO HIRAGA

### b. Potential Impacts and Proposed Mitigation Measures

The proposed action is not anticipated to adversely impact existing climatic conditions in the region. Construction of the proposed improvements involve grading. The graded area is approximately 0.20-acre, with excavation of 100 cubic yards (cy) and embankment of 10 cy. The disturbed area is estimated at 0.33-acre. Refer to **Appendix "B"**, Sheet C-4 of Project Plans. The project design incorporates the existing hydrology and natural filtering process of the adjacent wetlands to mitigate significant adverse impacts. Further minimizing impact is a project design that confines the footprint to 0.17 acre. As such, significant adverse impact to existing soil conditions is not anticipated.

The proposed mitigation project is intended to protect the five (5) Homestead lots during storm events and address flooding on these properties.

## 3. Flood and Tsunami Hazards

### a. Existing Conditions

According to the Flood Insurance Rate Maps (FIRMs) developed by the Federal Emergency Management Agency (FEMA), Parcel 25, (FIRM Panel Map 1500030193F), is located in Flood Zone AE. A small corner of Parcel 24 (FIRM Panel No. 1500030193F) is located in Zone VE with a majority of the parcel in Zone AE. Portion of Parcels 10 and 11 (FIRM Panel Map 1500030193F) are located in Zone AE and Zone VE. Parcel 9 (FIRM Panel Map 1500030189F) is located in Zone VE. See **Figure 8**. Flood Zone AE is in the portions of the project area represents a special flood hazard area that is subject to flooding by the 1-percent annual chance flood with a base flood elevation of 10 feet. Flood Zone VE represents coastal areas with a base flood elevation of 12 feet and a one (1) percent or greater chance of flooding and additional hazard associated with storm waves. A County of Maui Flood Development Permit will be obtained, as may be applicable to the project.

The DHHL Homestead parcels are identified on the tsunami evacuation maps developed by the State Civil Defense Agency. See **Figure 9**. It is noted that the proposed project involves the installation of a new CMU wall

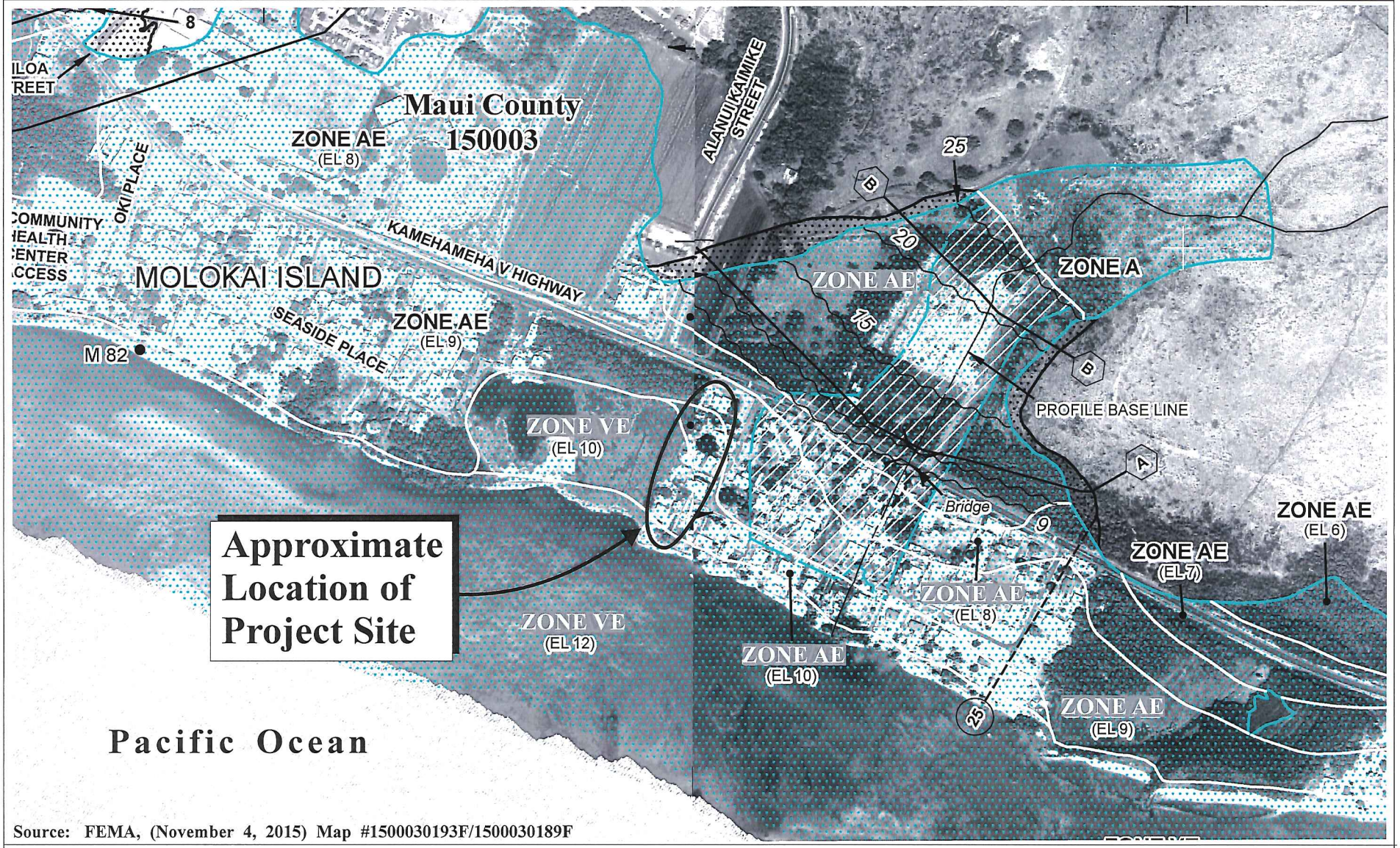


Figure 8 Proposed Department of Hawaiian Home Lands
Kapa'akea Flood Mitigation Improvements
Flood Insurance Rate Map

0 125 250 500 Feet

Prepared for: State of Hawai'i, Department of Hawaiian Home Lands

MUNEKIYO HIRAGA

MAI\DHHL Kapaakea EA 1900\Applications\Figures\FIRM.DraftEA

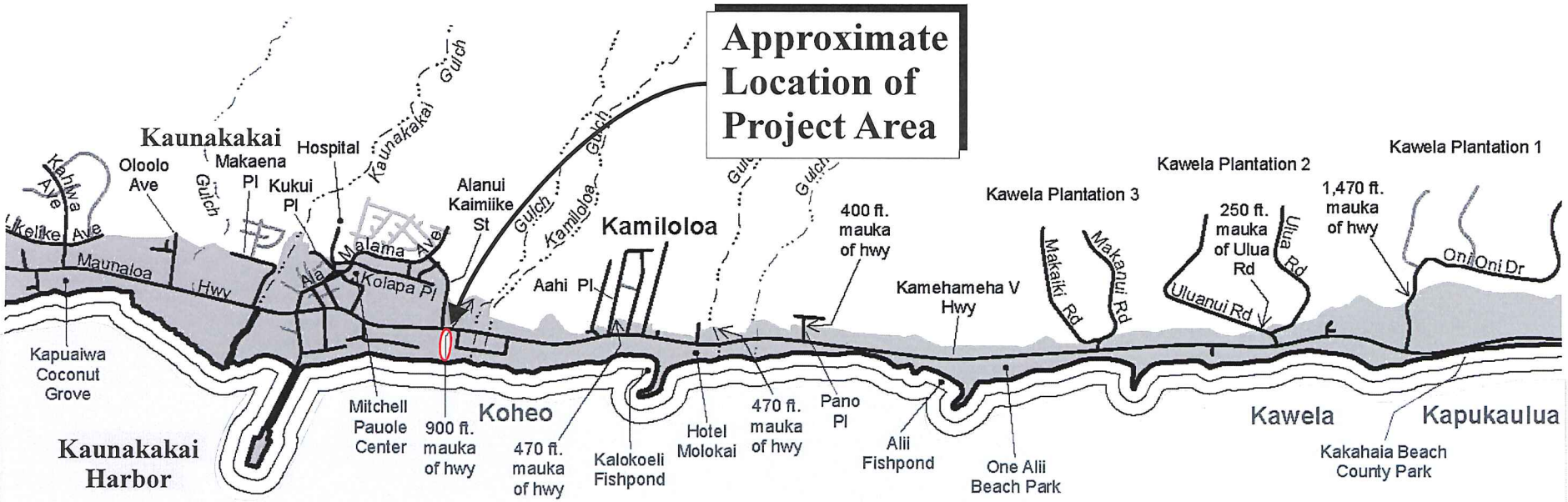


Source: County of Maui, Civil Defense Agency

# Figure 9 Proposed Department of Hawaiian Home Lands Kapa'akea Flood Mitigation Improvements

## Tsunami Evacuation Map

NOT TO SCALE

Prepared for: State of Hawai'i, Department of Hawaiian Home Lands

MUNEKIYO HIRAGA

MAI/DHHL Kapaakea Flood/Tsunami

and swale, and removal of the existing chainlink fence and stacked rubble wall, which are non-habitable elements on the parcels.

As previously discussed in Chapter I of this Draft EA, residents of the DHHL Homestead lots experience severe flooding events on an annual basis due to the location of these lots within the coastal area. The onsite flow is attributed to the stormwater that falls on each lot in addition to the offsite stormwater that overflows from Kamiloloa Stream. Refer to **Appendix "A"**, Engineering Report.

In 1976, the U.S. Army Corps of Engineers (USACE) assessed the installation of a diversion ditch north of the Kamehameha V Highway and improvements to the drainage channel under the highway leading in the Kapa'akea Makai DHHL neighborhood, however, funding has not been allocated for these improvements. The Final Environmental Statement (1976) for the USACE drainage project states that the most significant flood occurred during October 31st through early November in 1961 when the DHHL Homestead lots were inundated by approximately two (2) feet of water, which deposited approximately one (1) foot of mud on the lots. During the height of that storm, Kamehameha V Highway was under three (3) feet of water. Refer to **Appendix "A"**, Engineering Report.

As previously noted, Parcel 9 is a shoreline fronting parcel, and based on certified Real Property tax records, was established on April 27, 1950, which is prior to the enactment of the Moloka'i Planning Commission Shoreline Setback Rules. Refer to **Appendix "D"**. As the project involves DHHL property, the Shoreline Setback Rules were determined not applicable to the project. The proposed CMU wall replacement and swale are approximately 60 feet away from the surveyed shoreline.

The proposed non-habitable improvements are located within the tsunami evacuation zone. The tsunami evacuation zone in the vicinity of the project site generally extends from the coast to the makai side of Maunaloa Highway and Kamehameha V Highway. Refer to **Figure 9**.

**b. <u>Potential Impacts and Proposed Mitigation Measures</u>**

The proposed mitigation improvements will be located within areas designated Flood Zone AE (base flood elevation of 10 feet), an area subject to 1-percent annual chance flood, and Flood Zone VE (base flood elevation

of 12 feet), for coastal areas with a one (1) percent or greater chance of flooding. As the project area is within a special flood hazard area, a Flood Development Permit application will be submitted to the Department of Planning, as may be applicable. It is noted that the proposed improvements will help to address flooding conditions in the project area, and protect the DHHL Homestead lots during storm events.

The proposed project is located within the tsunami evacuation area. However, the proposed project is limited to replacement of the existing chainlink fence and stacked rubble wall with the installation of new CMU walls that will provide improved drainage and flood protection for the DHHL Homestead lots. As such, adverse impacts related to tsunami hazards are not anticipated.

The proposed project is a mitigation measure to provide improvements to meet the needs of and address the flooding conditions in this residential area. As previously discussed, the CMU wall will divert the flow from Kamehameha V Highway to the existing wetland and will prevent runoff from the wetland onto the DHHL Homestead lots. Refer to **Appendix "A"**, Engineering Report.

## 4. Flora and Fauna

### a. Existing Conditions

The terrain is nearly level on this coastal plain, vegetation is mostly domestic landscape type, including mowed lawns, shade trees, low hedges and a few scattered ornamentals and fruit trees.

The proposed project involves replacing the existing chainlink fence and stacked rubble wall on the subject DHHL Homestead Lots with a new CMU wall.

In January 2016, Robert Hobdy conducted a survey for the project. See **Appendix "E"**. A total of 25 plant species were recorded during the survey and none were species endemic to Hawai'i: Three (3) species were indigenous to Hawai'i milo (*Thespesia populnea*), kīpūkai (*Heliotropium curassavicum*) and 'ekaha or birds nest fern (*Asplenium nidus*). The milo and 'ekaha have been purposely planted and are being cultivated as ornamentals, and only the common kīpūkai was found growing naturally.

Three (3) non-native mammal species were observed during the course of the survey. These were all domesticated animals including dogs (*Canis familiaris*), cats (*Felis catus*), and a pig (*Sus scropha*). Other mammals one might expect to encounter on the property include the mongoose (*Herpestes auropunctatus*), rats (*Rattus rattus*), and mice (*Mus domesticus*).

A special effort was made to look for the native Hawaiian hoary bat by conducting an evening survey of the area. No evidence of such activity was observed though visibility was excellent. In addition, no bats were detected using the Batbox IIID device, an ultrasonic bat detector.

There were moderate amounts of birdlife observed in the project area during four (4) site visits. Eleven (11) species were recorded including ten (10) non-native species and one (1) migratory winter visitor. Taxonomy and nomenclature follow the American Ornithologists' Union (2014). Common species were zebra dove *(Geopelia striata),* chicken (*Gallus gallus*), common myna (*Acridotheres tristis*), spotted dove (*Streptopelia chinensis*), and pigeon (*Columba livia*). Uncommon were the house sparrow (*Passer domesticus*), cattle egret (*Bubulcus ibis*), and gray francolin (*Francolinus pondicerianus*). Rare species included the African silverbill *(Lonchurus cantans),* Pacific golden-plover or kolea *(Pluvialis fulva )* and northern cardinal *(Cardinalis cardinalis).* A few other non-native birds may occasionally occur in the project area, but this habitat is not suitable for Hawai'i's native forest birds which presently occur only in higher elevation native forests.

The adjacent Kōheo Wetland consistently supports a number of waterbirds and shorebirds, including the indigenous 'auku'u or black-crowned night-heron (*Nycticorax nycticorax hoactli*) and the endemic and Endangered Ae'o or Hawaiian stilt (*Himantopus mexicanus knudseni*) and the 'alae ke'oke'o or Hawaiian coot (*Fulica alai*). Migratory species include the 'ūlili or wandering tattler (*Tringa incana*), long-billed dowitcher (*Limnodromus scolopaceus*), 'akekeke or ruddy turnstone (*Arenaria interpres*), hunakai or sanderling (*Calidris alba*), kioea or bristle-thighed curlew (*Numenius tahitiensis*), and the semipalmated plover (*Charadrius semipalmatus*). These waterbirds and shorebirds are nearly obligates to these habitats and rarely venture into upland habitats. None were observed in the project area.

Ten (10) species of non-native insects were recorded, including two (2) species of common occurrence, the western pygmy blue butterfly *(Brephidium exile)* and the monarch butterfly *(Danaus plexippus)*. Uncommon were the southern house mosquito *(Culex quiquefasciatus)*, the pill bug *(Porcellio laevis),* and the long tail blue butterfly *(Lampides boeticus)*. No native insects or important host plants of native insects were found during the survey.

The fauna survey of the project area did not encounter a single native mammal, bird or insect species, and no special habitat for any native animal species was found.

**b. <u>Potential Impacts and Proposed Mitigation Measures</u>**

The survey found that the project area was previously disturbed, and adverse effects to rare, threatened, or endangered animals or plants are not anticipated from the proposed flood mitigation improvements.

No Federal or State listed threatened or endangered species of wildlife were recorded by the survey, nor were any found that are candidates for such status. Refer to **Exhibit "E"**, Flora and Fauna Survey.

The adjacent Kōheo wetland is under a cooperative agreement with a Moloka'i entity that is pursuing a number of habitat enhancements and other protective measures for endangered waterbirds. The wetland has sufficient buffer that allows the birds to coexist with surrounding human activities in relative peace.

Construction activities are expected to be limited to daylight hours. However, should construction flood lights be required for night activities, these lights will be shielded and directed downward to minimize potential impacts to seabirds that may be confused by bright lights. Upon completion, the flood mitigation improvements constructed along the western edge (on a non-wetland alignment) would not have significant adverse impact on the botanical resources in the area.

The construction of a cement wall within 150 feet of the wetland, however, will produce a heightened level of disturbance for a time. The survey report recommended that work activities be monitored to minimize unnecessary levels of equipment and human noise so as not to unduly disturb the birds. Refer to **Appendix "E"**, Flora and Fauna Survey.

## 5. Marine Biological Resources

### a. Existing Conditions

The nearest point of the proposed project is located approximately 60 feet away from the shore. The lots within the project range in elevation from three (3) feet to five (5) feet above sea level (asl), and the terrain is nearly level on this coastal plain. Refer to **Appendix "E"**, Flora and Fauna Survey.

### b. Potential Impacts and Proposed Mitigation Measures

The proposed project is not anticipated to have significant impacts on the nearshore area since the proposed project is located approximately 60 feet away from the shore. The proposed CMU wall and swale will be installed along the west and north borders of the subject DHHL Homestead lots, to protect these parcels from flooding during storm events. The proposed project will direct surface runoff generated from storm events towards the adjacent wetland area and ocean as a mitigation measure to protect the DHHL Homestead lots from flooding.

During storm events, runoff from the areas upland of the project site occurs as sheet flow in a southerly direction towards the ocean. The proposed flood mitigation project, which is intended to direct runoff away from the DHHL Homestead lots, is not expected to have a significant adverse impact on the existing marine resources. During construction, Best Management Practices (BMPs) will be implemented. BMPs include instituting erosion control measures as recommended by the County of Maui "Rules for the Design of Storm Water Treatment Best Management Practices", August 2012; and "Rules Relating to Soil Erosion Standards and Guidelines", April 1999; minimizing the amount of land exposed at any time; exposed areas that are not at final grade and expected to be exposed more than 30 days shall be placed with a vegetative cover or be mulched; and removing temporary erosion controls after permanent erosion controls are in place and established. BMPs include proper control of fugitive dust from entering State waters; use of berms, sandbags, filter fences and catchments; and removing and disposing of accumulated silt on a routine basis. Refer to **Appendix "A"**, Engineering Report and **Appendix "B"**, Project Plans.

No grading or ground disturbance beyond the removal of the existing chainlink fence and stacked rubble wall, and the installation of the new CMU wall are associated with the proposed work. Based on the varying topography of the project area, the CMU installation will be approximately two (2) to four (4) feet below grade, requiring excavation along the northern boundaries of each homestead lot. The proposed action will not impact any environmentally sensitive features or create long-term adverse effects to the marine environment. Refer to **Appendix "E"**, Flora and Fauna Survey.

## 6. Historical and Archaeological Resources

### a. Existing Conditions

In October 2015, Garcia and Associates prepared an Archaeological Assessment Report which found that previous archaeological work was conducted within the project area and was limited in surrounding areas. A search of the Hawai'i State Historic Preservation Division (SHPD) library indicated that only three (3) projects have been conducted in Kapa'akea Ahupua'a, and most of the previous work conducted within the neighboring Kaunakakai Ahupua'a was focused on Kaunakakai Town center located approximately one (1) mile to the west. See **Appendix "F"**, Archaeological Assessment Report.

In 1909, John F. G. Stokes conducted an island wide survey of Moloka'i to document the remains of *heiau* on the island. While this early survey is limited by its focus on relatively large structures, a number of large habitation complexes and fish ponds were also recorded (Summers 1971). The following site for Kapa'akea were noted:

**Site 50-60-03-132:** Kapa'akea Pond was a *pu'uone*, or an inland pond connected to the ocean by a ditch or stream. The pond is described having an area of 5.45 acres which extended from the sea shore to the Government Road. The pond was filled in by the time Stokes made his observation.

James M. Dunn, a former surveyor of the State of Hawai'i made the following observation of Kapa'akea Pond in 1957 (Summers 1971):

> *The pond has been neglected for a long period of time and can hardly be called such any more. It has been almost totally filled by silt washed down from the highlands mauka*

> of *the road and is covered with dense growth of mangrove with some kiawe. The undergrowth is a thick mat of akulikuli. The old springs which fed this pond are either clogged or dried up and no longer available (Summers 1971:88).*

Kapa'akea Pond is located .40-mile southeast of the current study area within an undeveloped and overgrown tract of land along the coast situated between two (2) residential areas.

In 1977, the Archaeological Research Center Hawaii, Inc., conducted a reconnaissance survey for the Kapa'akea Flood Control Project on the lower slopes of Pu'u Maninikolo (Davis 1977). The survey produced a single archaeological complex designated as Site 50-60-03-1600. The site consisted of seven (7) features including a large platform, a small terrace enclosure, rock mounds, large walled enclosures, and a trail. Basalt flakes and surface midden were also observed. The site was interpreted as historic, consisting of rock mounds and a platform, interpreted as a possible historic cemetery. Later that year, the Bishop Museum was commissioned to re-evaluate Site 50-60-03-1600 and conduct subsurface testing. This work produced two (2) additional features which include an enclosure and a cairn. While subsurface excavation produced no dateable material, a historic human burial was identified during excavations of the large platform. The site was interpreted as a historic cemetery with pre-Contact components. The 50-60-03-1600 archaeological complex is located 0.15-mile east of the current project area. See **Figure 10**.

An archaeological assessment was conducted 0.06-mile northwest of the current project area for the addition of the Verizon Wireless H12 Kaunakakai Cell site (Dye and Jordane 2006). No cultural properties were identified during the assessment. Refer to **Figure 10**.

In 2006, an archeological assessment was conducted of a 5-acre parcel for the Kaunakakai Fire Station (McGerty and Spear 2006). The project area was once a part of Moloka'i Ranch and is situated along the boundary of Kaunakakai and Kapa'akea Ahupua'a approximately 0.24-mile north of the current project area. No cultural properties were identified during the assessment. Refer to **Figure 10**.

In 2011, Scientific Consulting Services, Inc., (SCS) conducted archaeological monitoring for the construction of two (2) drainages in Kapa'akea Ahupua'a (Perzinski and Dega 2011). The drainages crossed

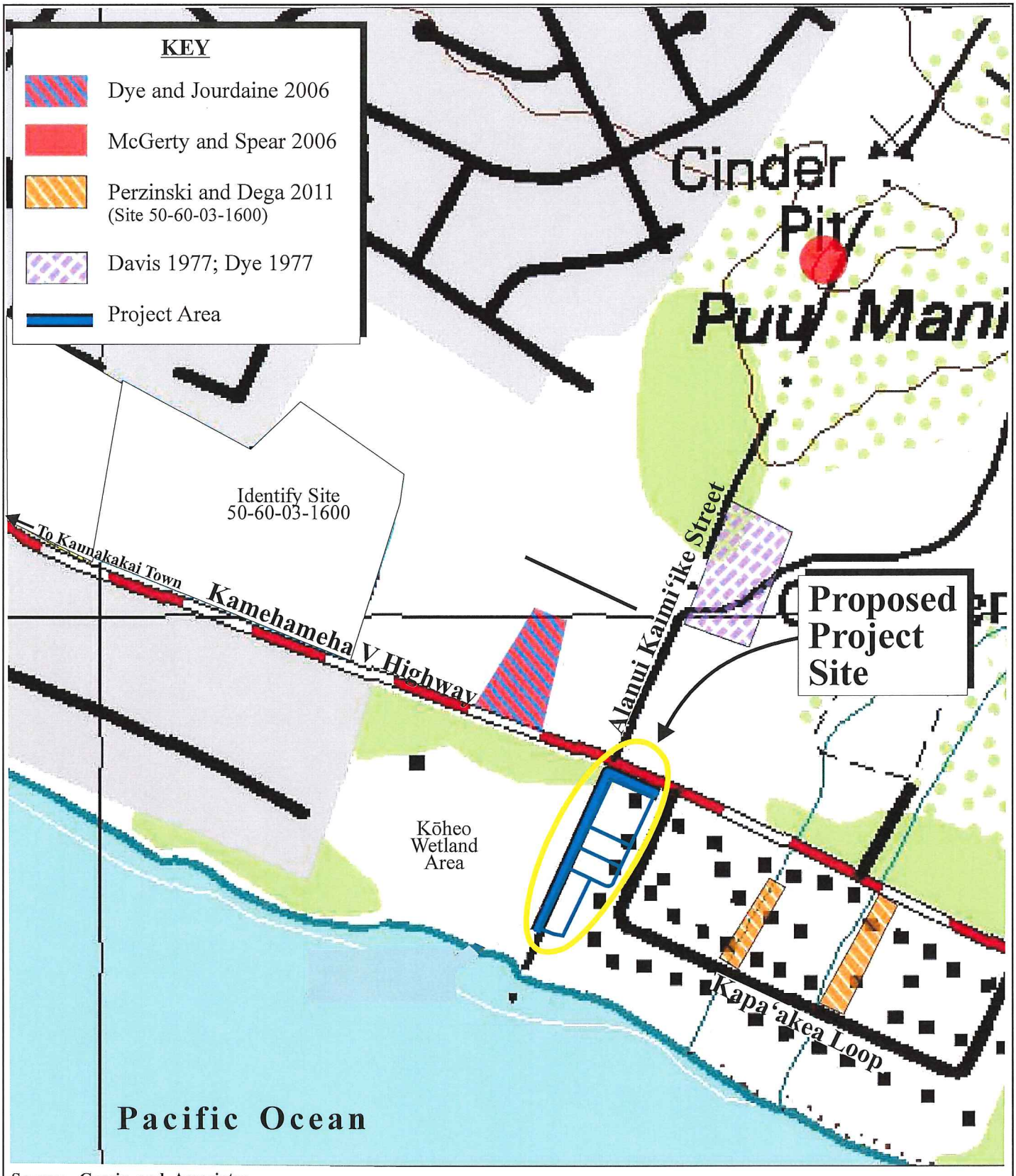


Source: Garcia and Associates

# Figure 10 Proposed Department of Hawaiian Home Lands Kapa'akea Flood Mitigation Improvements

## Previous Archaeological Survey Sites

NOT TO SCALE

Prepared for: State of Hawai'i, Department of Hawaiian Home Lands

MUNEKIYO HIRAGA

MAI\DHHL Kapaakea EA 1900\Applications\Figures\ArchSite

beneath Kamehameha V Highway and through the Kapa'akea Homesteads. This project was located approximately 0.11-mile southwest of the current project area and monitoring results produced no findings. Refer to **Figure 10**.

According to Garcia and Associates, U. S. Geological Survey (USGS) aerial photographs of Moloka'i's southern shoreline indicate, the Kapa'akea Residential Homestead lots were constructed sometime between 1950 and 1964. In the 1950 aerial photograph, the homestead location is clearly undeveloped, overgrown with vegetation, and the western area of the homestead site appears to be tidal wetlands. By 1964, a USGS aerial photograph shows that construction of some houses in the Kapa'akea Residential Homestead was completed with a number of structures built around Kapa'akea Loop. Refer to **Appendix "F"**, Archaeological Assessment Report.

Three (3) consultations were conducted by Garcia and Associates with persons knowledgeable about the history of the project area and presence of cultural resources. These consisted of interviews and site tours with Ms. Arleone Dibben-Young, Mr. Dean Spencer, and Mr. Boom. Ms. Dibben-Young is a biologist who manages the wetland adjacent to the project corridor. Mr. Spencer was born and raised in the Kapa'akea Homesteads, and Mr. Boom is a long-time resident of the homesteads. The three (3) interviewees were not aware of any cultural resources in or near the project area. Refer to **Appendix "F"**, Archaeological Assessment Report.

**b. <u>Potential Impacts and Proposed Mitigation Measures</u>**

Surface surveys and subsurface testing were conducted at the project. Except for a modern remnant wall, no surface features were encountered. A total of 13 test trenches were excavated within the grading and construction footprint of the proposed project. No evidence of traditional Hawaiian or early historic cultural deposits were found. Based on the field work and assessment by Garcia and Associates, it was determined that the proposed project will result in "no historic properties affected" and no further archaeological work is recommended. Refer to **Appendix "F"**, Archaeological Assessment Report.

The SHPD approved the Archaeological Assessment Report via letter dated October 6, 2015 and noted *"No further archaeological work is recommended for this project area."* See **Appendix "F-1"**.

In the event any remains are encountered during construction, activities will be halted in the immediate area of the find and SHPD will be contacted to determine appropriate mitigation measures.

## 7. Cultural Assessment

### a. Existing Conditions

#### (1) Historical Overview

The Cultural Impact Assessment (CIA) prepared for the project by Garcia and Associates, noted that paleoenvironmental studies of Moloka'i suggest that human colonization of the island occurred between AD 800 and 1200. The first evidence of temporary occupation along Moloka'i's leeward coast was collected in a sandy midden in the area of the current Mālama Cultural Park located northwest of the project area. See **Appendix "G"**. The CIA noted that during Moloka'i's Late Expansion Period (AD 1400-1650), there is strong archaeological evidence for the increased use of subsistence practices, increase in population and early evidence of ritual practices (McCoy 2007).

The Proto-Historic Period (AD 1650-1795) brought internal wars for control of Moloka'i between the Ko'olau and Kona chiefs. The source of conflict may have arisen due to the significant economic advantage that Moloka'i's rich fishing area on the southeast coast provided (Athens 1985:6). Control over the island shifted over time, but ultimately Chief Kahekili of Maui secured power over the lands from forces on O'ahu (Kamakau 1961:133).

The CIA report noted that the Kapa'akea ahupua'a did not figure prominently in the traditional Hawaiian literature. The small ahupua'a appeared to be in the shadow of the Kaunakakai ahupua'a to the west. The report notes that the Kaunakakai ahupua'a has many references in historic and cultural references. Refer to **Appendix "G"**.

## (2) Post-Contact Period

In November 1778, sailors from Captain Cook's expedition were the first Europeans to sight Moloka'i island. Other contact with Europeans continued, however, in 1790 the war for the unification of all the Hawaiian islands by Kamehameha I was in progress. During this time, Kapa'akea was the site of Chief Kalanimoku's camp. Refer to **Appendix "G"**.

During the Great Mahele in the mid-19th century, as noted in the CIA report, no kuleanas were awarded in the Kapa'akea ahupua'a. The lands remained unassigned until 1890, when all unassigned lands were declared royal domain by the Crown Land Commissioners through legislation (Indices 1929:23). In 1855, the entire Kapa'akea ahupua'a was conveyed to Lot Kapuāiwa (Kamehameha V). Refer to **Appendix "G"**. Eventually, the Kapa'akea ahupua'a was acquired by a group of Honolulu investors who formed Moloka'i Ranch and purchased 70,000 acres of Kamehameha V's former landholdings. The investors who established Moloka'i Ranch formed the American Sugar Company (ASCO) a year after purchasing the lands. ASCO attempted to commercialize sugar cane on Moloka'i and maps from the company note that cane fields included lands within the Kapa'akea ahupua'a. The sugar industry was short lived on Moloka'i due to the supply of fresh water needed for the cane cultivation. Refer to **Appendix "G"**.

## (3) Kapa'akea Homestead

In 1920, the U.S. government passed the Hawaiian Homes Commission Act which provided a means for Native Hawaiians who were at least half Hawaiian or 50 percent blood quantum to acquire land on which to build homes and farm. The Hawaiian Homes Commission Act specifically designated public lands to the Hawaiian Homes Commission which excluded: (1) all lands within any forest reserve; (2) all cultivated sugar lands; and (3) all public lands held under certificate of occupation, right of purchase lease, or special homestead agreement. Moloka'i served as the staging ground for the program with 2,000 acres available specifically in Kapa'akea Ahupua'a.

The lands provided to the Hawaiian Homes Commission for homesteading proved to be the least desirable lands for development. However, Prince Kuhio indicated he was satisfied with the lands chosen for the Hawaiians at Commission hearings. In a letter written by A. Horner, addressed to Senator Poindexter, the Kapa'akea lands provided to the Hawaiian Homes Commission for homesteading were described as worthless for agriculture (Spitz 1964:8). In 1924, F.G Krauss, the Chairman of the Classification Commission, also described the homesteading lands of Kapa'akea, Kamiloloa 1 and 2, and Makakupaia 1 as:

> *Second class pasture land. "...one of the poorest areas of land that we have inspected. It is very dry, rough, and rocky." Couldn't carry over 100 cattle, perhaps only part of the year. Estimated cost of making domestic water available, $10,000 (Spitz 1964:13).*

Refer to **Appendix "F"**, Archaeological Assessment Report.

**(4) Local History and Resident Interviews**

In April 2016, Garcia & Associates prepared a Cultural Impact Assessment (CIA) for the proposed project. Refer to **Appendix "G"**. As part of this CIA, consultation was sought from the *kūpuna* of the Kapa'akea community, or those who possess the longest living history of the area. Cultural interviewees were selected primarily through the assistance of the Kapa'akea Homestead Association and the Ho'olehua Hawaiian Civic Club. Three (3) cultural interviewees, Doreen Gaspar, Georgette Kaneakua, and Leilani Wallace, were asked about historical land use and cultural practices relating to the project area. Mrs. Gaspar is the President of the Kapa'akea Homestead Association. A driving tour of the area and a site visit to the proposed project location were also conducted. Information gathered during the course of these consultations is organized by topic as follows.

**(i) <u>Marine Resources: Gathering and Fishing</u>**

Fishing and gathering of marine resources is among the top concerns of Kapa'akea Hawaiian Homestead's native

Hawaiian residents. Kapa'akea Ahupua'a has approximately one (1) kilometer of coastline which originally supported salt flats and a fishpond. Nearshore waters provide excellent gathering and fishing grounds extending out approximately one (1) mile from the shoreline. Georgette Kaneakua practices traditional marine gathering and reef gleaning, collecting mollusks and many varieties of limu from the waters fronting Kapa'akea Homestead. Ms. Kaneakua said that marine gathering is an important and common cultural practice shared by many members of the community. In addition, fishing via hook and line, net, and spear are all regular practices in nearby waters. Many DHHL Homestead residents launch shallow-draft boats directly along the waterfront.

**(ii) Fresh Water Springs**

Kapa'akea once contained a freshwater spring just mauka of the shoreline, along the perimeter of Kapa'akea Fishpond. The cultural interviewees were aware of the existence of a spring in the past, but it appears to have been destroyed when Kapa'akea Fishpond was filled in.

**(iii) Religious-Spiritual Activities**

Consultants were not aware of any traditional religious spiritual sites, such as heiau or iwi *kūpuna*, in or around the project area, and suggested that iwi *kūpuna* would more likely be located mauka. Leilani Wallace did express concern for the maintenance of mauka-makai cultural pathways, which she believes run alongside the former river courses, which are currently drainage ditches running through the DHHL Homestead area. She related an anecdote about a neighbor who had blocked one (1) of the waterways with a large pōhaku, and a spike in sickness and ill health in the community followed. When the stone was removed, the situation returned to normal. Mrs. Wallace felt that such considerations should be kept in mind when designing projects that may affect cultural pathways.

### (iv) Salt Gathering

Although salt deposits are present in the area to the west of the proposed project area, salt gathering was not identified by cultural interviewees as a current cultural activity. They did not express any concern about this resource with regards to the proposed flood control project.

### (v) Places of Traditional Importance

Interviews with the cultural consultants did not identify any places of traditional importance in or around the project area. The entire project area is located entirely on land reclaimed during the 20th Century. Kapa'akea was an area previously associated with ruling ali'i, and the former small bay (now filled) was noted as a place to beach their canoes. This historical association is significant to those who live in the area, but is not a resource that will be impacted by the proposed project.

## b. Potential Impacts and Proposed Mitigation Measures

As part of the CIA, three (3) individuals from the Moloka'i community and familiar with the area were interviewed to assess potential impacts the project may have on cultural resources and practices. Refer to **Appendix "G"**. The CIA concluded that the project would have no significant impact on traditional Hawaiian cultural practices or resources. Cultural interviewees indicated that marine resource collection would not be affected by the project. The proposed flood mitigation wall follows the western boundary of the neighborhood, perpendicular to the shoreline, creates no access impediment to the local waters, and is not expected to impact the nearshore marine resources. There is no active use of a freshwater spring that is located a significant distance from the proposed project, as such, there would be no impact. No cultural practices or spiritual sites such as heiau were identified that would be adversely impacted by the proposed project. Mauka/makai pathways in the area are located east of the proposed project area and would not be affected. Salt gathering, though not identified as a significant cultural activity, is not anticipated to be affected adversely by the proposed project. While this area does have notable historical associations as a canoe landing place, the landscape has been extensively

altered and the former small bay and canoe landing no longer exist. No traditional places of importance are expected to be impacted by the proposed work.

## 8. Air and Noise Quality

### a. Existing Conditions

There are no major stationary sources of air pollution in the Kapa'akea area. With the small-town scale of residential uses in Kapa'akea and prevailing trade wind conditions, air quality is generally good in this area of Moloka'i. The primary source of emissions in the vicinity may be attributed to motor vehicles traveling in the area. However, these mobile sources have no adverse influence on air quality.

There are no significant noise generators in the vicinity of the project area. Noise generated in this locale may be attributed to traffic along Maunaloa Highway, Kamehameha V Highway, and other local roadways.

### b. Potential Impacts and Proposed Mitigation Measures

Airborne particulates, including dust, may be generated during site preparation and construction activities. However, BMPs for dust control measures, such as a dust fence, regular watering and sprinkling, will be implemented as needed to minimize wind-blown emissions. Refer to **Appendix "A"** and **Appendix "B"**.

As with air quality, ambient noise conditions will be temporarily impacted by construction activities. Heavy construction equipment, such as front end loaders, dump trucks, and trailers will be the dominant source of noise during site construction. In this context, BMPs such as regular maintenance of equipment, inspection of mufflers on equipment and scheduling of construction activity will be applied during construction to minimize adverse noise impacts. The contractor will coordinate with the State Department of Health to ensure that noise permits are obtained, as appropriate.

With the implementation of these BMPs, the proposed project is not expected to adversely impact local and regional air quality and ambient noise quality.

Upon completion, the proposed flood mitigation improvements will not impact local or regional air quality or ambient noise quality.

## 9. Streams and Wetlands

### a. Existing Conditions

Kōheo Wetland, which is adjacent to the five (5) DHHL Homestead lots, is located in a low spot on the coastal plain at the boundary between Kaunakakai and Kapa'akea. It is fed by ground water, local rainfall and receives runoff from a small ephemeral unnamed gully above the highway. It only flows during heavy rainfall events. When this gully reaches the coastal plain it disappears and any runoff spreads out as sheet flow. At the Kamehameha V Highway, the water accumulates as temporary ponding due to inadequate drainage features until it over flows down slope into the wetland. See **Appendix "H"**, Wetland Study.

The Kapa'akea Homesteads were established along the coastal plain, with the first lots being awarded in 1950. The lots adjacent to the wetland were lower in elevation and were prone to periodic temporary flooding during high rainfall events. Fill material was brought in and spread on these lots to build up the surface elevations one (1) to two (2) feet to minimize flood damages. This resulted in a clear, rather straight boundary line that slopes down into the wetland from the DHHL lots. The proposed construction of a concrete wall is intended to eliminate this threat. Refer to **Appendix "H"**.

The entire Kōheo Wetland was delineated in a 2005 study that was submitted to the U.S. Army Corps of Engineers. The 2005 study found the eastern boundary of the wetland to roughly approximate the lower toe of the slope below the DHHL boundary. This study, however, has exceeded its 5-year sunset date and a portion of the eastern boundary is reassessed for any potential recent changes relative to the project boundary. Refer to **Appendix "H"**, Wetland Study.

### b. Potential Impacts and Proposed Mitigation Measures

Robert Hobdy prepared a report summarizing the findings of a wetland determination process in accordance with the Corps of Engineers Wetlands Delineation Manual (1987) and the Regional Supplement to the Corps of Engineers Wetland Delineation Manual: Hawaii and Pacific Islands Regional (2012). Refer to **Appendix "H"**, Wetland Study.

Six (6) sampling points were established slightly outside the west boundary of the project area in a line running from below the Kamehameha V Highway down toward the shoreline. Each of these were analyzed for wetland characteristics as described above. Sampling points 1 through 5 were found to lie just outside the margin of the wetland, while sampling point 6 was just within the margin of the wetland. From this information, a proposed wetland boundary was determined. This wetland boundary line lies entirely outside of the DHHL Kapa'akea Flood Mitigation Project boundary by distances ranging from 20 feet at the top to 8 feet near the shoreline.

The proposed project area, delineated by five (5) DHHL Homestead lots totaling 2.5 acres in area, lies on a coastal plain between two (2) gullies that drain into the Pacific Ocean. To the west is a small unnamed ephemeral gully that drains about 50 acres of land on the slopes of Pu'u Maninikolo and terminates at the Kōheo Wetland adjacent to the shoreline. To the east is a larger unnamed ephemeral gulch that drains about 250 acres above the Kapa'akea Cemetery and runs through the DHHL Kapa'akea Homesteads to the ocean.

An 11-acre area between the two (2) adjacent drainages lies on nearly level land on the coastal plain and includes five (5) acres of undeveloped grass land and kiawe (*Prosopis pallida*) forest above Kamehameha V Highway and six (6) acres of the residential Kapa'akea Homesteads community below the highway to the shoreline. This 11-acre area has no drainage channels and no wetlands. The 2.5-acre project area lies wholly within this 11-acre area. Robert Hobdy's study found the boundary of Kōheo Wetland lies entirely outside the western side of the project area. The unnamed drainage gully to the east has no wetlands associated with it.

The report concluded that the entire 2.5-acre DHHL Kapa'akea Flood Mitigation project is determined to be an upland site with no aquatic resources that would qualify it as a Waters of the U.S. Refer to **Appendix "H"**, Wetland Study. The Army Corps of Engineers provided comments on the proposed project and DHHL will continue to consult with them on permitting regulations, as applicable.

The project plans will include water pollution prevention measures, temporary and permanent erosion control measures, and BMPs, such as installing silt fencing, watering of exposed areas, and installation of berms

and absorption materials areas for construction vehicles to prevent pollutants from discharging into State waters, to mitigate potential adverse impacts to downstream and nearby properties. Refer to **Appendix "B"**. As such, the proposed project is not anticipated to significantly adversely impact any of the region's riparian resources, wetlands, or streams.

## 10. Water Quality

### a. Existing Conditions

The five (5) Homestead lots are located eastward of a vacant wetland area and one (1) of the lots, Parcel 9, is a shoreline parcel. Currently, during storm events, these subject lots are exposed to flooding conditions from both onsite runoff and offsite runoff from the nearby Kamiloloa Stream. Also, during these storm events, the neighboring wetland is influenced by the wet weather event and exposes the Homestead lots to flooding. The proposed mitigation project is intended to protect the subject properties from flood conditions during storm events.

### b. Potential Impacts and Proposed Mitigation Measures

Project design relies on the existing topography for the new swale and the natural swale and the natural filtering process of the existing wetlands for stormwater flow. The low impact development design minimizes significant adverse impact to the coastal environment as the wetland functions to remove and settle sediments carried by stormwater flow.

The proposed project involves the implementation of an Erosion Control Plan and BMPs during construction to mitigate construction related impacts. BMP measures include control of fugitive dust from entering water bodies, wash-out of concrete trucks offsite to avoid discharge into water bodies, construction of berms, sandbags, filter fences, catchments as needed to contain/filter stormwater runoff. If during construction, State water quality standards are exceeded, all construction activities that are identified as contributing to adverse impacts to water quality will be immediately halted. The causes shall be established, and if related to construction activity, remedial action will be taken to address the problem prior to commencing work. Refer to **Appendix "A"**, Engineering Report. The State Department of Health, Clean Water Branch provided preliminary comments on the project. DHHL will continue to consult with the Clean

Water Branch on permitting as the project proceeds. The project footprint is combined to approximately 0.17 acre and with the implementation of erosion control and BMP measures the proposed action is not anticipated to significantly adversely affect water quality in the short term and long term.

## 11. Scenic and Open Space Resources

### a. Existing Conditions

The project site is located eastward of Kaunakakai Town, south of Maunaloa Highway and Kamehameha V Highway. The project area is relatively flat and gradually slopes to the south towards the ocean. A wetland area borders the project area to the west.

### b. Potential Impacts and Proposed Mitigation Measures

The proposed project involves the removal of existing chainlink fence and stacked rubble wall, and replacement with a new CMU wall approximately four (4) feet high and swale. The major portion of the proposed wall will be oriented in a mauka-makai direction along the west boundary of the five (5) Homestead lots. The smaller northern segment facing Kamehameha V Highway will be installed in front of existing residential structures. As such, the proposed project will not have a substantial, adverse impact to existing views, nor will it adversely impact open space resources in the region.

## 12. Traditional Beach and Mountain Access

### a. Existing Conditions

The project area is located between the coastline and Kamehameha V Highway. There is an existing beach access through the Hawaiian Homestead subdivision in the vicinity of the project area.

There are no traditional mountain access trails in the vicinity of the project site.

### b. Potential Impacts and Proposed Mitigation Measures

The proposed project is limited to flood mitigation improvements intended to protect five (5) Homestead lots during storm events. Existing beach access provided in the vicinity of the project area will not be impacted. As

there are no mountain access trails in the vicinity of the project, no adverse impacts to traditional beach or mountain access is anticipated as a result of the proposed project.

# B. SOCIO-ECONOMIC ENVIRONMENT

## 1. Population and Economy

### a. Existing Conditions

The resident population of the island of Moloka'i (excluding Kalawao), as determined by the 2010 Census, was 7,255. In the year 2000, the resident population was 7,257, representing no increase in population during the ten year period (U.S. Census 2010). Moloka'i island population is projected to increase to 7,772 in 2020 and 8,395 in 2030 (Maui Planning Department, 2006).

On Moloka'i, there is still a large number of unemployed workers, compared to the rest of Maui County. In March 2016, the unemployment rate (not seasonally adjusted) was 3.4 percent for Maui County and 5.6 percent for Moloka'i. The unemployment rate decreased 0.7 percent for Maui County, and decreased 2.3 percent for Moloka'i, respectively, since March 2014 when it was 4.1 percent for Maui County and 7.9 percent on the island of Moloka'i (State of Hawai'i, Department of Labor and Industrial Relations, April 2016).

### b. Potential Impacts and Proposed Mitigation Measures

In the short term, the proposed project will generate positive economic impacts on a limited basis given the scope of the project associated with construction-related spending and employment. From a long term perspective, the project is intended to benefit and protect the five (5) DHHL Homestead lots from flooding during storm events. Adverse economic impacts are not anticipated with project implementation. There are also no long term impacts on population parameters associated with the project.

# C. PUBLIC SERVICES

## 1. Police and Fire Protection

### a. Existing Conditions

Police services on Moloka'i are provided by the Maui County Police Department. The Moloka'i station is located in the Mitchell Pauole Center in Kaunakakai.

Fire prevention, protection and suppression services are provided by the Maui County Department of Fire and Public Safety. The Fire Department maintains stations in Kaunakakai and Ho'olehua, with a substation in Pūko'o.

### b. Potential Impacts and Proposed Mitigation Measures

The proposed improvements are not anticipated to adversely impact existing police and fire protection services. The project site is located on the edge of Kaunakakai Town and is currently within the service area of police and fire protection.

## 2. Medical Facilities

### a. Existing Conditions

Moloka'i General Hospital, which is operated by the Queen's Health Systems, is the only major medical facility on the island. Licensed for 15 beds, the hospital located in Kaunakakai provides acute, emergency, and obstetrics care services (Maui County Data Book, 2014). The hospital also houses the Women's Health Center, which offers family planning services and prenatal care to local residents.

Other medical facilities include the Moloka'i Family Health Center in Kaunakakai.

### b. Potential Impacts and Proposed Mitigation Measures

The proposed action is limited to flood mitigation system improvements to protect five (5) Homestead lots and is not anticipated to have adverse impacts on existing medical facilities or services on Moloka'i.

## 3. Solid Waste

### a. Existing Conditions

Except for remote areas, single family solid waste collection service is provided by the County of Maui once weekly.

Solid waste is collected by County refuse collection crews and disposed at the County's Moloka'i – Nā'iwa landfill. Commercial waste from private collection companies is also disposed of at the landfill. The landfill includes a recycling center and metals facilities for residents and businesses.

### b. Potential Impacts and Proposed Mitigation Measures

The proposed improvements are not anticipated to adversely impact existing solid waste services on Moloka'i. Solid waste from construction work will be disposed at an approved solid waste facility. Upon completion, the proposed project will not generate additional solid waste. Per comments from the County Department of Environmental Management, the contractor will be required to coordinate with them on construction waste and potential recycling options.

## 4. Recreational Resources

### a. Existing Conditions

The island of Moloka'i offers a wide range of recreational opportunities. Possible outdoor activities include bicycling, boating, canoeing, camping, diving, fishing, golfing, hiking, horseback riding, hunting, surfing, swimming, tennis, and windsurfing.

The Moloka'i Yacht Club and Malama Cultural Park, a 3.3-acre park with open fields, an amphitheater, and restroom facilities, are located westward of the project site approximately one (1) mile away. Other recreational facilities within Kaunakakai include the Mitchell Pauole Community Center, Cook Memorial Pool, Duke Maliu Regional Park, Kakahaia Park, Kaunakakai Ball Park, Kilohana Community Center, One Ali'i Park, and Pu'u Hauole Park.

### b. Potential Impacts and Proposed Mitigation Measures

In the long term, the proposed improvements are not anticipated to adversely impact the existing recreational facilities located in the region nor increase the demand for recreation resources as it is limited to infrastructural improvements. Construction work is limited to the five (5) DHHL Homestead lots.

## 5. Educational Facilities

### a. Existing Conditions

There are five (5) public schools on Moloka'i. Four (4) are public elementary schools, Kaunakakai, Kilohana, Kualapu'u, and Maunaloa, providing elementary school education for children from Kindergarten through Grade 6. There is one (1) secondary school, Moloka'i High and Intermediate School, located in Ho'olehua. School capacity and enrollment over recent years are summarized in **Table 1**.

**Table 1.** Enrollment for Molokai Schools

| School | Enrollment 2014-2015 School Year | Enrollment 2015-2016 School Year |
|---|---|---|
| Kaunakakai Elementary School (Grades K-6) | 274 | 272 |
| Kilohana Elementary School (Grades K-6) | 65 | 71 |
| Maunaloa Elementary School (Grades K-6) | 55 | 55 |
| Kualapu'u Elementary School (Charter School – Grades K-6) | 306 | 286 |
| Moloka'i Intermediate School (Grades 7-8) | 197 | 156 |
| Moloka'i High School (Grades 9-12) | 353 | 291 |
| State of Hawai'i, Department of Education, 2016. | | |

Private schools include Moloka'i Christian Academy (Grades Kindergarten-12) and Moloka'i Mission School (Grades 1-8).

Moloka'i Education Center, a satellite facility of University of Hawai'i - Maui College, offers post-secondary, vocational and technical University of Hawai'i credit courses, and is located at the intersection of Alanui Ka Imi Ike and Kamehameha V Highway.

### b. Potential Impacts and Proposed Mitigation Measures

The proposed project is not a population generator. As such, it is not anticipated to adversely impact existing education facilities or services on Moloka'i.

## D. INFRASTRUCTURE

### 1. Roadways

#### a. Existing Conditions

The State of Hawai'i's Maunaloa Highway links Kaunakakai Town with the western portion of the island. Maunaloa Highway becomes Kamehameha V Highway at Kaunakakai Place and extends toward and along the shoreline, providing access to eastern portions of Moloka'i. Kaunakakai Place, a State owned roadway, runs from its intersection with Maunaloa Highway and Kamehameha V Highway south to the coast and along a causeway to the Kaunakakai Harbor and Ferry Terminal. Beyond Kaunakakai Town to the east is two (2) lane State-owned Kamehameha V Highway. Kapa'akea Loop Road intersects with Kamehameha V Highway and is a two (2) lane DHHL roadway that provides access into the Hawaiian Homestead subdivision which contains the five (5) subject properties.

#### b. Potential Impacts and Proposed Mitigation Measures

The proposed project will involve the removal of the existing chainlink fence and stacked rubble wall that are located on the west and north borders of the five (5) DHHL Homestead lots and installing a new CMU wall and swale. The proposed CMU wall will provide a barrier between the five (5) DHHL Homestead lots and the wetland area to the west. Access to the five (5) DHHL Homestead lots is via Kapa'akea Loop Road, off of Kamehameha V Highway. During the construction period, traffic on these roadways will not be significantly affected by construction vehicles and equipment. To mitigate adverse impacts from construction activities, a traffic control plan will be developed as part of the construction plan design details for the project to ensure that access for residences and businesses is maintained and to provide for smooth traffic flow.

Upon completion, the project will not adversely impact traffic conditions in the vicinity. The project plans include a drainage swale which is designed

to allow stormwater to flow to the Kōheo wetland area rather than Kamehameha V Highway. The proposed project will improve flooding conditions and significant adverse impacts to the five (5) DHHL Homestead lots during periods of heavy rain.

## 2. Water System

### a. Existing Conditions

The County of Maui operates four (4) water systems at 'Ualapu'e, Kaunakakai, Kala'e, and Hālawa on the island of Moloka'i. Moloka'i Ranch also operates water systems serving households in West Moloka'i. The project site is located within the Kaunakakai Water System service area.

### b. Potential Impacts and Proposed Mitigation Measures

The proposed project is limited to flood mitigation improvements and will not require potable water service. As such, adverse impacts to the County's and Moloka'i Ranch's water supply and water systems are not anticipated as a result of the proposed project. Waterlines in the vicinity of the project area will not be impacted from the project. BMPs will be incorporated during construction to protect groundwater resources in the area.

## 3. Wastewater System

### a. Existing Conditions

Most regions of Moloka'i are not served by a wastewater treatment system. Residents situated beyond the Kaunakakai service area utilize either cesspools or septic systems. Within Kaunakakai, the County operates a single wastewater treatment plant located west of the project site. Moloka'i Ranch also operates a wastewater treatment system serving households in West Moloka'i.

### b. Potential Impacts and Proposed Mitigation Measures

The proposed project is limited to flood mitigation improvements and will not generate wastewater. As such, adverse impacts to the County's and Moloka'i Ranch's wastewater system are not anticipated as a result of the proposed project. Existing sewerlines within Kamehameha V Highway and

Kapa'akea Loop Road will be avoided during the construction of the proposed drainage improvements.

## 4. Drainage

### a. Existing Conditions

There is no municipal drainage system near the project site.

The DHHL Moloka'i Island Plan discusses that residents of the five (5) DHHL Homestead lots experience severe flooding events on an annual basis due to their location in the coastal area. Refer to **Appendix "A"**, Engineering Report. In 1976, the U.S. Army Corps of Engineers assessed the installation of a diversion ditch north of the Kamehameha V Highway and improvements to the drainage channel under the highway leading in the Kapa'akea Makai DHHL neighborhood, however, funding has not been allocated for these improvements. The Final Environmental Statement (1976) for that drainage project states that the most significant flood occurred during October 31st through early November in 1961 when the DHHL Homestead lots were inundated by approximately two (2) feet of water, which deposited approximately one (1) foot of mud on the lots. During the height of that storm, Kamehameha V Highway was under three (3) feet of water. To protect the existing residences located on the subject lots, DHHL proposes flood mitigation measures. Refer to **Appendix "A"**, Engineering Report. The proposed improvements would meet the needs and protect the five (5) lots from flooding conditions during storm events.

### b. Potential Impacts and Proposed Mitigation Measures

The Engineering Report noted that Kamiloloa Stream will receive a peak stormwater runoff of 2,525 cubic feet per second (cfs) for a 10-year storm. Based on the project area of 2.5 acres and the total area of 21.6 acres near the stream, a runoff of approximately 303 cfs will enter the project site. The proposed project will divert this flow to the Kōheo wetland area, west of the project area and ocean via the new swale.

The existing onsite flow is attributed from water that falls on each of the five (5) DHHL Homestead lots during rain events, in addition to the offsite stormwater that overflows from Kamiloloa Stream. The property north of Kamehameha V Highway are owned by DHHL, Moloka'i Properties, and the County of Maui. Kamiloloa Stream bisects the DHHL property and is

diverted around the County of Maui property. See **Figure 11**. Refer to **Appendix "A"**.

The project is near the mouth of Kamiloloa Stream and next to the Kōheo wetland and Pacific Ocean. The surface water received at the stream mouth spills over and through the parcels to the ocean. The lowest points are the ocean-front lands and the adjacent Kōheo Wetlands. The proposed onsite runoff will be the same as the pre-development onsite runoff. To mitigate from the offsite runoff during storm events, a CMU wall with swale is proposed along the property line. The project design is intended to prevent flooding of the existing five (5) DHHL Homestead lots while allowing the flow from the project site to Kōheo Wetlands. Refer to **Appendix "A"**. Based on the concept of low impact development, the project design includes a new swale that incorporates the existing topography and natural filtering process of the existing nearby wetlands and minimize environmental impacts (State of Hawai'i, 2006). To minimize environmental impact, the project is confined to a footprint (approximately 0.17 acre) on the project site which contains an existing chainlink fence and stacked rubble wall that will be replaced with the proposed new CMU wall and swale. Project design is based on the County of Maui, Department of Public Works "Rules for the Design of Storm Drainage Facilities in the County of Maui", November 1995.

As previously discussed, the project includes erosion control measures and BMPs during construction as mitigative measures to avoid significant adverse impacts to the environment and nearby properties (State of Hawai'i, 2013).

It is noted that the U.S. Army Corps of Engineers in 1976 proposed a 1,800 foot long channel with diversion levees mauka of the highway and improving the drainage channel under Kamehameha V Highway heading into the DHHL Homestead Kapa'akea Makai neighborhood, however, funding has not been allocated for this improvements. Refer to **Appendix "A"**.

The proposed improvements are not anticipated to have significant adverse impacts to drainage, as it is intended to provide a protective measure from the flooding of the subject lots during heavy rainfall. Refer to **Appendix "A"**.

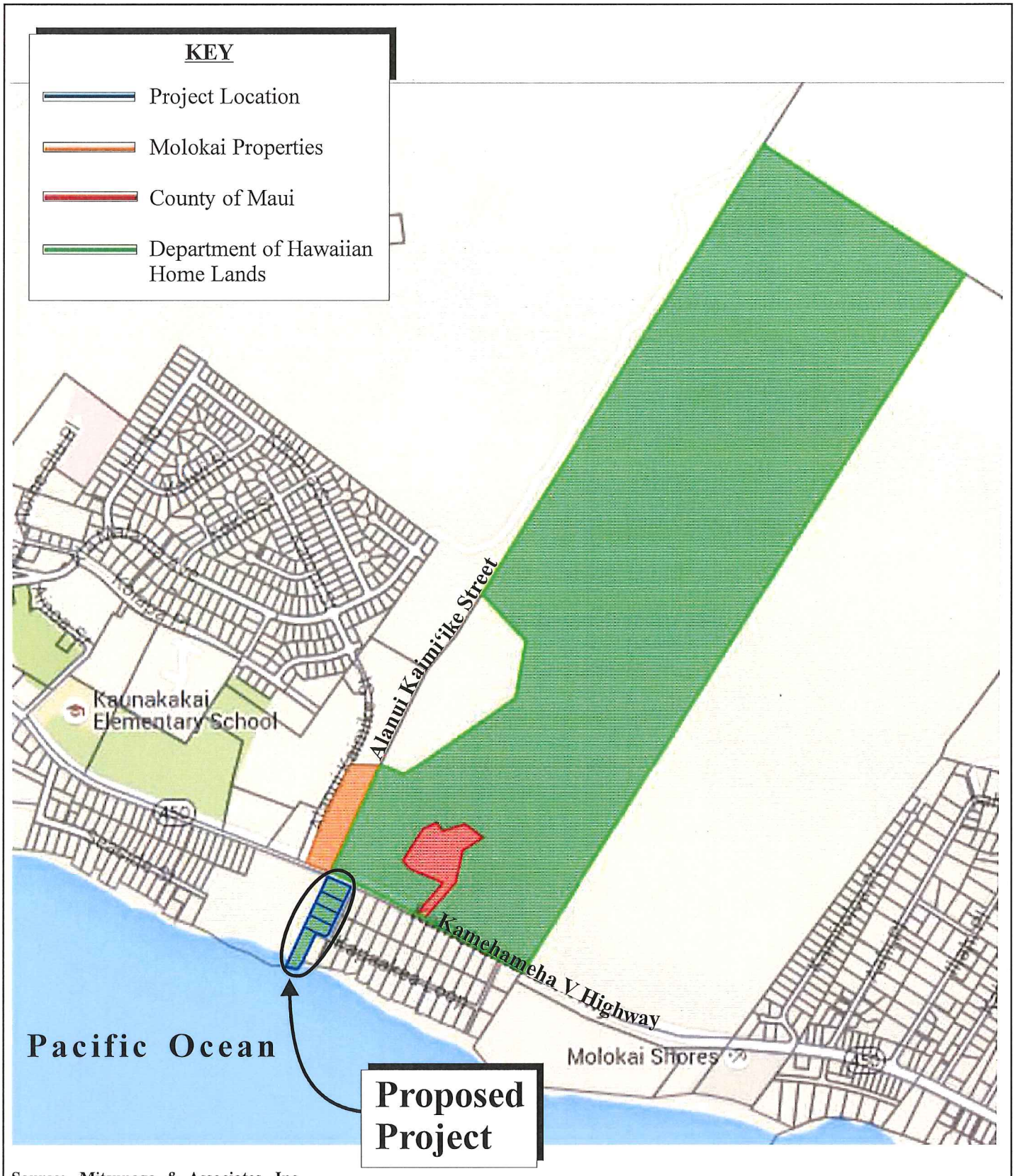


Source: Mitsunaga & Associates, Inc.

# Figure 11 Proposed Department of Hawaiian Home Lands Kapa'akea Flood Mitigation Improvements
## Mauka Property Owners

NOT TO SCALE

Prepared for: State of Hawai'i, Department of Hawaiian Home Lands

MUNEKIYO HIRAGA

MAI\DHHL Kapaakea EA 1900\Applications\Figures\MaukaOwners

### 5. Electrical, Telephone, and Cable Television

#### a. Existing Conditions

Electrical and telephone services in Kaunakakai are provided by Maui Electric Company, Ltd. (MECO) and Hawaiian Telcom. Cable television is provided by Oceanic Time Warner Cable (Oceanic).

#### b. Potential Impacts and Proposed Mitigation Measures

The proposed project will not require electrical, telephone, or cable television services. There are no underground MECO electrical facilities and cable television in the project alignment.

## E. CUMULATIVE AND SECONDARY IMPACTS

Pursuant to Section 11-200-2 of the Hawaii Administrative Rules, Chapter 200, entitled Environmental Impact Statement Rules, a cumulative impact means:

> *The impact on the environment which results from the incremental impact of the action when added to other past, present, and reasonably foreseeable future actions regardless of what agency or person undertakes such other actions. Cumulative impacts can result from individually minor but collectively significant actions taking place over a period of time*

The flood mitigation improvements are being proposed to protect five (5) DHHL Homestead lots from flooding during storm events while avoiding significant adverse impacts to the environment.

The proposed project is located adjacent to the urban area of Kaunakakai Town and would service five (5) existing developed DHHL Homestead lots, as it will alleviate flooding conditions associated with heavy rainfall. The proposed project is not part of a larger action and any cumulative impact of the flood mitigation project in this context is anticipated to be positive. The proposed new CMU wall and swale will divert the runoff from Kamehameha V Highway to the existing Kōheo wetland located west of the DHHL Homestead lots and serve as a barrier to prevent stormwater flow from the wetland onto the subject lots during storms. The proposed onsite runoff will be the same as the pre-development onsite runoff and the project improvements are confined to 0.17 acre. Adverse cumulative impacts are, therefore, not anticipated as a result of the proposed improvements which are intended to protect five (5) DHHL Homestead lots from flooding during heavy rainfall.

Secondary impacts are those which have the potential to occur later in time or farther in distance, but are still reasonably foreseeable. They can be viewed as actions of others that are taken because of the presence of a project. Secondary impacts from highway projects, for example, can occur because they can induce development by removing one of the impediments to growth.

With the proposed mitigation measures in place during construction, the project is not anticipated to have a significant adverse impact on the physical environment and is not a population generator. The project site is located within an existing developed area of DHHL Homestead lands in the region. The proposed project will improve the handling of stormwater flows in this area and protect the subject DHHL Homestead lots from flooding and mitigate significant adverse impacts to the environment. Furthermore, existing public service parameters will not be affected by project implementation. In summary, the proposed action is not anticipated to result in significant adverse secondary impacts.

# III. RELATIONSHIP TO LAND USE PLANS, POLICIES, AND CONTROLS

# III. RELATIONSHIP TO LAND USE PLANS, POLICIES, AND CONTROLS

## A. STATE LAND USE DISTRICTS

According to Chapter 205, Hawai'i Revised Statutes (HRS), the State Land Use Commission (SLUC) establishes four (4) major land use districts in which lands in the State are placed. These districts are "Urban", "Rural", "Agricultural", and "Conservation".

The proposed flood mitigation improvements on Parcels 9, 10, 11, 24, and 25 are located within the State "Urban" district. The proposed improvements on the subject properties are permitted uses in the "Urban" district pursuant to Chapter 205, HRS. See **Figure 12**.

## B. CHAPTER 226, HRS, HAWAI'I STATE PLAN

Chapter 226, HRS, also known as the Hawai'i State Plan, is a long-range comprehensive plan which serves as a guide for the future long-range development of the State by identifying goals, objective, policies, and priorities, as well as implementation mechanisms.

### OBJECTIVES AND POLICIES OF THE HAWAI'I STATE PLAN

The proposed action is consistent with the following objectives and policies of the Hawai'i State Plan:

**Chapter 226-13, HRS, Objectives and Policies for the Physical Envrionment – Land, Air, And Water Quality**

**226-13(b)(5), HRS:** *Reduce the threat to life and property from erosion, flooding, tsunamis, hurricanes, earthquakes, volcanic eruptions, and other natural or man-induced hazards and disasters.*

**Chapter 226-14, HRS, Objectives and Policies for Facilities Systems – In General**

**226-14(b)(1), HRS:** *Accommodate the needs of Hawaii's people through coordination of facility systems and capital improvements priorities in consonance with state and county plans.*

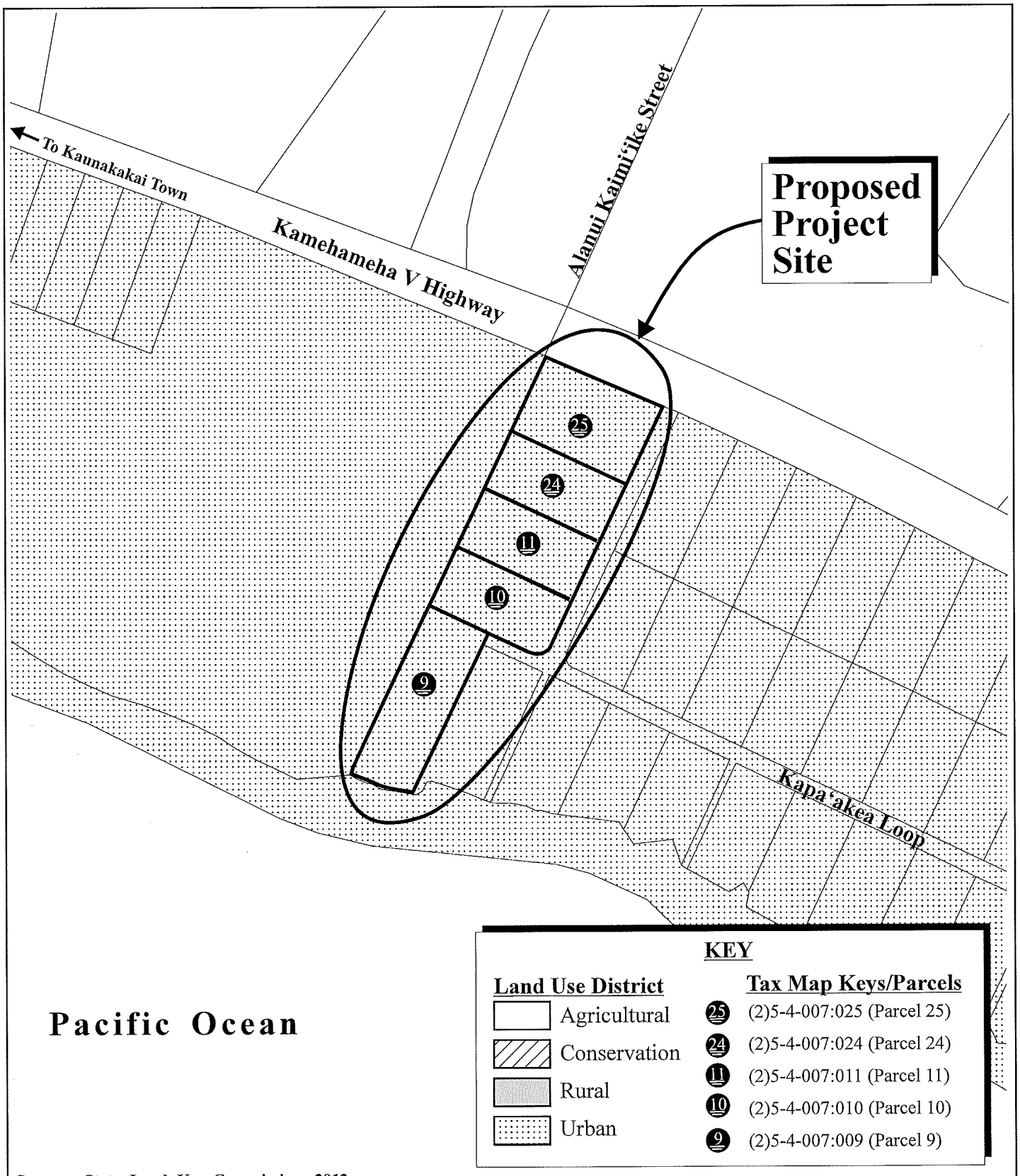


Source: State Land Use Commission, 2012

# Figure 12 Proposed Department of Hawaiian Home Lands Kapa'akea Flood Mitigation Improvements

## State Land Use District Map

0 100 Feet
50 200

Prepared for: State of Hawai'i, Department of Hawaiian Home Lands

MUNEKIYO HIRAGA

MAI\DHHL Kapaakea EA 1900\Applications\Figures\SLUD

**226-14(b)(3), HRS:** *Ensure that required facility systems can be supported within resource capacities and at a reasonable cost to the user.*

**Chapter 226-26, HRS, Objectives and Policies for Socio-Cultural Advancement-Public Safety**

**226-26(a)(1), HRS:** *Assurance of public safety and adequate protection of life and property for all people.*

**Chapter 226-27, HRS, Objectives and Policies for Socio-Cultural Advancement-Government**

**226-27(a)(1), HRS:** *Efficient, effective, and responsive government services at all levels in the State.*

## C. GENERAL PLAN OF THE COUNTY OF MAUI

As stated by the Maui County Charter, the purpose of the general plan is to:

> *... indicate desired population and physical development patterns for each island and region within the county; shall address the unique problems and needs of each island and region; shall explain opportunities and the social, economic, and environmental consequences related to potential developments; and shall set forth the desired sequence, patterns and characteristics of future developments. The general plan shall identify objectives to be achieved, and priorities, policies, and implementing actions to be pursued with respect to population density; land use maps, land use regulations, transportation systems, public and community facility locations, water and sewage systems, visitor destinations, urban design, and other matters related to development.*

Chapter 2.80B of the Maui County Code, relating to the General Plan and Community Plans, implements the foregoing Charter provision through enabling legislation which calls for a Countywide Policy Plan and a Maui Island Plan. The Countywide Policy Plan was adopted as Ordinance No. 3732 on March 24, 2010. The Maui Island Plan was adopted as Ordinance No. 4004 on December 28, 2012 and does not apply to Moloka'i island.

Regarding the Countywide Policy Plan, which includes Moloka'i, Section 2.80B.030 of the Maui County Code states:

> *The countywide policy plan shall provide broad policies and objectives which portray the desired direction of the County's future. The countywide policy plan shall include:*

1. *A vision for the County;*
2. *A statement of core themes or principles for the County; and*
3. *A list of countywide objectives and policies for population, land use, the environment, the economy, and housing.*

Core principles set forth in the Countywide Policy Plan are listed as follows:

1. *Excellence in the stewardship of the natural environment and cultural resources;*
2. *Compassion for and understanding of others;*
3. *Respect for diversity;*
4. *Engagement and empowerment of Maui County residents;*
5. *Honor for all cultural traditions and histories;*
6. *Consideration of the contributions of past generations as well as the needs of future generations;*
7. *Commitment to self-sufficiency;*
8. *Wisdom and balance in decision making;*
9. *Thoughtful, island appropriate innovation; and*
10. *Nurturance of the health and well-being of our families and our communities.*

In relation to these core themes, the Countywide Policy Plan has set goals, objectives, policies, and implementing actions that are identified as follows:

1. *Natural environment*
2. *Local cultures and traditions*
3. *Education*
4. *Social and healthcare services*
5. *Housing opportunities for residents*
6. *Local economy*
7. *Parks and public facilities*

8. *Transportation options*

9. *Physical infrastructure*

10. *Sustainable land use and growth management*

11. *Good governance*

With respect to the proposed flood mitigation project, the following goals, objectives, and policies will be expressed through the project's compliance with the Countywide Policy Plan.

**IMPROVE PHYSICAL INFRASTRUCTURE**

**Goal:**

*Maui County's physical infrastructure will be maintained in optimum condition and will provide for and effectively serve the needs of the County through clean and sustainable technologies.*

**Objective:**

*Improve the planning and management of infrastructure systems.*

**Policies:**

*Provide a reliable and sufficient level of funding to enhance and maintain infrastructure systems.*

*Ensure that basic infrastructure needs can be met during a disaster.*

The proposed project improves the existing drainage in the area with infrastructure that addresses flooding resulting from stormwater flows and protects the five (5) Department of Hawaiian Home Lands (DHHL) Homestead lots during wet weather events.

In summary, the proposed project is consistent with the themes and principal of the Countywide Policy Plan as noted above.

## D. MOLOKA'I COMMUNITY PLAN

Within Maui County, there are nine (9) community plan regions. From a General Plan implementation standpoint, each region is governed by a Community Plan which sets forth desired land use patterns, as well as goals, objectives, policies, and implementing actions for a number of functional areas, including infrastructure-related parameters.

The subject properties area located within the Moloka'i Community Plan region within "SF, Single Family" land use designation. Areas surrounding the project area are designated as "SF, Single Family", "MF, Multi Family", and "OS, Open Space". See **Figure 13**. The ten-year update of the Moloka'i Community Plan was initiated in 2010 by the Maui Planning Department and is currently in process.

The proposed project is consistent with the following goals, policies, and objectives of the Moloka'i Community Plan:

**ENVIRONMENT**

**Goal:**

*Preserve, protect and manage Molokai's exceptional natural land and water resources to ensure that future generations may continue to enjoy and protect the island environment.*

**Objectives and Policies:**

- *Protect and manage coastal water quality through best management land treatment practices.*
- *Encourage the development of environmentally sensitive drainage master plans which consider development opportunities and constraints in flood prone areas, stream channels and gulches.*

**DEPARTMENT OF HAWAIIAN HOME LANDS**

**Goal:**

*The timely implementation of programs and settlement of Native Hawaiians on Department of Hawaiian Home Lands.*

**Objective and Policy:**

- *Encourage the development of cooperative planning programs between the County and the Department of Hawaiian Home Lands to ensure that infrastructure and public service needs adequately address the needs of the entire Molokai community.*

## E. ZONING

According to Maui County Zoning, the proposed project site falls under the "Interim" District. The "Interim" Zoning Ordinance provides temporary regulations over areas pending the formal adoption of a comprehensive zoning ordinance and map which are deemed as necessary in order:

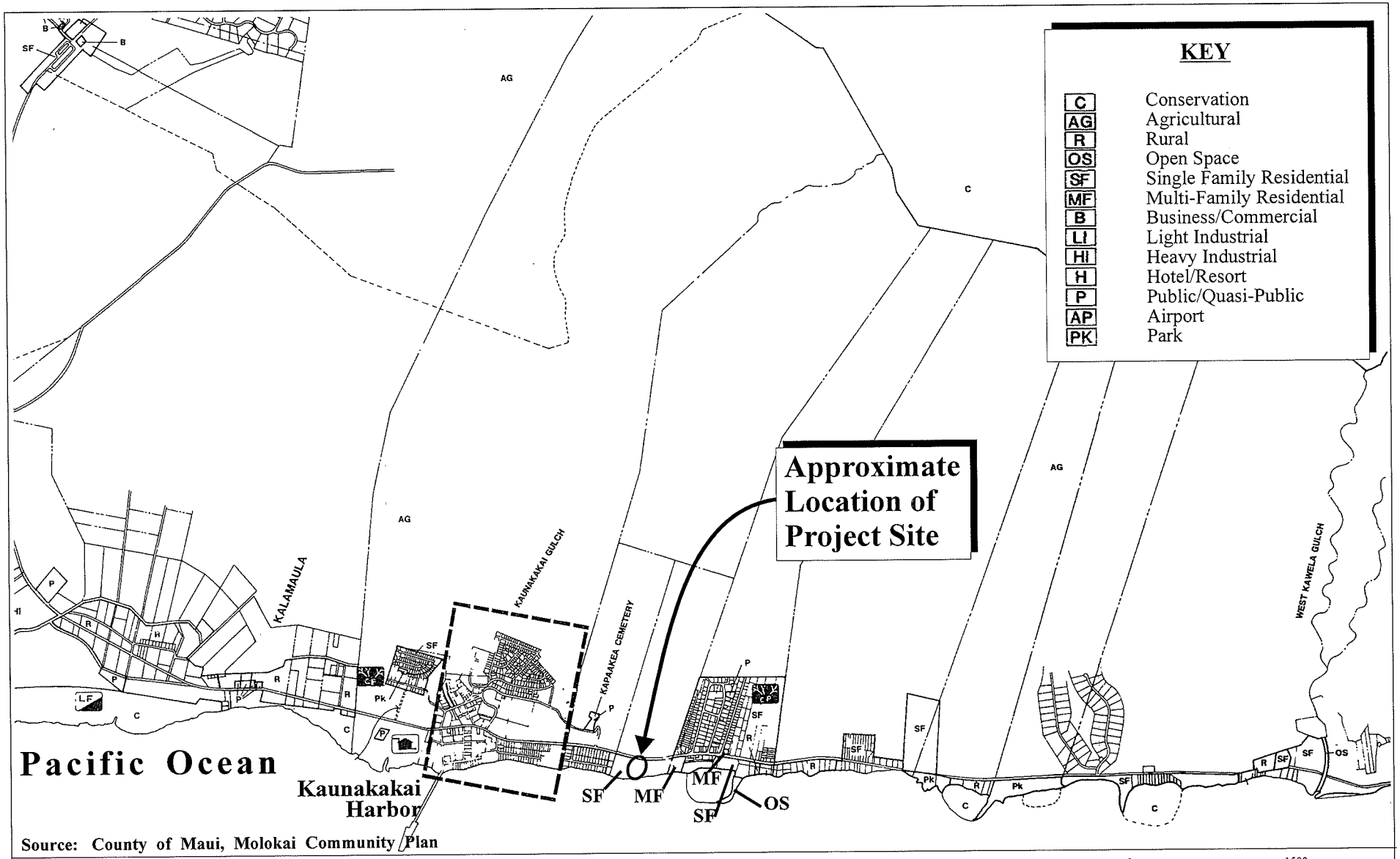


Source: County of Maui, Molokai Community Plan

# Figure 13 Proposed Department of Hawaiian Home Lands Kapa'akea Flood Mitigation Improvements

## Moloka'i Community Plan

1500 0 Feet 750 3000

Prepared for: State of Hawai'i, Department of Hawaiian Home Lands

MUNEKIYO HIRAGA

MAI\DHHL Kapaakea EA 1900\Applications\Figures\CommPlan

1. *To encourage the most appropriate use of land;*
2. *To conserve and stabilize the value of property;*
3. *To prevent certain uses that will be detrimental to existing uses; and*
4. *To promote the health, safety, and general welfare of the respective districts.*

Within the "Interim" zoning district, the construction of new or the expansion of existing parks, playgrounds, community centers, or public/quasi-public facilities that are owned or operated by private or governmental agencies is permitted. The proposed project is a public/quasi-public improvement owned by the State of Hawai'i, DHHL and is a permitted use in the "Interim" district. Although the improvements are permitted in the "Interim" zoning district, the DHHL is exempt from County zoning laws.

## F. SPECIAL MANAGEMENT AREA

The project site is located within the County of Maui's Special Management Area (SMA). Chapter 205A, HRS, and the SMA Rules and Regulations of the Moloka'i Planning Commission provide criteria and objectives, policies, and guidelines for establishing development within coastal areas.

Parcels 9, 10, 11, 24, and 25 are located within the County of Maui's SMA. As the project will be undertaken directly by DHHL on DHHL owned property, the County of Maui, Department of Planning determined that it does not have jurisdiction to require a SMA Permit for the proposed project. As previously noted, DHHL voluntarily analyzed the proposed action and found that it met the purpose and intent of the Moloka'i Shoreline Rules. Refer to **Appendix "C"**, Communication from Department of Planning.

## G. HAWAI'I COASTAL ZONE MANAGEMENT PROGRAM - OBJECTIVES AND ENFORCEABLE POLICIES

The Hawai'i Coastal Zone Management Program (HCZMP), as formalized in Chapter 205A, HRS, establishes objectives and policies for the preservation, protection, and restoration of natural resources of Hawai'i's coastal zone.

Although the proposed project is located within the County of Maui's Special Management Area (SMA), the project site is not subject to the SMA requirements, as the County of Maui determined it does not have jurisdiction over land owned by the State of Hawai'i DHHL. Nevertheless, this section addresses the project's relation within coastal zone management considerations, set forth in Chapter 205A, HRS.

## 1. Recreational Resources

**Objective:**

*Provide coastal recreational opportunities accessible to the public.*

**Policies:**

*a. Improve coordination and funding of coastal recreational planning and management; and*

*b. Provide adequate, accessible, and diverse recreational opportunities in the coastal zone management area by:*

*i. Protecting coastal resources uniquely suited for recreational activities that cannot be provided in other areas;*

*ii. Requiring replacement of coastal resources having significant recreational value including, but not limited to, surfing sites, fishponds, and sandy beaches, when such resources will be unavoidable damaged by development; or requiring reasonable monetary compensation to the State for recreation when replacement is not feasible or desirable;*

*iii. Providing and managing adequate public access, consistent with conservation of natural resources, to and along shorelines with recreational value;*

*iv. Providing an adequate supply of shoreline parks and other recreational facilities suitable for public recreation;*

*v. Ensuring public recreational uses of county, state, and federally owned or controlled shoreline lands and waters having recreational value consistent with public safety standards and conservation of natural resources;*

*vi. Adopting water quality standards and regulating point and nonpoint sources of pollution to protect, and where feasible, restore the recreational value of coastal waters;*

*vii. Developing new shoreline recreational opportunities, where appropriate, such as artificial lagoons, artificial beaches, and artificial reefs for surfing and fishing; and*

*viii. Encouraging reasonable dedication of shoreline areas with recreational value for public use as part of discretionary approvals or permits by the land use commission, board of land and natural resources, and county authorities; and crediting such*

*dedication against the requirements of Section 46-6.*

**Response:** Limited construction-related impacts are anticipated. Appropriate Best Management Practices (BMPs) will be implemented to mitigate construction related impacts. An Erosion Control Plan and BMPs are included in the project plans. Refer to **Appendix "B"**, Project Plans. The project incorporates the natural topography and the natural filtering process of the adjacent wetland. The proposed project is not expected to result in significant adverse impacts to existing coastal recreational resources.

**2. Historic Resources**

**Objective:**

*Protect, preserve and, where desirable, restore those natural and manmade historic and prehistoric resources in the coastal zone management area that are significant in Hawaiian and American history and culture.*

**Policies:**

*a. Identify and analyze significant archaeological resources;*

*b. Maximize information retention through preservation of remains and artifacts or salvage operations; and*

*c. Support state goals for protection, restoration, interpretation, and display of historic resources.*

**Response:** The subject properties were previously developed as DHHL Homestead lots for beneficiaries who currently occupy the existing residential homes. As previously discussed in Chapter II of this document, the Archaeological Assessment Report prepared by Garcia and Associates determined the project will result in "no historic properties" affected and recommended no further archaeological work. The State Historic Preservation Division (SHPD) concurred with the assessment and recommendation. Refer to **Appendix "F-1"**. As such, the proposed project is not expected to result in significant adverse impacts to historic resources. Should any inadvertent cultural historic resources be discovered during ground altering activities, all work will stop in the project area and SHPD will be contacted.

## 3. Scenic and Open Space Resources

**Objective:**

*Protect, preserve and, where desirable, restore or improve the quality of coastal scenic and open space resources.*

**Policies:**

a. *Identify valued scenic resources in the coastal zone management area;*

b. *Ensure that new developments are compatible with their visual environment aby designing and locating such developments to minimize the alteration of natural landforms and existing public views to and along the shoreline;*

c. *Preserve, maintain, and where desirable, improve and restore shoreline open space and scenic resources; and*

d. *Encourage those developments that are not coastal dependent to locate in inland areas.*

**Response:** The proposed project involves the replacement of the existing chainlink fence and stacked rubble wall with a new CMU wall and swale, approximately four (4) feet high and installed within the west and north boundaries of the project site. The main segment of the wall will run in a mauka-makai direction. The smaller section facing Kamehameha V Highway will be installed in front of existing residential structures. As such, the project is not expected to result in any significant adverse impacts to the quality of coastal scenic and open space resources.

## 4. Coastal Ecosystems

**Objective:**

*Protect valuable coastal ecosystems, including reefs, from disruption and minimize adverse impacts on all coastal ecosystems.*

**Policies:**

a. *Exercise an overall conservation ethic, and practice stewardship in the protection, use, and development of marine and coastal resources;*

b. *Improve the technical basis for natural resource management;*

c. *Preserve valuable coastal ecosystems, including reefs, of significant biological or economic importance;*

d. *Minimize disruption or degradation of coastal water ecosystems by effective regulation of stream diversions, channelization, and similar land and water uses, recognizing competing water needs; and*

e. *Promote water quantity and quality planning and management practices that reflect the tolerance of fresh water and marine ecosystems and maintain and enhance water quality through the development and implementation of point and nonpoint source water pollution control measures.*

**Response:** Appropriate BMPs will be implemented to mitigate construction-related impacts. An Erosion Control Plan and BMPs are included in the project plans. Refer to **Appendix "B"**, Project Plans. As previously noted, the project incorporates the natural topography as well as the natural filtration of the adjacent wetland as a flood mitigation measure. The proposed project is intended to protect the subject DHHL Homestead lots from flooding during heavy rains and is not expected to result in significant adverse impacts to coastal ecosystems.

**5. Economic Uses**

**Objective:**

*Provide public or private facilities and improvements important to the State's economy in suitable locations.*

**Policies:**

a. *Concentrate coastal dependent development in appropriate areas;*

b. *Ensure that coastal dependent development such as harbors and ports, and coastal related development such as visitor industry facilities and energy generating facilities, are located, designed, and constructed to minimize adverse social, visual, and environmental impacts in the coastal zone management area; and*

c. *Direct the location and expansion of coastal dependent developments to areas presently designated and used for such developments and permit reasonable long-term growth at such areas, and permit coastal dependent development outside of presently designated areas when:*

   i. *Use of presently designated locations is not feasible;*

   ii. *Adverse environmental effects are minimized; and*

   iii. *The development is important to the State's economy.*

**Response:** The proposed project will have short-term positive economic impact with the generation of construction-related employment and services. There are no significant adverse economic impacts anticipated with the proposed project.

## 6. Coastal Hazards

**Objective:**

*Reduce hazard to life and property from tsunami, storm waves, stream flooding, erosion, subsidence, and pollution.*

**Policies:**

a. *Develop and communicate adequate information about storm wave, tsunami, flood, erosion, subsidence, and point and nonpoint source pollution hazards;*

b. *Control development in areas subject to storm wave, tsunami, flood, erosion, hurricane, wind, subsidence, and point and nonpoint source pollution hazards;*

c. *Ensure that developments comply with requirements of the Federal Flood Insurance Program; and*

d. *Prevent coastal flooding from inland projects.*

**Response:** According to the Flood Insurance Rate Maps (FIRMs) developed by the Federal Emergency Management Agency (FEMA), Parcel 25, (FIRM Panel Map 1500030193F) is located in Flood Zone AE. A small corner of Parcel 24 (FIRM Panel No. 1500030193F) is located in Zone VE with a majority of the parcel in Zone AE. Portion of Parcels 10 and 11, (FIRM Panel Map 1500030193F) are located in Zone AE and Zone VE. Parcel 9 (FIRM Panel Map 1500030189F) is located in Zone VE. Refer to **Figure 8**. Flood Zone AE (Shaded) in the portions of the project area represents a special flood hazard area that is subject to flooding by the 1-percent annual chance flood with a base flood elevation of 10 feet. Flood Zone VE represent coastal areas with a one (1) percent or greater chance of flooding with a base flood elevation of 12 feet and additional hazard associated with storm waves. A County of Maui Flood Development Permit will be obtained, as may be applicable to the project.

The parcels are identified on the tsunami evacuation maps developed by the State Civil Defense Agency.

The proposed improvements will mitigate home and property damages in the Hawaiian Homesteads area caused by flooding in the adjacent wetland during heavy rains. The project is limited to the demolition of previously constructed chainlink fence and stacked rubble wall, as well as the construction of a CMU wall and swale and does not involve the development of habitable structures or facilities within the area.

As previously noted, Parcel 9 is a shoreline fronting parcel, and based on certified Real Property tax records, was established on April 27, 1950, which is prior to the enactment of the Moloka'i Planning Commission Shoreline Setback Rules. Refer to **Appendix "D"**. As the project involves DHHL property, similar to the SMA rules, the Shoreline Setback Rules are not applicable to the project. The proposed CMU wall replacement and swale are approximately 60 feet away from the surveyed shoreline.

## 7. Managing Development

**Objective:**

*Improve the development review process, communication, and public participation in the management of coastal resources and hazards.*

**Policies:**

a. *Use, implement, and enforce existing law effectively to the maximum extent possible in managing present and future coastal zone development;*

b. *Facilitate timely processing of applications for development permits and resolve overlapping or conflicting permit requirements; and*

c. *Communicate the potential short and long-term impacts of proposed significant coastal developments early in their life cycle and in terms understandable to the public to facilitate public participation in the planning and review process.*

**Response:** The proposed project will undergo agency and public review during the Chapter 343, HRS Environmental Assessment (EA) review process. All aspects of the proposed project will follow accordingly to applicable Federal, State, and County standards. Early consultation with agencies and interested parties was conducted for the formulation of the Draft EA.

Copies of early consultation letters received and responses to those letters are provided in Chapter IX of this document.

## 8. Public Participation

**Objective:**

*Stimulate public awareness, education, and participation in coastal management.*

**Policies:**

*a. Promote public involvement in coastal zone management processes;*

*b. Disseminate information on coastal management issues by means of educational materials, published reports, staff contact, and public workshops for person and organizations concerned with coastal issues, developments, and government activities; and*

*c. Organize workshops, policy dialogues, and site-specific mediations to respond to coastal issues and conflicts.*

**Response:** As previously mentioned, this Draft EA will facilitate review for the public to be aware and participate in the review process for the proposed project. The proposed project is being processed accordingly with the objectives of public awareness, education, and participation. The Draft EA will also be reviewed at a Hawaiian Homes Commission meeting which is open to the public.

## 9. Beach Protection

**Objective:**

*Protect beaches for public use and recreation.*

**Policies:**

*a. Locate new structures inland from the shoreline setback to conserve open space, minimize interference with natural shoreline processes, and minimize loss of improvements due to erosion;*

*b. Prohibit construction of private erosion-protection structures seaward of the shoreline, except when they result in improved aesthetic and engineering solutions to erosion at the sites and do not interfere with existing recreational and waterline activities; and*

*c. Minimize the construction of public erosion-protection structures seaward of the shoreline.*

*d. Prohibit private owners from creating a public nuisance by inducing or cultivating the private property owner's vegetation in a beach transit corridor; and*

e. *Prohibit private property owners from creating a public nuisance by allowing the private property owner's unmaintained vegetation to interfere or encroach upon a beach transit corridor.*

**Response:** The proposed project will be located within the north and west boundaries of the previously developed DHHL Homestead lots approximately 60 feet from shore. As such, the project is not anticipated to result in significant adverse impacts to beaches for public use and recreation.

**10. Marine Resources**

**Objective:**

*Promote the protection, use, and development of marine and coastal resources to assure their sustainability.*

**Policies:**

a. *Ensure that the use and development of marine and coastal resources are ecologically and environmentally sound and economically beneficial;*

b. *Coordinate the management of marine and coastal resources and activities to improve effectiveness and efficiency;*

c. *Assert and articulate the interests of the State as a partner with federal agencies in the sound management of ocean resources within the United States exclusive economic zone;*

d. *Promote research, study, and understanding of ocean processes, marine life, and other ocean resources to acquire and inventory information necessary to understand how ocean development activities relate to and impact upon ocean and coastal resources; and*

e. *Encourage research and development of new, innovative technologies for exploring, using, or protecting marine and coastal resources.*

**Response:** The proposed project is confined to the north and west boundaries of the five (5) DHHL Homestead lots. As previously discussed, the project plan includes the implementation of an Erosion Control Plan and BMPs. Refer to **Appendix "A"**, Engineering Report, and **Appendix "B"**, Project Plans. As such, the proposed project is not expected to result in significant impacts to the protection, use and development of marine and coastal resources.

In addition to the foregoing objectives and policies, HRS Section 205A-30.5, Prohibitions, provides that:

*(a) No Special Management Area Use Permit or Special Management Area Minor Permit shall be granted for structures that allow artificial light from floodlights, uplights, or spotlights used for decorative or aesthetic purposes when the light:*

*(1) Directly illuminates the shoreline and ocean waters; or*

*(2) Is directed to travel across property boundaries toward the shoreline and ocean waters.*

*(b) Subsection (a) shall not apply to Special Management Area use permits for structures with:*

*(2) Artificial lighting provided by a government agency or its authorized users for government operations, security, public safety, or navigational needs; provided that a government agency or its authorized users shall make reasonable efforts to properly position or shield lights to minimize adverse impacts.*

**Response**: Construction activities are expected to be limited to daylight hours. However, should construction flood lights be required for night activities, these lights will be shielded and directed downward to minimize potential impacts to seabirds that may be confused by bright lights. Should large flood/work lights be used, they will be placed on poles high enough to allow the lights to be pointed directly downward at the ground. Once installed, the proposed improvements will not require any artificial lighting.

# IV. SUMMARY OF ADVERSE ENVIRONMENTAL EFFECTS WHICH CANNOT BE AVOIDED

# IV. SUMMARY OF ADVERSE ENVIRONMENTAL EFFECTS WHICH CANNOT BE AVOIDED

Project construction will result in a certain amount of unavoidable construction-related impacts. These include noise generated impacts and air quality impacts associated with the operation of construction equipment. Air quality will also be temporarily impacted by dust generated from site work. The construction-related impacts will be temporary and mitigated through implementation of appropriate Best Management Practices (BMPs).

During storm events the proposed project involves the installation of a new CMU wall and swale. This design will divert flow from Kamehameha V Highway to the existing wetland and will prevent water flow from the wetland to the subject parcels and avoid flooding of the homes on these parcels during heavy rainfall. Construction activities will include implementation of BMPs and erosion control measures, such as use of controlling fugitive dust and construction equipment washout from entering State waters, minimizing amount of land exposed, sodding slopes and exposed areas, use silt filter sock and silt fence, and protect the contractor's equipment storage areas with use of earth berms and/or absorption materials of silt fence and socks, to minimize water quality effects from sedimentation.

The proposed action will involve a commitment of fuel, labor, funding, and material resources. However, the commitment of resources necessary to implement the proposed project will be justified, given the eventual benefits to be realized through the completion of mitigation improvements that have a positive impact as the project is intended to protect the subject DHHL Homestead lots from flooding during rainfall events.

In the long term, construction of the proposed project is not anticipated to create any significant, adverse effects on the environment.

# V. ALTERNATIVES TO THE PROPOSED ACTION

# V. ALTERNATIVES TO THE PROPOSED ACTION

## A. PREFERRED ALTERNATIVE

The proposed project involves the removal of the existing chainlink fence and stacked rubble wall within the north and west edges of the five (5) Department of Hawaiian Home Lands (DHHL) Homestead lots and replacement with the construction of 700 linear feet of concrete masonary unit (CMU) wall, with swale along the property line. The CMU wall will divert the flow from Kamehameha V Highway to the north of the subject lots, to the existing wetland area located to the west of the lots. As previously discussed, the DHHL Homestead lots surface elevations are higher today than originally, as a result of fill work that was previously done to address flooding. This resulted in slopes downward into Kōheo wetlands. The proposed project is intended to eliminate the significant adverse impacts from flooding by removing the chainlink fence and stacked rubble wall, and replacing it with a solid concrete wall. The proposed CMU wall and swale will prevent water flow from the wetland onto the five (5) DHHL Homestead lots and divert runoff from the subject lots to the wetland area during wet weather events. The proposed CMU wall has a footprint of 0.17 acre within the boundary of each of the five (5) DHHL Homestead lots.

## B. DEFERRED OR NO ACTION ALTERNATIVE

The "deferred" or "no action" alternative would mean the replacement of the existing chainlink fence and stacked rubble wall with a new CMU wall and swale would not occur and the five (5) DHHL Homestead lots would continue to be subject to flooding during storm events. As such, the "deferred" or "no action" alternative was not considered.

# VI. IRREVERSIBLE AND IRRETRIEVABLE COMMITMENT OF RESOURCES

# VI. IRREVERSIBLE AND IRRETRIEVABLE COMMITMENT OF RESOURCES

The proposed action is anticipated to result in the irreversible and irretrievable commitment of certain natural and fiscal resources, including land, fuel, labor, funding, and material resources. Funding of the project is being provided from the State of Hawai'i, Department of Hawaiian Home Lands (DHHL) Capital Improvement Program.

The proposed project involves the removal and demolition of the existing chainlink fence and stacked rubble wall. A new approximately 4-foot high CMU fence wall with swale is proposed for installation around the boundary of five (5) DHHL Homestead lots identified as Parcel 9, Parcel 10, Parcel 11, Parcel 24, and Parcel 25. Refer to **Figure 2**. The proposed CMU wall has a footprint of 0.17 acre and will run along the west and north project site borders. The western segment of the CMU wall is estimated to traverse a length of 520 linear feet, terminating at a location approximately 60 feet mauka of the shoreline. The northern segment will run approximately 180 ft. facing Kamehameha V Highway. The total length of the wall is estimated to be 700 linear feet. The proposed project will divert the runoff from Kamehameha V Highway to the existing adjacent wetland to the west. The proposed wall will serve as a barrier to prevent stormwater flow from the wetland onto the subject lots during storm events. The proposed project is considered appropriate as it implements stormwater mitigation infrastructure to protect the five (5) DHHL Homestead lots which experience periodic flooding during rain events.

The proposed flood mitigation project is designed to comply with the latest County of Maui Rules for the Design of Storm Drainage Facilities in the County of Maui.

# VII. SIGNIFICANCE CRITERIA ASSESSMENT

# VII. SIGNIFICANCE CRITERIA ASSESSMENT

The "Significance Criteria", Section 12, of the Administrative Rules, Title 11, Chapter 200, "Environmental Impact Statement Rules", were reviewed and analyzed to determine whether the proposed project will have significant adverse impacts to the environment. The following analysis is provided:

1. **Involves an irrevocable commitment to loss or destruction of any natural or cultural resource**

   The Archaeological Assessment Report completed by Garcia and Associates in October 2015, concluded that the proposed project will result in "no historic properties" affected and no further archaeological work is recommended. This report was reviewed and accepted by State Historic Preservation Division (SHPD). Refer to **Appendix "F-1"**.

   In the event any human skeletal remains are found during ground altering activities, work will be stopped and the remains will be handled in consultation with SHPD.

   Garcia and Associates also carried out a Cultural Impact Assessment (CIA) for the proposed project in April 2016. Interviews with residents familiar with cultural history and practices were conducted. Based on the CIA, it is anticipated the proposed project will not adversely impact cultural resources or practices. Refer to **Appendix "G"**.

2. **Curtails the range of beneficial uses of the environment**

   The proposed project and the commitment of limited land resources are not anticipated to curtail the range of beneficial uses of the environment. The proposed flood mitigation improvements are designed to protect the five (5) Department of Hawaiian Home Lands (DHHL) Homestead lots from flooding during moderate to extreme rainfall events. With proposed mitigation measures, such as implementation of erosion control measures and Best Management Practices (BMPs) during construction, the proposed project is not expected to result in adverse effects on beneficial uses of the environment.

3. **Conflicts with the State's long-term environmental policies or goals and guidelines as expressed in Chapter 344, HRS, and any revisions thereof and amendments thereto, court decisions, or executive orders**

The State's Environmental Policy and Guidelines are set forth in Chapter 344, Hawai'i Revised Statutes (HRS). The proposed action does not contravene provisions of Chapter 344, HRS, court decisions, or executive orders.

4. **Substantially affects the economic welfare, social welfare, and cultural practices of the community or State**

The proposed action would provide a direct, short-term economic benefit to the community during the construction phase. The construction of the proposed flood mitigation infrastructure will serve and safeguard the subject DHHL Homestead lots by protecting these properties from flooding conditions during rainfall events.

As previously noted, based on the CIA, there are no anticipated adverse impacts to cultural resources or properties. Refer to **Appendix "G"**.

5. **Substantially affects public health**

No adverse impacts to public health are anticipated to result from the proposed action, which is a flood mitigation project.

6. **Involves substantial secondary impacts, such as population changes or effects on public facilities**

The project site is located within existing developed areas of Kapa'akea Makai Homestead properties and involves the replacement of the existing chainlink fence and stacked rubble wall with a new CMU wall and swale. Existing service limits will not be affected by project implementation. There are no anticipated adverse effects upon public services, such as police, fire, medical, educational, or waste collection services.

7. **Involves a substantial degradation of environmental quality**

During project implementation, appropriate measures, such as an Erosion Control Plan and BMP measures, will be implemented to mitigate potential short-term environmental impacts. Refer to **Appendix "B"**, Project Plans.

The proposed project is a BMP measure that is intended to avoid flooding of the subject DHHL Homestead Lots. To mitigate flooding of the lots, the proposed CMU wall and swale will divert the flow from Kamehameha V Highway to the

existing wetland and will prevent the water flow from the wetland to the project site.

8. **Is individually limited but cumulatively has considerable effect upon the environment or involves a commitment for larger actions**

The proposed action involves the replacement of an existing chainlink fence and stacked rubble wall with a new CMU wall and swale. As such, the project is not anticipated to result in significant adverse cumulative impacts and does not involve a commitment for larger actions. It is anticipated that implementation of the project would result in positive benefits to the beneficiaries of the five (5) DHHL Homestead lots by mitigating flooding conditions during heavy rainfall.

9. **Substantially affects rare, threatened or endangered species or its habitat**

There are no rare, threatened, or endangered species of fauna, flora, or their habitat on the project site, which is occupied by DHHL beneficiaries on previously developed lots. Refer to **Appendix "E"**, Flora and Fauna Survey. Therefore, significant adverse impacts to these environmental features are not anticipated from the project.

The adjacent Kōheo wetland known as a habitat for two (2) endangered waterbirds, the ae'o and 'alae ke'oke'o is under a cooperative agreement with a Moloka'i entity that is pursuing habitat enhancements and protective bird measures. Robert Hobdy's survey found the wetland has sufficient buffer that allows these birds to co-exist with surrounding human activities without significant adverse impact. Refer to **Appendix "E"**.

10. **Detrimentally affects air or water quality or ambient noise levels**

During the construction of the proposed improvements, there may be short-term impacts to air and noise quality. Appropriate BMPs will be implemented to minimize these short-term impacts which will not extend into the long term. As may apply, appropriate permits will be obtained such as a National Pollutant Discharge Elimination System (NPDES) Permit and Community Noise permit, to ensure appropriate mitigation measures are implemented during construction. Appropriate BMPs will be used during project construction to minimize short term impacts to water quality.

**11. Affects or is likely to suffer damage by being located in an environmentally sensitive area such as a floodplain, tsunami zone, beach, erosion prone area, geological hazardous land, estuary, fresh water or coastal waters**

The project area is an upland site and as per Robert Hobdy's survey report there are no aquatic resources that would characterize the area as a wetland. The wetland boundary line lies outside the project area to the west by distances ranging from 20 feet (below the highway) to 8 feet near the shoreline. Refer to **Exhibit "H"**, Wetland Study.

According to the Flood Insurance Rate Maps (FIRMs) developed by the Federal Emergency Management Agency (FEMA), Parcel 25, (FIRM Panel Map 1500030193F) is located in Flood Zone AE (base flood elevation of 10 feet). A small corner of Parcel 24 (FIRM Panel No. 1500030193F) is located in Zone VE (base flood elevation of 12 feet) with a majority of the parcel in Zone AE. Portion of Parcels 10 and 11, (FIRM Panel Map 1500030193F) are located in Zone AE and Zone VE. Parcel 9 (FIRM Panel Map 1500030189F) is located in Zone VE. Refer to **Figure 8**. Flood Zone AE (Shaded) in the portions of the project area represents a special flood hazard area that is subject to flooding by the 1-percent annual chance flood. Flood Zone VE represent coastal areas with a one (1) percent or greater chance of flooding and additional hazard associated with storm waves. A County of Maui Flood Development Permit will be obtained, as may be applicable to the project.

The parcels are identified on the tsunami evacuation maps developed by the State Civil Defense Agency. Refer to **Figure 9**. It is noted that the proposed project involves the removal of an existing chainlink fence and stacked rubble wall, and installation of a new CMU wall and swale, non-habitable element on the parcels.

As previously noted, Parcel 9 is a shoreline fronting parcel, and based on certified Real Property tax records, was established on April 27, 1950, which is prior to the enactment of the Moloka'i Planning Commission Shoreline Setback Rules. As previously noted, the proposed project involves DHHL property and similar to the SMA rules, the Shoreline Setback Rules are not applicable to the project due to jurisdiction. The proposed CMU wall and swale will be approximately 60 feet away from the surveyed shoreline.

As such, this project is not anticipated to result in an adverse effect on environmentally sensitive areas.

12. **Substantially affects scenic vistas and viewplanes identified in County or State plans or studies**

The proposed action is limited to replacement of a chainlink fence and stacked rubble wall with a CMU wall and swale, which are low in profile (approximately four (4) feet in height). The CMU wall will be built around existing residential structures and will run primarily in a mauka-makai direction along the subject DHHL Homestead lots. As such, the proposed project is not anticipated to result in substantive, adverse impacts to identified scenic vistas or viewplanes.

13. **Requires substantial energy consumption**

The proposed action will involve the short-term commitment of fuel for equipment, vehicles, and machinery during construction activities. Upon completion of construction, the project will not involve energy consumption.

In summary, the proposed project is intended to protect the five (5) DHHL Homestead lots from flooding during rainfall events. The improvements are limited to the existing subject lots and are not anticipated to have a significant adverse impact on the environment.

Based on the foregoing findings, the proposed action is anticipated to result in a Finding of No Significant Impact (FONSI) determination by the DHHL.

# VIII. LIST OF PERMITS AND APPROVALS

# VIII. LIST OF PERMITS AND APPROVALS

The following permits and approvals will be required prior to the implementation of the project.

**State of Hawai'i**

1. National Pollutant Discharge Elimination System (NPDES) Permit (construction, as applicable)
2. Community Noise Permit, as applicable

**County of Maui**

1. Construction Permits (i.e. Grubbing/Grading, and Building Permits, as applicable)
2. Special Flood Hazard and Development Permit, as applicable

# IX. PARTIES CONSULTED DURING THE PREPARATION OF THE DRAFT ENVIRONMENTAL ASSESSMENT; LETTERS RECEIVED AND RESPONSES TO SUBSTANTIVE COMMENTS

# IX. PARTIES CONSULTED DURING THE PREPARATION OF THE DRAFT ENVIRONMENTAL ASSESSMENT; LETTERS RECEIVED AND RESPONSES TO SUBSTANTIVE COMMENTS

The following agencies were consulted during preparation of the Draft Environmental Assessment (EA). Agency comments and responses to substantive comments are included herein.

**FEDERAL AGENCIES**

1. Lt. Furyisa Miller
   **U.S. Coast Guard**
   Fourteenth Coast Guard District
   300 Ala Moana Boulevard,
   Room 9-204
   Honolulu, Hawai'i 96850-4982

2. Larry Yamamoto, State Conservationist
   Natural Resources Conservation Service
   **U.S. Department of Agriculture**
   P.O. Box 50004
   Honolulu, Hawai'i 96850-0001

3. Ranae Ganske-Cerizo, Soil Conservationist
   Natural Resources Conservation Service
   **U.S. Department of Agriculture**
   77 Hookele Street, Suite 202
   Kahului, Hawai'i 96732

4. Wally Jennings
   Natural Resources Conservation Service
   **U.S. Department of Agriculture**
   P. O. Box 396
   Hoolehua, Hawai'i 96729

5. Shelly Lynch, Chief, Regulatory Branch
   **U.S. Department of the Army**
   U.S. Army Engineer District, Honolulu
   Regulatory Branch, Building 230
   Fort Shafter, Hawai'i 96858-5440

6. Kristi Young, Acting Field Supervisor
   **U. S. Fish and Wildlife Service**
   300 Ala Moana Blvd., Rm. 3-122
   Box 50088
   Honolulu, Hawai'i 96850

7. Kay Zukeran
   **NOAA Inouye Regional Center**
   **NMFS/PIRO**
   1845 Wasp Boulevard, Building 176
   Honolulu, Hawai'i 96818

**STATE AGENCIES**

8. Douglas G. Murdock, Comptroller
   **Department of Accounting and General Services**
   1151 Punchbowl Street, #426
   Honolulu, Hawai'i 96813

9. Scott Enright, Chair
   **Department of Agriculture**
   1428 South King Street
   Honolulu, Hawai'i 96814-2512

10. Wesley Machida, Director
    **Department of Budget and Finance**
    P.O. Box 150
    Honolulu, Hawai'i 96810

11. Kathryn Matayoshi, Superintendent
    State of Hawai'i
    **Department of Education**
    P.O. Box 2360
    Honolulu, Hawai'i 96804

12. Heidi Meeker
Office of Business Services
**Department of Education**
c/o Kalani High School
4680 Kalanianaole Highway, #T-B1A
Honolulu, Hawai'i 96821

13. Virginia "Ginny" Pressler, MD, MBA, FACS, Director
State of Hawai'i
**Department of Health**
919 Ala Moana Blvd., Room 300
Honolulu, Hawai'i 96814

14. Alec Wong, P.E., Chief
Clean Water Branch
State of Hawai'i
**Department of Health**
919 Ala Moana Blvd., Room 300
Honolulu, Hawai'i 96814

15. Patti Kitkowski
State of Hawai'i
**Department of Health**
Maui Sanitation Branch
54 South High Street, Room 300
Wailuku, Hawai'i 96793

16. Laura McIntyre, AICP
Environmental Planning Office
**Department of Health**
919 Ala Moana Blvd., Suite 312
Honolulu, Hawai'i 96814

17. Lene Ichinotsubo
State of Hawai'i
**Department of Health**
919 Ala Moana Blvd., Room 212
Honolulu, Hawai'i 96814

18. Suzanne Case, Chairperson
State of Hawai'i
**Department of Land and Natural Resources**
P. O. Box 621
Honolulu, Hawai'i 96809

19. Alan Downer, Administrator
State of Hawai'i
Department of Land and Natural Resources
**State Historic Preservation Division**
601 Kamokila Blvd., Room 555
Kapolei, Hawai'i 96707

20. Morgan Davis
State of Hawai'i
Department of Land and Natural Resources
**State Historic Preservation Division**
130 Mahalani Street
Wailuku, Hawai'i 96793

21. Ford Fuchigami, Director
State of Hawai'i
**Department of Transportation**
869 Punchbowl Street
Honolulu, Hawai'i 96813

22. Brigadier General Arthur "Joe" Logan, Adjutant General
**Hawai'i State Civil Defense**
3949 Diamond Head Road
Honolulu, Hawai'i 96813-4495

23. Scott Glenn, Director
**Office of Environmental Quality Control**
235 S. Beretania Street, Suite 702
Honolulu, Hawai'i 96813

24. Dr. Kamana`opono Crabbe, Chief Executive Officer
**Office of Hawaiian Affairs**
560 N. Nimitz Highway, Suite 200
Honolulu, Hawai'i 96817

25. Leo R. Asuncion, Jr., AICP, Acting Director
State of Hawai'i
**Office of Planning**
P. O. Box 2359
Honolulu, Hawai'i 96804

**COUNTY AGENCIES**

26. Anna Foust
**Maui Civil Defense Agency**
200 South High Street
Wailuku, Hawai'i 96793

27. Stewart Stant, Director
County of Maui
**Department of Environmental Management**
2050 Main Street, Suite 2B
Wailuku, Hawai'i 96793

28. Jeffrey A. Murray, Chief
County of Maui
**Department of Fire and Public Safety**
200 Dairy Road
Kahului, Hawai'i 96732

29. Carol Reimann, Director
County of Maui
**Department of Housing and Human Concerns**
One Main Plaza
2200 Main Street, Suite 546
Wailuku, Hawai'i 96793

30. Ka'ala Buenconsejo, Director
County of Maui
**Department of Parks and Recreation**
700 Halia Nakoa Street, Unit 2F
Wailuku, Hawai'i 96793

31. William Spence, Director
County of Maui
**Department of Planning**
2200 Main Street, Suite 315
Wailuku, Hawai'i 96793

32. Tivoli Faaumu, Chief
County of Maui
**Police Department**
55 Mahalani Street
Wailuku, Hawai'i 96793

33. David Goode, Director
County of Maui
**Department of Public Works**
200 South High Street
Wailuku, Hawai'i 96793

34. Don Medeiros, Director
County of Maui
**Department of Transportation**
200 South High Street
Wailuku, Hawai'i 96793

35. David Taylor, Director
County of Maui
**Department of Water Supply**
200 South High Street
Wailuku, Hawai'i 96793

36. Honorable Stacy Crivello
**Maui County Council**
200 South High Street
Wailuku, Hawai'i 96793

**UTILITIES**

37. Michael Grider, Interim Manager, Engineering
**Maui Electric Company, Ltd.**
P.O. Box 398
Kahului, Hawai'i 96733

38. **Hawaiian Telcom**
60 South Church Street
Wailuku, Hawai'i 96793

**COMMUNITY ORGANIZATIONS**

39. Ekolu Lindsey
**Maui Cultural Lands, Inc.**
P. O. Box #122
Lahaina, Hawai'i 96767

MAY 18 2016

**Subject:** FW: Kapa'akea Flood Mitigation Project - Corps Comments
**Attachments:** POH-2016-00112_EA_Consultation_Request_06MAY2016.pdf

-----Original Message-----
From: Damico, Katy R POH [mailto:Katy.R.Damico@usace.army.mil]
Sent: Monday, May 16, 2016 1:48 PM
To: Gwendolyn Rivera
Cc: Chen, Edward; John Nakagawa
Subject: FW: Kapa'akea Flood Mitigation Project - Corps Comments

My apologies, I had a typo in your email address.

-----Original Message-----
From: Damico, Katy R POH
Sent: Tuesday, May 17, 2016 9:43 AM
To: 'Gwendolyn@munekiyohirage.com' <Gwendolyn@munekiyohirage.com>
Cc: 'Chen, Edward' <edward.chen@doh.hawaii.gov>; John Nakagawa <JNakagaw@dbedt.hawaii.gov>
Subject: Kapa'akea Flood Mitigation Project - Corps Comments

Ms. Rivera,

I have reviewed the attached letter requesting early consultation on the proposed Kapa'akea Flood Mitigation Project.

This letter did not provide the level of information I would need to make a permit decision. However, based upon the information provided, this project is located immediately adjacent to a jurisdictional wetland (Koheo Wetland and Ka Lai o Ke Kioea Bird Sanctuary located at TMK (2) 5-3-007:039, Kaunakakai, Island of Molokai, Hawaii) and a Department of the Army (DA) permit may be required for the construction of the proposed wall, depending upon the exact location of the wall construction and staging areas, and temporary and permanent impacts.

The Corps operates under the following authorities: Section 404 of the Clean Water Act (Section 404) and Section 10 of the Rivers and Harbors Act of 1899 (Section 10). Section 404 requires authorization prior to the discharge and/or placement of dredged or fill material into waters of the U.S., including adjacent wetlands. Section 10 requires authorization prior to conducting work in, over, under, and affecting navigable waters.

Based on your submittal, the proposed project may require placing a structure and/or fill within the Kohoe Wetland area. Therefore, in accordance with Section 10 and/or Section 404 you must obtain a DA permit from this office prior to commencing your proposed work.

The proposed work may qualify for authorization under a Nationwide Permit. Please fill out the DA permit application at http://www.poh.usace.army.mil/Missions/Regulatory.aspx (Click large Red button in upper left corner "Click to fill out a Corps Permit") and submit to this office via email at: CEPOH-RO@usace.army.mil .

Section 401(a)(1) of the Clean Water Act requires that you obtain a Water Quality Certification or waiver from the State of Hawaii, Department of Health, Clean Water Branch. For additional information, please contact the Clean Water Branch at (808) 586-4309 or cleanwaterbranch@doh.hawaii.gov. A final DA permit will not be issued until this office has received a copy of the approved 401 WQC or waiver.

Before authorizing work under our statutory authorities, the Corps must ensure a project complies with applicable Federal laws and regulations, such as the Endangered Species Act (ESA), Magnuson-Stevens Fishery Conservation and Management Act, Section 401 of the Clean Water Act, Coastal Zone Management Act, and the National Historic Preservation Act. In most instances, the Corps will coordinate directly with the appropriate agencies, but we may require additional information from you to complete the coordination and consultation. However, if you have already started or completed any coordinations with under these applicable laws and regulations, please include that information in your permit application.

I am currently located in the Honolulu District Guam Regulatory Field Office, so if you would like to have a Corps project manager meet you on-site or have a face-to-face meeting to discuss this project in more detail, please contact the main Honolulu District Office at 808-835-4303 or via email at CEPOH-RO@usace.army.mil .

Please contact me if you have any questions.

Respectfully,
Katy

Katy R. Damico
US Army Corps of Engineers
Honolulu District, Regulatory Office
Guam Field Office
Apra Harbor Naval Complex
PSC 455 Box 188
FPO, AP 96540-1088 Guam

Office: (671) 339-2108
IP Phone: (808) 835-4160
Cell: (808) 283-0549
Email: katy.r.damico@usace.army.mil
District Email: CEPOH-RO@usace.army.mil

For more information regarding the Regulatory Program at the Honolulu District, please visit our website at http://www.poh.usace.army.mil/Missions/Regulatory.aspx.

For general inquiries, please contact the Honolulu District Regulatory Office at 808-835-4303 or via email at CEPOH-RO@usace.army.mil

You are encouraged to provide comments on your experience with the Honolulu District Regulatory Office by accessing our web-based customer survey form at http://corpsmapu.usace.army.mil/cm_apex/f?p=136:4:0.

MUNEKIYO HIRAGA
Planning. Project Management. Sustainable Solutions.

Michael T. Munekiyo
PRESIDENT
Karlynn K. Fukuda
EXECUTIVE VICE PRESIDENT
Mark Alexander Roy
VICE PRESIDENT
Tessa Munekiyo Ng
VICE PRESIDENT

July 22, 2016

*Email: katy.r.damico@usace.army.mil*

Katy Damico
Department of the Army
Honolulu District, Army Corps of Engineers
Guam Field Office
Apra Harbor Naval Complex
PSC 455 Box 188
FPO, AP 96540-1088 Guam

SUBJECT: Early Consultation Letter Request for the Department of Hawaiian Home Lands Kapa'akea Flood Mitigation Project, Kaunakakai, Moloka'i (Reference: POH-2016-00112)

Dear Ms. Damico:

Thank you for your emailed comments dated May 16, 2016, responding to our request for early consultation in preparation of a Draft Environmental Assessment (EA) for the proposed Kapa'akea Flood Mitigation Project. On behalf of the State of Hawai'i, Department of Hawaiian Home Lands (DHHL) we offer the following responses in the order of the comments in your email.

***Comment No.1***

*This letter did not provide the level of information I would need to make a permit decision. However, based upon the information provided, this project is located immediately adjacent to a jurisdictional wetland (Koheo Wetland and Ka Lai o Ke Kioea Bird Sanctuary located at TMK (2) 5-3-007:039, Kaunakakai, Island of Molokai, Hawaii) and a Department of the Army (DA) permit may be required for the construction of the proposed wall, depending upon the exact location of the wall construction and staging areas, and temporary and permanent impacts.*

*The Corps operates under the following authorities: Section 404 of the Clean Water Act (Section 404) and Section 10 of the Rivers and Harbors Act of 1899 (Section 10). Section 404 requires authorization prior to the discharge and/or placement of dredged or fill material into waters of the U.S., including adjacent wetlands. Section*

*10 requires authorization prior to conducting work in, over, under, and affecting navigable waters.*

***Response:*** Kōheo Wetland is adjacent to the five (5) DHHL Homestead lots (Tax Map Key's (2)5-4-007:009, 010, 011, 024, and 025), which the proposed project is intended to protect from flooding during storm events. According to a Wetland Study that was prepared for the subject project, the neighboring wetland area is in a low spot on the coastal plain at the boundary between Kaunakakai and Kapa'akea. It is fed by ground water, local rainfall and receives runoff from a small ephemeral unnamed gully above the highway. It only flows during heavy rain events. When the gully reaches the coastal plain it disappears and any runoff spreads out as a sheet flow. At the Kamehameha V Highway, the water accumulates as temporary ponding due to inadequate drainage features until it overflows down slope into the wetland.

The Wetland Study further noted that the Kapa'akea Homesteads were established along the coastal plain with the first lots being awarded to DHHL beneficiaries in 1950. The lots adjacent to the wetland are lower in elevation and were prone to temporary flooding during high rainfall events. Fill material was brought in and spread on these lots to build up the surface elevations one (1) to two (2) feet to minimize impacts to the property from flooding. This resulted in a clear, fairly straight boundary line that slopes down in the wetland from the DHHL lots. The proposed project is intended to mitigate this threat from flooding.

The entire Kōheo Wetland was delineated in a 2005 study that was submitted to the U.S. Army Corps of Engineers. The 2005 study found the eastern boundary of the wetland to roughly approximate the lower toe of the slope below the DHHL boundary. This study had a 5-year sunset date, and that date has passed. As such for this project, a portion of the eastern boundary was reassessed for any potential recent changes regarding the project boundary. Robert Hobdy prepared a report summarizing the findings of a wetland determination process in accordance with the Corps of Engineers Wetlands Delineation Manual (1987) and the Regional Supplement to the Corps of Engineers Wetland Delineation Manual; Hawaii and Pacific Island Regional (2012). See **Attachment "1"** (Wetland Study).

Based on samplings as explained in the study, Mr. Hobdy's determined that the wetland boundary line lies entirely outside of the DHHL Kapa'akea Flood Mitigation Project boundary by distances ranging from 20 feet at the

top (north end) to 8 feet near the shoreline (south end). Mr. Hobdy's report also found that the entire 2.5-acre project area is an upland site with no aquatic resources that would qualify it as a Waters of the U.S. Refer to **Attachment "1"** and see **Attachment "2"** (Project Boundary and Wetland Boundary Map).

Based on the Wetland Study for the project, it is respectfully requested that your office confirm requirements for a Department of Army Permit as the project site and related activities will be outside the wetland area. There will be no construction staging or activities associated with the project in the Kōheo wetland. Additionally, the project includes water pollution prevention measures, temporary and permanent erosion control measures, and Best Management Practices (BMPs), such as installing silt fencing, berms, sandbags and catchments; watering of exposed areas, and installation of absorption materials areas for construction vehicles to prevent pollutants from discharging into State waters, to mitigate potential adverse impacts to downstream and nearby properties. See **Attachment "3"** (Project Plans).

***Comment No. 2***

*Based on your submittal, the proposed project may require placing a structure and/or fill within the Kohoe Wetland area. Therefore, in accordance with Section 10 and/or Section 404 you must obtain a DA permit from this office prior to commencing your proposed work.*

*The proposed work may qualify for authorization under a Nationwide Permit. Please fill out the DA permit application at* http://www.poh.usace.army.mil/Missions/Regulatory.aspx *(Click large Red button in upper left corner "Click to fill out a Corps Permit") and submit to this office via email at:* CEPOH-RO@usace.army.mil .

***Response:*** As discussed in our comment above, it is respectfully requested that your office determine whether there are requirements for a Department of Army Permit based on the Wetland Study conducted by Mr. Hobdy. The project and related construction activities will occur outside the wetland area.

***Comment No. 3***

*Section 401(a)(1) of the Clean Water Act requires that you obtain a Water Quality Certification or waiver from the State of Hawaii, Department of Health, Clean Water Branch. For additional information, please contact the Clean Water Branch at (808) 586-4309 or* cleanwaterbranch@doh.hawaii.gov. *A final DA permit will not be issued*

*until this office has received a copy of the approved 401 WQC or waiver.*

***Response:*** Should a Department of Army Permit be required by your office for this project, the project will comply with Section 401(a)(1) of the Clean Water Act and the State of Hawai'i, Department of Health, Clean Water Branch will be contacted for information.

***Comment No. 4***

*Before authorizing work under our statutory authorities, the Corps must ensure a project complies with applicable Federal laws and regulations, such as the Endangered Species Act (ESA), Magnuson-Stevens Fishery Conservation and Management Act, Section 401 of the Clean Water Act, Coastal Zone Management Act, and the National Historic Preservation Act. In most instances, the Corps will coordinate directly with the appropriate agencies, but we may require additional information from you to complete the coordination and consultation. However, if you have already started or completed any coordinations with under these applicable laws and regulations, please include that information in your permit application.*

***Response:*** It is acknowledged that projects under the jurisdiction of the U.S. Army Corps of Engineer must comply with applicable federal laws and regulations noted in your email, and the project design team will coordinate and consult with appropriate agencies as requested by your office. Any coordination effort will be included in the Department of Army Permit application, as may be required.

Again, thank you for your participation in the Chapter 343, Hawai'i Revised Statutes review process. A copy of your emailed comments and our response will be included in the Draft EA. A copy of the Draft EA will be sent to the Army Corps office for review and comment. Should you have any questions or require further information regarding the proposed action, please contact me at (808)244-2015.

Very truly yours,

Gwendolyn Rivera

Gwendolyn Leialoha Cheney Rivera
Senior Associate

GLCR:yp
Attachments
cc: James Richardson, State of Hawai'i, Department of Hawaiian Home Lands (w/attachments)
Nancy McPherson, State of Hawai'i, Department of Hawaiian Home Lands (w/attachments)
Chad McDonald, Mitsunaga and Associates, Inc. (w/attachments)
Chris Ball, Mitsunaga and Associates, Inc. (w/attachments)
K:\DATA\MA\DHHL Kapaakea EA 1900\Applications\EC\EC Response Letters\Army.res.doc

# ATTACHMENT 1.

# Wetland Study

# Wetland Study

# Department of Hawaiian Home Lands

# Kapa'akea Flood Mitigation Project

# Kapa'akea, Moloka'i

by

Robert W. Hobdy
Environmental Consultant
Koakomo, Maui
January 2016

Prepared for:
State of Hawaii
Department of Hawaiian Home Lands

## INTRODUCTION

The Department of Hawaiian Home Lands (DHHL) Kapa'akea Flood Mitigation Project is located 0.75 miles to the east of Kaunakakai Town below Kamehameha V Highway. The project area includes five DHHL lots (TMK's (2) 5-4-07:9, 10, 11, 24, 25) that total approximately 2.5 acres and stretch from the Highway down to the shoreline (see Figures 1 and 2). Bordering the project area to the west is the Kōheo Wetland. This flood mitigation project calls for the construction of a concrete retaining wall between the DHHL lots and the Kōheo Wetland to protect the lots from potential flooding. This wetland study was initiated to determine and delineate the wetland boundary relative to the western edge of the DHHL lots.

## BACKGROUND HISTORY

Kōheo Wetland is located in a low spot on the coastal plain at the boundary between Kaunakakai and Kapa'akea. It is fed by ground water, local rainfall and receives runoff from a small ephemeral unnamed gully above the highway. It only flows during heavy rainfall events. When this gully reaches the coastal plain it disappears and any runoff spreads out as sheet flow. At the highway the water accumulates as temporary ponding due to inadequate drainage features until it over flows down slope into the wetland.

The Kapa'akea Homesteads were established along the coastal plain, with the first lots being awarded in 1950. The lots adjacent to the wetland were lower in elevation and were prone to periodic temporary flooding during high rainfall events. Fill material was brought in and spread on these lots to build up the surface elevations one to two feet to minimize flood damages. This resulted in a clear, rather straight boundary line that slopes down into the wetland from the DHHL lots (Figures 4 & 5). The proposed construction of a concrete wall is intended to eliminate this threat.

The entire Kōheo Wetland was delineated in a 2005 study that was submitted to the U.S. Army Corps of Engineers. The 2005 study found the eastern boundary of the wetland to roughly approximate the lower toe of the slope below the DHHL boundary. This study, however, has exceeded its 5-year sunset date and a portion of the eastern boundary is here reassessed to accommodate any potential recent changes relative to the project boundary.

## SURVEY OBJECTIVES

This report summarizes the findings of a wetland determination process in accordance with the Corps of Engineers Wetlands Delineation Manual (1987) and the Regional Supplement to the Corps of Engineers Wetland Delineation Manual: Hawaii and Pacific Islands Regional (2012). Work consisted of following set procedures, conducting tests and making observations in order to determine the presence or absence of indicators of hydrophytic vegetation, hydric soils and wetland hydrology with the goal of making a definitive determination as to whether a wetland exists on the property and to delineate the boundaries of any such wetland. This wetland boundary will then be shown relative to the DHHL Homestead boundary and the proposed alignment of the concrete flood mitigation wall.

## SURVEY METHODS

Procedures required the assessment and characterization of vegetation, the excavation of soil pits for the analysis of soil types, and the documentation of indicators of wetland hydrology following U.S. Corps of Engineers Guidelines.

Equipment and tools used included:

- 3 inch diameter hand auger
- Sharpshooter shovel
- Wooden stakes
- Hammer
- Hand Level
- Tape measure
- Camera
- Munsell soil color charts
- Machete
- Corps of Engineers Wetlands Delineation Manual (U.S.A.C.E. 1987) and the Regional Supplement to the Corps of Engineers Wetland Delineation Manual: Hawaii and Pacific Islands Region (2012).
- National List of Plants that Occur in Wetlands: Hawaii (Region H) 2004
- Plastic flagging
- Spray marking paint

### Preliminary Data Gathering and Synthesis

The following sources of information were utilized in the preparation of this report:

- USGS topographic maps and other maps: 1900, 1924, 1952, 1983
- High elevation aerial photography: 1975, 2012
- SCS (NRCS) Soil Survey, 1972.
- Local individuals and experts with special knowledge of the history, conditions and environmental functioning of the subject area and surroundings.

These sources are referenced in this report or included in the appendix as appropriate. Six sampling points were selected outside the project area along the lower slope below the western boundary of the DHHL lots where it appeared to be close to being a wetland. At each site a soil pit was dug and wetland analysis performed. This study just addresses the eastern edge of the Kōheo Wetland where it is close to the project area.

## RESULTS

Six sampling points were established a little outside the west boundary of the project area in a line running from below the highway down toward the shoreline (see Figure 2). Each of these were analyzed for wetland characteristics as described above. Sampling points 1 through 5 were found to lie just outside the margin of the wetland, while sampling point 6 was just within the margin of the wetland. From this information a proposed wetland boundary was determined and is delineated as shown in Figure 2. This wetland boundary line lies entirely outside of the DHHL Kapa'akea Flood Mitigation Project boundary by distances ranging from 20 feet at the top to 8 feet near the shoreline. The Wetland Determination Data Forms and analyses are presented below.

## WATERS OF THE U.S. ANALYSIS

The DHHL Kapa'akea Flood Mitigation Project lies on approximately 2.5 acres of coastal plain between two gullies that drain into the Pacific Ocean (see Figure 3). To the west is a small unnamed ephemeral gully that drains about 50 acres of land on the slopes of Pu'u Maninikolo and terminates at the Kōheo Wetland adjacent to the shoreline. To the east is a larger unnamed ephemeral gulch that drains about 250 acres above the Kapa'akea Cemetery and runs through the DHHL Kapa'akea Homesteads to the ocean.

An eleven acre area between the two adjacent drainages lies on nearly level land on the coastal plain and includes five acres of undeveloped grass land and kiawe (*Prosopis pallida*) forest above Kamehameha V Highway and six acres of the residential Kapa'akea Homesteads community below the highway to the shoreline. This eleven acre area has no drainage channels and no wetlands. The 2.5 acre project area lies wholly within this eleven acre area. The companion wetland study found the boundary of Kōheo Wetland to lie entirely outside the western side of the project area as is the drainage that feeds it. The unnamed drainage to the east has no wetlands associated with it. Because this project area clearly has no aquatic resources within it or directly abutting its boundary, there is nothing to assess and the use of an Approved Jurisdictional Determination Form is deemed to be unnecessary.

The entire 2.5 acre DHHL Kapa'akea Flood Mitigation project is determined to be an upland site with no aquatic resources that would qualify it as a Waters of the U.S.

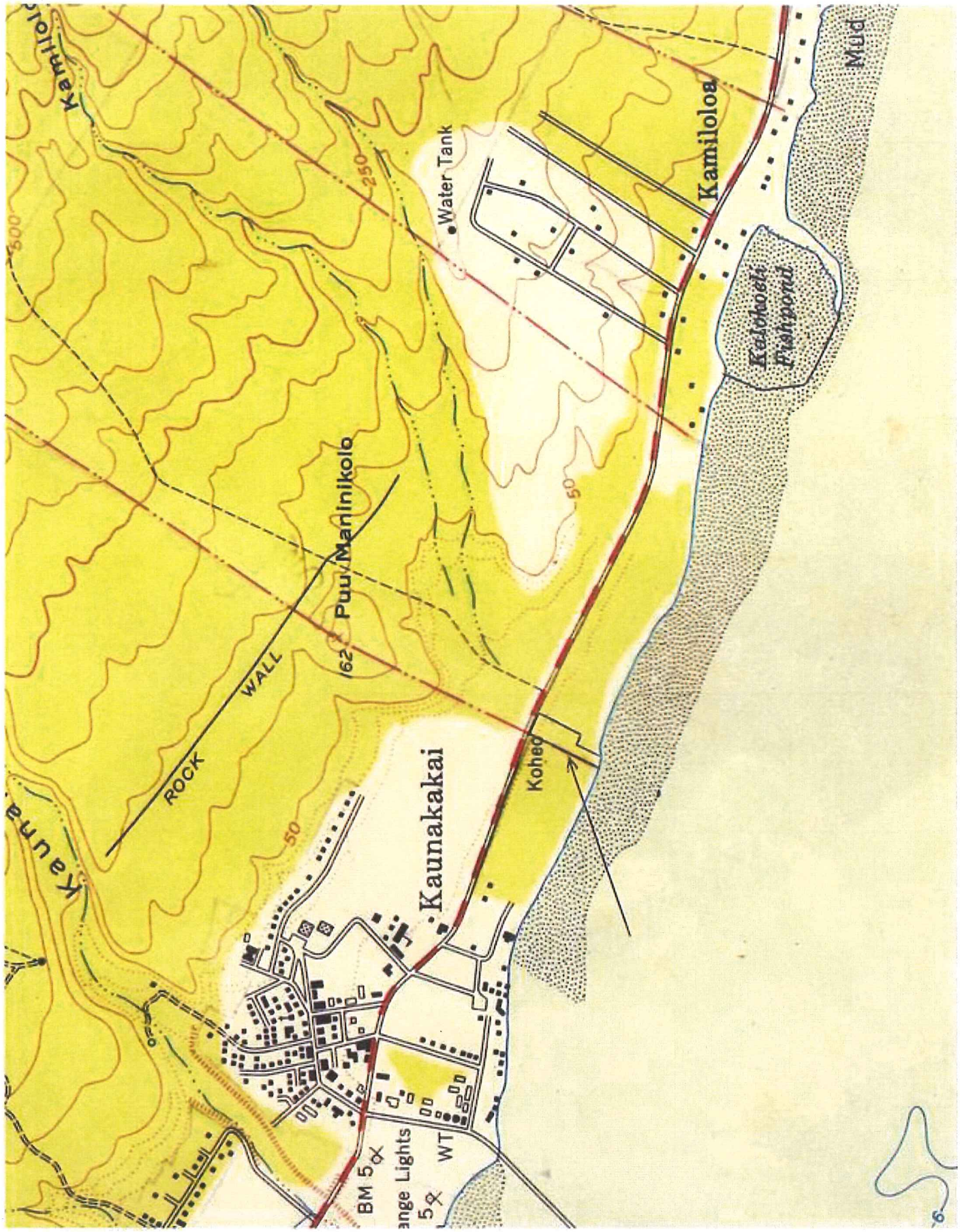


Figure 1. DHHL Kapa'akea Flood Mitigation Project (1952 USGS Kaunakakai Quadrant Map)




Figure 2.

---------- DHHL Kapa'akea Flood Mitigation Project boundary

---------- Proposed concrete wall along west and north boundaries of project area.

- - - - - - - - - - > Runoff flow pattern of unnamed drainage along west boundary of project area.

③——④——⑤ Numbered sampling points and proposed wetland boundary




Figure 3

---------- DHHL Kapa'akea Flood Mitigation Project Area

- - - - - - - - - - Ephemeral stream storm water flow from adjacent unnamed gullies

---------- Watershed boundaries of adjacent unnamed gullies



Figure 4. View northeast across the project boundary into the DHHL Lots, showing their developed residential character.



Figure 5. View north along project boundary. The proposed wetland boundary is indicated by red stakes which are located near the toe of the slope below the elevated DHHL lots.

## WETLAND DETERMINATION DATA FORM – Hawai'i and Pacific Islands Region

Project/Site: DHHL Kapaakea Flood Mitigation Project City: Kapaakea Sampling Date: 1-08-16 Time: 0800

Applicant/Owner: Department of Hawaiian Home Land State/Terr/Comlth.: Hawaii Island: Molokai Sampling Point: 1

Investigator(s): Robert Hobdy TMK/Parcel: (2)5-4-07: 9, 10, 11, 24, 25

Landform (hillslope, coastal plain, etc.): Coastal Plain Local relief (concave, convex, none): Concave

Lat: 21° 05' 05.69" N Long: 157° 00' 45.00" W Datum: 3 ft. Slope (%): 0-1%

Soil Map Unit Name: Kealia Silt Loam NWI classification: PEM1R

Are climatic / hydrologic conditions on the site typical for this time of year? Yes X No ____ (If no, explain in Remarks.)

Are Vegetation No Soil No, or Hydrology No significantly disturbed? Are "Normal Circumstances" present? Yes X No ____

Are Vegetation No Soil No, or Hydrology No naturally problematic? (If needed, explain any answers in Remarks.)

### SUMMARY OF FINDINGS – Attach site map showing sampling point locations, transects, important features, etc.

| | | | |
|---|---|---|---|
| Hydrophytic Vegetation Present? | Yes ____ | No X | Is the Sampled Area within a Wetland? Yes ____ No X |
| Hydric Soil Present? | Yes ____ | No X | |
| Wetland Hydrology Present? | Yes ____ | No X | |

Remarks: This sampling point experiences short-term overflow runoff from Kamehameha V Highway following heavy rainfall events which continues laterally down into Kokeo wetland- while not a wetland, it lies close to the wetland boundary.

### VEGETATION – Use scientific names of plants.

| Tree Stratum (Plot size: 30 ft. radius) | Absolute % Cover | Dominant Species? | Indicator Status |
|---|---|---|---|
| 1. Prosopis pallida | 60 | Yes | FACU |
| 2. | | | |
| 3. | | | |
| 4. | | | |
| 5. | | | |
| | 60 = Total Cover | | |
| **Sapling/Shrub Stratum (Plot size: 30 ft. radius)** | | | |
| 1. Pluchea indica | 4 | Yes | FAC |
| 2. | | | |
| 3. | | | |
| 4. | | | |
| 5. | | | |
| | 4 = Total Cover | | |
| **Herb Stratum (Plot size: 30 ft. radius)** | | | |
| 1. Cynodon dactylon | 5 | Yes | FACU |
| 2. Chenopodium murale | 1 | Yes | FACU |
| 3. | | | |
| 4. | | | |
| 5. | | | |
| 6. | | | |
| 7. | | | |
| 8. | | | |
| | 6 = Total Cover | | |
| **Woody Vine Stratum (Plot size: ____)** | | | |
| 1. | | | |
| 2. | | | |
| | 0 = Total Cover | | |

**Dominance Test worksheet:**

Number of Dominant Species That Are OBL, FACW, or FAC: 1 (A)

Total Number of Dominant Species Across All Strata: 4 (B)

Percent of Dominant Species That Are OBL, FACW, or FAC: 25% (A/B)

**Prevalence Index worksheet:**

| Total % Cover of: | | Multiply by: |
|---|---|---|
| OBL species | 0 | x 1 = 0 |
| FACW species | 0 | x 2 = 0 |
| FAC species | 4 | x 3 = 12 |
| FACU species | 66 | x 4 = 264 |
| UPL species | 0 | x 5 = 0 |
| Column Totals: | 70 (A) | 276 (B) |

Prevalence Index = B/A = 3.94

**Hydrophytic Vegetation Indicators:**

No 1 - Rapid Test for Hydrophytic Vegetation

No 2 - Dominance Test is >50%

No 3 - Prevalence Index is ≤3.0[1]

No Problematic Hydrophytic Vegetation[1] (Explain in Remarks or in the delineation report)

[1]Indicators of hydric soil and wetland hydrology must be present, unless disturbed or problematic.

**Hydrophytic Vegetation Present?** Yes ____ No X

Remarks: This sampling point lies near the edge of a broad drainage channel that flows from Kamehameha V Highway into Kokeo wetland. The vegetation was largely facultative upland in character.

## SOIL

Sampling Point: 1

**Profile Description:** (Describe to the depth needed to document the indicator or confirm the absence of indicators.)

| Depth (inches) | Matrix Color (moist) | % | Redox Features Color (moist) | % | Type[1] | Loc[2] | Texture | Remarks |
|---|---|---|---|---|---|---|---|---|
| 0-18 | 2.5YR 3/1 | 100 | - | - | - | - | silt loam | vesicular, dark reddish brown |
| 18-24 | 2.5YR 4/1 | 100 | - | - | - | - | clay loam | saturated, dark reddish gray |
| | | | | | | | | |
| | | | | | | | | |
| | | | | | | | | |
| | | | | | | | | |
| | | | | | | | | |

[1]Type: C=Concentration, D=Depletion, RM=Reduced Matrix, MS=Masked Sand Grains. [2]Location: PL=Pore Lining, M=Matrix.

**Hydric Soil Indicators:**

- ___ Histosol (A1)
- ___ Histic Epipedon (A2)
- ___ Black Histic (A3)
- ___ Hydrogen Sulfide (A4)
- ___ Muck Presence (A8)
- ___ Depleted Below Dark Surface (A11)
- ___ Thick Dark Surface (A12)
- ___ Sandy Gleyed Matrix (S4)
- ___ Sandy Redox (S5)
- ___ Dark Surface (S7)
- ___ Loamy Gleyed Matrix (F2)
- ___ Depleted Matrix (F3)
- ___ Redox Dark Surface (F6)
- ___ Depleted Dark Surface (F7)
- ___ Redox Depressions (F8)

**Indicators for Problematic Hydric Soils[3]:**

- ___ Stratified Layers (A5)
- ___ Sandy Mucky Mineral (S1)
- ___ Red Parent Material (F21)
- ___ Very Shallow Dark Surface (TF12)
- ___ Other (Explain in Remarks)

[3]Indicators of hydrophytic vegetation and wetland hydrology must be present, unless disturbed or problematic.

**Restrictive Layer (if observed):**

Type: none

Depth (inches): ___

**Hydric Soil Present?** Yes ___ No X

Remarks:

The soil at this site does not have any positive indicators of a hydric soil.

## HYDROLOGY

**Wetland Hydrology Indicators:** (Explain observations in Remarks, if needed.)

Primary Indicators (minimum of one required; check all that apply)

- ___ Surface Water (A1)
- ___ High Water Table (A2)
- ___ Saturation (A3)
- ___ Water Marks (B1)
- ___ Sediment Deposits (B2)
- ___ Drift Deposits (B3)
- ___ Algal Mat or Crust (B4)
- ___ Iron Deposits (B5)
- ___ Inundation Visible on Aerial Imagery (B7)
- ___ Water-Stained Leaves (B9)
- ___ Aquatic Fauna (B13)
- ___ Tilapia Nests (B17)
- ___ Hydrogen Sulfide Odor (C1)
- ___ Oxidized Rhizospheres on Living Roots (C3)
- ___ Presence of Reduced Iron (C4)
- ___ Recent Iron Reduction in Tilled Soils (C6)
- ___ Thin Muck Surface (C7)
- ___ Fiddler Crab Burrows (C10) (Guam, CNMI, and American Samoa)
- ___ Other (Explain in Remarks)

Secondary Indicators (minimum of two required)

- ___ Surface Soil Cracks (B6)
- ___ Sparsely Vegetated Concave Surface (B8)
- ___ Drainage Patterns (B10)
- ___ Dry-Season Water Table (C2)
- ___ Salt Deposits (C5)
- ___ Stunted or Stressed Plants (D1)
- ___ Geomorphic Position (D2)
- ___ Shallow Aquitard (D3)
- ___ FAC-Neutral Test (D5)

**Field Observations:**

Surface Water Present? Yes ___ No X Depth (inches): ___

Water Table Present? Yes X No ___ Depth (inches): 22 in.

Saturation Present? (includes capillary fringe) Yes X No ___ Depth (inches): 18 in.

**Wetland Hydrology Present?** Yes ___ No X

Describe Recorded Data (stream gauge, monitoring well, aerial photos, previous inspections), if available:

Remarks:

This site floods for short periods following heavy rainfall events but groundwater levels retreat to depths that prevent the development of positive indicators of wetland hydrology.



Sampling Point 1A. Upper edge of wetland. Inflow from the Kamehameha V Highway is aligned with the telephone pole. The elevated DHHL project boundary is along the fenceline on the right



Sampling Point 1B. Dark reddish-brown silt loam over dark reddish gray clay loam. Soil saturated at 18 inches, water table at 22 inches.

## WETLAND DETERMINATION DATA FORM – Hawai'i and Pacific Islands Region

Project/Site: DHHL Kapa'akea Road Mitigation Project City: Kapa'akea Sampling Date: 1-08-16 Time: 0830

Applicant/Owner: Department of Hawaiian Home Lands State/Terr/Comith.: Hawaii Island: Moloka'i Sampling Point: 2

Investigator(s): Robert Hobdy TMK/Parcel: (2)5-4-07:9,10,11 24,25

Landform (hillslope, coastal plain, etc.): Coastal Plain Local relief (concave, convex, none): Concave

Lat: 21°05'04.92" N Long: 157°00'45.2" W Datum: WGS Slope (%): 0-1%

Soil Map Unit Name: Keaiia Silt Loam NWI classification: PEM13

Are climatic / hydrologic conditions on the site typical for this time of year? Yes X No ____ (If no, explain in Remarks.)

Are Vegetation Yes, Soil No or Hydrology No significantly disturbed? Are "Normal Circumstances" present? Yes X No ____

Are Vegetation No, Soil No or Hydrology No naturally problematic? (If needed, explain any answers in Remarks.)

### SUMMARY OF FINDINGS – Attach site map showing sampling point locations, transects, important features, etc.

| | | | |
|---|---|---|---|
| Hydrophytic Vegetation Present? | Yes X | No ____ | **Is the Sampled Area within a Wetland?** Yes ____ No X |
| Hydric Soil Present? | Yes ____ | No X | |
| Wetland Hydrology Present? | Yes ____ | No X | |

Remarks: The boundary of the DHHL lot stands about 2.5 ft. higher than this sampling point which is near the base of the slope between them.

### VEGETATION – Use scientific names of plants.

| Tree Stratum (Plot size: 30 ft radius) | Absolute % Cover | Dominant Species? | Indicator Status |
|---|---|---|---|
| 1. Prosopis pallida | 40 | Yes | FACU |
| 2. | | | |
| 3. | | | |
| 4. | | | |
| 5. | | | |
| | 40 = Total Cover | | |
| **Sapling/Shrub Stratum** (Plot size: 30 ft radius) | | | |
| 1. Pluchea indica | 20 | Yes | FAC |
| 2. Pluchea carolinensis | 5 | Yes | FAC |
| 3. | | | |
| 4. | | | |
| 5. | | | |
| | 25 = Total Cover | | |
| **Herb Stratum** (Plot size: 30 ft radius) | | | |
| 1. Cynodon dactylon | 15 | Yes | FACU |
| 2. Megathyrsus maximus | 5 | Yes | FAC |
| 3. Chloris barbata | 1 | No | FACU |
| 4. Heliotropium curassavicum | 1 | No | FAC |
| 5. | | | |
| 6. | | | |
| 7. | | | |
| 8. | | | |
| | 22 = Total Cover | | |
| **Woody Vine Stratum** (Plot size: ____) | | | |
| 1. | | | |
| 2. | | | |
| | 0 = Total Cover | | |

**Dominance Test worksheet:**

Number of Dominant Species That Are OBL, FACW, or FAC: 3 (A)

Total Number of Dominant Species Across All Strata: 5 (B)

Percent of Dominant Species That Are OBL, FACW, or FAC: 60% (A/B)

**Prevalence Index worksheet:**

| Total % Cover of: | | Multiply by: | |
|---|---|---|---|
| OBL species | 0 | x 1 = | 0 |
| FACW species | 0 | x 2 = | 0 |
| FAC species | 31 | x 3 = | 93 |
| FACU species | 56 | x 4 = | 224 |
| UPL species | 0 | x 5 = | 0 |
| Column Totals: | 87 (A) | | 317 (B) |

Prevalence Index = B/A = 3.64

**Hydrophytic Vegetation Indicators:**

No 1 - Rapid Test for Hydrophytic Vegetation

Yes 2 - Dominance Test is >50%

No 3 - Prevalence Index is ≤3.0[1]

Yes 4 - Problematic Hydrophytic Vegetation[1] (Explain in Remarks or in the delineation report)

[1]Indicators of hydric soil and wetland hydrology must be present, unless disturbed or problematic.

**Hydrophytic Vegetation Present?** Yes X No ____

Remarks: Much of the vegetation around this sampling Point had been mowed and is maintained mostly free of vegetation as part of a cooperative wetland enhancement project for a variety of waterbirds and Shorebirds. While sparse, the vegetation is still representative of what naturally grows here.

## SOIL

Sampling Point: 2

**Profile Description:** (Describe to the depth needed to document the indicator or confirm the absence of indicators.)

| Depth (inches) | Matrix Color (moist) | % | Redox Features Color (moist) | % | Type[1] | Loc[2] | Texture | Remarks |
|---|---|---|---|---|---|---|---|---|
| 0-18 | 2.5YR 3/4 | 100 | — | — | — | — | silt loam | dark reddish brown unstructured |
| | | | | | | | | |
| | | | | | | | | |
| | | | | | | | | |
| | | | | | | | | |
| | | | | | | | | |

[1]Type: C=Concentration, D=Depletion, RM=Reduced Matrix, MS=Masked Sand Grains. [2]Location: PL=Pore Lining, M=Matrix.

**Hydric Soil Indicators:**

- ___ Histosol (A1)
- ___ Histic Epipedon (A2)
- ___ Black Histic (A3)
- ___ Hydrogen Sulfide (A4)
- ___ Muck Presence (A8)
- ___ Depleted Below Dark Surface (A11)
- ___ Thick Dark Surface (A12)
- ___ Sandy Gleyed Matrix (S4)
- ___ Sandy Redox (S5)
- ___ Dark Surface (S7)
- ___ Loamy Gleyed Matrix (F2)
- ___ Depleted Matrix (F3)
- ___ Redox Dark Surface (F6)
- ___ Depleted Dark Surface (F7)
- ___ Redox Depressions (F8)

**Indicators for Problematic Hydric Soils[3]:**

- ___ Stratified Layers (A5)
- ___ Sandy Mucky Mineral (S1)
- ___ Red Parent Material (F21)
- ___ Very Shallow Dark Surface (TF12)
- ___ Other (Explain in Remarks)

[3]Indicators of hydrophytic vegetation and wetland hydrology must be present, unless disturbed or problematic.

**Restrictive Layer (if observed):**

Type: none

Depth (inches): ___

**Hydric Soil Present?** Yes ___ No X

**Remarks:**

The soil at this site does not have any positive indicators of a hydric soil. This sampling point lies along a slope running down from the adjacent DWHL Lot. The wetland boundary appears to be at the toe of this slope which is 14 feet from the DWHL Lot.

## HYDROLOGY

**Wetland Hydrology Indicators:** (Explain observations in Remarks, if needed.)

Primary Indicators (minimum of one required; check all that apply)

- ___ Surface Water (A1)
- ___ High Water Table (A2)
- ___ Saturation (A3)
- ___ Water Marks (B1)
- ___ Sediment Deposits (B2)
- ___ Drift Deposits (B3)
- ___ Algal Mat or Crust (B4)
- ___ Iron Deposits (B5)
- ___ Inundation Visible on Aerial Imagery (B7)
- ___ Water-Stained Leaves (B9)
- ___ Aquatic Fauna (B13)
- ___ Tilapia Nests (B17)
- ___ Hydrogen Sulfide Odor (C1)
- ___ Oxidized Rhizospheres on Living Roots (C3)
- ___ Presence of Reduced Iron (C4)
- ___ Recent Iron Reduction in Tilled Soils (C6)
- ___ Thin Muck Surface (C7)
- ___ Fiddler Crab Burrows (C10) (Guam, CNMI, and American Samoa)
- ___ Other (Explain in Remarks)

Secondary Indicators (minimum of two required)

- ___ Surface Soil Cracks (B6)
- ___ Sparsely Vegetated Concave Surface (B8)
- ___ Drainage Patterns (B10)
- ___ Dry-Season Water Table (C2)
- ___ Salt Deposits (C5)
- ___ Stunted or Stressed Plants (D1)
- ___ Geomorphic Position (D2)
- ___ Shallow Aquitard (D3)
- ___ FAC-Neutral Test (D5)

**Field Observations:**

Surface Water Present? Yes ___ No X Depth (inches): ___

Water Table Present? Yes ___ No X Depth (inches): ___

Saturation Present? (includes capillary fringe) Yes ___ No X Depth (inches): ___

**Wetland Hydrology Present?** Yes ___ No X

Describe Recorded Data (stream gauge, monitoring well, aerial photos, previous inspections), if available:

**Remarks:**

While close to the wetland boundary, this sampling point does not have any positive signs of wetland hydrology.



Sampling Point 2A. Located near the bottom of the slope below the DHHL lot boundary.



Sampling Point 2B. Dark reddish-brown silt. Loam to 18 inches depth.
Did not reach saturation or water table depths.

## WETLAND DETERMINATION DATA FORM – Hawai'i and Pacific Islands Region

Project/Site: DHHL Kapa'akea Flood Mitigation Project City: Kapa'akea Sampling Date: 1-08-14 Time: 0850

Applicant/Owner: Department of Hawaiian Home Lands State/Terr/Comth: Hawaii Island: Moloka'i Sampling Point: 3

Investigator(s): Robert Hobdy TMK/Parcel(s): 5-4-07: 9, 10, 11, 24, 25

Landform (hillslope, coastal plain, etc.): Coastal Plain Local relief (concave, convex, none): Concave

Lat: 21° 05' 04.29" N Long: 157° 00' 45.58" W Datum: WGS84 Slope (%): 0 - 1%

Soil Map Unit Name: Keaiia Silt Loam NWI classification: PEM13

Are climatic / hydrologic conditions on the site typical for this time of year? Yes X No ____ (If no, explain in Remarks.)

Are Vegetation Yes, Soil No or Hydrology No significantly disturbed? Are "Normal Circumstances" present? Yes X No ____

Are Vegetation No, Soil No or Hydrology No naturally problematic? (If needed, explain any answers in Remarks.)

### SUMMARY OF FINDINGS – Attach site map showing sampling point locations, transects, important features, etc.

| | | | |
|---|---|---|---|
| Hydrophytic Vegetation Present? | Yes X | No ____ | Is the Sampled Area within a Wetland? Yes ____ No X |
| Hydric Soil Present? | Yes ____ | No X | |
| Wetland Hydrology Present? | Yes ____ | No X | |

Remarks: The boundary of the DHHL lot stands about 2 ft higher than the sampling point which is near the base of the slope between them.

### VEGETATION – Use scientific names of plants.

| | Absolute % Cover | Dominant Species? | Indicator Status |
|---|---|---|---|
| **Tree Stratum** (Plot size: ____) | | | |
| 1. | | | |
| 2. | | | |
| 3. | | | |
| 4. | | | |
| 5. | | | |
| | 0 = Total Cover | | |
| **Sapling/Shrub Stratum** (Plot size: 10-ft radius) | | | |
| 1. Pluchea indica | 5 | Yes | FAC |
| 2. Bidens pilosa | 3 | Yes | FACU |
| 3. | | | |
| 4. | | | |
| 5. | | | |
| | 8 = Total Cover | | |
| **Herb Stratum** (Plot size: 10-ft radius) | | | |
| 1. Batis maritima | 7 | Yes | OBL |
| 2. Heliotropium curassavicum | 3 | Yes | FAC |
| 3. | | | |
| 4. | | | |
| 5. | | | |
| 6. | | | |
| 7. | | | |
| 8. | | | |
| | 10 = Total Cover | | |
| **Woody Vine Stratum** (Plot size: ____) | | | |
| 1. | | | |
| 2. | | | |
| | 0 = Total Cover | | |

**Dominance Test worksheet:**

Number of Dominant Species That Are OBL, FACW, or FAC: 3 (A)

Total Number of Dominant Species Across All Strata: 4 (B)

Percent of Dominant Species That Are OBL, FACW, or FAC: 75% (A/B)

**Prevalence Index worksheet:**

| Total % Cover of: | | Multiply by: | |
|---|---|---|---|
| OBL species | 7 | x 1 = | 7 |
| FACW species | 0 | x 2 = | 0 |
| FAC species | 8 | x 3 = | 24 |
| FACU species | 3 | x 4 = | 12 |
| UPL species | 0 | x 5 = | 0 |
| Column Totals: | 18 (A) | | 43 (B) |

Prevalence Index = B/A = 2.39

**Hydrophytic Vegetation Indicators:**

No 1 - Rapid Test for Hydrophytic Vegetation

Yes 2 - Dominance Test is >50%

Yes 3 - Prevalence Index is ≤3.0*

Yes Problematic Hydrophytic Vegetation* (Explain in Remarks or in the delineation report)

*Indicators of hydric soil and wetland hydrology must be present, unless disturbed or problematic.

**Hydrophytic Vegetation Present?** Yes X No ____

Remarks: Much of the vegetation around this sampling point had been mowed and is maintained mostly free of vegetation as part of a cooperative wetland enhancement project for a variety of waterbirds and shorebirds. While sparse, the vegetation is still representative of what naturally grows here.

## SOIL

Sampling Point: 3

**Profile Description:** (Describe to the depth needed to document the indicator or confirm the absence of indicators.)

| Depth (inches) | Matrix Color (moist) | % | Redox Features Color (moist) | % | Type[1] | Loc[2] | Texture | Remarks |
|---|---|---|---|---|---|---|---|---|
| 0-17 | 2.5YR 3/4 | 100 | - | - | - | - | Silt Loam | dark reddish brown w/ small rocks |
| 17-20 | 2.5YR 3/3 | 100 | - | - | - | - | Silty clay Loam | dicky mud, saturated |

[1]Type: C=Concentration, D=Depletion, RM=Reduced Matrix, MS=Masked Sand Grains. [2]Location: PL=Pore Lining, M=Matrix.

**Hydric Soil Indicators:**

- ___ Histosol (A1)
- ___ Histic Epipedon (A2)
- ___ Black Histic (A3)
- ___ Hydrogen Sulfide (A4)
- ___ Muck Presence (A8)
- ___ Depleted Below Dark Surface (A11)
- ___ Thick Dark Surface (A12)
- ___ Sandy Gleyed Matrix (S4)
- ___ Sandy Redox (S5)
- ___ Dark Surface (S7)
- ___ Loamy Gleyed Matrix (F2)
- ___ Depleted Matrix (F3)
- ___ Redox Dark Surface (F6)
- ___ Depleted Dark Surface (F7)
- ___ Redox Depressions (F8)

**Indicators for Problematic Hydric Soils[3]:**

- ___ Stratified Layers (A5)
- ___ Sandy Mucky Mineral (S1)
- ___ Red Parent Material (F21)
- ___ Very Shallow Dark Surface (TF12)
- ___ Other (Explain in Remarks)

[3]Indicators of hydrophytic vegetation and wetland hydrology must be present, unless disturbed or problematic.

**Restrictive Layer (if observed):**

Type: None

Depth (inches): _____

**Hydric Soil Present?** Yes _____ No X

Remarks: The soil at this sampling point does not have any positive indicators of a hydric soil. This sampling point lies along a slope running down from the adjacent DHHL lot. The wetland boundary appears to be at the toe of this slope which is 18 feet from the DHHL lot.

## HYDROLOGY

**Wetland Hydrology Indicators:** (Explain observations in Remarks, if needed.)

Primary Indicators (minimum of one required; check all that apply)

- ___ Surface Water (A1)
- ___ High Water Table (A2)
- ___ Saturation (A3)
- ___ Water Marks (B1)
- ___ Sediment Deposits (B2)
- ___ Drift Deposits (B3)
- ___ Algal Mat or Crust (B4)
- ___ Iron Deposits (B5)
- ___ Inundation Visible on Aerial Imagery (B7)
- ___ Water-Stained Leaves (B9)
- ___ Aquatic Fauna (B13)
- ___ Tilapia Nests (B17)
- ___ Hydrogen Sulfide Odor (C1)
- ___ Oxidized Rhizospheres on Living Roots (C3)
- ___ Presence of Reduced Iron (C4)
- ___ Recent Iron Reduction in Tilled Soils (C6)
- ___ Thin Muck Surface (C7)
- ___ Fiddler Crab Burrows (C10) (Guam, CNMI, and American Samoa)
- ___ Other (Explain in Remarks)

Secondary Indicators (minimum of two required)

- ___ Surface Soil Cracks (B6)
- ___ Sparsely Vegetated Concave Surface (B8)
- ___ Drainage Patterns (B10)
- ___ Dry-Season Water Table (C2)
- ___ Salt Deposits (C5)
- ___ Stunted or Stressed Plants (D1)
- ___ Geomorphic Position (D2)
- ___ Shallow Aquitard (D3)
- ___ FAC-Neutral Test (D5)

**Field Observations:**

Surface Water Present? Yes _____ No X Depth (inches): _____

Water Table Present? Yes Y No _____ Depth (inches): 20 in.

Saturation Present? (includes capillary fringe) Yes X No _____ Depth (inches): 17 in.

**Wetland Hydrology Present?** Yes _____ No X

Describe Recorded Data (stream gauge, monitoring well, aerial photos, previous inspections), if available:

Remarks:

While close to the wetland boundary, this sampling point does not have any positive indicators of wetland hydrology.



Sampling Point 3A. Located near the bottom of the slope below the DHHL lot boundary.



Sampling Point 3B. Dark reddish-brown silt loam over dusky red silty clay loam. Saturation at 17 inches. Water table at 20 inches.

## WETLAND DETERMINATION DATA FORM – Hawai'i and Pacific Islands Region

Project/Site: DHHL Kapaakea Flood Mitigation Project City: Kapaakea Sampling Date: 1-08-16 Time: 0915

Applicant/Owner: Department of Hawaiian Home Lands State/Terr/Comlth: Hawaii Island: Maui Sampling Point: 4

Investigator(s): Robert Hobdy TMK/Parcel: (2)5-4-07: 9, 10, 11, 24, 25

Landform (hillslope, coastal plain, etc.): Coastal Plain Local relief (concave, convex, none): Concave

Lat: 21° 05' 03.41" N Long: 157° 00' 45.97" W Datum: 3 ft. Slope (%): 0-1%

Soil Map Unit Name: Kealia Silt Loam NWI classification: PEM13

Are climatic / hydrologic conditions on the site typical for this time of year? Yes X No ____ (If no, explain in Remarks.)

Are Vegetation Yes, Soil No or Hydrology No significantly disturbed? Are "Normal Circumstances" present? Yes X No ____

Are Vegetation No, Soil No or Hydrology No naturally problematic? (If needed, explain any answers in Remarks.)

### SUMMARY OF FINDINGS – Attach site map showing sampling point locations, transects, important features, etc.

| | | | |
|---|---|---|---|
| Hydrophytic Vegetation Present? | Yes X | No ____ | Is the Sampled Area within a Wetland? Yes ____ No ____ |
| Hydric Soil Present? | Yes ____ | No ____ | |
| Wetland Hydrology Present? | Yes ____ | No ____ | |

Remarks: The boundary of the DHHL lot stands about 3 ft above the sampling point which is near the base of the slope between them.

### VEGETATION – Use scientific names of plants.

| Tree Stratum (Plot size: ____) | Absolute % Cover | Dominant Species? | Indicator Status |
|---|---|---|---|
| 1. | | | |
| 2. | | | |
| 3. | | | |
| 4. | | | |
| 5. | | | |
| | 0 = Total Cover | | |
| **Sapling/Shrub Stratum (Plot size: 10 ft radius)** | | | |
| 1. Pluchea indica | 25 | Yes | FAC |
| 2. | | | |
| 3. | | | |
| 4. | | | |
| 5. | | | |
| | 25 = Total Cover | | |
| **Herb Stratum (Plot size: 10 ft radius)** | | | |
| 1. Batis maritima | 40 | Yes | OBL |
| 2. Cynodon dactylon | 10 | Yes | FACU |
| 3. | | | |
| 4. | | | |
| 5. | | | |
| 6. | | | |
| 7. | | | |
| 8. | | | |
| | 50 = Total Cover | | |
| **Woody Vine Stratum (Plot size: ____)** | | | |
| 1. | | | |
| 2. | | | |
| | ____ = Total Cover | | |

**Dominance Test worksheet:**

Number of Dominant Species That Are OBL, FACW, or FAC: 2 (A)

Total Number of Dominant Species Across All Strata: 3 (B)

Percent of Dominant Species That Are OBL, FACW, or FAC: 67% (A/B)

**Prevalence Index worksheet:**

| Total % Cover of: | | Multiply by: |
|---|---|---|
| OBL species | 40 | x 1 = 40 |
| FACW species | 0 | x 2 = 0 |
| FAC species | 25 | x 3 = 75 |
| FACU species | 10 | x 4 = 40 |
| UPL species | 0 | x 5 = 0 |
| Column Totals: | 75 (A) | 155 (B) |

Prevalence Index = B/A = 2.06

**Hydrophytic Vegetation Indicators:**

No 1 - Rapid Test for Hydrophytic Vegetation

Yes 2 - Dominance Test is >50%

Yes 3 - Prevalence Index is ≤3.0[1]

Yes Problematic Hydrophytic Vegetation[1] (Explain in Remarks or in the delineation report)

[1]Indicators of hydric soil and wetland hydrology must be present, unless disturbed or problematic.

**Hydrophytic Vegetation Present?** Yes X No ____

Remarks: Much of the vegetation around this sampling point had been mowed and is maintained mostly free of vegetation as part of a cooperative wetland enhancement project for a variety of waterbirds and shorebirds. While sparse, the vegetation is still representative of what naturally grows here.

## SOIL

Sampling Point: 4

**Profile Description:** (Describe to the depth needed to document the indicator or confirm the absence of indicators.)

| Depth (inches) | Matrix Color (moist) | Matrix % | Redox Features Color (moist) | Redox Features % | Redox Features Type[1] | Redox Features Loc[2] | Texture | Remarks |
|---|---|---|---|---|---|---|---|---|
| 0-19 | 2.5YR 3/4 | 100 | – | – | – | – | Silt loam | dark reddish-brown WASTEWATER |
| 19-23 | 2.5YR 3/3 | 100 | – | – | – | – | silty clay loam | dusky red, saturated |
| | | | | | | | | |
| | | | | | | | | |
| | | | | | | | | |
| | | | | | | | | |
| | | | | | | | | |

[1]Type: C=Concentration, D=Depletion, RM=Reduced Matrix, MS=Masked Sand Grains. [2]Location: PL=Pore Lining, M=Matrix.

**Hydric Soil Indicators:**

- ___ Histosol (A1)
- ___ Histic Epipedon (A2)
- ___ Black Histic (A3)
- ___ Hydrogen Sulfide (A4)
- ___ Muck Presence (A8)
- ___ Depleted Below Dark Surface (A11)
- ___ Thick Dark Surface (A12)
- ___ Sandy Gleyed Matrix (S4)
- ___ Sandy Redox (S5)
- ___ Dark Surface (S7)
- ___ Loamy Gleyed Matrix (F2)
- ___ Depleted Matrix (F3)
- ___ Redox Dark Surface (F6)
- ___ Depleted Dark Surface (F7)
- ___ Redox Depressions (F8)

**Indicators for Problematic Hydric Soils[3]:**

- ___ Stratified Layers (A5)
- ___ Sandy Mucky Mineral (S1)
- ___ Red Parent Material (F21)
- ___ Very Shallow Dark Surface (TF12)
- ___ Other (Explain in Remarks)

[3]Indicators of hydrophytic vegetation and wetland hydrology must be present, unless disturbed or problematic.

**Restrictive Layer (if observed):**

Type: none

Depth (inches): _____

**Hydric Soil Present?** Yes _____ No X

Remarks: The soil at this sampling point does not have any positive indicators of a hydric soil. This sampling point lies along a slope running down from the adjacent DHHL lot. The wetland boundary appears to be at the toe of this slope which is 18 feet from the DHHL lot.

## HYDROLOGY

**Wetland Hydrology Indicators:** (Explain observations in Remarks, if needed.)

Primary Indicators (minimum of one required; check all that apply)

- ___ Surface Water (A1)
- ___ High Water Table (A2)
- ___ Saturation (A3)
- ___ Water Marks (B1)
- ___ Sediment Deposits (B2)
- ___ Drift Deposits (B3)
- ___ Algal Mat or Crust (B4)
- ___ Iron Deposits (B5)
- ___ Inundation Visible on Aerial Imagery (B7)
- ___ Water-Stained Leaves (B9)
- ___ Aquatic Fauna (B13)
- ___ Tilapia Nests (B17)
- ___ Hydrogen Sulfide Odor (C1)
- ___ Oxidized Rhizospheres on Living Roots (C3)
- ___ Presence of Reduced Iron (C4)
- ___ Recent Iron Reduction in Tilled Soils (C6)
- ___ Thin Muck Surface (C7)
- ___ Fiddler Crab Burrows (C10) (Guam, CNMI, and American Samoa)
- ___ Other (Explain in Remarks)

Secondary Indicators (minimum of two required)

- ___ Surface Soil Cracks (B6)
- ___ Sparsely Vegetated Concave Surface (B8)
- ___ Drainage Patterns (B10)
- ___ Dry-Season Water Table (C2)
- ___ Salt Deposits (C5)
- ___ Stunted or Stressed Plants (D1)
- ___ Geomorphic Position (D2)
- ___ Shallow Aquitard (D3)
- ___ FAC-Neutral Test (D5)

**Field Observations:**

Surface Water Present? Yes _____ No X Depth (inches):

Water Table Present? Yes X No _____ Depth (inches): 23 in.

Saturation Present? (includes capillary fringe) Yes X No _____ Depth (inches): 19 in.

**Wetland Hydrology Present?** Yes _____ No X

Describe Recorded Data (stream gauge, monitoring well, aerial photos, previous inspections), if available:

Remarks: While close to the wetland boundary, this sampling point does not have any positive indicators of wetland hydrology.



Sampling Point 4A. Located near the bottom of the slope below the DHHL lot boundary.



Sampling Point 4B. Dark reddish-brown silt loam over dusky red silty clay loam. Saturation at 19 inches. Water table at 23 inches.

## WETLAND DETERMINATION DATA FORM – Hawai'i and Pacific Islands Region

Project/Site: DHHL Kapa'akea Flood Mitigation Project City: Kapa'akea Sampling Date: 1-08-16 Time: 0945

Applicant/Owner: Department of Hawaiian Home Lands State/Terr/Comlth: Hawai'i Island: Moloka'i Sampling Point: 5

Investigator(s): Robert Hobby TMK/Parcel: (2) 5-4-7:3, 10, 11;

Landform (hillslope, coastal plain, etc.): coastal plain Local relief (concave, convex, none): concave

Lat: 21° 05' 02.55" N Long: 157° 00' 46.40" W Datum: WGS Slope (%): 0-1 %

Soil Map Unit Name: Keaiwa Silt Loam NWI classification: PEM13

Are climatic / hydrologic conditions on the site typical for this time of year? Yes X No ____ (If no, explain in Remarks.)

Are Vegetation Yes, Soil ND or Hydrology ND significantly disturbed? Are "Normal Circumstances" present? Yes X No ____

Are Vegetation ND Soil ND or Hydrology ND naturally problematic? (If needed, explain any answers in Remarks.)

### SUMMARY OF FINDINGS – Attach site map showing sampling point locations, transects, important features, etc.

| | | | |
|---|---|---|---|
| Hydrophytic Vegetation Present? | Yes ____ | No X | **Is the Sampled Area within a Wetland?** Yes ____ No X |
| Hydric Soil Present? | Yes ____ | No X | |
| Wetland Hydrology Present? | Yes ____ | No X | |

Remarks: The boundary of the DHHL lot stands about 2 ft higher than the sampling point which is near the base of the slope between them.

### VEGETATION – Use scientific names of plants.

| Tree Stratum (Plot size: ____) | Absolute % Cover | Dominant Species? | Indicator Status |
|---|---|---|---|
| 1. | | | |
| 2. | | | |
| 3. | | | |
| 4. | | | |
| 5. | | | |
| | 0 = Total Cover | | |
| **Sapling/Shrub Stratum** (Plot size: ____) | | | |
| 1. | | | |
| 2. | | | |
| 3. | | | |
| 4. | | | |
| 5. | | | |
| | 0 = Total Cover | | |
| **Herb Stratum** (Plot size: 10ft radius) | | | |
| 1. Cynodon dactylon | 20 | Yes | FACU |
| 2. Heliotropium curassavicum | 2 | ND | FAC |
| 3. | | | |
| 4. | | | |
| 5. | | | |
| 6. | | | |
| 7. | | | |
| 8. | | | |
| | 22 = Total Cover | | |
| **Woody Vine Stratum** (Plot size: ____) | | | |
| 1. | | | |
| 2. | | | |
| | 0 = Total Cover | | |

**Dominance Test worksheet:**

Number of Dominant Species That Are OBL, FACW, or FAC: 0 (A)

Total Number of Dominant Species Across All Strata: 1 (B)

Percent of Dominant Species That Are OBL, FACW, or FAC: 0% (A/B)

**Prevalence Index worksheet:**

| Total % Cover of: | | Multiply by: | |
|---|---|---|---|
| OBL species | ____ | x 1 = | ____ |
| FACW species | ____ | x 2 = | ____ |
| FAC species | 2 | x 3 = | 6 |
| FACU species | 20 | x 4 = | 80 |
| UPL species | ____ | x 5 = | ____ |
| Column Totals: | 22 (A) | | 86 (B) |

Prevalence Index = B/A = 3.91

**Hydrophytic Vegetation Indicators:**

ND 1 - Rapid Test for Hydrophytic Vegetation

ND 2 - Dominance Test is >50%

ND 3 - Prevalence Index is ≤3.0[1]

Yes Problematic Hydrophytic Vegetation[1] (Explain in Remarks or in the delineation report)

[1]Indicators of hydric soil and wetland hydrology must be present, unless disturbed or problematic.

**Hydrophytic Vegetation Present?** Yes ____ No X

Remarks: Much of the vegetation around this sampling point had been mowed and is maintained mostly free of vegetation as part of a cooperative wetland enhancement project for a variety of waterbirds and shorebirds. While sparse, the vegetation is still representative of what naturally grows here.

## SOIL

Sampling Point: 5

**Profile Description:** (Describe to the depth needed to document the indicator or confirm the absence of indicators.)

| Depth (inches) | Matrix Color (moist) | % | Redox Features Color (moist) | % | Type[1] | Loc[2] | Texture | Remarks |
|---|---|---|---|---|---|---|---|---|
| 0-14 | 2.5YR 3/4 | 100 | — | — | — | — | silt loam | dark reddish-brown moderately sorted |
| 14-24 | 2.5YR 4/1 | 100 | — | — | — | — | clay loam | dark reddish-gray |
| | | | | | | | | |
| | | | | | | | | |
| | | | | | | | | |
| | | | | | | | | |
| | | | | | | | | |

[1]Type: C=Concentration, D=Depletion, RM=Reduced Matrix, MS=Masked Sand Grains. [2]Location: PL=Pore Lining, M=Matrix.

**Hydric Soil Indicators:**

- ___ Histosol (A1)
- ___ Histic Epipedon (A2)
- ___ Black Histic (A3)
- ___ Hydrogen Sulfide (A4)
- ___ Muck Presence (A8)
- ___ Depleted Below Dark Surface (A11)
- ___ Thick Dark Surface (A12)
- ___ Sandy Gleyed Matrix (S4)
- ___ Sandy Redox (S5)
- ___ Dark Surface (S7)
- ___ Loamy Gleyed Matrix (F2)
- ___ Depleted Matrix (F3)
- ___ Redox Dark Surface (F6)
- ___ Depleted Dark Surface (F7)
- ___ Redox Depressions (F8)

**Indicators for Problematic Hydric Soils[3]:**

- ___ Stratified Layers (A5)
- ___ Sandy Mucky Mineral (S1)
- ___ Red Parent Material (F21)
- ___ Very Shallow Dark Surface (TF12)
- ___ Other (Explain in Remarks)

[3]Indicators of hydrophytic vegetation and wetland hydrology must be present, unless disturbed or problematic.

**Restrictive Layer (if observed):**

Type: hose

Depth (inches): _____

**Hydric Soil Present?** Yes _____ No X

**Remarks:** The soil at this sampling point does not have any positive indicators of a hydric soil. This sampling point lies along a slope running down from the adjacent DHHL lot. The wetland boundary appears to be at the toe of the slope which is 14 feet from from the DHHL lot.

## HYDROLOGY

**Wetland Hydrology Indicators:** (Explain observations in Remarks, if needed.)

Primary Indicators (minimum of one required; check all that apply)

- ___ Surface Water (A1)
- ___ High Water Table (A2)
- ___ Saturation (A3)
- ___ Water Marks (B1)
- ___ Sediment Deposits (B2)
- ___ Drift Deposits (B3)
- ___ Algal Mat or Crust (B4)
- ___ Iron Deposits (B5)
- ___ Inundation Visible on Aerial Imagery (B7)
- ___ Water-Stained Leaves (B9)
- ___ Aquatic Fauna (B13)
- ___ Tilapia Nests (B17)
- ___ Hydrogen Sulfide Odor (C1)
- ___ Oxidized Rhizospheres on Living Roots (C3)
- ___ Presence of Reduced Iron (C4)
- ___ Recent Iron Reduction in Tilled Soils (C6)
- ___ Thin Muck Surface (C7)
- ___ Fiddler Crab Burrows (C10) (Guam, CNMI, and American Samoa)
- ___ Other (Explain in Remarks)

Secondary Indicators (minimum of two required)

- ___ Surface Soil Cracks (B6)
- ___ Sparsely Vegetated Concave Surface (B8)
- ___ Drainage Patterns (B10)
- ___ Dry-Season Water Table (C2)
- ___ Salt Deposits (C5)
- ___ Stunted or Stressed Plants (D1)
- ___ Geomorphic Position (D2)
- ___ Shallow Aquitard (D3)
- ___ FAC-Neutral Test (D5)

**Field Observations:**

Surface Water Present? Yes _____ No X Depth (inches):

Water Table Present? Yes X No _____ Depth (inches): 20 in.

Saturation Present? (includes capillary fringe) Yes X No _____ Depth (inches): 17 in.

**Wetland Hydrology Present?** Yes _____ No X

Describe Recorded Data (stream gauge, monitoring well, aerial photos, previous inspections), if available:

**Remarks:** While close to the wetland boundary, this sampling point does not have any positive indicators of wetland hydrology.



Sampling Point 5A. Located near the bottom of the slope below the DHHL Lot boundary.



Sampling Point 5B. Dark reddish-brown silt loam over dark reddish-gray clay loam. Saturation at 17 inches. Water table at 20 inches.

## WETLAND DETERMINATION DATA FORM – Hawai'i and Pacific Islands Region

Project/Site: DHHL Kapa'akea Flood Mitigation Project City: Kapa'akea Sampling Date: 1-08-16 Time: 1150

Applicant/Owner: Department of Hawaiian Home Lands State/Ter/Comth: Hawaii Island: Molokai Sampling Point: 6

Investigator(s): Robert Hobdy TMK/Parcel: (2) 5-4-07: 9, 10, 11, 24, 25

Landform (hillslope, coastal plain, etc.): Coastal plain Local relief (concave, convex, none): Concave

Lat: 21° 05' 01.50" N Long: 157° 00' 46.94" W Datum: 2 1/2 ft. Slope (%): 0-1%

Soil Map Unit Name: Kealia Silt Loam NWI classification: PEM13

Are climatic / hydrologic conditions on the site typical for this time of year? Yes X No ____ (If no, explain in Remarks.)

Are Vegetation Yes Soil Yes or Hydrology No significantly disturbed? Are "Normal Circumstances" present? Yes X No ____

Are Vegetation No Soil NO or Hydrology NO naturally problematic? (If needed, explain any answers in Remarks.)

### SUMMARY OF FINDINGS – Attach site map showing sampling point locations, transects, important features, etc.

| | | |
|---|---|---|
| Hydrophytic Vegetation Present? | Yes X | No ____ |
| Hydric Soil Present? | Yes X | No ____ |
| Wetland Hydrology Present? | Yes X | No ____ |

Is the Sampled Area within a Wetland? Yes X No ____

Remarks: This sampling point was in the wetland boundary that appears to lie only 8 feet outside the DHHL lot boundary.

### VEGETATION – Use scientific names of plants.

| Tree Stratum (Plot size: 30 ft radius) | Absolute % Cover | Dominant Species? | Indicator Status |
|---|---|---|---|
| 1. Prosopis pallida | 20 | Yes | FACU |
| 2. | | | |
| 3. | | | |
| 4. | | | |
| 5. | | | |
| | 20 = Total Cover | | |

| Sapling/Shrub Stratum (Plot size: ____) | | | |
|---|---|---|---|
| 1. | | | |
| 2. | | | |
| 3. | | | |
| 4. | | | |
| 5. | | | |
| | 0 = Total Cover | | |

| Herb Stratum (Plot size: 30 ft. radius) | | | |
|---|---|---|---|
| 1. Batis maritima | 35 | Yes | OBL |
| 2. Heliotropium curassavicum | 1 | NO | FAC |
| 3. | | | |
| 4. | | | |
| 5. | | | |
| 6. | | | |
| 7. | | | |
| 8. | | | |
| | 36 = Total Cover | | |

| Woody Vine Stratum (Plot size: ____) | | | |
|---|---|---|---|
| 1. | | | |
| 2. | | | |
| | 0 = Total Cover | | |

**Dominance Test worksheet:**

Number of Dominant Species That Are OBL, FACW, or FAC: 1 (A)

Total Number of Dominant Species Across All Strata: 2 (B)

Percent of Dominant Species That Are OBL, FACW, or FAC: 50% (A/B)

**Prevalence Index worksheet:**

| Total % Cover of: | | Multiply by: |
|---|---|---|
| OBL species | 35 | x 1 = 35 |
| FACW species | 0 | x 2 = 0 |
| FAC species | 1 | x 3 = 3 |
| FACU species | 20 | x 4 = 80 |
| UPL species | 0 | x 5 = 0 |
| Column Totals: | 56 (A) | 118 (B) |

Prevalence Index = B/A = 2.11

**Hydrophytic Vegetation Indicators:**

No 1 - Rapid Test for Hydrophytic Vegetation

No 2 - Dominance Test is >50%

Yes 3 - Prevalence Index is ≤3.0[1]

Yes Problematic Hydrophytic Vegetation[1] (Explain in Remarks or in the delineation report)

[1]Indicators of hydric soil and wetland hydrology must be present, unless disturbed or problematic.

**Hydrophytic Vegetation Present?** Yes X No ____

Remarks: The vegetation in this sampling point had been largely removed during clearing work done during the wetland enhancement project and has not fully grown back with desireable species. While the vegetation is marginally hydrophytic I have tipped into a positive rating because of the circumstances

## SOIL

Sampling Point: 6

**Profile Description:** (Describe to the depth needed to document the indicator or confirm the absence of indicators.)

| Depth (inches) | Matrix Color (moist) | % | Redox Features Color (moist) | % | Type[1] | Loc[2] | Texture | Remarks |
|---|---|---|---|---|---|---|---|---|
| 0-8 | 2.5YR 5/3 | 100 | — | — | — | — | Silt loam | Reddish brown unstructured |
| 8-20 | 2.5YR 5/3 | 100 | — | — | — | — | silty Sand | Wet red sand saturated water table at 12 in. |
| | | | | | | | | |
| | | | | | | | | |
| | | | | | | | | |
| | | | | | | | | |
| | | | | | | | | |

[1]Type: C=Concentration, D=Depletion, RM=Reduced Matrix, MS=Masked Sand Grains. [2]Location: PL=Pore Lining, M=Matrix.

**Hydric Soil Indicators:**

- ___ Histosol (A1)
- ___ Histic Epipedon (A2)
- ___ Black Histic (A3)
- X Hydrogen Sulfide (A4)
- ___ Muck Presence (A8)
- ___ Depleted Below Dark Surface (A11)
- ___ Thick Dark Surface (A12)
- ___ Sandy Gleyed Matrix (S4)
- ___ Sandy Redox (S5)
- ___ Dark Surface (S7)
- ___ Loamy Gleyed Matrix (F2)
- ___ Depleted Matrix (F3)
- ___ Redox Dark Surface (F6)
- ___ Depleted Dark Surface (F7)
- ___ Redox Depressions (F8)

**Indicators for Problematic Hydric Soils[3]:**

- ___ Stratified Layers (A5)
- ___ Sandy Mucky Mineral (S1)
- ___ Red Parent Material (F21)
- ___ Very Shallow Dark Surface (TF12)
- ___ Other (Explain in Remarks)

[3]Indicators of hydrophytic vegetation and wetland hydrology must be present, unless disturbed or problematic.

**Restrictive Layer (if observed):**

Type: None

Depth (inches): ___

**Hydric Soil Present?** Yes X No

Remarks:

The soil at this sampling point lies at a low point immediately above a low coastal dune. The soil had been disturbed by equipment during habitat enhancement work and did not have typical hydric character.

## HYDROLOGY

**Wetland Hydrology Indicators:** (Explain observations in Remarks, if needed.)

Primary Indicators (minimum of one required; check all that apply)

- ___ Surface Water (A1)
- X High Water Table (A2)
- X Saturation (A3)
- ___ Water Marks (B1)
- ___ Sediment Deposits (B2)
- ___ Drift Deposits (B3)
- ___ Algal Mat or Crust (B4)
- ___ Iron Deposits (B5)
- ___ Inundation Visible on Aerial Imagery (B7)
- ___ Water-Stained Leaves (B9)
- ___ Aquatic Fauna (B13)
- ___ Tidapia Nests (B17)
- ___ Hydrogen Sulfide Odor (C1)
- ___ Oxidized Rhizospheres on Living Roots (C3)
- ___ Presence of Reduced Iron (C4)
- ___ Recent Iron Reduction in Tilled Soils (C6)
- ___ Thin Muck Surface (C7)
- ___ Fiddler Crab Burrows (C10) (Guam, CNMI, and American Samoa)
- ___ Other (Explain in Remarks)

Secondary Indicators (minimum of two required)

- ___ Surface Soil Cracks (B6)
- ___ Sparsely Vegetated Concave Surface (B8)
- ___ Drainage Patterns (B10)
- ___ Dry-Season Water Table (C2)
- X Salt Deposits (C5)
- ___ Stunted or Stressed Plants (D1)
- ___ Geomorphic Position (D2)
- ___ Shallow Aquitard (D3)
- ___ FAC-Neutral Test (D5)

**Field Observations:**

Surface Water Present? Yes ___ No X Depth (inches):

Water Table Present? Yes X No ___ Depth (inches): 12 in.

Saturation Present? (includes capillary fringe) Yes X No ___ Depth (inches): 8 in.

**Wetland Hydrology Present?** Yes X No

Describe Recorded Data (stream gauge, monitoring well, aerial photos, previous inspections), if available:

Remarks:

This sampling point had salt deposits and shallow saturation and water table - It had wetland hydrology.



Sampling Point 6A. Located at the bottom of the slope below the DHHL lot boundary within the margin of the wetland.



Sampling Point 6B. Reddish-brown silt loam over weak red, saturated silty sand. Saturation at 8 inches. Water table at 12 inches.

# ATTACHMENT 2.

# Kapa'akea Flood Mitigation Project Boundary and Wetland Boundary Map (By Robert Hobdy)




Figure 2.

---------- DHHL Kapa'akea Flood Mitigation Project boundary

---------- Proposed concrete wall along west and north boundaries of project area.

- - - - - - - - - - > Runoff flow pattern of unnamed drainage along west boundary of project area.

③——④——⑤ Numbered sampling points and proposed wetland boundary

# ATTACHMENT 3.

# Project Plans

# KAPAAKEA FLOOD MITIGATION IMPROVEMENTS

FOR THE
DEPARTMENT OF HAWAIIAN HOME LANDS

KAUNAKAKAI, MOLOKAI 96748
TAX MAP KEY: (2) 5-4-007: 009, 010, 011, 024 & 025
JOB NO.: PS-14-LDD-008

## VICINITY MAP

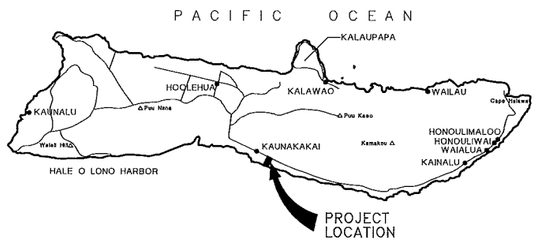


ISLAND OF MOLOKAI

## PROJECT LOCATION

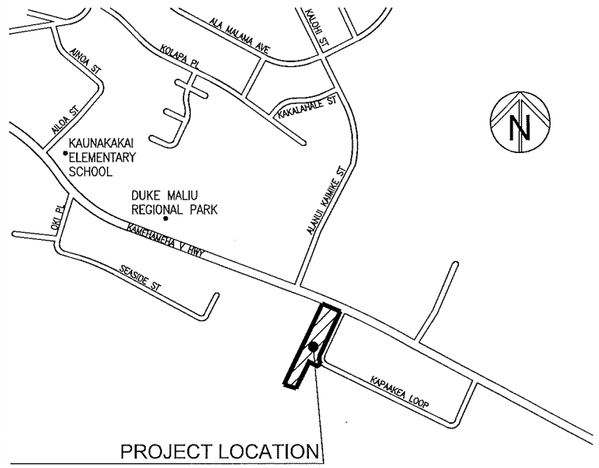


PROJECT LOCATION
KAPAAKEA FLOOD MITIGATION IMPROVEMENTS
KAUNAKAKAI, MOLOKAI 96748

APPROVED:

CHAIRMAN, HAWAIIAN HOMES COMMISSION
DEPARTMENT OF HAWAIIAN HOME LANDS
STATE OF HAWAII

DATE

| REVISION NO. | SYM. | DESCRIPTION | SHT ___ OF ___ | DATE |
|---|---|---|---|---|
| | | | | |

CHAD M. MCDONALD
LICENSED PROFESSIONAL ENGINEER
No. 9793-C
HAWAII, U.S.A.

This work was prepared by me or under my supervision

4/30/2016
MITSUNAGA & ASSOCIATES, INC. EXP. DATE

NOTE: Contractor to check and verify dimensions at job before proceeding with work.

DEPARTMENT OF HAWAIIAN HOME LANDS
STATE OF HAWAII

KAPAAKEA FLOOD MITIGATION IMPROVEMENTS
KAUNAKAKAI, MOLOKAI

TITLE SHEET

| MITSUNAGA & ASSOCIATES, INC. | | JOB NO. | DRAWING NO. |
|---|---|---|---|
| DESIGNED BY: SD | CHECKED BY: SD | P61001-13 | T-1 |
| DRAWN BY: DT | APPROVED BY: CM | DATE | SHEET 1 OF 8 SHTS |
| SCALE: AS INDICATED | | DECEMBER 2015 | |

FILE _____ DRAWER _____ FOLDER _____

## GENERAL NOTES

1. ALL CONSTRUCTION WORK SHALL BE DONE IN ACCORDANCE WITH THE "HAWAII STANDARD SPECIFICATIONS FOR ROAD AND BRIDGE CONSTRUCTION", 2005 AND "STANDARD DETAILS FOR PUBLIC WORKS CONSTRUCTION" DATED SEPTEMBER 1984 OF THE DEPARTMENT OF PUBLIC WORKS, COUNTY OF MAUI, AS AMENDED.
2. THE CONTRACTOR SHALL OBTAIN AND PAY FOR ALL PERMITS AND LICENSES REQUIRED. THE CONTRACTOR SHALL CONDUCT ALL TESTS AS REQUIRED BY THE ENGINEER AND BE RESPONSIBLE FOR ALL EXPENSES INCURRED IN CONDUCTING THESE TESTS.
3. THE CONTRACTOR SHALL NOTIFY THE DEPARTMENT OF PUBLIC WORKS AND ENVIRONMENTAL MANAGEMENT, COUNTY OF MAUI, ENGINEERING DIVISION SEVEN (7) DAYS PRIOR TO COMMENCEMENT OF CONSTRUCTION.
4. THE CONTRACTOR SHALL BE RESPONSIBLE FOR VERIFYING THE LOCATIONS AND INVERTS OF ALL EXISTING UTILITIES AND DRAINAGE SYSTEMS, WHETHER SHOWN ON THE PLANS OR NOT, PRIOR TO COMMENCEMENT OF CONSTRUCTION.
5. THE CONTRACTOR SHALL VERIFY AND CHECK ALL DIMENSIONS AND DETAILS SHOWN ON THE DRAWINGS PRIOR TO THE START OF CONSTRUCTION. THE CONTRACTOR SHALL IMMEDIATELY NOTIFY THE ENGINEER OF ANY DISCREPANCY OR CONFLICTS FOUND IN THE FIELD PRIOR TO OR DURING THE COURSE OF CONSTRUCTION AND SHALL NOT PROCEED WITH CONSTRUCTION UNTIL THE ENGINEER RESOLVES THE SAID DISCREPANCY OR CONFLICT.
6. FOR DETAILS NOT DELINEATED BY THESE PLANS, THE CONTRACTOR SHALL REFER TO THE "STANDARD DETAILS FOR PUBLIC WORKS CONSTRUCTION" MAUI, HAWAII AND KAUAI COUNTIES AND CITY AND COUNTY OF HONOLULU, OR THE "WATER SYSTEM STANDARDS", DATED 2002, WHICHEVER IS APPLICABLE.
7. UNLESS OTHERWISE NOTED, ALL EXISTING PAVEMENT, UTILITY LINES AND OTHER IMPROVEMENTS WITHIN THE COUNTY RIGHT-OF-WAY THAT ARE DAMAGED OR UNDERMINED AS A RESULT OF THE CONTRACTOR'S OPERATION SHALL BE RECONSTRUCTED OR REPLACED BY THE CONTRACTOR AT HIS OWN EXPENSE TO MATCH OR BETTER THAN EXISTING CONDITIONS.
8. ALL VISIBLE UTILITY STRUCTURES HAVE BEEN LOCATED IN THE FIELD. HOWEVER, CONNECTIONS TO UNDERGROUND UTILITY LINES AS SHOWN ARE UNVERIFIED AND COMPILED FROM EXISTING DATA. UNDERGROUND UTILITIES SHOWN HEREIN ARE FOR INFORMATION ONLY, HAVING BEEN OBTAINED FROM THE BEST AVAILABLE SOURCES. NO GUARANTEE IS MADE ON THE ACCURACY OR COMPLETENESS OF SAID INFORMATION. THE CONTRACTOR SHALL BE RESPONSIBLE FOR PAYMENT OF ANY DAMAGED UTILITIES.
9. PRIOR TO THE START OF CONSTRUCTION, THE CONTRACTOR SHALL TONE OR PROBE THE PROJECT SITE TO VERIFY THE LOCATION OF ALL UNDERGROUND UTILITIES AND PIPELINES WHETHER SHOWN OR NOT. IF UTILITIES OR PIPELINES ARE FOUND DURING PROBING AND ARE NOT SHOWN ON THE PLANS, THE ENGINEER SHALL BE NOTIFIED IMMEDIATELY.
10. THE CONTRACTOR SHALL OBSERVE AND COMPLY WITH ALL FEDERAL, STATE, AND LOCAL LAWS REQUIRED FOR THE PROTECTION OF PUBLIC HEATH, SAFETY, AND ENVIRONMENTAL QUALITY.
11. WHENEVER CONNECTIONS OF NEW UTILITIES TO EXISTING UTILITIES ARE SHOWN ON THE PLANS, THE CONTRACTOR SHALL EXPOSE THE EXISTING LINES AT THE PROPOSED CONNECTIONS TO VERIFY THEIR LOCATIONS, DEPTHS AND ASSURE CONNECTIONS CAN BE MADE PRIOR TO EXCAVATION FOR THE NEW LINES, AT NO ADDITIONAL COST TO THE STATE.
12. IN THE EVENT THAT SUBSURFACE CULTURAL REMAINS SUCH AS ARTIFACTS, BURIALS, OR DEPOSITS OF SHELLS OR CHARCOAL ARE ENCOUNTERED DURING EXCAVATION WORK, THE CONTRACTOR SHALL STOP WORK IN THE AREA OF THE FIND AND CONTACT THE DEPARTMENT OF LAND AND NATURAL RESOURCES, HISTORIC PRESERVATION DIVISION (808-692-8015) IMMEDIATELY.
13. TOPOGRAPHIC SURVEY PERFORMED BY ENGINEERING SURVEYORS HAWAII, INC., DATED OCTOBER 30, 2014.

## COMPACTION REQUIREMENTS

1. TESTING OF MATERIAL SHALL BE CONDUCTED BY AN APPROVED INDEPENDENT TESTING AGENCY IN ACCORDANCE WITH ASTM STANDARD METHODS OR AS SPECIFIED BY THE DEPARTMENT OF PUBLIC WORKS AND ENVIRONMENTAL MANAGEMENT, COUNTY OF MAUI, AS FOLLOWS:
   a. EMBANKMENT/SELECT BORROW AND SUBGRADE MATERIALS: ONE (1) COMPACTION TEST PER 600 SQUARE YARDS PER LIFT;
   b. AGGREGATE SUBBASE COURSE: ONE (1) COMPACTION TEST PER 400 SQUARE YARDS; ONE (1) GRADATION AND SAND EQUIVALENT TEST PER LIFT PER PROJECT;
   c. AGGREGATE BASE COURSE: ONE (1) COMPACTION TEST PER 300 SQUARE YARDS; ONE (1) GRADATION AND SAND EQUIVALENT TEST PER PROJECT;
   d. ASPHALT CONCRETE PAVEMENT OR ASPHALT TREATED BASE COURSE; THREE (3) A.C. CORES FOR THICKNESS AND DENSITY TEST PER PROJECT;
   e. TRENCH BACKFILL MATERIAL: ONE (1) TEST FOR EACH 300 LINEAL FEET OF TRENCH PER LIFT OF MATERIAL.
2. CONTRACTOR SHALL SUBMIT ALL TESTING REPORTS INCLUDING RESULTS TO THE ENGINEER FOR REVIEW AND APPROVAL PRIOR TO COUNTY'S ACCEPTANCE OF WORK.
3. THE CONTRACTOR SHALL BE REQUIRED TO NOTIFY THE ENGINEER OF ANY TESTING FAILURES AND CORRECT EACH FAILURE PRIOR TO PROCEEDING TO THE NEXT PHASE OF CONSTRUCTION.

## GRADING NOTES

1. ALL GRADING WORK SHALL CONFORM TO THE MAUI COUNTY CODE. SHOULD A GRADING PERMIT BE REQUIRED, NO WORK SHALL COMMENCE UNTIL THE DEPARTMENT OF PUBLIC WORKS AND ENVIRONMENTAL MANAGEMENT (DPW) APPROVES A GRADING PERMIT.
2. THE CONTRACTOR SHALL PROVIDE ADEQUATE MEASURES TO PREVENT FLOODING AND EROSION PROBLEMS TO ADJACENT PROPERTIES.
3. THE CONTRACTOR SHALL REMOVE ALL SILT AND DEBRIS DEPOSITED IN DRAINAGE FACILITIES, ROADWAYS AND OTHER AREAS RESULTING FROM HIS WORK. THE COSTS INCURRED FOR ANY NECESSARY REMEDIAL ACTION BY THE DPW SHALL BE PAYABLE BY THE CONTRACTOR.
4. THE CONTRACTOR, AT HIS OWN EXPENSE, SHALL KEEP THE PROJECT AND SURROUNDING AREAS FREE FROM DUST NUISANCES. THE WORK SHALL BE IN CONFORMANCE WITH THE AIR POLLUTION CONTROL RULES OF THE STATE DEPARTMENT OF HEALTH, HAR 11-60.1, FUGITIVE DUST.
5. ALL GRADING OPERATIONS SHALL BE PERFORMED IN CONFORMANCE WITH THE APPLICABLE PROVISIONS OF THE HAWAII ADMINISTRATIVE RULES, TITLE 11, CHAPTER 55, WATER POLLUTION CONTROL AND CHAPTER 54, WATER QUALITY STANDARDS.
6. ALL GRADING OPERATIONS SHALL BE PERFORMED IN CONFORMANCE WITH THE APPLICABLE PROVISIONS OF THE HAWAII ADMINISTRATIVE RULES, TITLE 11, CHAPTER 46, COMMUNITY NOISE CONTROL.
7. SHOULD ANY UNANTICIPATED ARCHAEOLOGICAL SITE(S) BE UNCOVERED BY THE GRADING ACTIVITY, ALL WORK SHALL CEASE IN THE IMMEDIATE AREA AND THE CONTRACTOR SHALL NOTIFY THE STATE HISTORIC PRESERVATION DIVISION AT 692-8015. NO WORK SHALL RESUME UNTIL THE CONTRACTOR OBTAINS CLEARANCE FROM THE HISTORIC PRESERVATION DIVISION.
8. THE CONTRACTOR SHALL SOD OR PLANT ALL SLOPES AND EXPOSED AREAS IMMEDIATELY AFTER THE GRADING WORK HAS BEEN COMPLETED.
9. FILLS ON SLOPES STEEPER THAN 5:1 SHALL BE KEYED.
10. THE CONTRACTOR SHALL INFORM THE DPW OF THE LOCATION OF THE DISPOSAL AND/OR BORROW SITE(S) REQUIRED FOR THIS PROJECT WHEN AN APPLICATION FOR A GRADING PERMIT IS MADE. THE DISPOSAL AND/OR BORROW SITES MUST ALSO FULFILL THE REQUIREMENTS OF THE GRADING ORDINANCE.
11. NO GRADING WORK SHALL BE DONE ON SATURDAYS, SUNDAYS, AND HOLIDAYS ANYTIME WITHOUT PRIOR APPROVAL FROM DPW. GRADING WORK ON NORMAL WORKING DAYS SHALL BE BETWEEN THE HOURS OF 8:00 AM TO 4:30 PM.
12. FILLS SHALL BE COMPACTED TO 90 PERCENT (90%) OF MAXIMUM DENSITY PER ASTM D-1557 TEST, UNLESS SPECIFIED OTHERWISE.
13. THE CONTRACTOR SHALL REMOVE ALL VEGETATION BEFORE PLACING FILLS ON NATURAL GROUND SURFACE.
14. THE CONTRACTOR IS RESPONSIBLE FOR THE PROPER HANDLING, STORAGE AND/OR DISPOSAL OF ALL WASTE GENERATED BY THIS CONSTRUCTION. THE CONTRACTOR SHALL SUBMIT A PLAN TO MAUI COUNTY DEPARTMENT OF PUBLIC WORKS AND ENVIRONMENTAL MANAGEMENT FOR COMPOSTING AND DISPOSAL OF CLEARED AND GRUBBED MATERIAL AND RECYCLING AND DISPOSAL OF CONSTRUCTION WASTE.

## PUBLIC HEALTH SAFETY AND CONVENIENCE NOTES

1. THE CONTRACTOR SHALL OBSERVE AND COMPLY WITH ALL FEDERAL, STATE AND LOCAL LAWS REQUIRED FOR THE PROTECTION OF PUBLIC HEALTH, SAFETY AND ENVIRONMENTAL QUALITY.
2. THE CONTRACTOR, AT HIS OWN EXPENSE, SHALL KEEP THE PROJECT AND ITS SURROUNDING AREAS FREE FROM DUST NUISANCE. THE WORK SHALL BE IN CONFORMANCE WITH THE AIR POLLUTION STANDARDS AND REGULATIONS OF THE STATE DEPARTMENT OF HEALTH, THE COUNTY MAY REQUIRE SUPPLEMENTARY MEASURES AS NECESSARY.
3. NO CONTRACTOR SHALL PERFORM ANY TRENCHING OPERATION SO AS TO CAUSE FALLING ROCKS, SOIL OR DEBRIS IN ANY FORM TO FALL, SLIDE OR FLOW ONTO ADJOINING PROPERTIES, STREETS OR NATURAL WATER COURSES. SHOULD SUCH VIOLATIONS OCCUR, THE COSTS INCURRED FOR ANY REMEDIAL ACTION BY THE ENGINEER SHALL BE PAYABLE BY THE CONTRACTOR.
4. WHERE PEDESTRIAN WALKWAYS EXIST, THEY SHALL BE MAINTAINED IN PASSABLE CONDITION OR OTHER FACILITIES FOR PEDESTRIANS SHALL BE PROVIDED. TEMPORARY PASSAGE WAYS SHALL BE ACCESSIBLE AND COMPLY WITH THE GUIDELINES BELOW;
   A. ADAAG 201.3 TEMPORARY AND PERMANENT STRUCTURES. THESE REQUIREMENTS SHALL APPLY TO TEMPORARY AND PERMANENT BUILDINGS AND FACILITIES
   B. ADAAG 206.1 GENERAL. ACCESSIBLE ROUTES SHALL BE PROVIDED IN ACCORDANCE WITH 206 AND SHALL COMPLY WITH CHAPTER 4.

## ENVIRONMENTAL PROTECTION NOTES

1. IN ACCORDANCE WITH CHAPTER 11-60.1, AIR POLLUTION CONTROL, TITLE 11, STATE ADMINISTRATIVE RULES, THE PROPERTY OWNER/DEVELOPER SHALL BE RESPONSIBLE FOR ENSURING THAT EFFECTIVE CONTROL MEASURES ARE PROVIDED TO MINIMIZE OR PREVENT ANY VISIBLE DUST EMISSION CAUSED BY THE CONSTRUCTION WORK FROM IMPACTING THE SURROUNDING AREAS INCLUDING THE OFF-SITE ROADWAYS USED TO ENTER/EXIT THE PROJECT. THESE MEASURES INCLUDE BUT ARE NOT LIMITED TO THE USE OF WATER WAGON, SPRINKLER SYSTEMS, DUST FENCES, ETC.
2. IN ACCORDANCE WITH CHAPTER 11-55, WATER POLLUTION CONTROL AND CHAPTER 11-54, WATER QUALITY STANDARDS, TITLE 11 , STATE ADMINISTRATIVE RULES, THE PROPERTY OWNER/DEVELOPER SHALL BE RESPONSIBLE FOR ENSURING THAT THE BEST MANAGEMENT PRACTICE (BMP) TO MINIMIZE OR PREVENT THE DISCHARGE OF SEDIMENTS, DEBRIS, AND OTHER WATER POLLUTANTS INTO STATE WATERS IS PROVIDED.
3. IN ACCORDANCE WITH CHAPTER 11-58.1, SOLID WASTE MANAGEMENT CONTROL, TITLE 11 , STATE ADMINISTRATIVE RULES, THE PROPERTY OWNER/DEVELOPER SHALL BE RESPONSIBLE FOR ENSURING THAT GRUB MATERIAL, DEMOLITION WASTE AND CONSTRUCTION WASTE GENERATED BY THE PROJECT ARE DISPOSED OF IN A MANNER OR AT A SITE APPROVED BY THE STATE DEPARTMENT OF HEALTH. DISPOSAL OF ANY OF THESE WASTES BY BURNING IS PROHIBITED.

## ARCHAEOLOGICAL NOTE

1. IF, DURING CONSTRUCTION, ANY ARCHAEOLOGICAL SITES OR REMAINS (SUCH AS ARTIFACTS, SHELL, BONE, OR CHARCOAL DEPOSITS, HUMAN BURIALS, ROCK OR CORAL ALIGNMENTS, PAVINGS, OR WALLS) ARE ENCOUNTERED, THE CONTRACTOR SHALL STOP WORK AND CONTACT THE STATE HISTORIC PRESERVATION DIVISION AT 692-8015. WORK IN THE IMMEDIATE AREA SHALL BE STOPPED UNTIL THE OWNER IS ABLE TO ASSESS THE IMPACT AND MAKE RECOMMENDATIONS FOR MITIGATE ACTIVITY.

## ABBREVIATIONS:

| | |
|---|---|
| & | AND |
| AC | ACRES |
| APPROX | APPROXIMATE, APPROXIMATELY |
| @ | AT |
| BW | BOTTOM OF WALL |
| BF | BOTTOM OF FOOTING |
| CB | CATCH BASIN |
| CONN | CONNECT, CONNECTION |
| ℄ | CENTERLINE |
| CONC | CONCRETE |
| CONT | CONTINUE, CONTINUOUS |
| CY | CUBIC YARD |
| D | DIAMETER |
| DET | DETAIL |
| DPP | DEPARTMENT OF PLANNING & PERMITTING |
| DPW | DEPARTMENT OF PUBLIC WORKS |
| DWG | DRAWING |
| E | EAST |
| EA | EACH |
| ELEC | ELECTRIC, ELECTRICAL |
| EP | EDGE OF PAVEMENT |
| ELEV, EL | ELEVATION |
| EXIST | EXISTING |
| FT | FOOT, FEET |
| FH | FIRE HYDRANT |
| FG | FINISH GRADE |
| H | HEIGHT |
| HORIZ | HORIZONTAL |
| ID | INSIDE DIAMETER |
| INV | INVERT |
| LAT | LATERAL |
| LF | LINEAR FOOT |
| LIN | LINEAR |
| MAX | MAXIMUM |
| MECH | MECHANICAL |
| MH | MANHOLE |
| MISC | MISCELLANEOUS |
| MIN | MINIMUM |
| MON | MONUMENT |
| N | NORTH |
| NTS | NOT TO SCALE |
| NO | NUMBER |
| OC | ON CENTER |
| OD | OUTSIDE DIAMETER |
| O/S | OFFSET |
| ℙ | PROPERTY LINE |
| PVC | POLYVINYL CHLORIDE |
| PP | POWER POLE |
| PSI | POUNDS PER SQUARE INCH |
| POC | POINT ON CURVE |
| PORT | PORTABLE BUILDING |
| R | RADIUS |
| S | SOUTH, SLOPE, SEWER, SPAN |
| SF | SQUARE FOOT |
| SHT | SHEET |
| SIGMH | SIGNAL MANHOLE |
| SL | SEWER LINE |
| S/N | SERIAL NUMBER |
| SMH | SEWER MANHOLE |
| SQ | SQUARE |
| ST | STREET |
| STA | STATION |
| STD | STANDARD |
| SY | SQUARE YARD |
| T | TOP |
| TB | TOP OF BANK |
| TF | TOP OF FOOTING |
| TW | TOP OF WALL |
| TYP | TYPICAL |
| UP | UTILITY POLE |
| VB | VALVE BOX |
| VERT | VERTICAL |
| W | WATER |
| W/ | WITH |
| WL | WATERLINE |
| WMH | WATER MANHOLE |
| WM | WATER METER |
| WV | WATER VALVE |
| WVHH | WATER VALVE HAND HOLE |
| W | WEST |

## INDEX TO DRAWINGS


| SHEET | DWG. NO. | DESCRIPTION |
|---|---|---|
| 1 | T-1 | TITLE SHEET |
| 2 | C-1 | SHEET INDEX AND CONSTRUCTION NOTES |
| 3 | C-2 | EXISTING CONDITIONS |
| 4 | C-3 | DEMOLITION & EROSION CONTROL PLAN |
| 5 | C-4 | SITE & GRADING PLAN & PROFILE 1 |
| 6 | C-5 | SITE & GRADING PLAN & PROFILE 2 |
| 7 | C-6 | SECTIONS |
| 8 | C-7 | DETAILS |


| REVISION NO. | SYM. | DESCRIPTION | SHT ___ OF ___ | DATE |
|---|---|---|---|---|
| | | | | |

CHAD M. MCDONALD — LICENSED PROFESSIONAL ENGINEER — No. 9793-C — HAWAII, U.S.A.

This work was prepared by me or under my supervision

4/30/2016
MITSUNAGA & ASSOCIATES, INC. EXP. DATE:

NOTE: Contractor to check and verify dimensions at job before proceeding with work.

DEPARTMENT OF HAWAIIAN HOME LANDS
STATE OF HAWAII

KAPAAKEA FLOOD MITIGATION IMPROVEMENTS
KAUNAKAKAI, MOLOKAI

SHEET INDEX AND CONSTRUCTION NOTES

| | | | |
|---|---|---|---|
| MITSUNAGA & ASSOCIATES, INC. | | JOB NO. | DRAWING NO. |
| DESIGNED BY: SD | CHECKED BY: SD | P61001-13 | C-1 |
| DRAWN BY: DT | APPROVED BY: CM | DATE: DECEMBER 2015 | SHEET 2 OF 8 SHTS |
| SCALE: AS INDICATED | | | |

FILE _____ DRAWER _____ FOLDER _____

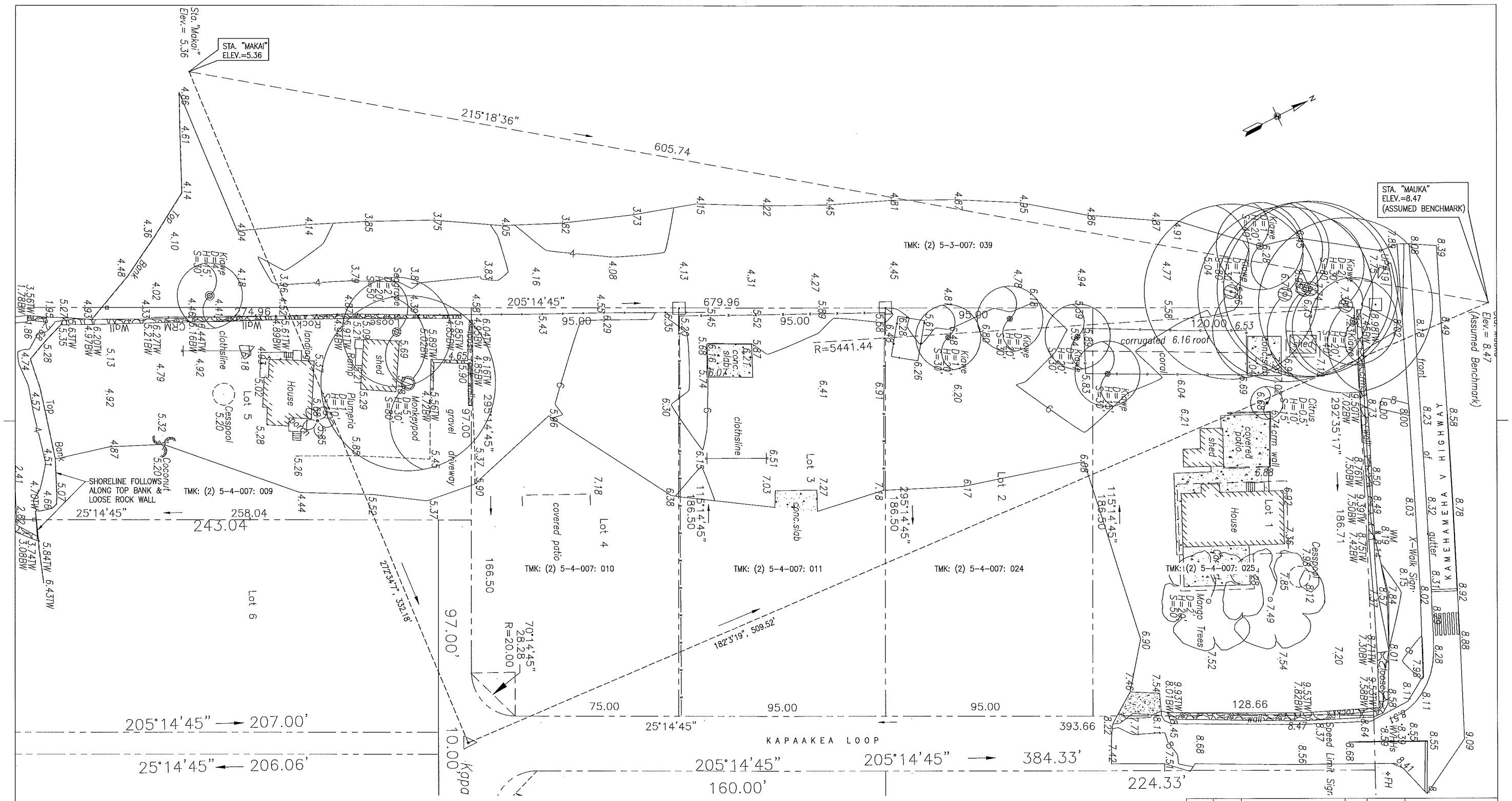


## EXISTING CONDITIONS

SCALE: 1" = 20'

GRAPHIC SCALE:

1" = 20'

20' 10' 0 20' 40'

| REVISION NO. | SYM. | DESCRIPTION | SHT OF | DATE |
|---|---|---|---|---|
| | | | | |

CHAD M MCDONALD
LICENSED PROFESSIONAL ENGINEER
No. 9793-C
HAWAII, U.S.A.

This work was prepared by me or under my supervision

4/30/2015
MITSUNAGA & ASSOCIATES, INC. EXP. DATE

NOTE: Contractor to check and verify dimensions at job before proceeding with work.

DEPARTMENT OF HAWAIIAN HOME LANDS
STATE OF HAWAII

KAPAAKEA FLOOD MITIGATION IMPROVEMENTS
KAUNAKAKAI, MOLOKAI

EXISTING CONDITIONS

| MITSUNAGA & ASSOCIATES, INC. | | JOB NO. | DRAWING NO. |
|---|---|---|---|
| DESIGNED BY: SD | CHECKED BY: SD | P61001-13 | C-2 |
| DRAWN BY: DT | APPROVED BY: CM | DATE | SHEET 3 |
| SCALE: AS INDICATED | | DECEMBER 2015 | OF 8 SHTS |

FILE _____ DRAWER _____ FOLDER _____

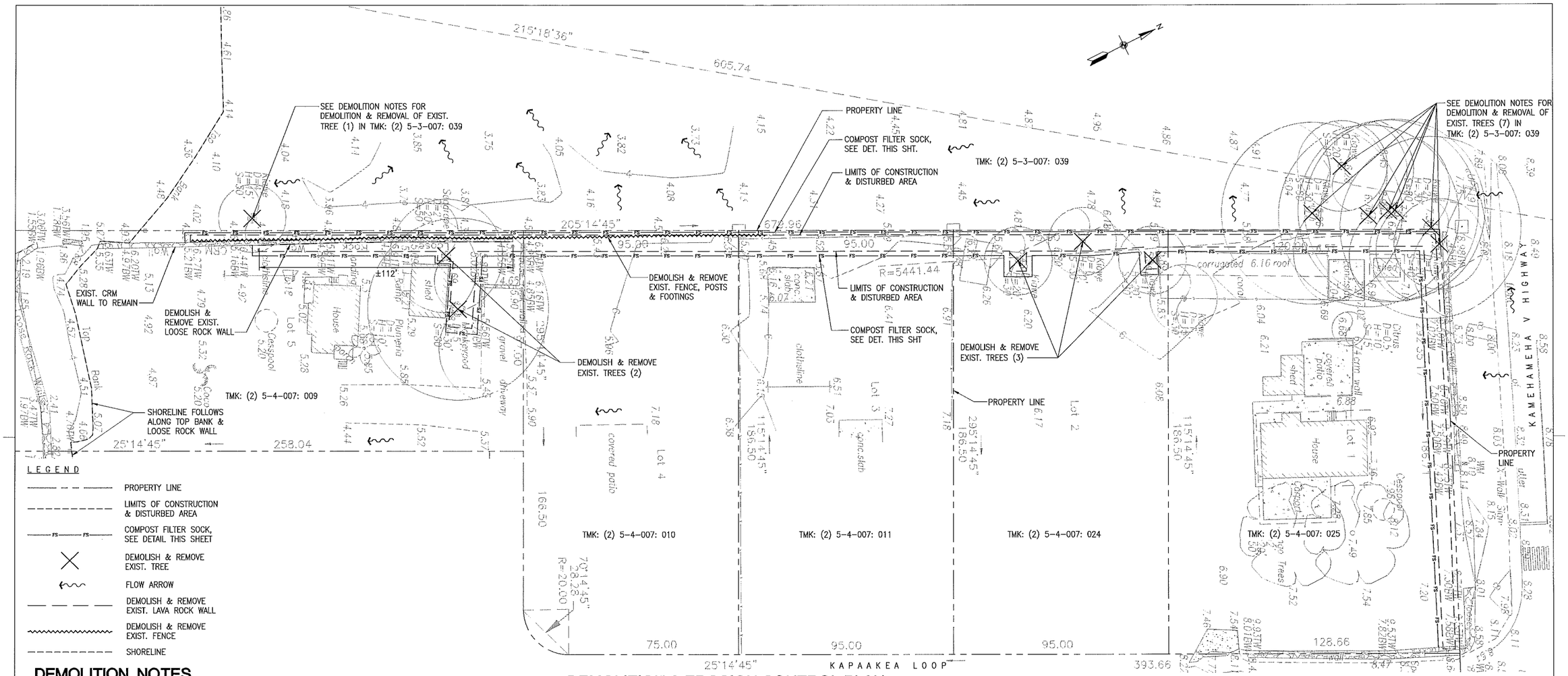


LEGEND

- PROPERTY LINE
- LIMITS OF CONSTRUCTION & DISTURBED AREA
- FS — FS — COMPOST FILTER SOCK, SEE DETAIL THIS SHEET
- DEMOLISH & REMOVE EXIST. TREE
- FLOW ARROW
- DEMOLISH & REMOVE EXIST. LAVA ROCK WALL
- DEMOLISH & REMOVE EXIST. FENCE
- SHORELINE

## DEMOLITION NOTES

1. TREES TO BE DEMOLISHED & REMOVED WITHIN TMK: (2) 5-3-007: 039 SHALL BE COORDINATED WITH THE PROPERTY CARETAKER AT 808-553-5992.
2. ALL TREES WITHIN TMK: (2) 5-3-007: 039 SHALL BE CUT AT THE BASE AND TREATED WITH GARLON 4 HERBICIDE OR APPROVED EQUAL.
3. CONTRACTOR SHALL REMOVE AND PROPERLY DISPOSE OF ALL WOODY DEBRIS AND RUBBISH OFF-SITE.

## EROSION CONTROL NOTES

TEMPORARY EROSION CONTROL NOTES:

1. FOLLOW SEQUENCE OF OPERATION AS RECOMMENDED ON PAGES 23 AND 24 OF THE "RULES RELATING TO SOIL EROSION STANDARDS AND GUIDELINES", APRIL 1999, OF THE DEPARTMENT OF PLANNING AND PERMITTING, MAUI COUNTY.
2. THE CONTRACTOR SHALL MINIMIZE THE AMOUNT OF LAND TO BE EXPOSED AT ANY TIME.
3. EXPOSED AREAS THAT ARE NOT AT FINAL GRADE AND ARE EXPECTED TO BE EXPOSED FOR MORE THAN 30 DAYS SHALL BE PLACED WITH A VEGETATIVE COVER OR BE MULCHED (AT A RATE OF 45 CUBIC FEET PER 1,000 SQUARE FEET) IN ORDER TO PREVENT EROSION AND SILT RUNOFF.
4. TEMPORARY EROSION CONTROLS SHALL NOT BE REMOVED BEFORE PERMANENT EROSION CONTROLS ARE IN PLACE AND ESTABLISHED.

PERMANENT EROSION CONTROL MEASURES:

1. ALL SLOPES AND EXPOSED AREAS SHALL BE SODDED OR PLANTED AS SOON AS FINAL GRADES HAVE BEEN ESTABLISHED.
2. 2:1 SLOPES SHALL BE TREATED WITH GEOFABRIC OR TREATED WITH SOIL CONDITIONER TO AID IN THE ESTABLISHMENT OF TURF/ PLANTING.

## BMP NOTES:

TEMPORARY EROSION CONTROL MEASURES:

1. PRIOR TO CLEARING LAND FOR GRADING, TEMPORARY EROSION CONTROL MEASURES, SUCH AS COMPOST FILTER SOCK SHALL BE INSTALLED.
2. OPENING AND CLEARING OF LAND FOR GRADING SHALL BE PERFORMED INCREMENTALLY TO MINIMIZE EROSION POTENTIAL.
3. AREAS NOT WITHIN THE LIMITS OF CONSTRUCTION & DISTURBED AREA SHALL REMAIN VEGETATED DURING GRADING OPERATIONS.
4. SILT WHICH HAS ACCUMULATED ON COMPOST FILTER SOCK SHALL BE REMOVED AND DISPOSED OF ON A BI-WEEKLY BASIS.
5. WHEN CLEARED OR GRUBBED AREAS ARE NOT TO BE GRADED OR DISTURBED FOR 30 DAYS OR MORE, SEED, PLANT OR HYDROSEED TEMPORARY VEGETATION.
6. THE CONTRACTOR'S EQUIPMENT STORAGE AREAS SHALL BE PROTECTED THROUGH THE USE OF EARTH BERMS AND/OR ABSORPTION MATERIALS TO PREVENT POLLUTANTS FROM DISCHARGING INTO STATE WATERS. THE CONTRACTOR SHALL NSPECT AND MAINTAIN STORAGE AREAS.

SEQUENCE FOR SEDIMENT CONTROL:

1. INSTALL COMPOST FILTER SOCK.
2. GROUND COVER, SUCH AS GRASSING, MULCHING OR NETTING TO BE INSTALLED IMMEDIATELY AFTER FINAL GRADES ARE ESTABLISHED.

## DEMOLITION & EROSION CONTROL PLAN

SCALE: 1" = 20'

NOTE:
1. COMPOST SHALL NOT CONTAIN BIOSOLIDS AND SHOULD BE CONSISTENT WITH EPA GUIDELINES.
2. COMPOST FILTER SOCK SHALL BE 12" MIN. IN DIAMETER.
3. NO REBAR OR OTHER METAL RODS ARE TO BE USED AS ANCHORS.
4. ANCHORS SHALL HAVE A 4' MAX SPACING.

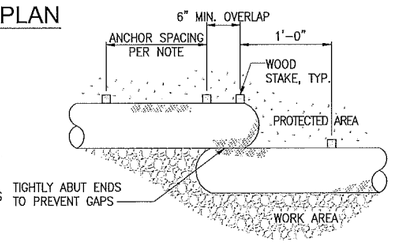


PLAN

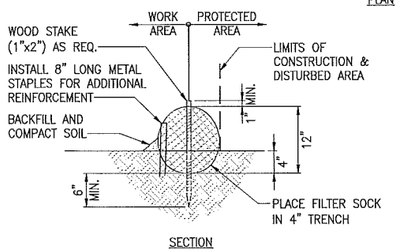


SECTION

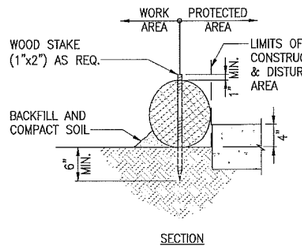


SECTION

**01 COMPOST FILTER SOCK**
NOT TO SCALE

GRAPHIC SCALE:

1" = 20'  20' 10' 0 20' 40'

| REVISION NO. | SYM. | DESCRIPTION | SHT OF | DATE |
|---|---|---|---|---|
| | | | | |

CHAD M. MCDONALD — LICENSED PROFESSIONAL ENGINEER — No. 9793-C — HAWAII, U.S.A.

This work was prepared by me or under my supervision

4/30/2016
MITSUNAGA & ASSOCIATES, INC. EXP. DATE

NOTE: Contractor to check and verify dimensions at job before proceeding with work.

DEPARTMENT OF HAWAIIAN HOME LANDS
STATE OF HAWAII

KAPAAKEA FLOOD MITIGATION IMPROVEMENTS
KAUNAKAKAI, MOLOKAI

DEMOLITION & EROSION CONTROL PLAN

MITSUNAGA & ASSOCIATES, INC.

| DESIGNED BY: | CHECKED BY: | JOB NO. | DRAWING NO. |
|---|---|---|---|
| SD | SD | P61001-13 | C-3 |
| DRAWN BY: | APPROVED BY: | DATE | SHEET |
| DT | CM | DECEMBER 2015 | 4 OF 8 SHTS |
| SCALE: AS INDICATED | | | |

FILE _____ DRAWER _____ FOLDER _____

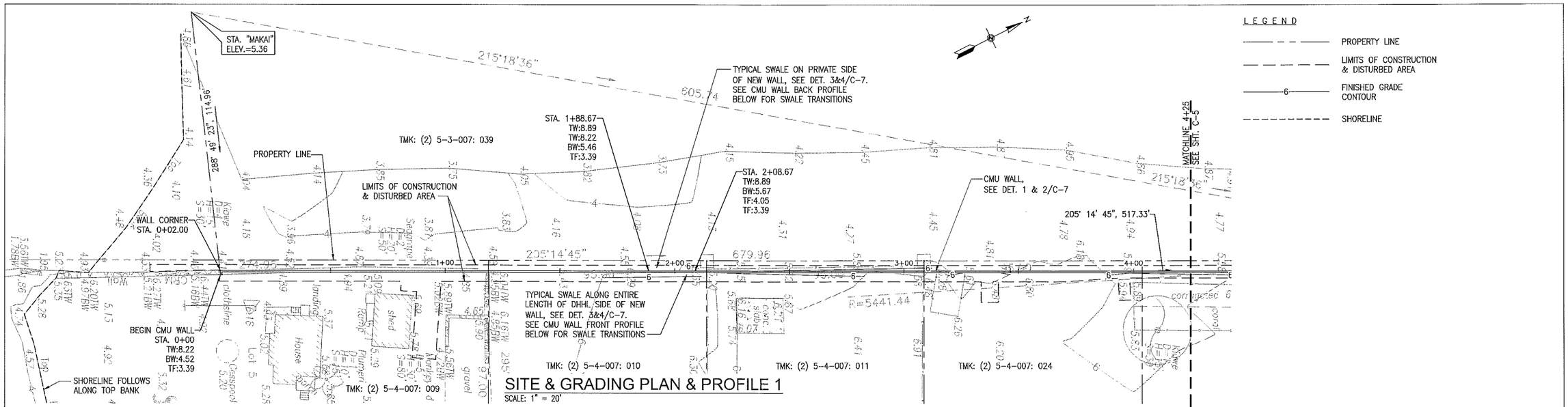


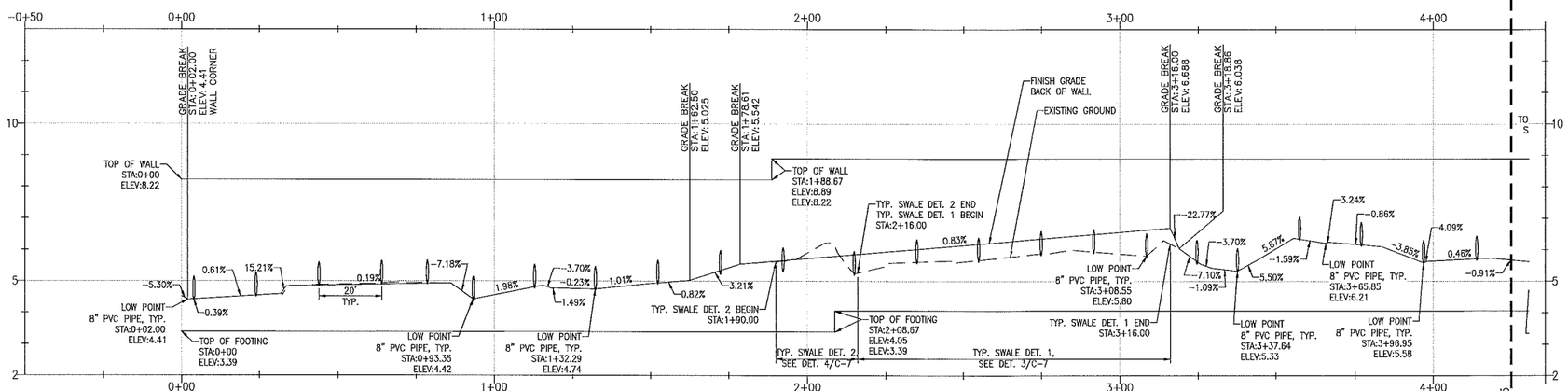


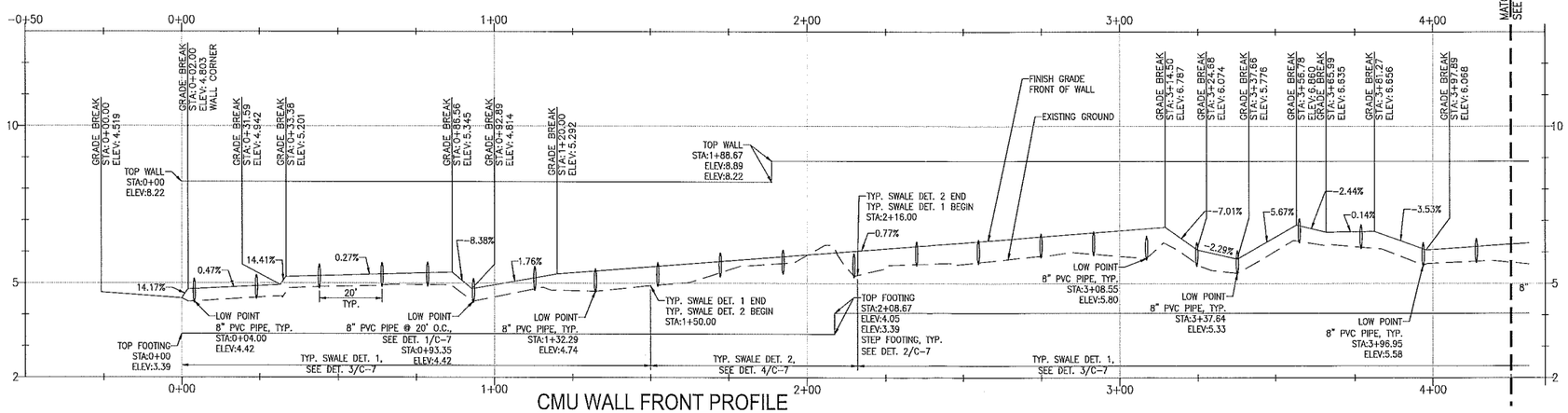


## EARTHWORK QUANTITIES:

(FOR GRADING PERMIT PURPOSES ONLY)

| | |
|---|---|
| GRADED AREA | 0.20 ACRES |
| EXCAVATION | 100 CY |
| EMBANKMENT | 10 CY |
| DISTURBED AREA | 0.33 ACRES |

GRAPHIC SCALE:

1" = 20' (20' 10' 0 20' 40')

1" = 5' (5' 0 5' 10')

| REVISION NO. | SYM. | DESCRIPTION | SHT OF | DATE |
|---|---|---|---|---|
| | | | | |

CHAD M. MCDONALD LICENSED PROFESSIONAL ENGINEER No. 9793-C HAWAII, U.S.A.

This work was prepared by me or under my supervision

4/30/2016 EXP. DATE

MITSUNAGA & ASSOCIATES, INC.

NOTE: Contractor to check and verify dimensions at job before proceeding with work.

DEPARTMENT OF HAWAIIAN HOME LANDS
STATE OF HAWAII

KAPAAKEA FLOOD MITIGATION IMPROVEMENTS
KAUNAKAKAI, MOLOKAI

SITE & GRADING PLAN & PROFILE 1

MITSUNAGA & ASSOCIATES, INC.

| | | | |
|---|---|---|---|
| DESIGNED BY: SD | CHECKED BY: SD | JOB NO. P51001-13 | DRAWING NO. C-4 |
| DRAWN BY: DT | APPROVED BY: CM | DATE: DECEMBER 2015 | SHEET 5 OF 8 SHTS |
| SCALE: AS INDICATED | | | |

FILE _____ DRAWER _____ FOLDER _____

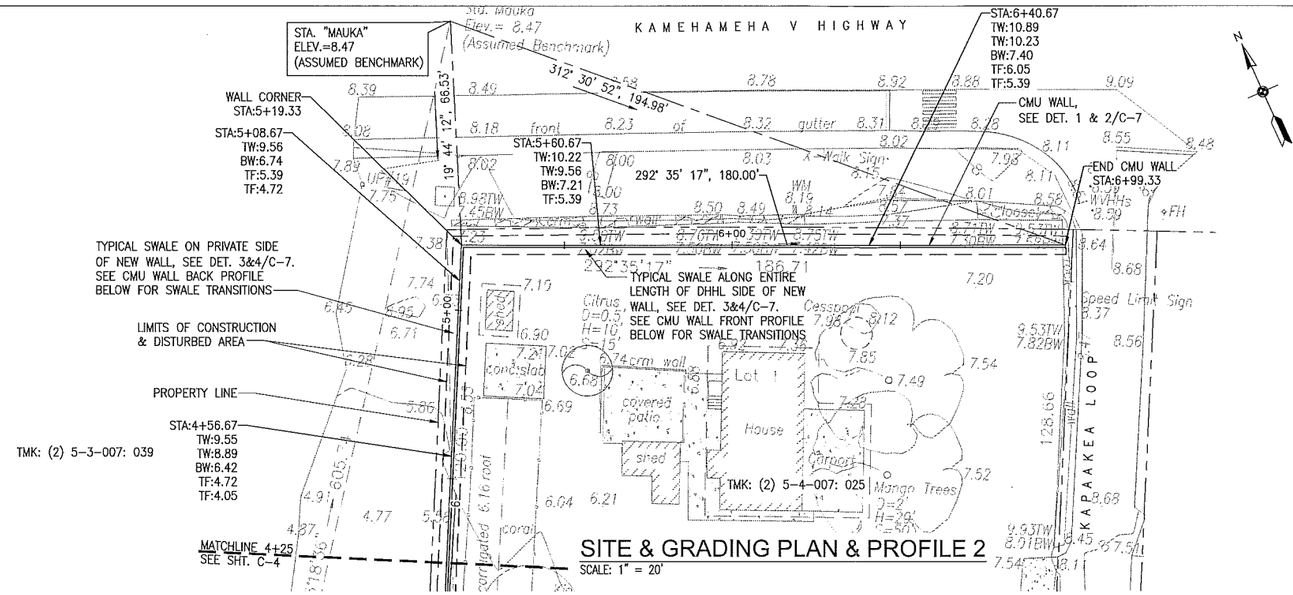


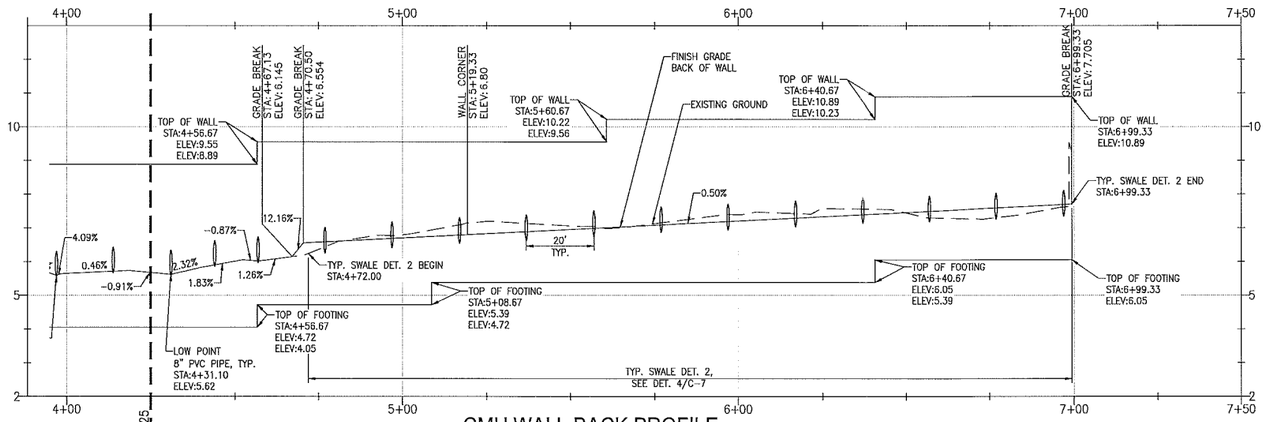


LEGEND

- PROPERTY LINE
- LIMITS OF CONSTRUCTION & DISTURBED AREA
- 2 FINISHED GRADE CONTOUR

GRAPHIC SCALE:

1" = 20' — 20' 10' 0 20' 40'

1" = 5' — 5' 0 5' 10'

| REVISION NO. | STM. | DESCRIPTION | SHT ___ OF ___ | DATE |
|---|---|---|---|---|
| | | | | |

CHAD M. MCDONALD — LICENSED PROFESSIONAL ENGINEER — No. 9793-C — HAWAII, U.S.A.

This work was prepared by me or under my supervision

4/30/2016 EXP. DATE

MITSUNAGA & ASSOCIATES, INC.

NOTE: Contractor to check and verify dimensions at job before proceeding with work.

DEPARTMENT OF HAWAIIAN HOME LANDS
STATE OF HAWAII

KAPAAKEA FLOOD MITIGATION IMPROVEMENTS
KAUNAKAKAI, MOLOKAI

SITE & GRADING PLAN & PROFILE 2

| MITSUNAGA & ASSOCIATES, INC. | | JOB NO. | DRAWING NO. |
|---|---|---|---|
| DESIGNED BY: SD | CHECKED BY: SD | P61001-13 | C-5 |
| DRAWN BY: DT | APPROVED BY: CM | DATE | SHEET |
| SCALE: AS INDICATED | | DECEMBER 2015 | 6 OF 8 SHTS |

FILE _____ DRAWER _____ FOLDER _____

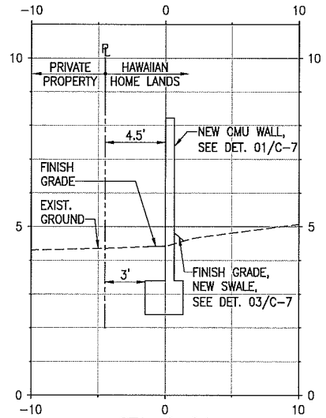

STA. 0+04

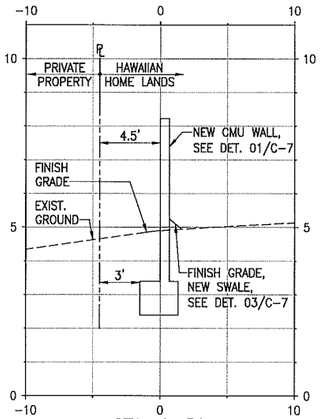

STA. 0+50

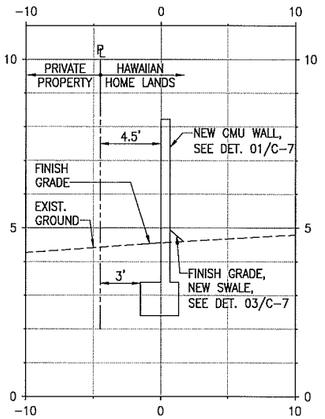

STA. 1+00

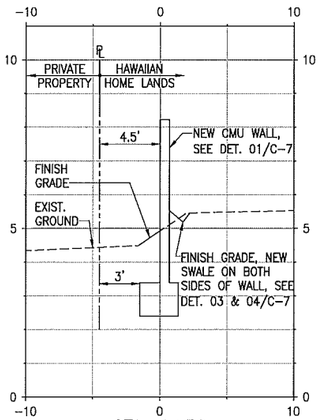

STA. 1+50

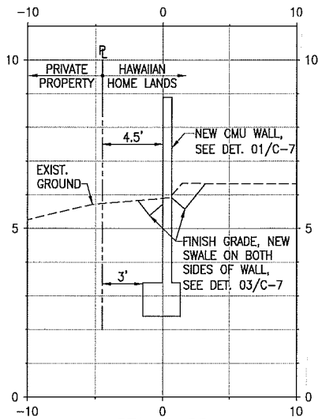

STA. 2+00

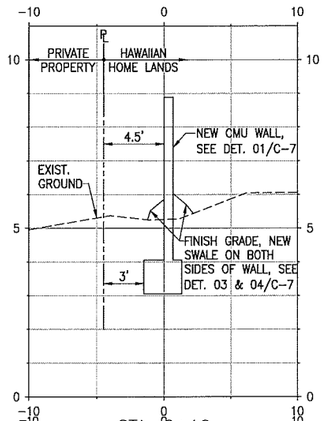

STA. 2+16

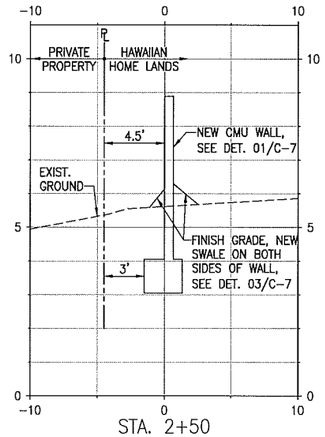

STA. 2+50

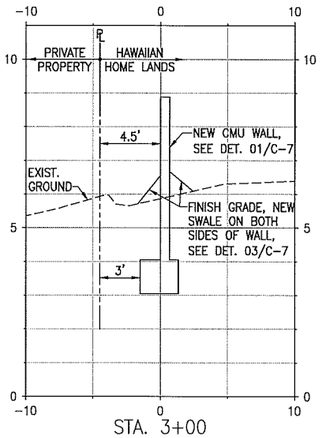

STA. 3+00

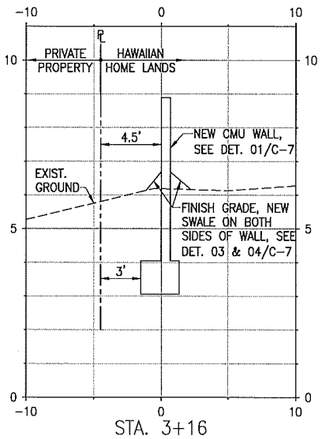

STA. 3+16

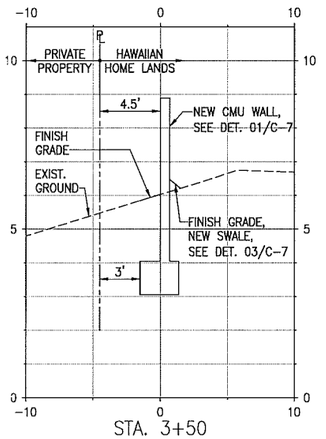

STA. 3+50

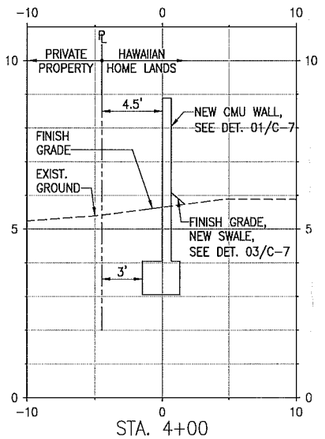

STA. 4+00

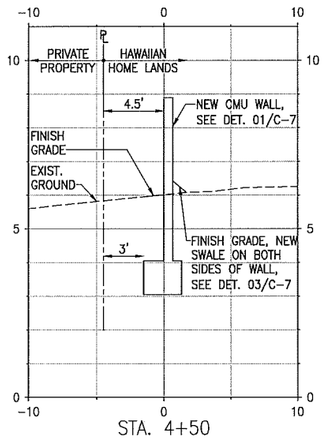

STA. 4+50

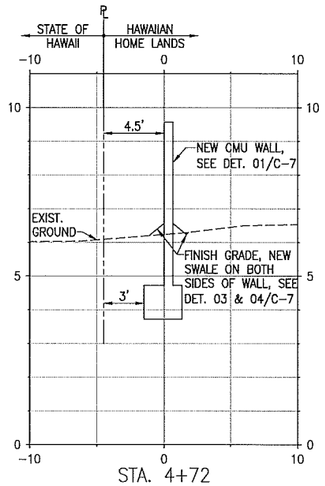

STA. 4+72

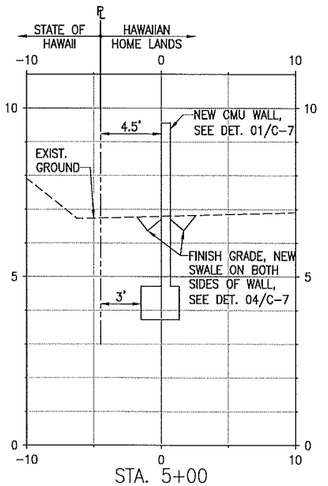

STA. 5+00

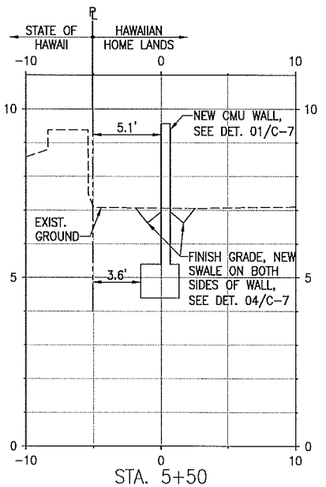

STA. 5+50

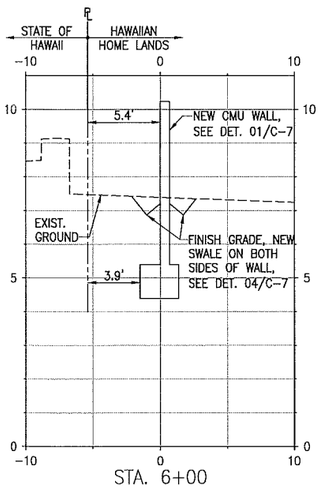

STA. 6+00

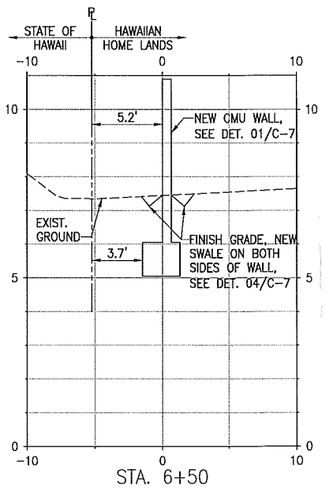

STA. 6+50

GRAPHIC SCALE:

VERT: 1" = 2'




HORIZ: 1" = 5'




| REVISION NO. | SYM. | DESCRIPTION | SHT OF | DATE |
|---|---|---|---|---|
| | | | | |

CHAD M. MCDONALD
LICENSED PROFESSIONAL ENGINEER
No. 9793-C
HAWAII, U.S.A.

This work was prepared by me or under my supervision

4/30/2016
MITSUNAGA & ASSOCIATES, INC. EXP. DATE

NOTE: Contractor to check and verify dimensions at job before proceeding with work.

DEPARTMENT OF HAWAIIAN HOME LANDS
STATE OF HAWAII

KAPAAKEA FLOOD MITIGATION IMPROVEMENTS
KAUNAKAKAI, MOLOKAI

SECTIONS

MITSUNAGA & ASSOCIATES, INC.

| DESIGNED BY: SD | CHECKED BY: SD | JOB NO. P61001-13 | DRAWING NO. C-6 |
|---|---|---|---|
| DRAWN BY: DT | APPROVED BY: CM | DATE DECEMBER 2015 | SHEET 7 OF 8 SHTS |
| SCALE: AS INDICATED | | | |

FILE _____ DRAWER _____ FOLDER _____

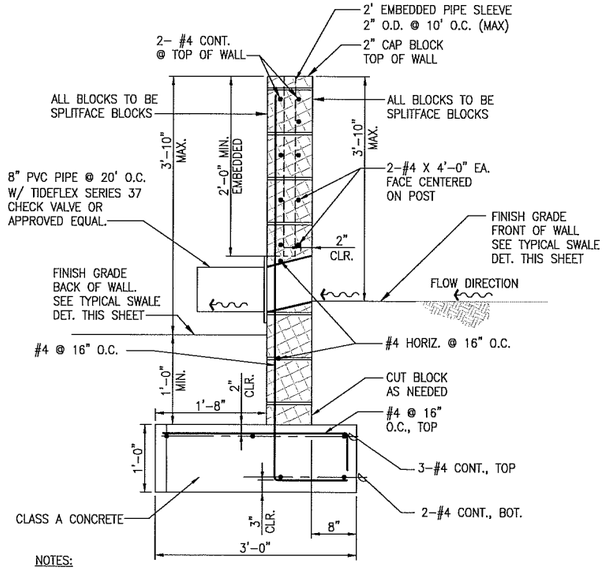


NOTES:

1. CUT MASONRY BLOCKS AT THE BOTTOM OF THE WALL TO ALIGN MORTAR JOINTS AT STEP FOOTINGS.
2. GROUT ALL MASONRY CELLS SOLID.
3. ALL BLOCKS TO BE SPLITFACE BLOCKS.

## 1 C-7 CMU WALL
SCALE: 1" = 1'-0"

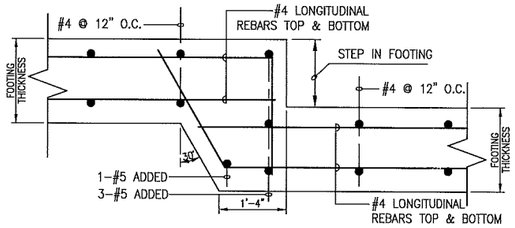


## 2 C-7 STEP FOOTING DETAIL
SCALE: 3/4" = 1'-0"

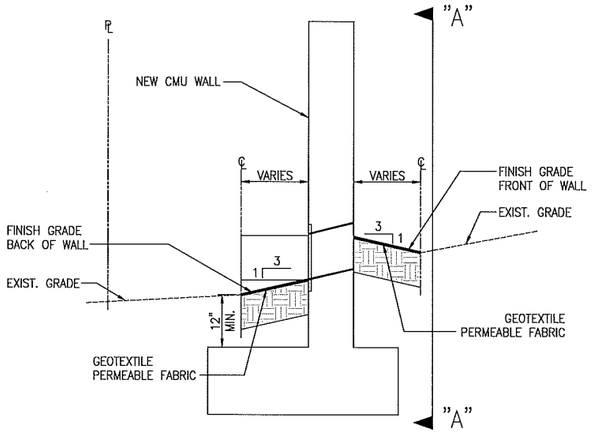


## 3 C-7 TYPICAL SWALE DETAIL LOCATIONS VARY, SEE C-4 & C-5
SCALE: 1" = 1'-0"

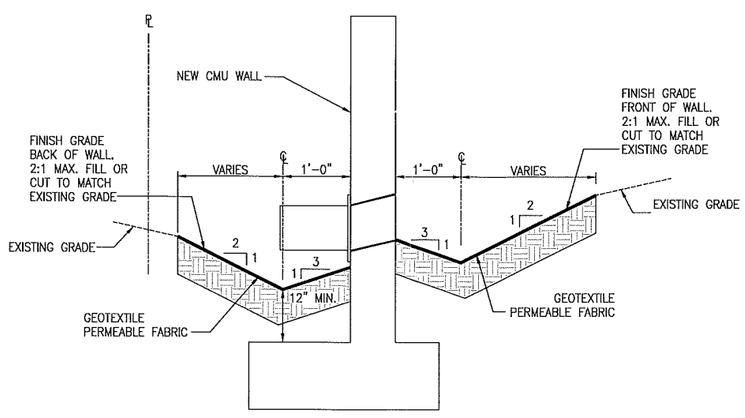


## 4 C-7 TYPICAL SWALE DETAIL LOCATIONS VARY, SEE C-4 & C-5
SCALE: 1" = 1'-0"

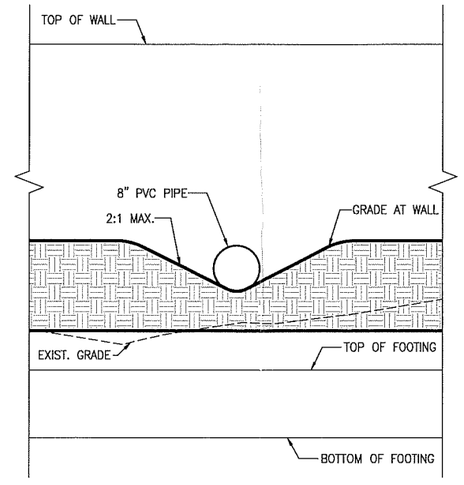


## 5 C-7 SECTION "A"-"A"
SCALE: 1" = 1'-0"

GRAPHIC SCALE:

1" = 1'-0" (0, 1', 2')

3/4" = 1'-0" (0, 1', 2', 3')

| REVISION NO. | SYM. | DESCRIPTION | SHT ___ OF ___ | DATE |
|---|---|---|---|---|
| | | | | |

CHAD M. MCDONALD
LICENSED PROFESSIONAL ENGINEER
No. 9703-C
HAWAII, U.S.A.

This work was prepared by me or under my supervision

4/30/2015
MITSUNAGA & ASSOCIATES, INC. EXP. DATE

NOTE: Contractor to check and verify dimensions at job before proceeding with work.

DEPARTMENT OF HAWAIIAN HOME LANDS
STATE OF HAWAII

KAPAAKEA FLOOD MITIGATION IMPROVEMENTS
KAUNAKAKAI, MOLOKAI

DETAILS

| MITSUNAGA & ASSOCIATES, INC. | | JOB NO. | DRAWING NO. |
|---|---|---|---|
| DESIGNED BY: SD | CHECKED BY: SD | P61001-13 | C-7 |
| DRAWN BY: DT | APPROVED BY: CM | DATE | SHEET 8 |
| SCALE: AS INDICATED | | DECEMBER 2015 | OF 8 SHTS |

FILE _____ DRAWER _____ FOLDER _____

MAY 18 2016

**Subject:** FW: Kapaakea Flood Mitigation Project

**From:** Stuart Goldberg - NOAA Affiliate [mailto:stuart.goldberg@noaa.gov]
**Sent:** Monday, May 16, 2016 11:10 AM
**To:** Gwendolyn Rivera
**Subject:** Kapaakea Flood Mitigation Project

Hi Gwendolyn,

I am a contractor for NOAA Fisheries in the Habitat Conservation Division responsible for Essential Fish Habitat (EFH) consultations pursuant to the Magnuson Stevens Fisheries Act. I talked to you briefly the other day about some questions on this project, and am just following up.

EFH consists of the entire water column and substrate in the ocean adjacent to the proposed project, and includes habitat for the following management unit species: coral reef ecosystem, pelagics, bottomfish and crustaceans. In general, our concern for this type of project would likely be that there may be adverse effects on EFH due to sedimentation and increased turbidity due to project activities or if the project directly diverts runoff of sediments into the ocean regularly. I have the following questions and comments about the proposed project:

1. It appears from the letter that the wall is just running North/South and will not be in contact with the ocean (e.g. ~100ft away). Can you verify that? Is there an East/West barrier, too?
2. From Google Earth the neighboring property is exposed and barren. Can any "soft" or revegetative approaches be considered to help reduce runoff of sediments and flooding of this and the adjacent property? This approach would also reduce the general runoff of sediments into the ocean in an area where reefs are stressed due to sediment and turbidity increases.
3. Please take proper considerations to ensure/minimize any potential long-term effects that a new wall structure may have on directly diverting storm waters directly into the ocean.
4. Please ensure that precautions are taken to minimize erosion of sediments into runoff and stormwater drains that lead to ocean (e.g. employ berms, silt fences and other mechanisms) during project activities.
5. Please ensure that measures are taken to eliminate pollution from any pouring of cement/concrete and use of paints and chemicals are developed and enacted.

Thanks so much for the opportunity to provide early comments and ask questions. Please continue to keep us notified of project updates and opportunities to continue in ongoing discussions.

Best,
Stu
--
Stuart Goldberg, PhD
Natural Scientist IV
Contractor - Ocean Associates, Inc.

Habitat Conservation Division
NOAA Fisheries, Pacific Islands Regional Office
Inouye Regional Center
1845 Wasp Blvd.
Honolulu, HI 96818
808-725-5093

MUNEKIYO HIRAGA
Planning. Project Management. Sustainable Solutions.

Michael T. Munekiyo
PRESIDENT
Karlynn K. Fukuda
EXECUTIVE VICE PRESIDENT
Mark Alexander Roy
VICE PRESIDENT
Tessa Munekiyo Ng
VICE PRESIDENT

July 22, 2016

Stuart Goldberg, PhD, Natural Scientist IV
Contractor - Ocean Associates, Inc.
Habitat Conservation Division
NOAA Fisheries, Pacific Islands Regional Office
1845 Wasp Boulevard
Honolulu, Hawai'i 96818

SUBJECT: Early Consultation Letter Request for the Department of Hawaiian Home Lands Kapa'akea Flood Mitigation Project, Kaunakakai, Moloka'i

Dear Dr. Goldberg:

Thank you for your email of May 16, 2016, responding to our request for early consultation in preparation of a Draft Environmental Assessment (EA) for the proposed Kapa'akea Flood Mitigation Project. On behalf of the State of Hawai'i, Department of Hawaiian Home Lands (DHHL) we offer the following information in response to the comments in your message.

***Comment No.1***

*It appears from the letter that the wall is just running North/South and will not be in contact with the ocean (e.g. ~100ft away). Can you verify that? Is there an East/West barrier, too?*

***Response:*** The proposed wall will not contact the ocean. According to current plans, the wall will start at a point approximately 60 feet from the shoreline and proceed roughly north along the boundary of the DHHL Homestead lots. There will also be a portion of the wall approximately 180 feet in length on the northern boundary of the DHHL Homestead lots, fronting Kamehameha V Highway. This portion will run in an east to west direction.

Maui: 305 High Street, Suite 104 • Wailuku, Hawaii 96793 • Tel: 808.244.2015 • Fax: 808.244.8729
Oahu: 735 Bishop Street, Suite 321 • Honolulu, Hawaii 96813 • Tel: 808.983.1233
www.munekiyohiraga.com

***Comment No. 2***

*From Google Earth the neighboring property is exposed and barren. Can any "soft" or revegetative approaches be considered to help reduce runoff of sediments and flooding of this and the adjacent property? This approach would also reduce the general runoff of sediments into the ocean in an area where reefs are stressed due to sediment and turbidity increases.*

***Response:*** Per the project's civil engineering consultant, plans call for any disturbed areas within the project site to be grassed to reduce erosion and sediment runoff. The property adjacent to the project area to the west is the Kōheo wetland area, which is owned by Goodfellow Bros., Inc. and not under DHHL jurisdiction. This property is not part of the project area for the proposed Kapa'akea flood mitigation project. For concerns regarding plantings within the Kōheo wetland, we would suggest you contact Goodfellow Bros. Inc. or the non-profit group Nēnē O Moloka'i, whose efforts include vegetative restoration of the Kōheo wetland.

***Comment No. 3***

*Please take proper considerations to ensure/minimize any potential long-term effects that a new wall structure may have on directly diverting storm waters directly into the ocean.*

***Response:*** The EA will address and include mitigation measures to reduce impacts to the marine environment, where applicable. The purpose of the project is to mitigate flooding of the DHHL Homestead lots from the adjacent wetlands. The project design incorporates the natural hydrology of the wetland system as a beneficial use that supports the ecosystem, and also functions as a filter system for sediment-laden stormwater flows to mitigate adverse impacts to marine resources.

***Comment No. 4***

*Please ensure that precautions are taken to minimize erosion of sediments into runoff and stormwater drains that lead to ocean (e.g. employ berms, silt fences and other mechanisms) during project activities.*

***Response:*** The proposed project includes the implementation of temporary erosion control measures and Best Management Practices (BMPs) during construction, such as installation of silt fencing, berms, sandbags, and

catchments, watering of exposed areas, and installation of absorption material areas for construction vehicles to mitigate construction-related erosion and sediment runoff.

***Comment No. 5***

*Please ensure that measures are taken to eliminate pollution from any pouring of cement/concrete and use of paints and chemicals are developed and enacted.*

***Response:*** Proper measures to avoid pollution during construction will be implemented as part of the BMP plan. The contactor will be required to follow said BMP plan.

Again, thank you for your participation in the Chapter 343, Hawai'i Revised Statutes review process. A copy of your email comments and this response will be included in the Draft EA. A copy of the Draft EA will be sent to the NOAA office for review and comment. In the meantime, if there are any questions or if additional information is required, please contact me at (808) 244-2015.

Very truly yours,

Gwendolyn Rivera

Gwendolyn Leialoha Cheney Rivera
Senior Associate

GLCR:yp
cc: James Richardson, State of Hawai'i, Department of Hawaiian Home Lands
Nancy McPherson, State of Hawai'i, Department of Hawaiian Home Lands
Chad McDonald, Mitsunaga & Associates, Inc.
Chris Ball, Mitsunaga & Associates, Inc.
Robert Hobdy
K:\DATA\MAI\DHHL Kapaakea EA 1900\Applications\EC\EC Response Letters\NOAA.res.doc

MAY 1 3 2016

DAVID Y. IGE
GOVERNOR

DOUGLAS MURDOCK
COMPTROLLER

AUDREY HIDANO
Deputy Comptroller

**STATE OF HAWAII**
**DEPARTMENT OF ACCOUNTING AND GENERAL SERVICES**
P.O. BOX 119, HONOLULU, HAWAII 96810-0119

(P)1127.6

MAY 11 2016

Ms. Gwendolyn Rivera, Senior Associates
Munekiyo Hiraga
305 High Street, Suite 104
Wailuku, Hawaii 96793

Dear Ms. Rivera:

Subject: Early Consultation Request for Kapaakea Flood Mitigation Project
Kaunakakai, Molokai
TMK: (2) 5-4-007: 009 (por), 010 (por), 011 (por), 024 (por), 025 (por)

Thank you for the opportunity to comment on the subject project. We have no comments to offer at this time as the proposed project does not impact any of the Department of Accounting and General Services' projects or existing facilities.

If you have any questions, you may call Ms. Dora Choy of the Public Works Division at 586-0488.

Sincerely,

for DOUGLAS MURDOCK
Comptroller

c: Mr. Wade Shimabukuro, District Engineer, MDO

MAY 19 2016

DAVID Y. IGE
GOVERNOR

WESLEY K. MACHIDA
DIRECTOR

RODERICK K. BECKER
DEPUTY DIRECTOR

**STATE OF HAWAII**
**DEPARTMENT OF BUDGET AND FINANCE**
P.O. BOX 150
HONOLULU, HAWAII 96810-0150

EMPLOYEES' RETIREMENT SYSTEM
HAWAII EMPLOYER-UNION HEALTH BENEFITS TRUST FUND
OFFICE OF THE PUBLIC DEFENDER

ADMINISTRATIVE AND RESEARCH OFFICE
BUDGET, PROGRAM PLANNING AND
MANAGEMENT DIVISION
FINANCIAL ADMINISTRATION DIVISION
OFFICE OF FEDERAL AWARDS MANAGEMENT (OFAM)

May 17, 2016

Ms. Gwendolyn Rivera
Senior Associate
Munekiyo Hiraga, Inc.
305 High Street, Suite 104
Wailuku, Hawaii 96793

Dear Ms. Rivera:

This is in response to your letter dated May 3, 2016, requesting comments for the environmental assessment related to the proposed construction of a concrete masonry unit wall to improve flooding conditions in the Kapa'akea area of Moloka'i, for the State of Hawaii, Department of Hawaiian Home Lands.

We have no comments at this time.

Sincerely,

WESLEY K. MACHIDA
Director of Finance

MAY 16 2016

DAVID Y. IGE
GOVERNOR OF HAWAII

VIRGINIA PRESSLER, M.D.
DIRECTOR OF HEALTH

STATE OF HAWAII
DEPARTMENT OF HEALTH
P. O. BOX 3378
HONOLULU, HI 96801-3378

In reply, please refer to:
EMD/CWB

05019PCTM.16

May 12, 2016

Ms. Gwendolyn Rivera
Senior Associate
Munekiyo Hiraga, Inc.
305 High Street, Suite 104
Wailuku, Hawaii 96793

Dear Ms. Rivera:

**SUBJECT: Comments on the Early Consultation Request for Kapaakea Flood Mitigation Project Kaunakakai, Island of Molokai, Hawaii**

The Department of Health (DOH), Clean Water Branch (CWB), acknowledges receipt of your letter, dated May 3, 2016. The DOH-CWB has reviewed the subject document and offers these comments. Please note that our review is based solely on the information provided in the subject document and its compliance with the Hawaii Administrative Rules (HAR), Chapters 11-54 and 11-55. You may be responsible for fulfilling additional requirements related to our program. We recommend that you also read our standard comments on our website at:
http://health.hawaii.gov/epo/files/2013/05/Clean-Water-Branch-Std-Comments.pdf

1. Any project and its potential impacts to State waters must meet the following criteria:

   a. Antidegradation policy (HAR, Section 11-54-1.1), which requires that the existing uses and the level of water quality necessary to protect the existing uses of the receiving State water be maintained and protected.

   b. Designated uses (HAR, Section 11-54-3), as determined by the classification of the receiving State waters.

   c. Water quality criteria (HAR, Sections 11-54-4 through 11-54-8).

2. You may be required to obtain National Pollutant Discharge Elimination System (NPDES) permit coverage for discharges of wastewater, including storm water runoff, into State surface waters (HAR, Chapter 11-55).

For NPDES general permit coverage, a Notice of Intent (NOI) form must be submitted at least 30 calendar days before the commencement of the discharge. An application for a NPDES individual permit must be submitted at least 180 calendar days before the commencement of the discharge. To request NPDES permit coverage, you must submit the applicable form ("CWB Individual NPDES Form" or "CWB NOI Form") through the e-Permitting Portal and the hard copy certification statement with the respective filing fee ($1,000 for an individual NPDES permit or $500 for a Notice of General Permit Coverage). Please open the e-Permitting Portal website located at: https://eha-cloud.doh.hawaii.gov/epermit/. You will be asked to do a one-time registration to obtain your login and password. After you register, click on the Application Finder tool and locate the appropriate form. Follow the instructions to complete and submit the form.

3. If your project involves work in, over, or under waters of the United States, it is highly recommended that you contact the Army Corp of Engineers, Regulatory Branch (Tel: 835-4303) regarding their permitting requirements.

   Pursuant to Federal Water Pollution Control Act [commonly known as the "Clean Water Act" (CWA)], Paragraph 401(a)(1), a Section 401 Water Quality Certification (WQC) is required for "[a]ny applicant for Federal license or permit to conduct any activity including, but not limited to, the construction or operation of facilities, which may **result** in any discharge into the navigable waters..." (emphasis added). The term "discharge" is defined in CWA, Subsections 502(16), 502(12), and 502(6); Title 40 of the Code of Federal Regulations, Section 122.2; and Hawaii Administrative Rules (HAR), Chapter 11-54.

4. Please note that all discharges related to the project construction or operation activities, whether or not NPDES permit coverage and/or Section 401 WQC are required, must comply with the State's Water Quality Standards. Noncompliance with water quality requirements contained in HAR, Chapter 11-54, and/or permitting requirements, specified in HAR, Chapter 11-55, may be subject to penalties of $25,000 per day per violation.

5. It is the State's position that all projects must reduce, reuse, and recycle to protect, restore, and sustain water quality and beneficial uses of State waters. Project planning should:

   a. Treat storm water as a resource to be protected by integrating it into project planning and permitting. Storm water has long been recognized as a source of irrigation that will not deplete potable water resources. What is often overlooked is that storm water recharges ground water supplies and feeds streams and estuaries; to ensure that these water cycles are not disrupted, storm water cannot be relegated as a waste product of impervious surfaces. Any project planning must recognize storm water as an asset that sustains and protects

natural ecosystems and traditional beneficial uses of State waters, like community beautification, beach going, swimming, and fishing. The approaches necessary to do so, including low impact development methods or ecological bio-engineering of drainage ways must be identified in the planning stages to allow designers opportunity to include those approaches up front, prior to seeking zoning, construction, or building permits.

b. Clearly articulate the State's position on water quality and the beneficial uses of State waters. The plan should include statements regarding the implementation of methods to conserve natural resources (e.g. minimizing potable water for irrigation, gray water re-use options, energy conservation through smart design) and improve water quality.

c. Consider storm water Best Management Practice (BMP) approaches that minimize the use of potable water for irrigation through storm water storage and reuse, percolate storm water to recharge groundwater to revitalize natural hydrology, and treat storm water which is to be discharged.

d. Consider the use of green building practices, such as pervious pavement and landscaping with native vegetation, to improve water quality by reducing excessive runoff and the need for excessive fertilization, respectively.

e. Identify opportunities for retrofitting or bio-engineering existing storm water infrastructure to restore ecological function while maintaining, or even enhancing, hydraulic capacity. Particular consideration should be given to areas prone to flooding, or where the infrastructure is aged and will need to be rehabilitated.

If you have any questions, please visit our website at: http://health.hawaii.gov/cwb/, or contact the Engineering Section, CWB, at (808) 586-4309.

Sincerely,

ALEC WONG, P.E., CHIEF
for Clean Water Branch

CTM:bk

c: EPO [via e-mail only]

JUN 24 2016

DAVID Y. IGE
GOVERNOR OF HAWAII

VIRGINIA PRESSLER, M.D.
DIRECTOR OF HEALTH

STATE OF HAWAII
DEPARTMENT OF HEALTH
P. O. BOX 3378
HONOLULU, HI 96801-3378

In reply, please refer to:
File:

06044PGH.16

June 21, 2016

Ms. Gwendolyn Rivera
Senior Associate
Mukekiyo Hiraga, Inc.
305 High Street, Suite 104
Wailuku, Hawaii 96793

Dear Ms. Rivera:

**SUBJECT: Comments on Early Consultation for Kapaakea Flood Mitigation Project, Kaunakakai, Molokai**

The Department of Health (DOH), Clean Water Branch (CWB), acknowledges receipt of your letter, dated May 3, 2016, requesting comments on your project. The DOH-CWB has reviewed the subject document and offers these comments. Please note that our review is based solely on the information provided in the subject document and its compliance with the Hawaii Administrative Rules (HAR), Chapters 11-54 and 11-55. You may be responsible for fulfilling additional requirements related to our program. We recommend that you also read our standard comments on our website at: http://health.hawaii.gov/epo/files/2013/05/Clean-Water-Branch-Std-Comments.pdf

1. Any project and its potential impacts to State waters must meet the following criteria:

   a. Antidegradation policy (HAR, Section 11-54-1.1), which requires that the existing uses and the level of water quality necessary to protect the existing uses of the receiving State water be maintained and protected.

   b. Designated uses (HAR, Section 11-54-3), as determined by the classification of the receiving State waters.

   c. Water quality criteria (HAR, Sections 11-54-4 through 11-54-8).

2. You may be required to obtain National Pollutant Discharge Elimination System (NPDES) permit coverage for discharges of wastewater, including storm water runoff, into State surface waters (HAR, Chapter 11-55).

For NPDES general permit coverage, a Notice of Intent (NOI) form must be submitted at least 30 calendar days before the commencement of the discharge. An application for a NPDES individual permit must be submitted at least 180 calendar days before the commencement of the discharge. To request NPDES permit coverage, you must submit the applicable form ("CWB Individual NPDES Form" or "CWB NOI Form") through the e-Permitting Portal and the hard copy certification statement with the respective filing fee ($1,000 for an individual NPDES permit or $500 for a Notice of General Permit Coverage). Please open the e-Permitting Portal website located at: https://eha-cloud.doh.hawaii.gov/epermit/. You will be asked to do a one-time registration to obtain your login and password. After you register, click on the Application Finder tool and locate the appropriate form. Follow the instructions to complete and submit the form.

3. If your project involves work in, over, or under waters of the United States, it is highly recommended that you contact the Army Corp of Engineers, Regulatory Branch (Tel: 835-4303) regarding their permitting requirements.

   Pursuant to Federal Water Pollution Control Act [commonly known as the "Clean Water Act" (CWA)], Paragraph 401(a)(1), a Section 401 Water Quality Certification (WQC) is required for "[a]ny applicant for Federal license or permit to conduct any activity including, but not limited to, the construction or operation of facilities, which may **result** in any discharge into the navigable waters..." (emphasis added). The term "discharge" is defined in CWA, Subsections 502(16), 502(12), and 502(6); Title 40 of the Code of Federal Regulations, Section 122.2; and Hawaii Administrative Rules (HAR), Chapter 11-54.

4. Please note that all discharges related to the project construction or operation activities, whether or not NPDES permit coverage and/or Section 401 WQC are required, must comply with the State's Water Quality Standards. Noncompliance with water quality requirements contained in HAR, Chapter 11-54, and/or permitting requirements, specified in HAR, Chapter 11-55, may be subject to penalties of $25,000 per day per violation.

5. It is the State's position that all projects must reduce, reuse, and recycle to protect, restore, and sustain water quality and beneficial uses of State waters. Project planning should:

   a. Treat storm water as a resource to be protected by integrating it into project planning and permitting. Storm water has long been recognized as a source of irrigation that will not deplete potable water resources. What is often overlooked is that storm water recharges ground water supplies and feeds streams and estuaries; to ensure that these water cycles are not disrupted, storm water cannot be relegated as a waste product of impervious surfaces. Any project planning must recognize storm water as an asset that sustains and protects

natural ecosystems and traditional beneficial uses of State waters, like community beautification, beach going, swimming, and fishing. The approaches necessary to do so, including low impact development methods or ecological bio-engineering of drainage ways must be identified in the planning stages to allow designers opportunity to include those approaches up front, prior to seeking zoning, construction, or building permits.

b. Clearly articulate the State's position on water quality and the beneficial uses of State waters. The plan should include statements regarding the implementation of methods to conserve natural resources (e.g. minimizing potable water for irrigation, gray water re-use options, energy conservation through smart design) and improve water quality.

c. Consider storm water Best Management Practice (BMP) approaches that minimize the use of potable water for irrigation through storm water storage and reuse, percolate storm water to recharge groundwater to revitalize natural hydrology, and treat storm water which is to be discharged.

d. Consider the use of green building practices, such as pervious pavement and landscaping with native vegetation, to improve water quality by reducing excessive runoff and the need for excessive fertilization, respectively.

e. Identify opportunities for retrofitting or bio-engineering existing storm water infrastructure to restore ecological function while maintaining, or even enhancing, hydraulic capacity. Particular consideration should be given to areas prone to flooding, or where the infrastructure is aged and will need to be rehabilitated.

If you have any questions, please visit our website at: http://health.hawaii.gov/cwb/, or contact the Engineering Section, CWB, at (808) 586-4309.

Sincerely,

Daryl Lum FOR AW

ALEC WONG, P.E., CHIEF
Clean Water Branch

GH:ak

c: DOH-EPO #16-174 [via e-mail Noella.Narimatsu@doh.hawaii.gov only]

MUNEKIYO HIRAGA
Planning. Project Management. Sustainable Solutions.

Michael T. Munekiyo
PRESIDENT
Karlynn K. Fukuda
EXECUTIVE VICE PRESIDENT
Mark Alexander Roy
VICE PRESIDENT
Tessa Munekiyo Ng
VICE PRESIDENT

July 22, 2016

Alec Wong, P.E., Chief
State of Hawai'i
Department of Health
Clean Water Branch
P. O. Box 3378
Honolulu, Hawai'i 96801

SUBJECT: Early Consultation Letter Request for the Department of Hawaiian Home Lands Kapa'akea Flood Mitigation Project, Kaunakakai, Moloka'i (References EMD/CWB 05019PCTM.16 and 06044PGH.16)

Dear Mr. Wong:

Thank you for your comment letters dated May 12, 2016 and June 21, 2016, responding to our request for early consultation in preparation of a Draft Environmental Assessment (EA) for the proposed Kapa'akea Flood Mitigation Project. On behalf of the State of Hawai'i, Department of Hawaiian Home Lands (DHHL) we offer the following responses in the order of your comments.

***Comment No.1***

*The Department of Health (DOH), Clean Water Branch (CWB), acknowledges receipt of your letter, dated May 3, 2016. The DOH-CWB has reviewed the subject document and offers these comments. Please note that our review is based solely on the information provided in the subject document and its compliance with the Hawaii Administrative Rules (HAR), Chapters 11-54 and 11-55. You may be responsible for fulfilling additional requirements related to our program. We recommend that you also read our standard comments on our website at: http://health.hawaii.gov/epo/files/2013/05/Clean-Water-Branch-Std-Comments.pdf*

***Response:*** The standard comments noted on your website will be reviewed by the design team, as may be applicable for the proposed project.

***Comment No. 2***

*Any project and its potential impacts to State waters must meet the following criteria:*

a. *Antidegradation policy (HAR, Section 11-54-1.1), which requires that the existing uses and the level of water quality necessary to protect the existing uses of the receiving State water be maintained and protected.*

b. *Designated uses (HAR, Section 11-54-3), as determined by the classification of the receiving State waters.*

c. *Water quality criteria (HAR, Sections 11-54-4 through 11-54-8).*

***Response:*** The proposed onsite runoff will be the same as the predevelopment onsite runoff as a result of the project. As discussed in the Draft EA, the project design includes a new swale and incorporates the existing topography and natural hydrology of the existing nearby Kōheo wetlands which discharges flow into the ocean. Use of the natural ecosystem in the project area is a low impact method that mitigates adverse impacts to the environment and ocean.

***Comment No. 3***

*You may be required to obtain National Pollutant Discharge Elimination System (NPDES) permit coverage for discharges of wastewater, including storm water runoff, into State surface waters (HAR, Chapter 11-55).*

*For NPDES general permit coverage, a Notice of Intent (NOI) form must be submitted at least 30 calendar days before the commencement of the discharge. An application for a NPDES individual permit must be submitted at least 180 calendar days before the commencement of the discharge. To request NPDES permit coverage, you must submit the applicable form ("CWB Individual NPDES Form" or "CWB NOI Form") through the e-Permitting Portal and the hard copy certification statement with the respective filing fee ($1,000 for an individual NPDES permit or $500 for a Notice of General Permit Coverage). Please open the e-Permitting Portal website located at: https://eha-cloud.doh.hawaii.gov/epermit/. You will be asked to do a one-time registration to obtain your login and password. After you register, click on the Application Finder tool and locate the appropriate form. Follow the instructions to complete and submit the form.*

***Response:*** The design consultant will review the applicable NPDES permit coverage requirements as it relates to the project scope and requirements.

***Comment No. 4***

*If your project involves work in, over, or under waters of the United States, it is highly recommended that you contact the Army Corp of Engineers, Regulatory Branch (Tel: 835-4303) regarding their permitting requirements.*

*Pursuant to Federal Water Pollution Control Act [commonly known as the "Clean Water Act" (CWA)], Paragraph 401(a)(1), a Section 401 Water Quality Certification (WQC) is required for "[a]ny applicant for Federal license or permit to conduct any activity including, but not limited to, the construction or operation of facilities, which may* ***result*** *in any discharge into the navigable waters..." (emphasis added). The term "discharge" is defined in CWA, Subsections 502(16), 502(12), and 502(6); Title 40 of the Code of Federal Regulations, Section 122.2; and Hawaii Administrative Rules (HAR), Chapter 11-54.*

***Response:*** The U.S. Army Corp of Engineers (USACE) provided comments to our request for early consultation in regards to the proposed project. Further information regarding the project is being submitted to the USACE for consultation regarding Department of Army permit requirements.

***Comment No. 5***

*Please note that all discharges related to the project construction or operation activities, whether or not NPDES permit coverage and/or Section 401 WQC are required, must comply with the State's Water Quality Standards. Noncompliance with water quality requirements contained in HAR, Chapter 11-54, and/or permitting requirements, specified in HAR, Chapter 11-55, may be subject to penalties of $25,000 per day per violation.*

***Response:*** It is acknowledged that all discharges related to the proposed project construction or operations are to comply with the State's Water Quality Standards, notwithstanding the requirement for a NPDES permit and/or Section 401 Water Quality Certification.

***Comment No. 6***

*It is the State's position that all projects must reduce, reuse, and recycle to protect, restore, and sustain water quality and beneficial uses of State waters. Project planning should:*

a. *Treat storm water as a resource to be protected by integrating it into project planning and permitting. Storm water has long been recognized as a source of irrigation that will not deplete potable water resources. What is often overlooked is that storm water recharges ground water supplies and feeds streams and estuaries; to ensure that these water cycles are not disrupted, storm water cannot be relegated as a waste product of impervious surfaces. Any project planning must recognize storm water as an asset that sustains and protects natural ecosystems and traditional beneficial uses of State waters, like community beautification, beach going, swimming, and fishing. The approaches necessary to do so, including low impact development methods or ecological bio-engineering of drainage ways must be identified in the planning stages to allow designers opportunity to include those approaches up front, prior to seeking zoning, construction, or building permits.*

***Response:*** As discussed in the Draft EA, the project design includes a new swale and incorporates the existing topography and natural hydrology of the existing nearby Kōheo wetlands. Use of the natural ecosystem in the project area is a low impact method that mitigates adverse impacts to the environment.

***Comment No. 7***

b. *Clearly articulate the State's position on water quality and the beneficial uses of State waters. The plan should include statements regarding the implementation of methods to conserve natural resources (e.g. minimizing potable water for irrigation, gray water re-use options, energy conservation through smart design) and improve water quality.*

***Response:*** As previously noted in our response, the project design incorporates the existing topography and wetland ecosystem. As a flood control measure, the plan mitigates adverse impact to the environment and protects the DHHL Homestead lots from flooding during heavy wet weather.

***Comment No. 8***

c. *Consider storm water Best Management Practice (BMP) approaches that minimize the use of potable water for irrigation through storm water storage and reuse, percolate storm water to recharge groundwater to revitalize natural hydrology, and treat storm water which is to be discharged.*

***Response:*** As discussed in the Draft EA, the project design incorporates the natural hydrology of the wetland system as a beneficial use that supports the ecosystem, and also functions as a filter system for land based pollutants and sediment-laden storm water flows to mitigate adverse impact to marine resources.

***Comment No. 9***

d. *Consider the use of green building practices, such as pervious pavement and landscaping with native vegetation, to improve water quality by reducing excessive runoff and the need for excessive fertilization, respectively.*

***Response:*** The proposed vertical CMU wall and swale project does not result in significant change to the existing pervious and hardened surfaces in the project area. The project includes Best Management Practices (BMPs) such as vegetating slopes and exposed areas as discussed in the Draft EA.

***Comment No. 10***

e. *Identify opportunities for retrofitting or bio-engineering existing storm water infrastructure to restore ecological function while maintaining, or even enhancing, hydraulic capacity. Particular consideration should be given to areas prone to flooding, or where the infrastructure is aged and will need to be rehabilitated.*

***Response:*** As discussed in the Draft EA, the project area is prone to flooding and the project design is intended to protect the DHHL Homestead lots during storm events by replacing the existing chainlink fence and stacked rubble wall with a solid CMU wall and swale. The ecosystem in the area is sustained, as the project design relies on the existing natural topography and hydrology of the adjacent Kōheo wetlands.

Again, thank you for your participation in the Chapter 343, Hawai'i Revised Statutes review process. Copies of your comment letters and our response will be included in the Draft EA. A copy of the Draft EA will be sent to your office for review and comment. Should you have any questions or require further information regarding the proposed action, please contact me at (808)244-2015.

Very truly yours,

Gwendolyn Leialoha Cheney Rivera
Senior Associate

GLCR:yp
cc: James Richardson, State of Hawai'i, Department of Hawaiian Home Lands
Nancy McPherson, State of Hawai'i, Department of Hawaiian Home Lands
Chad McDonald, Mitsunaga & Associates, Inc.
Chris Ball, Mitsunaga & Associates, Inc.
K:\DATA\MAI\DHHL Kapaakea EA 1900\Applications\EC\EC Response Letters\DOH CWB.doc

MAY 16 2016

DAVID Y. IGE
GOVERNOR OF HAWAII

VIRGINIA PRESSLER, M.D.
DIRECTOR OF HEALTH

LORRIN W. PANG, M.D., M.P.H.
DISTRICT HEALTH OFFICER

**STATE OF HAWAII**
**DEPARTMENT OF HEALTH**
**MAUI DISTRICT HEALTH OFFICE**
54 HIGH STREET
WAILUKU, HAWAII 96793-3378

May 13, 2016

Ms. Gwendolyn Rivera
Senior Associate
Munekiyo Hiraga
305 High Street, Suite 104
Wailuku, Hawai`i 96793

Dear Ms. Rivera:

**Subject:** **Early Consultation Request for Kapa'akea Flood Mitigation Project Kaunakakai, Molokai**
**TMK: (2) 5-4-007:009 (por.); 5-4-007:010 (por.); 5-4-007:011 (por.); 5-4-007:024 (por.); 5-4-007:025 (por.)**

Thank you for the opportunity to review this project. We have the following comments to offer:

1. National Pollutant Discharge Elimination System (NPDES) permit coverage may be required for this project. The Clean Water Branch should be contacted at 808 586-4309.

2. The noise created during the construction phase of the project may exceed the maximum allowable levels as set forth in Hawaii Administrative Rules, Chapter 11-46, "Community Noise Control." A noise permit may be required and should be obtained before the commencement of work. Please call the Indoor & Radiological Health Branch at 808 586-4700.

It is strongly recommended that the Standard Comments found at the Department's website: http://health.hawaii.gov/epo/home/landuse-planning-review-program/ be reviewed and any comments specifically applicable to this project should be adhered to.

Should you have any questions, please contact me at 808 984-8230 or email me at patricia.kitkowski@doh.hawaii.gov.

Sincerely,

Patti Kitkowski

Patti Kitkowski
District Environmental Health Program Chief

c EPO

MUNEKIYO HIRAGA
Planning. Project Management. Sustainable Solutions.

Michael T. Munekiyo
PRESIDENT
Karlynn K. Fukuda
EXECUTIVE VICE PRESIDENT
Mark Alexander Roy
VICE PRESIDENT
Tessa Munekiyo Ng
VICE PRESIDENT

July 22, 2016

Patti Kitkowski
District Environmental Health
Program Chief
State of Hawai'i
Department of Health
Maui District Office
54 High Street
Wailuku, Hawai'i 96793

SUBJECT: Early Consultation Letter Request for the Department of Hawaiian Home Lands Kapa'akea Flood Mitigation Project, Kaunakakai, Moloka'i

Dear Ms. Kitkowski:

Thank you for your letter of May 13, 2016, responding to our request for early consultation in preparation of a Draft Environmental Assessment (EA) for the proposed Kapa'akea Flood Mitigation Project. On behalf of the State of Hawai'i, Department of Hawaiian Home Lands (DHHL) we offer the following information in response to the comments in your letter.

***Comment No. 1***

*National Pollutant Discharge Elimination System (NPDES) permit coverage may be required for this project. The Clean Water Branch should be contacted at (808) 586-4309.*

***Response:*** The civil engineering consultant will review the applicable NPDES permit coverage requirements as it relates to the project scope and requirements. Should an NPDES permit be required, the permit will be secured prior to the start of construction.

***Comment No. 2***

*The noise created during the construction phase of the project may exceed the maximum allowable levels as set forth in Hawai'i Administrative Rules, Chapter 11-46, "Community Noise Control". A noise permit may be required and should be*

*obtained before the commencement of work. Please call the Indoor & Radiological Health Branch at (808) 586-4700.*

***Response:*** The selected contractor will be required to comply with the pertinent Hawai'i Administrative Rules relating to allowable noise levels. Should a noise permit be required, said permit will be secured prior to the start of construction.

Again, thank you for your participation in the Chapter 343, Hawai'i Revised Statutes review process. A copy of your letter and this response will be included in the Draft EA. A copy of the Draft EA will be sent to your office for review and comment. In the meantime, if there are any questions or if additional information is required, please contact me at 244-2015.

Very truly yours,

Gwendolyn Rivera

Gwendolyn Leialoha Cheney Rivera
Senior Associate

GLCR:yp
cc: James Richardson, State of Hawai'i, Department of Hawaiian Home Lands
Nancy McPherson, State of Hawai'i, Department of Hawaiian Home Lands
Chad McDonald, Mitsunaga and Associates, Inc.
Chris Ball, Mitsunaga and Associates, Inc.
K:\DATA\MA\DHHL Kapaakea EA 1900\Applications\EC\EC Response Letters\Army.res.doc

JUN 16 2016

DAVID Y. IGE
GOVERNOR OF HAWAII

VIRGINIA PRESSLER, M.D.
DIRECTOR OF HEALTH

**STATE OF HAWAII**
**DEPARTMENT OF HEALTH**
P. O. BOX 3378
HONOLULU, HI 96801-3378

In reply, please refer to:
File:

EPO 16-174

June 3, 2016

Ms. Gwendolyn Rivera
Senior Associate
Munekiyo Hiraga, Inc.
305 High Street, Suite 104
Wailuku, Hawaii 96793

Dear Ms. Rivera:

**SUBJECT: Early Consultation (EC) for Kapaakea Flood Mitigation Project**
**Kaunakakai, Molokai**
**TMK: (2) 5-4- 007:009 (par.) (Parcel 9); (2) 5-4-007:010 (par.) (Parcel 1 O);**
**(2) 5-4-007:011 (par.) (Parcel 11); (2) 5-4-007:024 (par.) (Parcel 24); and**
**(2) 5-4-007:025 (par.) (Parcel 25)**

The Department of Health (DOH), Environmental Planning Office (EPO), acknowledges receipt of your EC to our office on May 5, 2016. Thank you for allowing us to review and comment on the proposed project. The EC was routed to the District Health Office on Maui and the Clean Water Branch. They will provide specific comments to you if necessary. EPO recommends that you review the standard comments and available strategies to support sustainable and healthy design provided at: http://health.hawaii.gov/epo/landuse. Projects are required to adhere to all applicable standard comments.

EPO suggests you review guidance maps and viewers available on the Environmental Planning GIS website: http://health.hawaii.gov/epo/egis.

EPO also encourages you to examine and utilize the Hawaii Environmental Health Portal. The portal provides links to our e-Permitting Portal, Environmental Health Warehouse, Groundwater Contamination Viewer, Hawaii Emergency Response Exchange, Hawaii State and Local Emission Inventory System, Water Pollution Control Viewer, Water Quality Data, Warnings, Advisories and Postings. The Portal is continually updated. Please visit it regularly at: https://eha-cloud.doh.hawaii.gov

We suggest you review the requirements for the National Pollutant Discharge Elimination System (NPDES) permit. We recommend contacting the Clean Water Branch at (808) 586-4309 or cleanwaterbranch@doh.hawaii.gov after relevant information is reviewed at:

1. http://health.hawaii.gov/cwb
2. http://health.hawaii.gov/cwb/site-map/clean-water-branch-home-page/standard-npdes-permit-conditions
3. http://health.hawaii.gov/cwb/site-map/clean-water-branch-home-page/forms

We request that you utilize all of this information on your proposed project to increase sustainable, innovative, inspirational, transparent and healthy design.

Mahalo nui loa,

Laura Leialoha Phillips McIntyre, AICP
Program Manager, Environmental Planning Office

LM:nn

Attachments:
Attachment 1: EPO Draft Environmental Health Management Map - Molokai
Attachment 2: Clean Water Branch: Water Quality Standards Map - Molokai
Attachment 3: OEQC Viewer Map of Project Area - - http://eha-web.doh.hawaii.gov/oeqc-viewer

c: DOH: DHO Maui, CWB {via email only}


Environmental Health Manageme...
254007009
Search result
254007009
Legend
Inactive Landfills
Active Landfills
Air Quality Monitoring Sites
Superfund Sites
Water Quality Monitoring Sites
Hawaii State House Districts
Hawaii State Senate Districts - State_Senate_Districts
State Land Use Districts
Agricultural
Conservation
Rural
Urban
2010 Census Designated Places (CDP) - CDPs_2010
3 Nautical Mile Boundary
Water Quality Classification
A
AA
Underground Injection Control Line
Esri, HERE, DeLorme, NGA, USGS

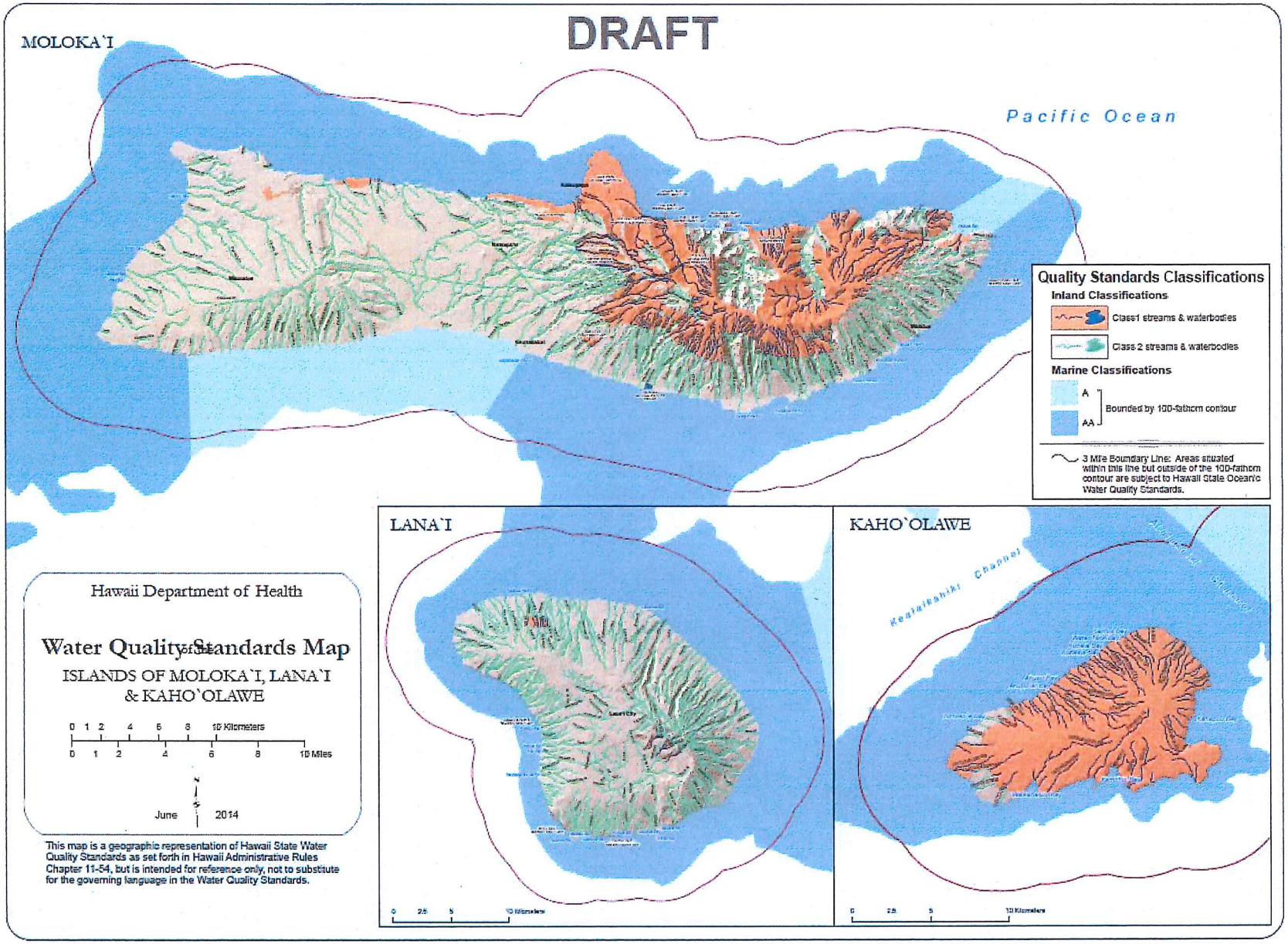
DRAFT
MOLOKA`I
Pacific Ocean
Quality Standards Classifications
Inland Classifications
Class1 streams & waterbodies
Class 2 streams & waterbodies
Marine Classifications
A
AA
Bounded by 100-fathom contour
3 Mile Boundary Line: Areas situated within this line but outside of the 100-fathom contour are subject to Hawaii State Ocean'c Water Quality Standards.
LANA`I
KAHO`OLAWE
Kealaikahiki Channel
Hawaii Department of Health
Water Quality Standards Map
ISLANDS OF MOLOKA`I, LANA`I & KAHO`OLAWE
0 1 2 4 6 8 10 Kilometers
0 1 2 4 6 8 10 Miles
June 2014
This map is a geographic representation of Hawaii State Water Quality Standards as set forth in Hawaii Administrative Rules Chapter 11-54, but is intended for reference only, not to substitute for the governing language in the Water Quality Standards.


hawaii.gov
Stay Connected
OEQC Viewer
kaunakakai molokai
25 sites found
Results
Filter
Molokai Properties Limited Continued Use of MIS (DEA-AFNSI)
Environmental Assessment (Applicant)
Kalaupapa Dock Repairs (DEA-AFNSI)
Environmental Assessment (Agency)
Kalaupapa Dock Repair (FEA-FONSI)
Environmental Assessment (Applicant)
Programmatic General Permit Agreement for Restoration of Fishponds (FEA-FONSI)
Environmental Assessment (Agency)
Mokapu Rat Eradication (FEA-FONSI)
Environmental Assessment (Agency)
Field Release Binodoxys Biocontrol of Melon Aphid (DEA-AFNSI)
Environmental Assessment (Agency)
SANDWICH ISLES COMM SUB FIBER OPTIC CABLE (FEA-FONSI)
Environmental Assessment (Applicant)
Integrated Cultural Resources Man Plan (FEA-FONSI)
Environmental Assessment (Applicant)
SANDWICH ISLES COMM SUB FIBER OPTIC CABLE (FEA-FONSI)
Environmental Assessment (Applicant)
Field Release of Eurytoma Erythrina Gall Wasp BioControl (FEA-FONSI)
Environmental Assessment (Agency)
Field Release Fcplus Biocontrol of Medfly (DEA-AFNSI)
Environmental Assessment (Agency)
Nettle Caterpillar (FEA-FONSI)
Environmental Assessment (Agency)
Papahanaumokuakea Management Plan (FEA-FONSI)
Environmental Assessment (Agency)
Statewide Fish Aggregating Device Program (DEA-AFNSI)
Environmental Assessment (Agency)
Biocontrol Strawberry Guava (FEA-FONSI)
Hybrid
Google

MUNEKIYO HIRAGA
Planning. Project Management. Sustainable Solutions.

Michael T. Munekiyo
PRESIDENT
Karlynn K. Fukuda
EXECUTIVE VICE PRESIDENT
Mark Alexander Roy
VICE PRESIDENT
Tessa Munekiyo Ng
VICE PRESIDENT

July 22, 2016

Laura Leialoha Phillips McIntyre, AICP, Program Manager
Department of Health
Environmental Planning Office
State of Hawai'i
P.O. Box 3378
Honolulu, Hawai'i 96801-3378

SUBJECT: Early Consultation Letter Request for the Department of Hawaiian Home Lands Kapa'akea Flood Mitigation Project, Kaunakakai, Moloka'i (EPO 16-174)

Dear Ms. McIntyre:

Thank you for your letter dated June 3, 2016, responding to our request for early consultation in preparation for a Draft Environmental Assessment (EA) for the proposed Kapa'akea Flood Mitigation Project. As recommended, the State of Hawai'i, Department of Hawaiian Home Lands (DHHL) will review the standard comments and other information provided in your letter. Also, on behalf of DHHL we will review the updated Water Quality Standards Maps for Moloka'i. We note that both the District Health Office on Maui and the Clean Water Branch have provided comments on the project through separate correspondence.

Again, thank you for your participation in the Chapter 343, Hawai'i Revised Statutes review process. We appreciate your input and a copy of your letter and this response will be included in the Draft EA. A copy of the Draft EA will be sent to your office for review and comment. In the meantime, if there are any questions or if additional information is needed, please contact me at (808) 244-2015.

Very truly yours,

Gwendolyn Rivera

Gwendolyn Leialoha Cheney Rivera
Senior Associate

GLCR:yp
cc: James Richardson, State of Hawai'i, Department of Hawaiian Home Lands
Nancy McPherson, State of Hawai'i, Department of Hawaiian Home Lands
Chad McDonald, Mitsunaga and Associates, Inc.
Chris Ball, Mitsunaga and Associates, Inc.


Maui: 305 High Street, Suite 104 ◦ Wailuku, Hawaii 96793 ◦ Tel: 808.244.2015 ◦ Fax: 808.244.8729
Oahu: 735 Bishop Street, Suite 321 ◦ Honolulu, Hawaii 96813 ◦ Tel: 808.983.1233
www.munekiyohiraga.com

MAY 23 2016

DAVID Y. IGE
GOVERNOR OF HAWAII

SUZANNE D. CASE
CHAIRPERSON
BOARD OF LAND AND NATURAL RESOURCES
COMMISSION ON WATER RESOURCE
MANAGEMENT

**STATE OF HAWAII**
**DEPARTMENT OF LAND AND NATURAL RESOURCES**
**LAND DIVISION**

POST OFFICE BOX 621
HONOLULU, HAWAII 96809

May 23, 2016

Munekiyo & Hiraga, Inc.
Attention: Ms. Gwendolyn Rivera, Senior Associate via email: planning@mhplanning.com
305 High Street, Suite 104
Wailuku, Hawaii 96793

Dear Ms. Rivera:

SUBJECT: Early Consultation Request for Kapa'akea Flood Mitigation Project

Thank you for the opportunity to review and comment on the subject matter. The Department of Land and Natural Resources' (DLNR) Land Division distributed or made available a copy of your report pertaining to the subject matter to DLNR Divisions for their review and comments.

At this time, enclosed are comments from the Engineering Division on the subject matter. Should you have any questions, please feel free to call Lydia Morikawa at 587-0410. Thank you.

Sincerely,

Russell Y. Tsuji
Land Administrator

cc: Central Files

DAVID Y. IGE
GOVERNOR OF HAWAII

'16 MAY 11 AM09:57 ENGINEERING

SUZANNE D. CASE
CHAIRPERSON
BOARD OF LAND AND NATURAL RESOURCES
COMMISSION ON WATER RESOURCE MANAGEMENT

**STATE OF HAWAII**
**DEPARTMENT OF LAND AND NATURAL RESOURCES**
**LAND DIVISION**

POST OFFICE BOX 621
HONOLULU, HAWAII 96809

May 9, 2016

**MEMORANDUM**

TO: FR:

**DLNR Agencies:**
___Div. of Aquatic Resources
___Div. of Boating & Ocean Recreation
_X_ Engineering Division
___Div. of Forestry & Wildlife
___Div. of State Parks
_X_ Commission on Water Resource Management
_X_ Office of Conservation & Coastal Lands
_X_ Land Division – Maui District
_X_ Historic Preservation

RECEIVED
LAND DIVISION
2016 MAY 19 AM 11:08
DEPT. OF LAND & NATURAL RESOURCES
STATE OF HAWAII

FROM: Russell Y. Tsuji, Land Administrator
SUBJECT: Early Consultation Request for Kapa'akea Flood Mitigation Project
LOCATION: Kaunakakai, Island of Molokai; TMK: (2) 5-4-007:009, 010, 011, 024 & 025 (portions)
APPLICANT: Department of Hawaiian Home Lands

Transmitted for your review and comment is information on the above-referenced project. We would appreciate your comments on this project. Please submit any comments by **May 20, 2016.**

If no response is received by this date, we will assume your agency has no comments. If you have any questions about this request, please contact Lydia Morikawa at 587-0410. Thank you.

Attachments

( ) We have no objections.
( ) We have no comments.
(X) Comments are attached.

Signed: _____

Print Name: Carty S. Chang, Chief Engineer
Date: 5/12/16

cc: Central Files

DEPARTMENT OF LAND AND NATURAL RESOURCES
ENGINEERING DIVISION

**To: Land Division**
**Ref: Early Consultation Request for Kapa'akea Flood Mitigation Project, Kaunakakai, Molokai**

**COMMENTS**

The rules and regulations of the National Flood Insurance Program (NFIP), Title 44 of the Code of Federal Regulations (44CFR), are in effect when development falls within a designated Flood Hazard.

The owner or the project property and/or their representative is responsible to research the Flood Hazard Zone designation for the project. Flood Hazard Zone designations can be found using the Flood Insurance Rate Map (FIRM), which can be accessed through the Flood Hazard Assessment Tool (FHAT) (http://gis.hawaiinfip.org/FHAT).

National Flood Insurance Program establishes the rules and regulations of the NFIP - Title 44 of the Code of Federal Regulations (44CFR). The NFIP Zone X is a designation where there is no perceived flood impact. Therefore, the NFIP does not regulate any development within a Zone X designation.

Be advised that 44CFR reflects the minimum standards as set forth by the NFIP. Local community flood ordinances may take precedence over the NFIP standards as local designations prove to be more restrictive. If there are questions regarding the local flood ordinances, please contact the applicable County NFIP Coordinators below:

- Oahu: City and County of Honolulu, Department of Planning and Permitting (808) 768-8098.
- Hawaii Island: County of Hawaii, Department of Public Works (808) 961-8327.
- Maui/Molokai/Lanai County of Maui, Department of Planning (808) 270-7253.
- Kauai: County of Kauai, Department of Public Works (808) 241-4846.

Signed: _____
CARTY S. CHANG, CHIEF ENGINEER

Date: 5/12/16

MUNEKIYO HIRAGA
Planning. Project Management. Sustainable Solutions.

Michael T. Munekiyo
PRESIDENT
Karlynn K. Fukuda
EXECUTIVE VICE PRESIDENT
Mark Alexander Roy
VICE PRESIDENT
Tessa Munekiyo Ng
VICE PRESIDENT

July 22, 2016

Russell Y. Tsuji, Land Administrator
State of Hawai'i
Department of Land and Natural Resources
Post Office Box 621
Honolulu, Hawai'i 96809

SUBJECT: Early Consultation Letter Request for the Department of Hawaiian Home Lands Kapa'akea Flood Mitigation Project, Kaunakakai, Moloka'i

Dear Mr. Tsuji:

Thank you for your letter of May 23, 2016, which included responses from the Department of Land and Natural Resources (DLNR), Engineering Division to our request for early consultation in preparation of a Draft Environmental Assessment (EA) for the proposed Kapa'akea Flood Mitigation Project. On behalf of the State of Hawai'i, Department of Hawaiian Home Lands (DHHL) we offer the following information in response to the comments in your message.

***Comment No.1***

*The rules and regulations of the National Flood Insurance Program (NFIP), Title 44 of the Code of Federal Regulations (44CFR), are in effect when development falls within a designated Flood Hazard.*

***Response:*** It is noted that the rules and regulations of NFIP, Title 44 of CFR will apply, as the proposed project area falls within a designated Flood Hazard area.

***Comment No. 2***

*The owner or the project property and/or their representative is responsible to research the Flood Hazard Zone designation for the project. Flood Hazard Zone designations can be found using the Flood Insurance Rate Map (FIRM), which can be accessed through the Flood Hazard Assessment Tool (FHAT) (http://gis.hawaiinfip.org/FHAT).*

***Response:*** The Flood Hazard Zones in the proposed project area have been determined to be Zone AE, representing a special flood hazard area that is subject to flooding by the one (1) percent annual chance flood, and Zone VE, representing coastal areas with a flood elevation of 12 feet and a one (1) percent or greater chance of flooding and additional hazard associated with storm waves. The flood zone designation for the project is addressed in the Draft Environmental Assessment (EA). See **Exhibit "1"**, Flood Insurance Rate Map.

***Comment No. 3***

*National Flood Insurance Program establishes the rules and regulations of the NFIP – Title 44 of the Code of Federal Regulations (44CFR). The NFIP Zone X is a designation where there is no perceived flood impact. Therefore, the NFIP does not regulate any development within a Zone X designation.*

***Response:*** As stated in response to Comment No. 1, it is acknowledged that the rules and regulations of NFIP, Title 44 of CFR will be in effect for this project.

***Comment No. 4***

*Local community flood ordinances may take precedence over the NFIP standards as local designations prove to be more restrictive. If there are any questions regarding the local flood ordinances, please contact the applicable County NFIP Coordinators below:*

- *Oahu: City and County of Honolulu, Department of Planning and Permitting (808) 768-8098.*
- *Hawai'i Island: County of Hawai'i, Department of Public Works (808) 961-8327.*
- *Maui/Moloka'i/Lana'i: County of Maui, Department of Planning (808) 270-7253.*
- *Kauai: County of Kauai, Department of Public Works (808) 241-4846.*

***Response:*** It is acknowledged that local flood ordinances may apply. A County of Maui Flood Development Permit will be obtained, as may be applicable to the project. Consultation with the County of Maui, Department of Planning, is being undertaken as part of the Draft EA process.

Again, thank you for your participation in the Chapter 343, Hawai'i Revised Statutes review process. A copy of your letter and this response will be included in the Draft EA. A copy of the Draft EA will be sent to your office for review and comment. In the meantime, if there are any questions or if additional information is required, please contact me at (808) 244-2015.

Very truly yours,

Gwendolyn Rivera

Gwendolyn Leialoha Cheney Rivera
Senior Associate

GLCR:yp
Attachment
cc: James Richardson, State of Hawai'i, Department of Hawaiian Home Lands (w/attachment)
Nancy McPherson, State of Hawai'i, Department of Hawaiian Home Lands (w/attachment)
Chad McDonald, Mitsunaga and Associates, Inc. (w/attachment)
Chris Ball, Mitsunaga and Associates, Inc. (w/attachment)
K:\DATA\MAI\DHHL Kapaakea EA 1900\Applications\EC\EC Response Letters\DLNR.res.doc

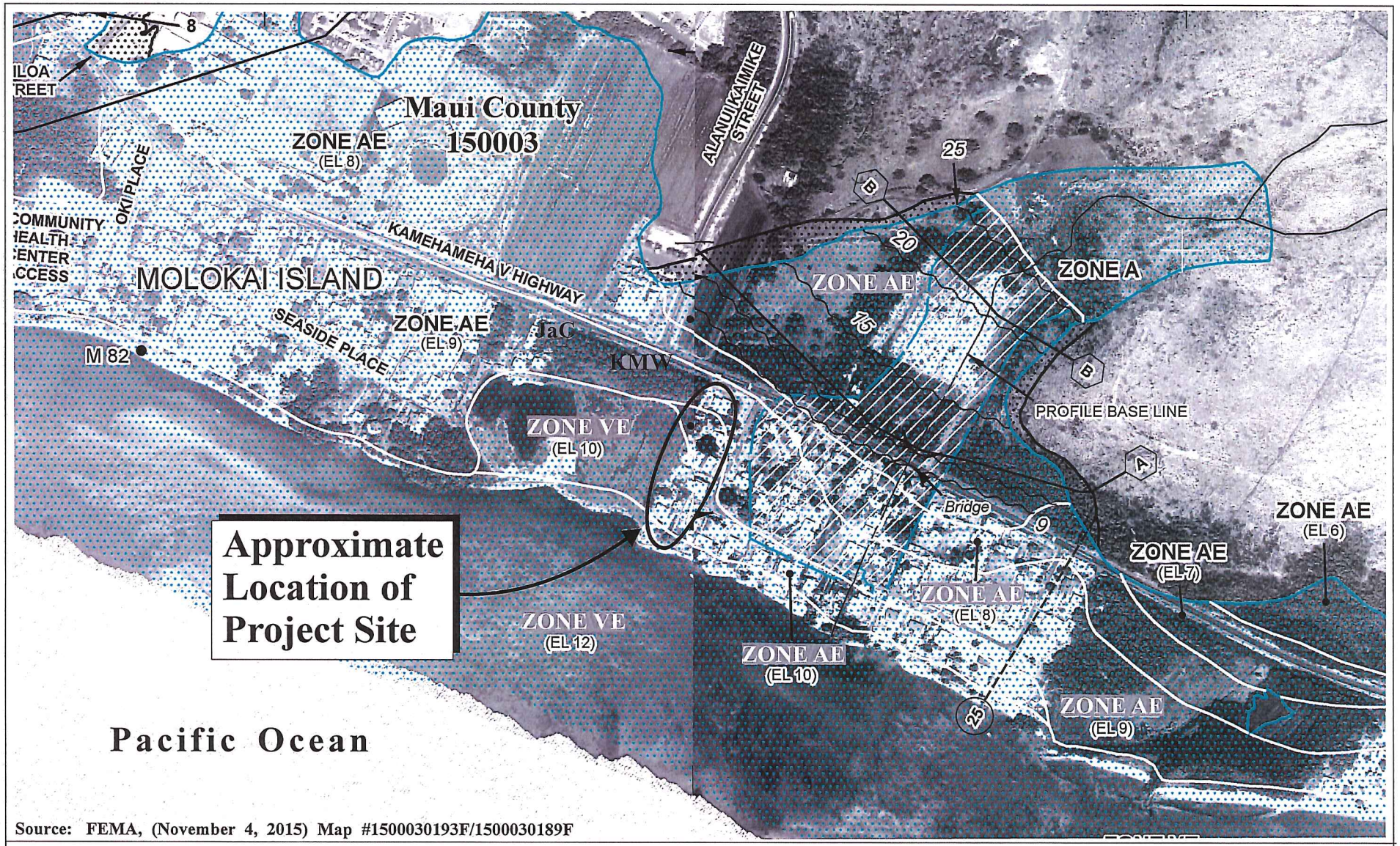


Source: FEMA, (November 4, 2015) Map #1500030193F/1500030189F

# Proposed Department of Hawaiian Home Lands
# Kapa'akea Flood Mitigation Improvements
## Flood Insurance Rate Map

0 250 125 500 Feet

Prepared for: State of Hawai'i, Department of Hawaiian Home Lands

MUNEKIYO HIRAGA



**EXHIBIT "1"**

MAI\DHHL Kapaakea EA 1900\Applications\Figures\FIRM.Exh

DAVID Y. IGE
GOVERNOR

JUN 13 2016

ARTHUR J. LOGAN
MAJOR GENERAL
ADJUTANT GENERAL

KENNETH S. HARA
BRIGADIER GENERAL
DEPUTY ADJUTANT GENERAL

STATE OF HAWAII
**DEPARTMENT OF DEFENSE**
**OFFICE OF THE ADJUTANT GENERAL**
3949 DIAMOND HEAD ROAD
HONOLULU, HAWAII 96816-4495

June 7, 2016

Munekiyo Hiraga, Inc.
305 High Street, Suite 104
Wailuku, Hawaii 96793

Attn.: Ms. Gwendolyn Rivera, Senior Associate

Subject: Early Consultation Request for Kapa'akea Flood Mitigation Project, Kaunakakai, Molokai; TMK: (2) 5-4-007: 009 (por.)(Parcel 9), (2) 5-4-007: 010 (por.)(Parcel 10), (2) 5-6-007: 011 (por.)(Parcel 11), (2) 5-4-007: 024 (por.)(Parcel 24), and (2) 5-4-007: 025 (por.)(Parcel 25)

Dear Ms. Rivera:

Thank you for the opportunity to comment on the above project, and please accept our apologies for this late response. The State of Hawaii Department of Defense has no comments to offer relative to the project.

Should you have any questions or concerns, please have your staff contact Mr. Lloyd Maki, Assistant Chief Engineering Officer at (808) 733-4250.

Sincerely,

ARTHUR J. LOGAN
Major General
Hawaii National Guard
Adjutant General

c: Ms. Havinne Okamura, Hawaii Emergency Management Agency

MAY 19 2016

DAVID Y. IGE
GOVERNOR

LEO R. ASUNCION
DIRECTOR
OFFICE OF PLANNING

# OFFICE OF PLANNING
# STATE OF HAWAII

235 South Beretania Street, 6th Floor, Honolulu, Hawaii 96813
Mailing Address: P.O. Box 2359, Honolulu, Hawaii 96804

Telephone: (808) 587-2846
Fax: (808) 587-2824
Web: http://planning.hawaii.gov/

Ref. No. P-15157

May 17, 2016

Ms. Gwendolyn Rivera
Senior Associate
Munekiyo Hiraga, Inc.
305 High Street, Suite 104
Wailuku, Hawaii 96793

Dear Ms. Rivera:

Subject: Early Consultation Request for Kapaakea Flood Mitigation Project, Kaunakakai, Molokai

Thank you for the opportunity to provide comments on this early consultation request for the Kapaakea flood mitigation project in Kaunakakai, Molokai. The pre-consultation review material was transmitted to our office via letter dated May 3, 2016.

It is our understanding that the Department of Hawaiian Home Lands (DHHL) is proposing flood mitigation measures for five parcels along the Kapaakea area of Kaunakakai. To protect residential homesteads, DHHL proposes to remove existing chain link fences, shrubbery, and previously established walls in the area, and intends to construct a new wall to control the periodic flooding due to runoff from heavy storm events.

The project calls for the construction of a new three-foot high concrete masonry unit (CMU) wall. The CMU wall and swale will transverse 800 feet along the five parcels and terminate 100 feet from the shoreline. This CMU structure will serve as a barrier to prevent stormwater flow from the nearby wetland to the homestead parcels. Additionally, it is expected that the CMU wall will divert runoff and prevent overflow along Kamehameha V Highway.

The Office of Planning (OP) has reviewed the transmitted material and has the following comments to offer:

1. Pursuant to the Hawaii Administrative Rules (HAR) § 11-200-10(4) – general description of the action's technical, economic, social, and environmental characteristics; this project must demonstrate that it is consistent with a number of State environmental, social policies, economic goals, and policies for land use. OP provides technical assistance to State and county agencies in administering the statewide planning system in Hawaii Revised Statutes (HRS) Chapter 226, the Hawaii State Plan. The Hawaii State Plan provides goals, objectives, policies, and priority

guidelines for growth, development, and the allocation of resources throughout the State in areas of state interest including but not limited to the economy, agriculture, the visitor industry, federal expenditure, the physical environment, facility systems, socio-cultural advancement, climate change adaptation, and sustainability.

The Draft Environmental Assessment (Draft EA) should include an analysis that addresses whether the proposed project conforms to or is in conflict with the goals, objectives, policies, and priority guidelines listed in the Hawaii State Plan.

2. The coastal zone management (CZM) area is defined as "all lands of the State and the area extending seaward from the shoreline to the limit of the State's police power and management authority, including the U.S. territorial sea" see HRS § 205A-1 (definition of "coastal zone management area").

   HRS § 205A-5(b) requires all State and county agencies to enforce the CZM objectives and policies. The Draft EA should include an assessment as to how the proposed project conforms to the CZM objectives and its supporting policies set forth in HRS § 205A-2. The assessment on compliance with HRS § 205A-2 is an important component for satisfying the requirements of HRS Chapter 343. These objectives and policies include recreational resources, historic resources, scenic and open space resources, coastal ecosystems, economic uses, coastal hazards, managing development, public participation, beach protection, and marine resources.

3. We note that the project lies within the Special Management Area (SMA) delineated by the County of Maui. However, as the review material states, this project is exempt from SMA permit requirements due to the project area falling under the jurisdiction of DHHL.

4. Pursuant to HAR § 11-200-10(6) – identification and summary of impacts and alternatives considered; the intent of the CMU flood control wall is to lessen the flooding risks caused by heavy storms events throughout these five parcels. In order to ensure that the coastline and water resources within the south shore of Molokai remain protected, the Draft EA should examine the cumulative effects on water quality resulting from the construction and presence of this CMU structure, as well as its ability to reduce sediment loss and erosion concerns within the project area and the adjacent marine environment.

   Kaunakakai is rural in nature, however it is an urbanized area with a network of

roadway storm drains and residential/commercial drainage infrastructure. During heavy storm events, the natural contours of the land and drainage infrastructure may transport upslope sediment, land-based pollutants, and toxicant-load contributions into nearby the nearshore environment of Molokai.

The Draft EA should examine potential benefits and/or negative impacts resulting from this project on coastal and marine resources. Issues that may be examined in the Draft EA include, but are not limited to, project site characteristics in relation to erosion controls on flood prone areas, undeveloped open spaces, and the absorption characteristics of the soil. Furthermore, it should differentiate between the existing permeable surfaces versus hardened surfaces in the area. These items, as well as the marine water quality classification, should be considered when developing mitigation measures to protect the coastal ecosystem.

Due to the limited information provided by the review material, it is unclear how the erection of this CMU structure will reduce flooding, aside from its presence as a physical barrier to flood waters. Rather than rely solely on this CMU barrier, we recommend that you consider further flood mitigation strategies. Proven storm runoff strategies that should be considered in the Draft EA include the reduction of impervious surfaces, diverting stormwater to vegetated areas or wetlands to take advantage of their natural filtration process, collecting runoff in bio-detention basins, or re-purposing this water for irrigation purposes.

OP has a number of resources available to assist in the development of projects which ensure sediment and stormwater control on land, thus protecting the nearshore environment. OP recommends consulting these guidance documents and stormwater evaluative tools when developing strategies to address polluted runoff. They offer useful techniques to keep land-based pollutants and sediment in place and prevent contaminating nearshore waters, while considering the practices best suited for this project. These three evaluative tools that should be used during the design process include:

- Hawaii Watershed Guidance provides direction on mitigation strategies in urban areas that will safeguard Hawaii's watersheds and implement watershed plans http://files.hawaii.gov/dbedt/op/czm/initiative/nonpoint/HI Watershed Guidance Final.pdf

- Stormwater Impact Assessments can be used to identify and evaluate information on hydrology, stressors, sensitivity of aquatic and riparian resources, and management measures to control runoff, as well as consider secondary and cumulative impacts to the area http://files.hawaii.gov/dbedt/op/czm/initiative/stomwater_imapct/final_stormwater_impact_assessments_guidance.pdf

- Low Impact Development (LID), A Practitioners Guide covers a range of structural best management practices (BMP's) for stormwater control management, roadway development, and urban layout that minimizes negative environmental impacts http://files.hawaii.gov/dbedt/op/czm/initiative/lid/lid_guide_2006.pdf

If you have any questions regarding this comment letter, please contact Josh Hekekia of our office at (808) 587-2845.

Sincerely,

Leo R. Asuncion
Director

MUNEKIYO HIRAGA
Planning. Project Management. Sustainable Solutions.

Michael T. Munekiyo
PRESIDENT
Karlynn K. Fukuda
EXECUTIVE VICE PRESIDENT
Mark Alexander Roy
VICE PRESIDENT
Tessa Munekiyo Ng
VICE PRESIDENT

July 22, 2016

Leo R. Asuncion, Director
Office of Planning
State of Hawaii
235 South Beretania Street, 6th Floor
Honolulu, Hawai'i 96813

SUBJECT: Early Consultation Letter Request for the Department of Hawaiian Home Lands Kapa'akea Flood Mitigation Project, Kaunakakai, Moloka'i (Ref. No. P-15157)

Dear Mr. Asuncion:

Thank you for your letter dated May 17, 2016 responding to our request for early consultation in preparation for a Draft Environmental Assessment (EA), for the proposed Kapa'akea Flood Mitigation Project. On behalf of the State of Hawai'i, Department of Hawaiian Home Lands (DHHL) we offer the following responses in the order of the comments in your letter.

***Comment No. 1***

*The Office of Planning (OP) has reviewed the transmitted material and has the following comments to offer:*

*Pursuant to the Hawaii Administrative Rules (HAR) § 11-200-10(4) - general description of the action's technical, economic, social, and environmental characteristics; this project must demonstrate that it is consistent with a number of State environmental, social policies, economic goals, and policies for land use. OP provides technical assistance to State and county agencies in administering the statewide planning system in Hawaii Revised Statutes (HRS) Chapter 226, the Hawaii State Plan. The Hawaii State Plan provides goals, objectives, policies, and priority guidelines for growth, development, and the allocation of resources throughout the State in areas of state interest including but not limited to the economy, agriculture, the visitor industry, federal expenditure, the physical environment, facility systems, socio-cultural advancement, climate change adaptation, and sustainability.*

*The Draft Environmental Assessment (Draft EA) should include an analysis that addresses whether the proposed project conforms to or is in conflict with the goals, objectives, policies, and priority guidelines listed in the Hawaii State Plan.*

***Response:*** The Draft EA includes a discussion that the proposed project conforms to the goals, objectives, policies and priority guidelines listed in the Hawai'i State Plan, Hawai'i Revised Statutes (HRS), Chapter 226 and pursuant to Hawai'i Administrative Rules, Section 11-200-10(4).

***Comment No. 2***

*The coastal zone management (CZM) area is defined as "all lands of the State and the area extending seaward from the shoreline to the limit of the State's police power and management authority, including the U.S. territorial sea" see HRS § 205A-1 (definition of "coastal zone management area").*

*HRS § 205A-5(b) requires all State and county agencies to enforce the CZM objectives and policies. The Draft EA should include an assessment as to how the proposed project conforms to the CZM objectives and its supporting policies set forth in HRS § 205A-2. The assessment on compliance with HRS § 205A-2 is an important component for satisfying the requirements of HRS Chapter 343. These objectives and policies include recreational resources, historic resources, scenic and open space resources, coastal ecosystems, economic uses, coastal hazards, managing development, public participation, beach protection, and marine resources.*

***Response:*** The Draft EA includes an assessment of the project conformance to HRS, Chapter 205A pertaining to the CZM objectives and policies.

***Comment No. 3***

*We note that the project lies within the Special Management Area (SMA) delineated by the County of Maui. However, as the review material states, this project is exempt from SMA permit requirements due to the project area falling under the jurisdiction of DHHL.*

***Response:*** As discussed in the Draft EA, the proposed project is not subject to the SMA permit requirements of the County of Maui as the project will be undertaken by DHHL on DHHL property.

***Comment No. 4***

*Pursuant to HAR § 11-200-10(6) - identification and summary of impacts and alternatives considered; the intent of the CMU flood control wall is to lessen the flooding risks caused by heavy storms events throughout these five parcels. In order to ensure that the coastline and water resources within the south shore of Molokai remain protected, the Draft EA should examine the cumulative effects on water quality resulting from the construction and presence of this CMU structure, as well as its ability to reduce sediment loss and erosion concerns within the project area and the adjacent marine environment.*

*Kaunakakai is rural in nature, however it is an urbanized area with a network of roadway storm drains and residential/commercial drainage infrastructure. During heavy storm events, the natural contours of the land and drainage infrastructure may transport upslope sediment, land-based pollutants, and toxicant-load contributions into nearby the nearshore environment of Molokai.*

*The Draft EA should examine potential benefits and/or negative impacts resulting from this project on coastal and marine resources. Issues that may be examined in the Draft EA include, but are not limited to, project site characteristics in relation to erosion controls on flood prone areas, undeveloped open spaces, and the absorption characteristics of the soil. Furthermore, it should differentiate between the existing permeable surfaces versus hardened surfaces in the area. These items, as well as the marine water quality classification, should be considered when developing mitigation measures to protect the coastal ecosystem.*

***Response:*** The nearest point of the proposed project is located approximately 60 feet away from the shoreline, and the terrain characteristic is nearly level on the coastal plain. The entire project area is an upland site with no aquatic resources that would qualify it as a Waters of the U.S. according to a wetland report prepared by Robert Hobdy for the project.

As discussed in the Draft EA the project includes Best Management Practices (BMPs) as the erosion control measures recommended by the County of Maui, "Rules Relating to Soil Erosion Standards and Guidelines" such as use of vegetative cover, proper control of fugitive dust; use of berms, sandbags, filter fences and catchments; and removing and disposing of accumulated silt on a routine basis. With project implementation, significant adverse impacts to the coastal and marine resources are not anticipated as project design directs flow to the wetlands prior to discharge into the ocean.

No grading or ground disturbance beyond the removal of the existing chainlink fence and stacked rubble wall and the installation of the new CMU wall and swale are associated with the proposed work. The limited work will not change the existing permeable and hardened surfaces in the project area.

***Comment No. 5***

*Due to the limited information provided by the review material, it is unclear how the erection of this CMU structure will reduce flooding, aside from its presence as a physical barrier to flood waters. Rather than rely solely on this CMU barrier, we recommend that you consider further flood mitigation strategies. Proven storm runoff strategies that should be considered in the Draft EA include the reduction of impervious surfaces, diverting stormwater to vegetated areas or wetlands to take advantage of their natural filtration process, collecting runoff in bio-detention basins, or re-purposing this water for irrigation purposes.*

***Response:*** The five (5) DHHL Homestead lots adjacent to the Kōheo Wetland were originally lower in elevation, and as such were prone to periodic temporary flooding during high rainfall events. Previously, fill material was brought in and spread on these lots to build up the surface elevations one (1) to two (2) feet to minimize flood damages. This resulted in a straight boundary line that slopes down into the wetland from the DHHL Homestead lots so that during heavy wet weather events, stormwater flows through the wetlands taking advantage of the natural filtration process and directs the flow away from the DHHL Homestead lots.

Earthen berms were considered as a flood mitigation alternative, however, the grading required more area and maintenance that would affect DHHL homesteaders. As discussed in the Draft EA, the proposed project is preferred as a flood mitigation measure as it incorporates the natural topography and takes advantage of the natural filtering process of the adjacent Kōheo Wetland. As previously noted, the project will not change the existing impervious and pervious surfaces on the project site as it is limited to the construction of a CMU wall and earth swale.

The proposed project includes the implementation of an Erosion Control Plan and BMPs during construction to mitigate impacts to surrounding properties. The project's contractor will be required to comply with State water quality standards.

Further flood mitigation strategies and measures are currently under consideration by DHHL for future action.

***Comment No. 6***

*OP has a number of resources available to assist in the development of projects which ensure sediment and stormwater control on land, thus protecting the nearshore environment. OP recommends consulting these guidance documents and stormwater evaluative tools when developing strategies to address polluted runoff. They offer useful techniques to keep land-based pollutants and sediment in place and prevent contaminating nearshore waters, while considering the practices best suited for this project. These three evaluative tools that should be used during the design process include:*

- *Hawaii Watershed Guidance provides direction on mitigation strategies in urban areas that will safeguard Hawaii's watersheds and implement watershed plans http://files.hawaii.gov/dbedt/op/czm/initiative/nonpoint/HI Watershed Guidance Final.pdf*

- *Stormwater Impact Assessments can be used to identify and evaluate information on hydrology, stressors, sensitivity of aquatic and riparian resources, and management measures to control runoff, as well as consider secondary and cumulative impacts to the area http://files.hawaii.gov/dbedt/op/czm/initiative/stomwater_imapct/final_storm water_impact·assessments_guidance.pdf*

- *Low Impact Development (LID), A Practitioners Guide covers a range of structural best management practices (BMP's) for stormwater control management, roadway development, and urban layout that minimizes negative environmental impacts http://files.hawaii.gov/dbedt/op/czm/initiative/lid/lidguide 2006.pdf*

***Response:*** As discussed in the Draft EA, stormwater runoff will be diverted to the Kōheo wetland area, west of the DHHL Homestead lots via a new swale. The project design takes advantage of the natural topography and filtration process provided by the wetland. As such, the proposed project is not expected to have a significant adverse impact on the existing marine resources in the long term.

To minimize the impact of off-site flow during construction, the following methods are being implemented for the project such as minimizing the amount of land exposed at any time; exposed areas that are not at final

grade and expected to be exposed more than 30 days shall be placed with a vegetative cover or be mulched; and removing temporary erosion controls after permanent erosion controls are in place and established. BMPs include proper control of fugitive dust from entering State waters; use of berms, filter fences and catchments; and removing and disposing of accumulated silt on a routine basis.

The Design Team will review the Hawaii Watershed Guidance, Stormwater Impact Assessments and Low Impact Development (LID), A Practitioners Guide for applicability and feasibility for project implementation.

Again, thank you for your participation in the Chapter 343, HRS review process. A copy of your comment letter and our response will be included in the Draft EA. A copy of the Draft EA will be sent to your office for review and comment. Should you have any questions or require further information regarding the proposed action, please contact me at (808) 244-2015.

Very truly yours,

Gwendolyn Leialoha Cheney Rivera
Senior Associate

GLCR:yp
cc: James Richardson, State of Hawai'i, Department of Hawaiian Home Lands
Nancy McPherson, State of Hawai'i, Department of Hawaiian Home Lands
Chad McDonald, Mitsunaga and Associates, Inc.
Chris Ball, Mitsunaga and Associates, Inc.
K:\DATA\MAI\DHHL Kapaakea EA 1900\Applications\EC\EC Response Letters\OP.res.doc

ALAN M. ARAKAWA
Mayor
STEWART STANT
Director
MICHAEL M. MIYAMOTO
Deputy Director

MAY 16 2016

MICHAEL RATTE
Solid Waste Division
ERIC NAKAGAWA, P.E.
Wastewater Reclamation Division

**COUNTY OF MAUI**
**DEPARTMENT OF**
**ENVIRONMENTAL MANAGEMENT**
2050 MAIN STREET, SUITE 2B
WAILUKU, MAUI, HAWAII 96793

May 11, 2016

Ms. Gwendolyn Rivera
Senior Associate
Munekiyo Hiraga, Inc.
305 High Street, Suite 104
Wailuku, Hawaii 96793

**SUBJECT: KAPA'AKEA FLOOD MITIGATION PROJECT**
**EARLY CONSULTATION REQUEST**
**TMK (2) 5-4-007:009 (POR.), 010 (POR.), 011 (POR.)**
**(2) 5-4-007:024 (POR.) & 025 (POR.), KAUNAKAKAI, MOLOKAI**

We reviewed the subject application and have the following comments:

1. Solid Waste Division comments:

   a. The contractor must apply to the Molokai Landfill to dispose of construction waste and obtain a project number. Information is available at www.mauicounty.gov or from the web with the inquiry, "Maui County C&D." Check with the Molokai Landfill metals facility for recycling the chain link fence and check with the Molokai Landfill greenwaste facility for recycling the shrubbery.

2. Wastewater Reclamation Division (WWRD) comments:

   a. The County does not have a wastewater system in the area of the subject project.

If you have any questions regarding this letter, please contact Michael Miyamoto at 270-8230.

Sincerely,

MICHAEL M. MIYAMOTO
Deputy Director of Environmental Management

MUNEKIYO HIRAGA
Planning. Project Management. Sustainable Solutions.

Michael T. Munekiyo
PRESIDENT
Karlynn K. Fukuda
EXECUTIVE VICE PRESIDENT
Mark Alexander Roy
VICE PRESIDENT
Tessa Munekiyo Ng
VICE PRESIDENT

July 22, 2016

Michael M. Miyamoto, Deputy Director
County of Maui
Department of Environmental Management
2050 Main Street, Suite 2B
Wailuku, Hawai'i 96793

SUBJECT: Early Consultation Letter Request for the Department of Hawaiian Home Lands Kapa'akea Flood Mitigation Project, Kaunakakai, Moloka'i

Dear Mr. Miyamoto:

Thank you for your letter of May 11, 2016, responding to our request for early consultation in preparation of a Draft Environmental Assessment (EA) for the proposed Kapa'akea Flood Mitigation Project. On behalf of the State of Hawai'i, Department of Hawaiian Home Lands (DHHL) we offer the following information in response to the comments in your message.

***Solid Waste Division Comments:***

*The contractor must apply to the Molokai Landfill to dispose of construction waste and obtain a project number. Information is available at www.mauicounty.gov or from the web with inquiry, "Maui County C&D". Check with the Molokai Landfill metals facility for recycling the chain link fence and check with the Molokai Landfill greenwaste facility for recycling the shrubbery.*

***Response:*** The contract documents will include requirements for the contractor to apply to the Molokai Landfill to dispose of construction waste and obtain a project number. DHHL will check with the Moloka'i Landfill metals facility and greenwaste facility regarding recycling of the chain link fence and shrubbery, respectively, and will encourage the contractor to recycle these materials, as feasible.

***Wastewater Reclamation Division (WWRD) Comments:***

*The county does not have a wastewater system in the area of the subject property.*

***Response:*** Thank you for your comment confirming that the County of Maui does not have a wastewater system in the area of the subject property.

Again, thank you for your participation in the Chapter 343, Hawai'i Revised Statutes review process. A copy of your letter and this response will be included in the Draft EA. A copy of the Draft EA will be sent to your office for review and comment. In the meantime, if there are any questions or if additional information is required, please contact me at 244-2015.

Very truly yours,

Gwendolyn Leialoha Cheney Rivera
Senior Associate

GLCR:yp
cc: James Richardson, State of Hawai'i, Department of Hawaiian Home Lands
Nancy McPherson, State of Hawai'i, Department of Hawaiian Home Lands
Chad McDonald, Mitsunaga and Associates, Inc.
Chris Ball, Mitsunaga and Associates, Inc.
K:\DATA\MAI\DHHL Kapaakea EA 1900\Applications\EC\EC Response Letters\DEM.res.doc

MAY 19 2016

ALAN M. ARAKAWA
MAYOR

JEFFREY A. MURRAY
FIRE CHIEF

ROBERT M. SHIMADA
DEPUTY FIRE CHIEF

**COUNTY OF MAUI**
DEPARTMENT OF FIRE AND PUBLIC SAFETY
FIRE PREVENTION BUREAU

313 MANEA PLACE . WAILUKU, HAWAII 96793
(808) 876-4690 . FAX (808) 244-1363

**May 13, 2016**

**Munekiyo Hiraga**
**Attn: Gwendolyn Rivera, Senior Associate**
**305 High Street Suite 104**
**Wailuku, HI 96793**

**Re: Kapa'akea Flood Mitigation Project**
**Kaunakakai, Molokai**

Dear Gwendolyn:

Thank you for the opportunity to comment on this subject. At this time, our office has no comment in regards to the proposed project.

If there are any questions or comments, please feel free to contact me at (808) 876-4693.

Sincerely,

Paul Haake

Paul Haake
Captain, Fire Prevention Bureau

MAY 13 2016

DEPARTMENT OF
**HOUSING AND HUMAN CONCERNS**
**HOUSING DIVISION**
COUNTY OF MAUI

ALAN M. ARAKAWA
Mayor
CAROL K. REIMANN
Director
JAN SHISHIDO
Deputy Director

35 LUNALILO STREET, SUITE 102 • WAILUKU, HAWAII 96793 • PHONE (808) 270-7351 • FAX (808) 270-6284

May 10, 2016

Ms. Gwendolyn Rivera
Senior Associate
Munekiyo Hiraga, Inc.
305 High Street, Suite 104
Wailuku, Hawaii 96793

Dear Ms. Rivera:

**Subject: Early Consultation Request for Kapa'akea Flood Mitigation Project, Kaunakakai, Molokai, Hawaii; TMKs (2) 5-4-007:009 (por.) (Parcel 9); (2) 5-4-007:010 (por.) (Parcel 10); (2) 5-4-007:011 (por.) (Parcel 11); (2) 5-4-007:024 (por.) (Parcel 24); (2) 5-4-007:025 (por.) (Parcel 25)**

The Department has reviewed the request for Early Consultation for the above subject project. Based on our review, we have determined that the subject project is not subject to Chapter 2.96, Maui County Code. At the present time, the Department has no additional comments to offer.

Please call Mr. Veranio Tongson Jr. of our Housing Division at (808) 270-1741 if you have any questions.

Sincerely,

BUDDY ALMEIDA
Housing Administrator

cc: Director of Housing and Human Concerns

ALAN M. ARAKAWA
Mayor

KA'ALA BUENCONSEJO
Director

BRIANNE L. SAVAGE
Deputy Director

(808) 270-7230
FAX (808) 270-7934

MAY 23 2016

# DEPARTMENT OF PARKS & RECREATION

700 Hali'a Nakoa Street, Unit 2, Wailuku, Hawaii 96793

May 17, 2016

Gwendolyn C. Rivera
Munekiyo & Hiraga, Inc.
305 High Street Suite 104
Wailuku, Hawaii 96793

Dear Ms. Rivera:

**SUBJECT: EARLY CONSULTATION REQUEST FOR KAPA'AKEA FLOOD MITIGATION PROJECT, KAUNAKAKAI, MOLOKA'I**

Thank you for the opportunity to review and comment on the proposed improvements to the Department of Hawaiian Home Lands Kapa'akea Flood Mitigation project. The Department has no comments to the proposed action, but would like to review the project as it develops. In accordance with the requirements of Chapter 343, Hawaii Revised Statutes (HRS) and Section 11-2-00-6, Hawaii Administrative Rules (HAR), please provide a copy of the Draft Environmental Assessment (EA).

Feel free to contact me or Robert Halvorson, Chief of Planning and Development, at 270-7931, should you have any questions.

Sincerely,

KA'ALA BUENCONSEJO
Director of Parks & Recreation

c: Robert Halvorson, Chief of Planning & Development

KB:RH:as

JUN 06 2016

# POLICE DEPARTMENT

COUNTY OF MAUI


**ALAN M. ARAKAWA**
MAYOR

OUR REFERENCE

YOUR REFERENCE

**55 MAHALANI STREET**
**WAILUKU, HAWAII 96793**
**(808) 244-6400**
**FAX (808) 244-6411**

**TIVOLI S. FAAUMU**
CHIEF OF POLICE

**DEAN M. RICKARD**
DEPUTY CHIEF OF POLICE


June 1, 2016

Ms. Gwendolyn Rivera
Senior Associate
Munekiyo and Hiraga, Inc.
305 High Street, Suite 104
Wailuku, Hawaii 96793

Dear Ms. Rivera:

SUBJECT: Early Consultation Request for Kapa'akea Flood Mitigation Project, Kaunakakai, Molokai

This is in response to your letter dated May 3, 2016, requesting comments on the above subject.

Please refer to the enclosed copy of the to/from submitted by Officer Sepulona Falealii of our Community Policing Program.

Thank you for giving us the opportunity to comment on this project.

Sincerely,

Assistant Victor K. Ramos
for: TIVOLI S. FAAUMU
Chief of Police

Enclosure

Victor K. Ramos
Assistant Chief

**TO:** TIVOLI FAAUMU, POLICE CHIEF, MAUI COUNTY POLICE DEPARTMENT

NO MAJOR ISSUES FORESEEN. OFC. FALEALII'S COMMENTS SHOULD BE ADDRESSED AS IS NORMAL FOR ANY CONSTRUCTION PROJECT. CAPT.

**VIA:** CHANNELS

**FROM:** SEPULONA FALEALII, PO III, MAUI POLICE DEPARTMENT, D-V

**SUBJECT:** EARLY CONSULTATION FOR KAPA'AKEA FLOOD MITIGATION PROJECT, KAUNAKAKAI, MOLOKA'I

**SYNOPSIS:**

On May 11, 2016 at about 1400 hours, I was assigned by Sergeant Erik LOSVAR to assess the above mentioned construction project.

Location: The Proposed Project will affect five (5) properties in Kapa'akea Hawaiian Home Lands on Molokai, Tax Map Keys (TMKs):
Parcel 9 (2) 5-4-007:009 (por.);
Parcel 10 (2) 5-4-007:010 (por.);
Parcel 11 (2) 5-4-007:011 (por.);
Parcel 24 (2) 5-4-007:024 (por.);
Parcel 25 (2) 5-4-007:025 (por.).

(Refer to 3 pages of TMKs with Figure 1-3, attached)

Owner: State of Hawai'i, Department of Hawaiian Home Lands

**ASSESSMENT:**

On May 12, 2016 at about 0905 hours, I met with Edward H. AYAU, Molokai District Supervisor of DHHL at his office and related that this proposed project will not affect any County Roads or State Highway closure. Further added the proposed project involves the removal and demolition of the existing chain link fence and new concrete masonry wall and swale. A new 3-foot high CMU fence wall is proposed for installation along the northern boundaries of five (5) DHHL homestead lots (parcels) identified above.

Related the improvements will serve as a barrier to prevent stormwater flow from the adjacent wetland onto the above mentioned lots during a storm event, and divert runoff from Kamehameha V Highway to the existing wetland adjacent to the mentioned homestead parcels.

That the proposed project will begin its construction sometime in August 2016, no exact date given.

**TRAFFIC:**

The construction locations appear to be a good distance from the roadways used by residents in the area so I do not foresee any major issues, however, proper precautions should be taken to address the ingress and egress of any construction materials or equipment onto public roadways.

**POLLUTION:**

Noise and dust pollution are usually the two main complaints made by the public in construction related situations. Therefore, it would be in the construction company's best interest to take the appropriate steps to minimize said issues.

**CONTACT PERSON:**

Edward H. AYAU, District Supervisor of DHHL, may be contacted for further information (808) 646-9015.

**DISPOSITION:**

Should all issues regarding traffic control and noise/dust pollution be addressed, I do not foresee any reason why the construction cannot proceed as planned.

Noted
05/17/16 @ 0932

**Submitted by:**

**Sepulona FALEALII E-12197**
**Police Officer III, D-V**
**05/13/2016 @ 0630 Hours.**

For review
SGT. E. LOSVAR 13615

MUNEKIYO HIRAGA
Planning. Project Management. Sustainable Solutions.

Michael T. Munekiyo
PRESIDENT
Karlynn K. Fukuda
EXECUTIVE VICE PRESIDENT
Mark Alexander Roy
VICE PRESIDENT
Tessa Munekiyo Ng
VICE PRESIDENT

July 22, 2016

Tivoli S. Faaumu
Chief of Police
County of Maui
Police Department
55 Mahalani Street
Wailuku, Hawai'i 96793

SUBJECT: Early Consultation Letter Request for the Department of Hawaiian Home Lands Kapa'akea Flood Mitigation Project, Kaunakakai, Moloka'i

Dear Chief Faaumu:

Thank you for your letter dated June 1, 2016, responding to our request for early consultation in preparation for a Draft Environmental Assessment (EA), for the proposed Kapa'akea Flood Mitigation Project. On behalf of the State of Hawai'i, Department of Hawaiian Home Lands (DHHL) we offer the following responses in the order of the comments in your letter.

***Comment No. 1***

***ASSESSMENT:***

*On May 12, 2016 at about 0905 hours, I met with Edward H. AYAU, Molokai District Supervisor of DHHL at his office and related that this proposed project will not affect any County Roads or State Highway closure. Further added the proposed project involves the removal and demolition of the existing chain link fence and new concrete masonry wall and swale. A new 3-foot high CMU fence wall is proposed for installation along the northern boundaries of five (5) DHHL homestead lots (parcels) identified above.*

*Related the improvements will serve as a barrier to prevent stormwater flow from the adjacent wetland onto the above mentioned lots during a storm event, and divert runoff from Kamehameha V Highway to the existing wetland adjacent to the mentioned homestead parcels.*

*That the proposed project will begin its construction sometime in August 2016,*

*no exact date given.*

***Response:*** We acknowledge your comment in regards to the meeting that Officer Sepulona Falealii of your Community Policing Program had with Edward H. Ayau, DHHL's Molokai District Supervisor and that the project will not affect any County Roads or State Highway closure.

***Comment No. 2***

***TRAFFIC:***

*The construction locations appear to be a good distance from the roadways used by residents in the area so I do not foresee any major issues, however, proper precautions should be taken to address the ingress and egress of any construction materials or equipment onto public roadways.*

***Response:*** The contractor will be instructed by DHHL to take proper precautions to address the ingress and egress of construction materials and/or equipment onto public roadways, in the event of such occurrences.

***Comment No. 3***

***POLLUTION:***

*Noise and dust pollution are usually the two main complaints made by the public in construction related situations. Therefore, it would be in the construction company's best interest to take the appropriate steps to minimize said issues.*

***Response:*** Construction will be limited to the hours of 8:00 a.m. to 4:00 p.m., Monday through Friday to mitigate adverse impacts from noise. Short-term impact noise will involve heavy vehicle and construction equipment. Construction duration is anticipated for approximately four (4) months. As may be required, a noise permit will be obtained from the State of Hawai'i, Department of Health prior to construction.

As discussed in the EA, Best Management Practices will be implemented during project construction to address dust, such as watering of exposed areas, and proper control of fugitive dust. The contractor will be required to follow said BMP plan.

Work on the project site is limited in scope as there will be no grading or

ground disturbance beyond the removal of the existing chainlink fence and stacked rubble wall and the installation of the new CMU wall and swale associated with the proposed work.

***Comment No. 4***

***CONTACT PERSON:***

*Edward H. AYAU, District Supervisor of DHHL, may be contacted for further information (808) 646-9015.*

***DISPOSITION:***

*Should all issues regarding traffic control and noise/dust pollution be addressed, I do not foresee any reason why the construction cannot proceed as planned.*

***Response:*** As noted in our comment above, measures to mitigate noise and dust pollution will be included in a BMP plan for the project. A traffic control plan will be included with project implementation and will be coordinated with the Police Department.

Again, thank you for your participation in the Chapter 343, Hawai'i Revised Statutes review process. A copy of your comment letter and our response will be include in the Draft EA. A copy of the Draft EA will be sent to your office for review and comment. Should you have any questions or require further information regarding the proposed action, please contact me at 244-2015.

Very truly yours,

Gwendolyn Leialoha Cheney Rivera
Senior Associate

GLCR:yp
cc: James Richardson, State of Hawai'i, Department of Hawaiian Home Lands
Nancy McPherson, State of Hawai'i, Department of Hawaiian Home Lands
Chad McDonald, Mitsunaga and Associates, Inc.
Chris Ball, Mitsunaga and Associates, Inc.
K:\DATA\MAI\DHHL Kapaakea EA 1900\Applications\EC\EC Response Letters\OP.res.doc

ALAN M. ARAKAWA
Mayor

DAVID C. GOODE
Director

ROWENA M. DAGDAG-ANDAYA
Deputy Director

Telephone: (808) 270-7845
Fax: (808) 270-7955




COUNTY OF MAUI
**DEPARTMENT OF PUBLIC WORKS**
200 SOUTH HIGH STREET, ROOM NO. 434
WAILUKU, MAUI, HAWAII 96793

JUN 06 2016

GLEN A. UENO, P.E., P.L.S.
Development Services Administration

CARY YAMASHITA, P.E.
Engineering Division

LESLI L. OTANI, P.E., L.S.
Highways Division

June 2, 2016

Ms. Gwendolyn Rivera, Senior Associate
MUNEKIYO HIRAGA
305 High Street, Suite 104
Wailuku, Maui, Hawaii 96793

Dear Ms. Rivera:

**SUBJECT: EARLY CONSULTATION REQUEST FOR KAPA'AKEA FLOOD MITIGATION; TMK: 5-4-007 (POR.) 009, 010, 011, 024, 025**

We reviewed your early consultation request and have no comments at this time.

If you have any questions regarding this memorandum, please call Rowena Dagdag-Andaya at 270-7845.

Sincerely,

for DAVID C. GOODE
Director of Public Works

DCG:RMDA:da
xc: Engineering Division
S:\DSA\Engr\CZM\Draft Comments\54007009-011_024_025_kapaakea_fld_mitgn_ec.wpd

MAY 13 2016

ALAN M. ARAKAWA
Mayor

DON MEDEIROS
Director

MARC I. TAKAMORI
Deputy Director

(808) 270-7511

# DEPARTMENT OF TRANSPORTATION

COUNTY OF MAUI
2145 Kaohu Street, Suite 102
Wailuku, Hawaii, USA 96793

May 10, 2016

Ms. Gwendolyn Rivera
Munekiyo & Hiraga
305 High Street
Suite 104
Wailuku, Hawaii 96793

Subject: Proposed Kapa'akea Flood Mitigation Project, Moloka'i

Dear Ms. Rivera,

Thank you for the opportunity to comment on this project. We have no comments to make regarding this project at this time.

Please feel free to contact me if you have any questions.

Sincerely,

Don Medeiros
Director

JUN 0 2 2016

ALAN M. ARAKAWA
Mayor

DAVID TAYLOR, P.E.
Director

PAUL J. MEYER
Deputy Director

**DEPARTMENT OF WATER SUPPLY**
**COUNTY OF MAUI**
200 SOUTH HIGH STREET
WAILUKU, MAUI, HAWAII 96793-2155
www.mauiwater.org

May 22, 2016

Munekiyo Hiraga, Inc.
Ms. Gwendolyn C. Rivera, Senior Associate
305 High St., Ste 104
Wailuku, Hawaii 96793

Re: Kapa'akea Flood Mitigation Project Early Consultation Request
TMKs: (2) 5-4-007:009 (por.); :010 (por.); :011 (por.); :024 (por.); and :025 (por.).

Dear Ms. Rivera:

Thank you for the opportunity to comment on the early consultation request for this project. The Department of Hawaiian Home Lands is proposing the construction of a concrete masonry unit wall in response to flooding conditions due to heavy rainfall. This proposal will not negatively impact the Department of Water Supply's (DWS) water system on Moloka`i.

**Pollution Prevention**

Best Management Practices (BMPs) protect groundwater resources and should be noted in the Draft Environmental Assessment (DEA) and implemented during construction. The mitigation measures below will alleviate adverse impacts on water quality during construction:

- Prevent cement products, oil, fuel and other toxic substances from leaching into the water.
- Properly and promptly dispose of all loosened and excavated soil and debris material from drainage structure work.
- Retain ground cover until the last possible date.
- Stabilize denuded areas by sodding or planting as soon as possible. Replanting should include soil amendments and temporary irrigation. Use high seeding rates to ensure rapid stand establishment.
- Avoid fertilizers and biocides, or apply only during periods of low rainfall to minimize chemical run-off.
- Keep run-off on site.

Should you have any questions, please contact Staff Planner Marti Buckner at 463-3104 or marti.buckner@mauicounty.gov.

Sincerely,

David Taylor, P.E. Director
mlb
cc: engineering division

MUNEKIYO HIRAGA
Planning. Project Management. Sustainable Solutions.

Michael T. Munekiyo
PRESIDENT
Karlynn K. Fukuda
EXECUTIVE VICE PRESIDENT
Mark Alexander Roy
VICE PRESIDENT
Tessa Munekiyo Ng
VICE PRESIDENT

July 22, 2016

David Taylor, P.E., Director
County of Maui
Department of Water Supply
200 South High Street
Wailuku, Hawai'i 96793

SUBJECT: Early Consultation Letter Request for the Department of Hawaiian Home Lands Kapa'akea Flood Mitigation Project, Kaunakakai, Moloka'i

Dear Mr. Taylor:

Thank you for your letter of May 22, 2016, responding to our request for early consultation in preparation of a Draft Environmental Assessment (EA) for the proposed Kapa'akea Flood Mitigation Project. On behalf of the State of Hawai'i, Department of Hawaiian Home Lands (DHHL) we offer the following information in response to your comments.

***Comments***

*Best Management Practices (BMPs) protect groundwater resources and should be noted in the Draft Environmental Assessment (DEA) and implemented during construction. The mitigation measures below will alleviate adverse impacts on water quality during construction:*

- *Prevent cement products, oil, fuel, and other toxic substances from leaching into the water.*
- *Properly and promptly dispose of all loosened and excavated soil and debris material from drainage structure work.*
- *Stabilize denuded areas by sodding or planting as soon as possible. Replanting should include soil amendments and temporary irrigation. Use high seeding rates to ensure rapid stand establishment.*
- *Avoid fertilizers and biocides, or apply only during period of low rainfall to minimize chemical run-off.*
- *Keep run-off on site.*

***Response:*** BMPs are addressed in the Draft EA and will be implemented during construction of the proposed project. BMPs include such practices as installation of silt fencing and catchments, use of berms and sandbags, proper control of fugitive dust, removal and disposal of accumulated silt on a routine basis, as well as installation of absorption material areas for construction vehicles to mitigate construction-related pollutant discharge. Per the project's civil engineering consultant, plans call for any disturbed areas within the project site to be grassed to reduce erosion and sediment runoff. Plans also include minimizing the amount of land exposed at any time, and exposed areas that are not at final grade and expected to be exposed more than 30 days shall be placed with vegetative cover or mulched. No significant impacts to water quality are anticipated with project implementation.

Again, thank you for your participation in the Chapter 343, Hawai'i Revised Statutes review process. A copy of your letter and this response will be included in the Draft EA. A copy of the Draft EA will be sent to your office for review and comment. In the meantime, if there are any questions or if additional information is required, please contact me at 244-2015.

Very truly yours,

Gwendolyn Rivera

Gwendolyn Leialoha Cheney Rivera
Senior Associate

GLCR:yp
cc: James Richardson, State of Hawai'i, Department of Hawaiian Home Lands
Nancy McPherson, State of Hawai'i, Department of Hawaiian Home Lands
Chad McDonald, Mitsunaga and Associates, Inc.
Chris Ball, Mitsunaga and Associates, Inc.
K:\DATA\MAI\DHHL Kapaakea EA 1900\Applications\EC\EC Response Letters\DWS.doc

# X. REFERENCES

# X. REFERENCES


Chinen, Jon, The Great Mahele: Hawai'i's Land Division of 1848, Honolulu: University of Hawai'i P, 1958.

County of Maui, Civil Defense Agency, Tsunami Evacuation Maps, Retrieved from "www.co.maui.hi.us/261Tsunami-Evacuation Maps (2016).

County of Maui, Department of Planning, Rules on the Moloka'i Planning Commission Relating to the Shoreline Area of the Island of Moloka'i, (1991).

County of Maui, Department of Planning, Special Management Area Rules of the Moloka'i Planning Commission, (1994).

County of Maui, Department of Planning (2006) Socio-Economic Forecast: The Economic Projections for Maui County General Plan 2030. Wailuku, Hawai'i. Retrieved from http://www.co.maui.hi.us/index.aspx?WID=1489http://www.co.maui.hi.us/index.aspxWID=1489 on October 2011.

County of Maui, (2010 March 24) "County of Maui 2030 General Plan Countywide Policy Plan". Retrieved from http://www.co.maui.hi.us/index.aspx?NID=420.

County of Maui, Department of Planning (2001) Moloka'i Community Plan. Retrieved from http://www.co.maui.hi.us/index.aspx?NID=423 on December 2011.

County of Maui, Office of Economic Development, Maui County Data Book, 2014.

County of Maui, "Island of Maui TMK Parcels", [GIS Polygon Shapefile]. Created by Geographic Decision Systems International and County of Maui. (2010) Retrieved from http://Hawai'i.gov/dbedt/gis/download.htm on December 2011.

Davis, B.D., 1977 Cultural Reconnaissance Report Kapa'akea Homestead Flood Control Project, Kapa'akea, Moloka'i Island, Hawai'i. Archaeological Research Center Hawai'i, Inc., Honolulu.

De Loach, Lucile, Land and People on Moloka'i: An Overview, Master's Thesis, 1975.

Dye, T.S. and E.H.R. Jourdane, 2006 Archaeological Assessment for the Proposed Verizon Wireless H12 Kaunakakai Cell Site VZW No. 2004005296, Moloka'i Education Center, 375 Kamehameha V Highway, Kaunakakai, Kona District, Moloka'i, Hawai'i (TMK 5-3-03:014). Prepared for Clayton Group Services. T.S. Dye Colleagues, Inc., Honolulu.

Federal Emergency Management Agency, Flood Insurance Rate Map Community Panel 1500030193F and 1500030189F, November 4, 2015.

Land Study Bureau, University of Hawai'i, "Land Study Bureau (LSB) Detailed Land Classification", May 1967.

Mackenzie, Melody Kapiliaoloha, ed., Native Hawaiian Rights Handbook, Honolulu: Native Hawaiian Legal Corporation, 1991.

McGerty, L. and R.L.Spear, 2006 An Archaeological Assessment Report for an Approximately 5-Acre Parcel in Kaunakakai Ahupua'a, Moloka'i, Hawai'i. Scientific Consultant Services, Wailuku, Hawai'i.

Minerbi, Luciano et. al., Native Hawaiian and Local Cultural Assessment Project, Honolulu: University of Hawai'i at Manoa, 1993.

Perzinski, D. and M. Dega, 2011 An Archaeological Monitoring Report for DHHL Kapa'akea On-Site Drainage Improvements, Kapa'akea Ahupua'a, Kona District Moloka'i Island, Hawai'i. Scientific Consultant Services, Inc., Honolulu.

Spitz, A, 1964 Land Aspects of the Hawaiian Homes Program. Report No. 1b. Legislative Reference Bureau.

State of Hawai'i, Department of Hawaiian Home Lands, Moloka'i Island Plan, 2005.

State of Hawai'i, Department of Education, Public and Charter School Enrollment 2014/2015 http://doe.k12.hi.us/reports/enrollment.htm on October 2014.

State of Hawai'i, Department of Labor and Industrial Relations. (2016). Local Area Unemployment Statistics [data file]. Retrieved from http://www.labor.Hawai'i.gov/blog/news/Hawai'is-unemployment-rates-drops-to-3-1-in-march on April 20, 2016.

State of Hawai'i, Office of Planning, Coastal Zone Management Program, Low Impact Development, A Practioner's Guide, June 2006.

State of Hawai'i, Office of Planning, Coastal Zone Management Program, Stormwater Impact Assessments, May 2013.

State of Hawai'i, Hawai'i State Planning Act, Chapter 226, Hawai'i Revised Statutes.

Summers, C.C., 1971 Moloka'i, A Site Survey. Pacific Anthropological Records No. 14. Department of Anthropology, Bernice P. Bishop Museum, Honolulu.

U.S. Army Corps of Engineers, Final Environmental Statement, Flood Control Project, Kapaakea, Moloka'i, Hawai'i (1976).

U.S. Census Bureau, "Census 2010 Redistricting Data, Detailed Tables, Table H-1, Maui County and Maui Block Groups", retrieved from http://factfinder2.census.gov/main.html on October 2011.

United States Department of Agriculture, Soil Conservation Service, Soil Survey of the Islands of Kauai, Oahu, Maui, Molokai & Lanai, August 1972.

Wiesler, Marshall and P.V Kirch, 1982. The Archaeological Resources of Kawela, Moloka'i: their nature, significance and management.

Wilson Okamoto & Associates, Inc., Final Environmental Assessment for the Proposed Kaunakakai Town Drainage Improvements, January 1995.

# APPENDIX A.

# Engineering Report

# KAPAAKEA FLOOD MITIGATION IMPROVEMENTS, ENGINEERING REPORT

Kaunakakai, Molokai, Hawaii
Job Number: PS-14-LDD-008
TMK: (2) 5-4-007: 009, 010, 011, 024 & 025

February 2016

PREPARED FOR:

State of Hawaii
Department of Hawaiian Home Lands
91-5420 Kapolei Parkway
Kapolei, Hawaii 96707

MITSUNAGA & ASSOCIATES, INC.

747 Amana Street, Suite 216
Honolulu, Hawaii 96814
(808) 945-7882 • Fax: (808) 946-2563

TABLE OF CONTENTS

BASIS OF DESIGN

A. PROJECT SITE ..... 1

B. GRADING AND DRAINAGE ..... 2

C. ENVIRONMENTAL PERMITS ..... 2

D. REFERENCES ..... 3

APPENDIXES

A. SMA CORRESPONDENCE

B. DRAINAGE REPORT

C. COST ESTIMATE

100% Basis of Design

A. Project Site

The Kapaakea Flood Mitigation Improvements project will be located within five (5) Department of Hawaiian Home Lands (DHHL) parcels on the island of Molokai (TMK: (2) 5-4-007: 009, 010, 011, 024 & 025). The properties are situated along Kamehameha V Highway and Kapaakea Loop. The proposed concrete masonry unit (CMU) wall has a project area of 0.17 acres at the edge of each property. The proposed project is owned and maintained by DHHL, State of Hawaii.

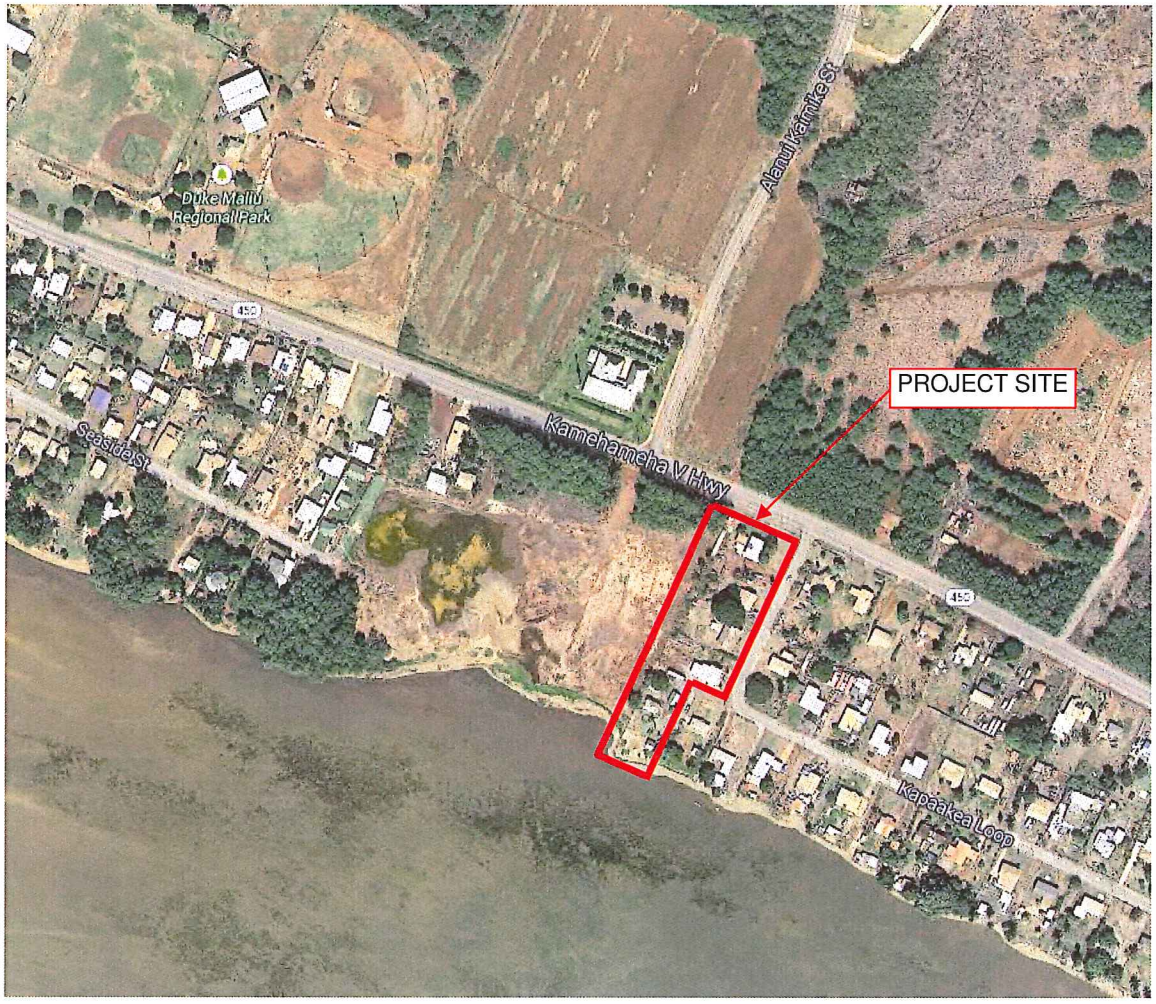

B. Grading and Drainage

The grading of the site will be in conformance with the County of Maui Grading Ordinance. On-site fill will be used wherever necessary, fill slopes will not exceed 10:1. Erosion and dust control will adhere to the Erosion Control Plan provided by the engineer and approved by the County of Maui.

The project storm drainage system will be designed to comply with the latest County of Maui *Rules for the Design of Storm Drainage Facilities in the County of Maui.* The on-site three foot (3') high CMU wall will be designed help mitigate the flood affects of the adjacent residential parcels. The wall will run north to south along the bordering properties and along a portion of the Kamehameha V Highway.

The project site is located in zone AE (varies between elev. 9-10) and VE (elev. 10) – Base Flood Elevations determined: Floodway as determined by the Federal Emergency Management Agency (FIRM Maps FM1500030189F & FM1500030193F, dated November 4, 2015).

C. Environmental Permits and Controls

1. SMA PERMIT

This project was previously considered to prompt a Special Management Area (SMA) minor permit due to the location in the SMA zone and a project valuation of less than $500,000. Through correspondence with Maui County, Planning Department (Appendix A), this project no longer requires a SMA permit because this project will be carried out by DHHL. Therefore, the County does not have jurisdiction for the SMA.

2. Applicable Regulations

In order to provide for abatement and control of environmental pollution arising from the construction activities of the Contractor and his subcontractors in the performance of this contract, the work performed will be required to comply with the intent of the applicable Federal, State, and local laws and regulations concerning environmental pollution control and abatement, including, but not limited to the following regulations:

a. State of Hawaii, Department of Health, Administrative Rules, Chapter 55, WATER POLLUTION CONTROL: Chapter 54, WATER QUALITY STANDARDS.

3. Best Management Practices Plan (BMP)

A BMP will be included, implemented and consist of, but not be limited to, the application of the following mitigation and/or corrective measures by the Contractor:

a. Properly controlling fugitive dust from entering State waters.

b. Wash-out of concrete trucks will be done in such a way (preferably off-site) as to ensure that neither wastewater nor surplus concrete enters State Waters.

c. Construction of berms, sandbags, filter fences, catchments, etc., as needed to contain/filter storm water runoff.

d. If during construction, water quality parameters exceed respective State standards, all construction activities that were identified as contributing to water quality degradation shall be stopped immediately. The causes shall be established, and if related to construction activity, remedial action for the non-compliance should be taken to fix the problem prior to commencing work.

D. References:

1. *Rules For The Design Of Storm Drainage Facilities In The County Of Maui.* Department of Public Works and Waste Management, County of Maui, November 1995.

2. *Code of the County of Maui.* Department of Planning and Permitting, County of Maui, 1980.

3. *Civil Engineering Reference Manual, Twelfth Edition.* Michael R. Lindeburg, PE. CA, 2011.

# APPENDIX A

# SMA CORRESPONDENCE

## Steven Doo

**From:** Cheryl Okuma [Cheryl@munekiyohiraga.com]
**Sent:** Wednesday, July 22, 2015 12:39 PM
**To:** Steven Doo
**Cc:** Karlynn Fukuda
**Subject:** FW: Request To Meet (Molokai Flood Mitigation Project)
**Attachments:** ATT00002.png; ATT00003.png; ATT00004.png; image001.png

Steven,

We just received the determination from the Planning Department (Jeff Dack) – see email below.

Please let us know if you have questions, or wish to discuss. Thank you.....

**Cheryl K. Okuma**, Senior Associate
Email: cheryl@munekiyohiraga.com

Maui: 305 High Street, Suite 104, Wailuku, Hawaii 96793 T: 808.244.2015 F: 808.244.8729
Oahu: 735 Bishop Street, Suite 238, Honolulu, Hawaii 96813 T: 808.983.1233
Planning. Project Management. Sustainable Solutions. www.munekiyohiraga.com

CONFIDENTIAL AND PRIVILEGED COMMUNICATION: This message (including attachments) is intended for the use of the designated recipient(s) named above. The contents of this correspondence are considered privileged and confidential. If you have received this message in error, kindly notify us immediately by email or telephone, and delete this email from your computer system. Thank you.

**From:** Jeffrey Dack [mailto:Jeffrey.Dack@co.maui.hi.us]
**Sent:** Wednesday, July 22, 2015 12:33 PM
**To:** Cheryl Okuma; Karlynn Fukuda
**Cc:** Sybil Lopez
**Subject:** RE: Request To Meet (Molokai Flood Mitigation Project)

Cheryl and Karlynn,

I checked with Clayton after our meeting on Monday. If the project is to be carried out by DHHL we would not consider the County to have jurisdiction for the SMA. If instead the project is to be carried out by a lessee of DHHL we WOULD consider the County of have jurisdiction for the SMA. I hope this helps.

Thanks,

Jeff Dack

>>> Cheryl Okuma <Cheryl@munekiyohiraga.com> 7/6/2015 12:33 PM >>>
Ok, thank you ---

**Cheryl K. Okuma**, Senior Associate
Email: cheryl@munekiyohiraga.com

Maui: 305 High Street, Suite 104, Wailuku, Hawaii 96793 T: 808.244.2015 F: 808.244.8729
Oahu: 735 Bishop Street, Suite 238, Honolulu, Hawaii 96813 T: 808.983.1233
Planning. Project Management. Sustainable Solutions. www.munekiyohiraga.com

CONFIDENTIAL AND PRIVILEGED COMMUNICATION: This message (including attachments) is intended for the use of the designated recipient(s) named above. The contents of this correspondence are considered privileged and confidential. If you have received this message in error, kindly notify us immediately by email or telephone, and delete this email from your computer system. Thank you.

**From:** Ann Cua [mailto:Ann.Cua@co.maui.hi.us]
**Sent:** Monday, July 06, 2015 9:43 AM
**To:** Cheryl Okuma; Sybil Lopez
**Cc:** Jeffrey Dack; Karlynn Fukuda
**Subject:** RE: Request To Meet (Molokai Flood Mitigation Project)

Since Jeffrey will be attending, I will not need to attend. Ann

>>> Cheryl Okuma <Cheryl@munekiyohiraga.com> 7/6/2015 9:03 AM >>>
Hi Sybil - thank you, we will see you folks Monday, July 20 @ 9:30 a.m. at your conference room.

**Cheryl K. Okuma**, Senior Associate
Email: cheryl@munekiyohiraga.com

Maui: 305 High Street, Suite 104, Wailuku, Hawaii 96793 T: 808.244.2015 F: 808.244.8729
Oahu: 735 Bishop Street, Suite 238, Honolulu, Hawaii 96813 T: 808.983.1233
Planning. Project Management. Sustainable Solutions. www.munekiyohiraga.com

CONFIDENTIAL AND PRIVILEGED COMMUNICATION: This message (including attachments) is intended for the use of the designated recipient(s) named above. The contents of this correspondence are considered privileged and confidential. If you have received this message in error, kindly notify us immediately by email or telephone, and delete this email from your computer system. Thank you.

**From:** Sybil Lopez [mailto:Sybil.Lopez@co.maui.hi.us]
**Sent:** Monday, July 06, 2015 8:31 AM
**To:** Cheryl Okuma
**Cc:** Ann Cua; Jeffrey Dack
**Subject:** RE: Request To Meet (Molokai Flood Mitigation Project)

Aloha Cheryl;

Yes, we can plan for July 20 at 9:30am.
Once confirmed, I will book the conference room for then.

Mahalo;

Sybil

*Sybil K Lopez*
Molokai Planner
County of Maui
Department of Planning-Current Division
Telephone: (808) 270-5529
Office: (808) 270-8205
Cell: (808) 866-8389
Fax: (808) 270-1775
E-mail: sybil.lopez@co.maui.hi.us

>>> Cheryl Okuma <Cheryl@munekiyohiraga.com> 7/6/2015 7:22 AM >>>
Can we see if we can meet Monday, July 20 at 9:30 a.m. at your office? Seems that works for Jeff and Ann-Sybil, does this work for you?

The State of Hawaii, Department of Hawaiian Home Lands proposes a flood mitigation project in Kaunakakai, which involves five (5) Hawaiian Homestead lots in the vicinity of Kapaakea Loop Road. The Tax Map Keys are as follows:

TMK (2)5-4-007:009
(2)5-4-007:010
(2)5-4-007:011
(2)5-4-007:024
(2)5-4-007:025

The proposed work involves removal of the existing fence/wall on the properties and replacing with a new fence wall.

**Cheryl K. Okuma**, Senior Associate
**Email:** cheryl@munekiyohiraga.com

**Maui:** 305 High Street, Suite 104, Wailuku, Hawaii 96793 **T:** 808.244.2015 **F:** 808.244.8729
**Oahu:** 735 Bishop Street, Suite 238, Honolulu, Hawaii 96813 **T:** 808.983.1233
Planning. Project Management. Sustainable Solutions. www.munekiyohiraga.com

CONFIDENTIAL AND PRIVILEGED COMMUNICATION: This message (including attachments) is intended for the use of the designated recipient(s) named above. The contents of this correspondence are considered privileged and confidential. If you have received this message in error, kindly notify us immediately by email or telephone, and delete this email from your computer system. Thank you.

**From:** Jeffrey Dack [mailto:Jeffrey.Dack@co.maui.hi.us]
**Sent:** Friday, July 03, 2015 8:37 PM
**To:** Cheryl Okuma
**Cc:** Ann Cua; Clayton Yoshida; Sybil Lopez
**Subject:** RE: Request To Meet (Molokai Flood Mitigation Project)

I am available Monday, July 20 (anytime btwn 9:30 to 10:30), and
Tuesday, July 21 (anytime between 8:30 to 2:00)

If we do no yet have any basic written project scope and plans could you please email those before the meeting so we may be better prepared?

Thanks,

Jeff Dack

>>> Cheryl Okuma <Cheryl@munekiyohiraga.com> 7/2/2015 3:55 PM >>>
Ok, thank you --

**Cheryl K. Okuma**, Senior Associate
**Email:** cheryl@munekiyohiraga.com

**Maui:** 305 High Street, Suite 104, Wailuku, Hawaii 96793 **T:** 808.244.2015 **F:** 808.244.8729
**Oahu:** 735 Bishop Street, Suite 238, Honolulu, Hawaii 96813 **T:** 808.983.1233
Planning. Project Management. Sustainable Solutions. www.munekiyohiraga.com

CONFIDENTIAL AND PRIVILEGED COMMUNICATION: This message (including attachments) is intended for the use of the designated recipient(s) named above. The contents of this correspondence are considered privileged and confidential. If you have received this message in error, kindly notify us immediately by email or telephone, and delete this email from your computer system. Thank you.

**From:** Ann Cua [mailto:Ann.Cua@co.maui.hi.us]
**Sent:** Thursday, July 02, 2015 3:59 PM
**To:** Cheryl Okuma; Sybil Lopez

**Cc:** Clayton Yoshida; Jeffrey Dack
**Subject:** RE: Request To Meet (Molokai Flood Mitigation Project)

As Jeff Dack is Sybil's supervisor I will cc him about this meeting. If Jeffrey cannot attend I will attend with Sybil and Clayton
I am only not free on Monday JUly 20 from 10:30 until noon and on Tuesday July 21 from 1-230

>>> Cheryl Okuma <Cheryl@munekiyohiraga.com> 7/2/2015 3:42 PM >>>
Would you folks be available during any of the following days/time?

Monday, July 20 (anytime btwn 9:30 to 1:00)
Tuesday, July 21 ( anytime between 8:30 to 2:00)

**Cheryl K. Okuma**, Senior Associate
Email: cheryl@munekiyohiraga.com

Maui: 305 High Street, Suite 104, Wailuku, Hawaii 96793 T: 808.244.2015 F: 808.244.8729
Oahu: 735 Bishop Street, Suite 238, Honolulu, Hawaii 96813 T: 808.983.1233
Planning. Project Management. Sustainable Solutions. www.munekiyohiraga.com

CONFIDENTIAL AND PRIVILEGED COMMUNICATION: This message (including attachments) is intended for the use of the designated recipient(s) named above. The contents of this correspondence are considered privileged and confidential. If you have received this message in error, kindly notify us immediately by email or telephone, and delete this email from your computer system. Thank you.

# APPENDIX B

# DRAINAGE REPORT

# KAPAAKEA FLOOD MITIGATION IMPROVEMENTS
# DRAINAGE REPORT

Kaunakakai, Molokai
Job Number: PS-14-LDD-008
TMK: (2) 5-4-007:009,010,011,024 & 025

Prepared for:

STATE OF HAWAII
Department of Hawaiian Home Lands
91-5420 Kapolei Parkway
Kapolei, Hawaii 96707

Prepared by:

Mitsunaga & Associates, Inc.
747 Amana Street, Suite 216
Honolulu, HI 96814




This work was prepared by
me or under my supervision.

Signature

4/30/16
Expiration date of License

February 2016

## TABLE OF CONTENTS


1.0 SUMMARY ..... 1
1.1 Background Information ..... 1
1.2 Project Description ..... 1
1.3 Drainage Summary ..... 1

2.0 HYDROLOGY ..... 4

3.0 DESIGN CRITERIA ..... 6
3.1 On-site ..... 6
3.2 Off-site ..... 7

4.0 CONCLUSION ..... 10

5.0 REFERENCES ..... 10


## LIST OF FIGURES


Figure 1 - Project Location ..... 2
Figure 2 - FEMA Flood Maps (FM1500030189F & FM1500030193F) ..... 3
Figure 3 – Mauka Property Owners ..... 5


## LIST OF TABLES


Table 1 – On-site Drainage Runoff ..... 6
Table 2 – Off-site Floodway Data ..... 7
Table 3 – Summary of Discharges ..... 8
Table 4 – Flood Profiles, Kamiloloa Gulch ..... 9


## LIST OF APPENDICES


Appendix 1 – Existing & Proposed Drainage Map ..... 11
Appendix 2 – Flow Calculations ..... 12-13

# 1.0 SUMMARY

## 1.1 Background Information

The project site is a residential area owned and maintained by State of Hawaii, Department of Hawaiian Home Lands (DHHL). The Molokai Island Plan by DHHL states that residents within the project site experience severe flooding events on an annual basis due to their location in the coastal area; heavy seasonal rainfall contributes to flooding in the areas. The US Army Corp of Engineers have assessed the installation of a diversion ditch north of the Kamehameha V Highway and improvements to the drainage channel under the highway leading into the Kapaakea Makai DHHL neighborhood. No funds have been allocated for these improvements. Local residents have recounted numerous incidents of flooding within the homestead lots. The Final Environmental Statement (1976, page 1-1) states that the most significant flood occurred during the period of October 31st to early November in 1961 when the homestead was inundated by approximately 2 feet of water, which deposited about one foot of mud on the homestead lands. The Kamehameha V Highway was under 3 feet of water during the height of the storm.

## 1.2 Project Description

The Kapaakea Flood Mitigation Improvements project will be located within five (5) DHHL parcels on the island of Molokai (TMK: (2) 5-4-007: 009, 010, 011, 024 & 025). Figure 1 identifies the project location. The properties are situated along Kamehameha V Highway and Kapaakea Loop. The adjacent property is owned by Good Fellow Brothers and is classified as wetlands. There is no municipal drainage system near the project site.

## 1.3 Drainage Summary

The project site is located in zone AE (varies between elev. 9-10) and VE (elev. 10) – Base Flood Elevations determined: Floodway as determined by the Federal Emergency Management Agency (FIRM Maps FM1500030189F & FM1500030193F, dated November 4, 2015) as shown in
Figure 2. The source of flooding is Kamiloloa Gulch and detailed study has been completed by FEMA.

In order to mitigate the flooding of the project site, a 700 linear foot concrete masonry unit (CMU) wall with swale will be constructed along the North and West-facing boundaries of the resident's properties. The CMU wall will divert the flow from Kamehameha V Highway to the existing wetland and will prevent any water flow from the wetland into the project site. The proposed CMU wall has a project area of 0.17 acres.

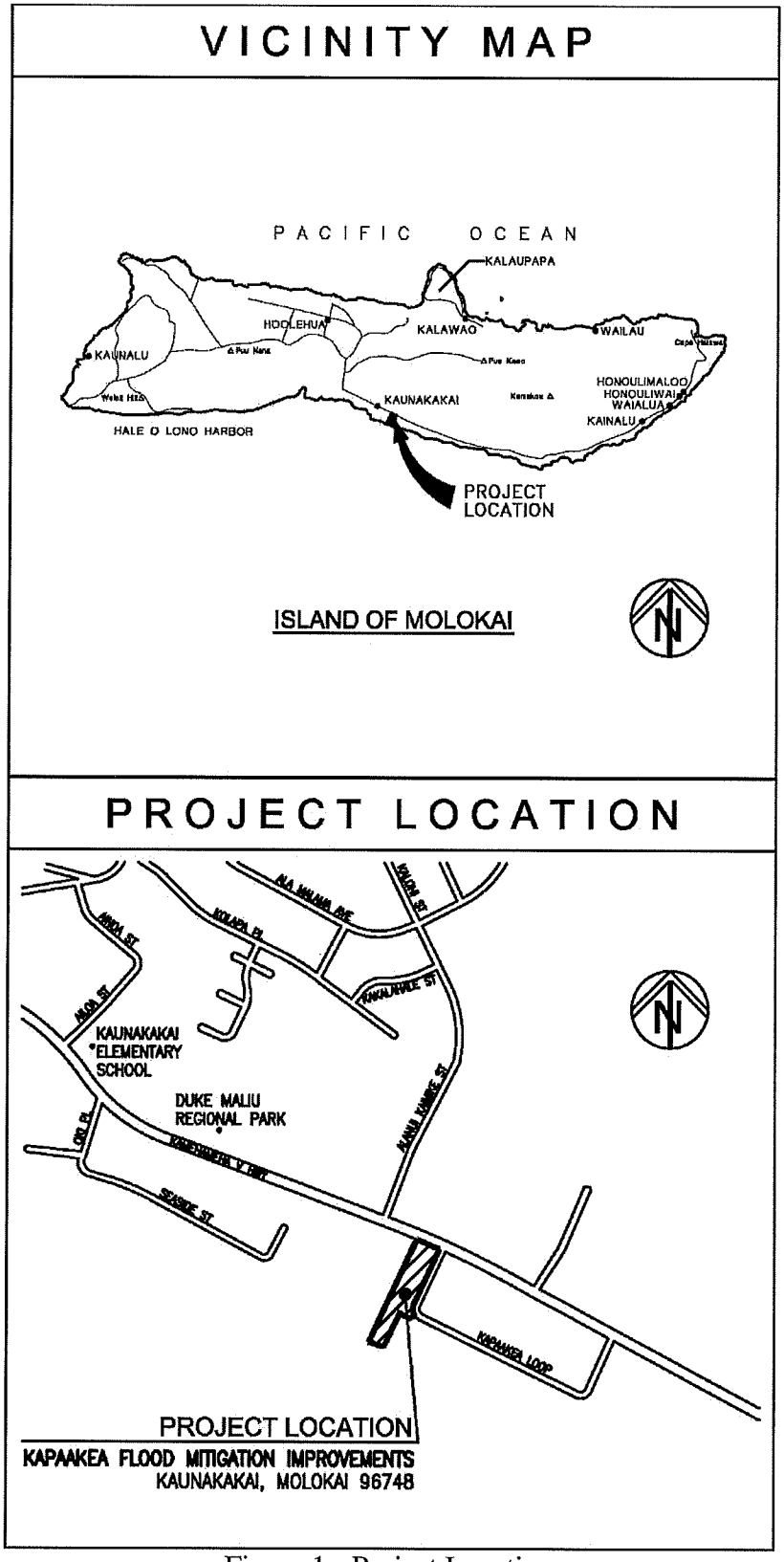


Figure 1 - Project Location

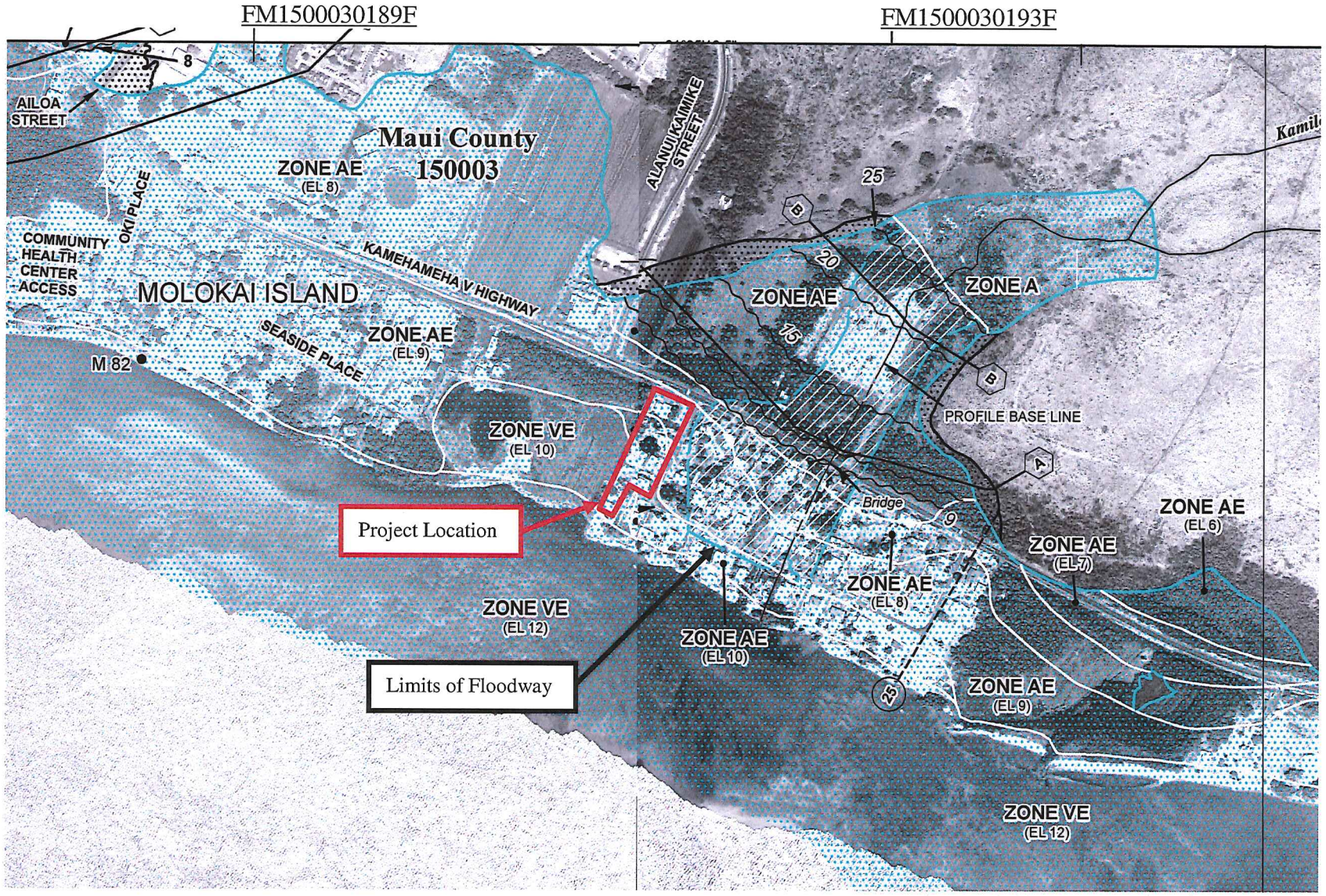


Figure 2 - FEMA Flood Maps (FM1500030189F & FM1500030193F)

# 2.0 HYDROLOGY

## 2.1 Soils

The soil of the project site consists of Kealia silt loam(KMW). Natural Resources Conservation Service (NRCS) states that Kealia silt loam is poorly drained and has a high content of salt. Ponding occurs in low areas after a heavy rain. When the soil dries, salt crystals accumulate on the surface. The soil has a brackish water table that fluctuates with the tides; the water table is nearer the surface along the shoreline than in inland areas. The slope ranges from 0 to 1 percent.

In a representative profile the surface layer is dark reddish-brown silt loam about 3 inches thick. Below this are stratified layers of silt loam, loam, and fine sandy loam. A brackish water table occurs at a depth of 12 to 40 inches. The subsurface layers are dark reddish brown to dark reddish gray in the upper part and dark grayish brown to black near the zone of the water table. The soil has a high concentration of salts and is moderately alkaline.

Permeability is moderately rapid. Runoff is slow to very slow. The hazard of water erosion is no more than slight, but the hazard of wind erosion is severe when the soil is dry and the surface layer becomes lose and fluffy.

## 2.2 On-site

The current use of the project site is residential. The on-site flow is attributed from the water that falls on each parcel in addition to the off-site storm water that overflows from Kamiloloa Stream.

## 2.3 Off-site

### 2.3.1. Existing Land Use

The parcels north of Kamehameha V Highway are owned by Molokai Properties, DHHL, and the County of Maui, see Figure 3. Kamiloloa Stream bisects the DHHL property and is diverted around the County of Maui property.

### 2.3.2. Surface Water

The project site is near the mouth of the Kamiloloa Stream and adjacent to the wetland and Pacific Ocean. The surface water received at the mouth of the stream spills over through the parcels to the ocean. Geographically, the lowest points are the ocean-front properties and the adjacent wetlands, west of the DHHL homestead lots.




Figure 3 – Mauka Property Owners

## 3.0 DESIGN CRITERIA

The following design criteria are based on the "Storm Drainage Standard" Department of Public Works and Waste Management, County of Maui, November 1995.

For drainage areas of 100 acres or less, the recurrence interval (Tm) = 10 years based on a 1-hour storm, unless otherwise specified.
Rational Method (Q = CIA) is used to estimate the runoff from drainage basins.

Runoff Quantities
Rational Method

Q = CIA where,
Q = flow rate in cubic feet per second (cfs)
C = runoff coefficient
Asphalt concrete pavement and shoulder: C = 0.90
Landscaped, bare ground, or porous pavement: C=0.55
I = rainfall intensity in inches per hour (in / hr) for a duration equal to the time of concentration

1. Rainfall Intensity, I, determined by using Plate 1 to determine the 1-hour rainfall intensity (inches) for the design storm recurrence interval needed to obtain the value from Plate 4 attached.
2. Time of Concentration, Tc, determined from Plate 3 attached.

A = drainage area in acres (ac)

### 3.1 On-site

| *Existing Drainage Area* | *Area (acres)* | *Runoff (cfs)* |
|---|---|---|
| 1 | 2.182 | 4.75 |
| **TOTAL** | **2.182** | **4.75** |

| *Proposed Drainage Area* | *Area (acres)* | *Runoff (cfs)* |
|---|---|---|
| 1 | 2.182 | 4.75 |
| **TOTAL** | **2.182** | **4.75** |

The proposed onsite runoff will be the same as the predevelopment onsite runoff since an existing rock wall will be removed prior to the proposed construction.
In order to mitigate the flooding of the project site from the offsite runoff, constructing 700 LF of the concrete masonry unit (CMU) wall with a swale along the property line is proposed. The CMU wall will divert the flow from Kamehameha V Highway to the existing wetland and will prevent the water flow from the wetland to the project site while still allowing water flow from the project site to the wetland.
The proposed CMU wall has a project area of 0.17 acres along the boundary of each property.

## 3.2 Off-site

| FLOODING SOURCE | | FLOODWAY | | | BASE FLOOD WATER SURFACE ELEVATION | | | |
|---|---|---|---|---|---|---|---|---|
| CROSS SECTION | DISTANCE[1] | WIDTH (FEET) | SECTION AREA (SQUARE FEET) | MEAN VELOCITY (FEET PER SECOND) | REGULATORY | WITHOUT FLOODWAY | WITH FLOODWAY | INCREASE |
| | | | | | (FEET NGVD) | | | |
| Kawela Gulch | | | | | | | | |
| A | 150 | 1,187 | 3,289 | 5.2 | 5.8 | 5.8 | 6.6 | 0.8 |
| B | 705 | 1,106 | 2,724 | 6.2 | 8.7 | 8.7 | 9.7 | 1.0 |
| C | 1,180 | 664 | 1,624 | 10.5 | 12.4 | 12.4 | 13.4 | 1.0 |
| D | 1,725 | 338 | 1,314 | 12.9 | 28.6 | 28.6 | 29.3 | 0.7 |
| Kamalo Gulch | | | | | | | | |
| A | 200 | 966 | 2,559 | 4.9 | 4.0 | 4.0 | 5.0 | 1.0 |
| B | 820 | 487 | 1,179 | 10.7 | 7.8 | 7.8 | 8.8 | 1.0 |
| Kamiloloa Gulch | | | | | | | | |
| A | 260 | 570 | 1,569 | 5.9 | 4.7 | 4.7 | 5.7 | 1.0 |
| B | 715 | 465 | 1,455 | 9.5 | 10.0 | 10.0 | 10.9 | 0.9 |
| C | 1,330 | 455 | 933 | 13.4 | 20.4 | 20.4 | 21.3 | 0.9 |
| Ohia Gulch | | | | | | | | |
| A | 270 | 469 | 994 | 6.0 | 6.6 | 6.6 | 7.6 | 1.0 |
| B | 590 | 212 | 846 | 7.1 | 10.5 | 10.5 | 11.3 | 0.8 |
| C | 1,150 | 138 | 725 | 8.3 | 22.8 | 22.8 | 23.2 | 0.4 |
| Kahananui Gulch | | | | | | | | |
| A | 280 | 615 | 1,864 | 4.8 | 6.2 | 6.2 | 7.2 | 1.0 |
| B | 760 | 171 | 846 | 10.5 | 15.2 | 15.2 | 16.2 | 1.0 |
| Pukoo Gulch | | | | | | | | |
| A | 630 | 366 | 867 | 3.3 | 9.0 | 9.0 | 9.7 | 0.7 |
| B | 760 | 101 | 261 | 11.1 | 10.4 | 10.4 | 11.4 | 1.0 |
| C | 900 | 127 | 313 | 9.3 | 14.8 | 14.8 | 15.8 | 1.0 |
| Waialua Stream | | | | | | | | |
| A | 370 | 427 | 2,475 | 4.1 | 11.4 | 11.4 | 12.3 | 0.9 |
| B | 690 | 477 | 3,699 | 2.8 | 11.9 | 11.9 | 12.8 | 0.9 |
| C | 1,260 | 120 | 735 | 13.9 | 14.3 | 14.3 | 15.3 | 1.0 |

[1]Feet Above Mouth

TABLE 3 | FEDERAL EMERGENCY MANAGEMENT AGENCY | MAUI COUNTY, HI | FLOODWAY DATA | KAWELA GULCH-KAMALO GULCH-KAMILOLOA GULCH OHIA GULCH- KAHANANUI GULCH- PUKOO GULCH- WAIALUA STREAM

**Table 2 – Off-site Floodway Data**

Table 1. Summary of Discharges (Cont'd)

| Flooding Source and Location | Drainage Area (Square Miles) | Peak Discharge (Cubic Feet per Second) 10-Year | 50-Year | 100-Year | 500-Year |
|---|---|---|---|---|---|
| ISLAND OF MOLOKAI | | | | | |
| Kawela Gulch<br>At Mouth | 5.7 | 5,800 | 13,000 | 17,000 | 30,000 |
| Kamalo Gulch<br>At Mouth | 4.0 | 4,300 | 9,600 | 12,600 | 22,100 |
| Kamiloloa Stream<br>At Mouth | 3.7 | 2,525 | 6,000 | 8,200 | 15,655 |
| Keawanui Gulch<br>At Mouth | 0.77 | 1,400 | 3,100 | 4,100 | 7,400 |
| Ohia Gulch<br>At Mouth | 1.28 | 2,100 | 4,500 | 6,000 | 10,600 |
| Kahananui Gulch<br>At Mouth | 0.98 | 1,700 | 3,700 | 5,000 | 8,600 |
| Mānawai Gulch<br>At Mouth | 0.71 | 1,300 | 3,000 | 3,900 | 7,000 |
| Pukoo Gulch<br>At Mouth | 0.52 | 960 | 2,320 | 2,900 | 5,200 |
| Waialua Stream<br>At Mouth | 2.60 | 3,500 | 7,700 | 10,200 | 18,000 |

**Table 3 – Summary of Discharges**

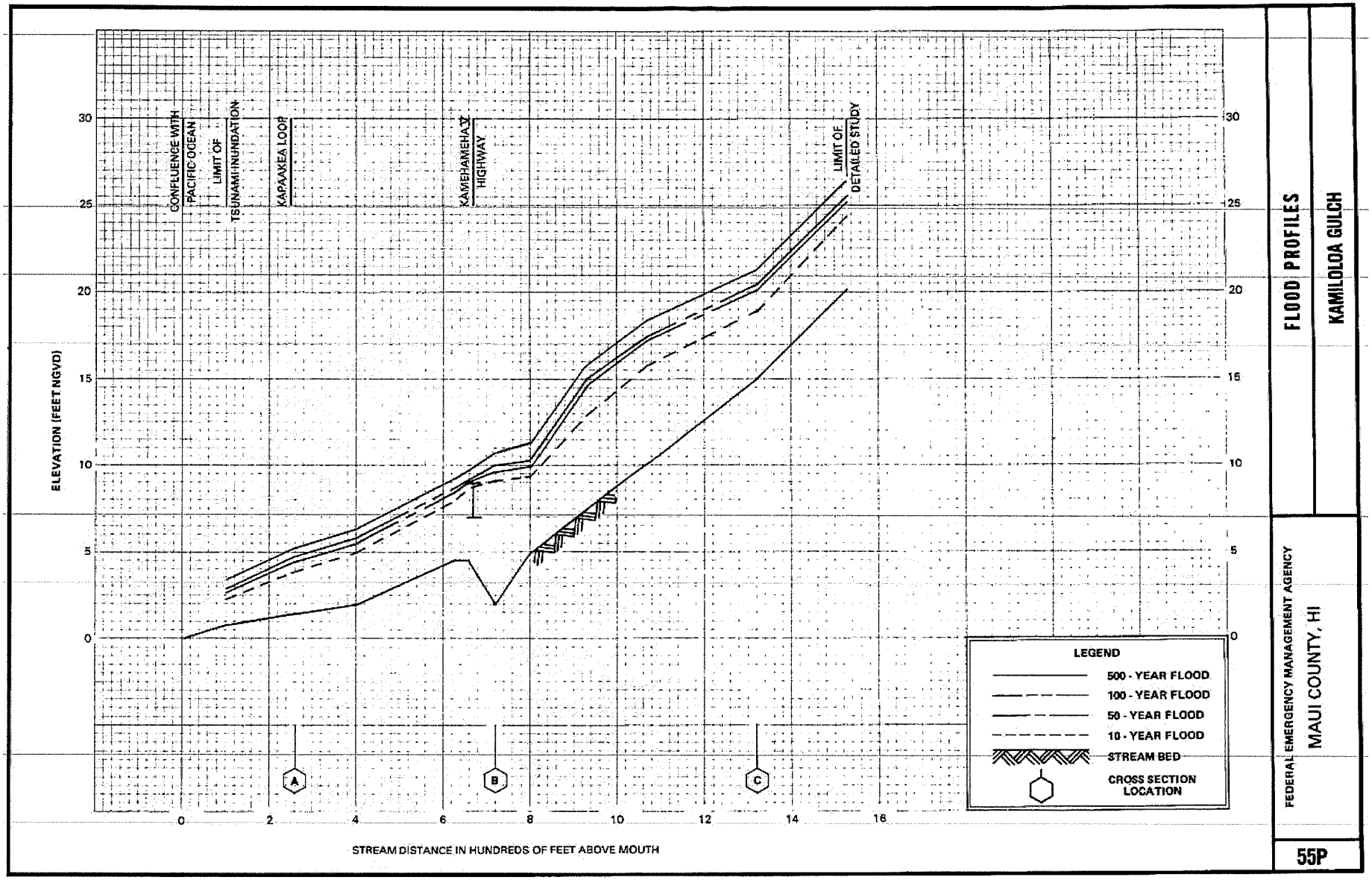


**Table 4 – Flood Profiles, Kamiloloa Gulch**

In 1976, the US Army Corp of Engineers (USACE) has proposed a 1,800-foot long channel with diversion levees at mauka of the highway and improving the drainage channel under Kamehameha V Hwy leading into the Kapaakea Makai DHHL neighborhood but funds have not been allocated for this improvement.

## 4.0 CONCLUSION

Based on the study above, Kamiloloa stream at mouth will receive a peak storm water runoff of 2,525 cfs for 10 year storm. Using the area of the project site, 2.182 acres, and the total area, 21.6 acres, near the stream, a runoff of approximately 303 cfs will cross the project site. This flow will be diverted to the ocean and adjacent wetland by means of the natural lay of the land and the new swale. The wall will prevent any water from the wetland from entering the residential properties.

## 5.0 REFERENCES

1. Flood Insurance Rate Map (FIRM), County of Maui, September 25, 2009.

2. *Storm Drainage Standards*. Department of Public Works and Waste Management, County of Maui, November 1995.

3. Final Environmental Statement Flood Control Project, Kapaakea, Molokai, US Army Corps of Engineer, Honolulu, December 1976

4. United States Department of Agriculture, Natural Resources Conservation Service, Accessed June 25, 2015, http://websoilsurvey.nrcs.usda.gov/app/

# APPENDIX C

# COST ESTIMATE

**Kapaakea Flood Mitigation Improvements**
**FINAL DESIGN - CONSTRUCTION COST ESTIMATE**
**Kapaakea, Molokai, Hawaii**

**Mitsunaga & Associates, Inc.**
**Date: February 2016**

| Item No. | Item | Qty | Unit | Unit Price | Total Price |
|---|---|---|---|---|---|
| | | | | | |
| | **DEMOLITION** | | | | |
| 1 | Remove & Dispose of Exist. Chain Link Fence Fabric, Posts & Foundations | 260 | LF | $ 10.00 | $ 2,600.00 |
| 2 | Remove & Dispose of Exist. CRM Wall | 115 | LF | $ 12.00 | $ 1,380.00 |
| 3 | Remove & Dispose of Exist Tree | 13 | EA | $ 800.00 | $ 10,400.00 |
| | **SUBTOTAL DEMOLITION** | | | | **$ 14,380.00** |
| | | | | | |
| | **SITE IMPROVEMENTS** | | | | |
| 4 | Temporary Erosion Control Measures, In-Place Complete | 1,500 | LF | $ 12.00 | $ 18,000.00 |
| 5 | Excavation | 275 | CY | $ 60.00 | $ 16,500.00 |
| 6 | Site Grading | 7,500 | SF | $ 3.00 | $ 22,500.00 |
| 7 | CMU Wall, In Place Complete | 700 | LF | $ 150.00 | $ 105,000.00 |
| 8 | Check Valves | 38 | EA | $ 275.00 | $ 10,450.00 |
| 9 | Geofabric | 800 | LF | $ 20.00 | $ 16,000.00 |
| | **SUBTOTAL SITE IMPROVEMENTS** | | | | **$ 188,450.00** |
| | | | | | |
| | **SITE WORK BASE BID SUBTOTAL ESTIMATED COST** | | | | **$ 202,830.00** |
| | **MOBILIZATION / CONTINGENCY (10%)** | | | | **$ 18,850.00** |
| | **SITE WORK BASE BID TOTAL ESTIMATED COST** | | | | **$ 221,680.00** |

# APPENDIX B.

# Project Plans

# KAPAAKEA FLOOD MITIGATION IMPROVEMENTS

FOR THE
DEPARTMENT OF HAWAIIAN HOME LANDS

KAUNAKAKAI, MOLOKAI 96748
TAX MAP KEY: (2) 5-4-007: 009, 010, 011, 024 & 025
JOB NO.: PS-14-LDD-008

## VICINITY MAP

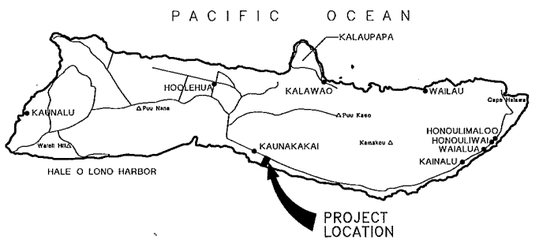


ISLAND OF MOLOKAI

## PROJECT LOCATION

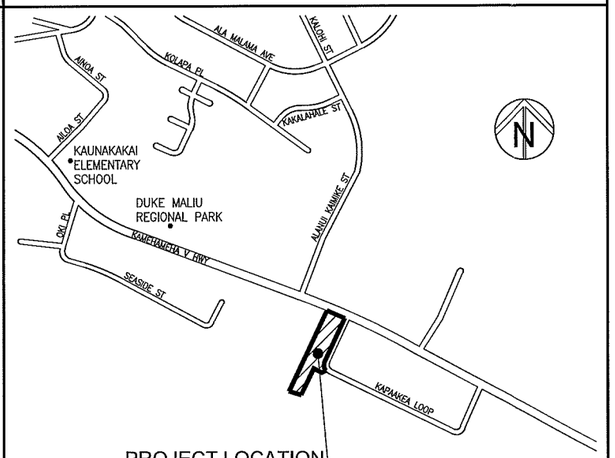


PROJECT LOCATION
KAPAAKEA FLOOD MITIGATION IMPROVEMENTS
KAUNAKAKAI, MOLOKAI 96748

APPROVED:

CHAIRMAN, HAWAIIAN HOMES COMMISSION
DEPARTMENT OF HAWAIIAN HOME LANDS
STATE OF HAWAII

DATE

| REVISION NO. | SYM. | DESCRIPTION | SHT OF | DATE |
|---|---|---|---|---|
| | | | | |

CHAD N. MCDONALD
LICENSED PROFESSIONAL ENGINEER
No. 9703-C
HAWAII, U.S.A.

This work was prepared by me or under my supervision

4/30/2016
MITSUNAGA & ASSOCIATES, INC. EXP. DATE

NOTE: Contractor to check and verify dimensions of job before proceeding with work.

DEPARTMENT OF HAWAIIAN HOME LANDS
STATE OF HAWAII

KAPAAKEA FLOOD MITIGATION IMPROVEMENTS
KAUNAKAKAI, MOLOKAI

TITLE SHEET

| MITSUNAGA & ASSOCIATES, INC. | | JOB NO. | DRAWING NO. |
|---|---|---|---|
| DESIGNED BY: SD | CHECKED BY: SD | P61001-13 | T-1 |
| DRAWN BY: DT | APPROVED BY: CM | DATE: DECEMBER 2015 | SHEET 1 OF 8 SHTS |
| SCALE: AS INDICATED | | | |

FILE _____ DRAWER _____ FOLDER _____

## GENERAL NOTES

1. ALL CONSTRUCTION WORK SHALL BE DONE IN ACCORDANCE WITH THE "HAWAII STANDARD SPECIFICATIONS FOR ROAD AND BRIDGE CONSTRUCTION", 2005 AND "STANDARD DETAILS FOR PUBLIC WORKS CONSTRUCTION" DATED SEPTEMBER 1984 OF THE DEPARTMENT OF PUBLIC WORKS, COUNTY OF MAUI, AS AMENDED.
2. THE CONTRACTOR SHALL OBTAIN AND PAY FOR ALL PERMITS AND LICENSES REQUIRED. THE CONTRACTOR SHALL CONDUCT ALL TESTS AS REQUIRED BY THE ENGINEER AND BE RESPONSIBLE FOR ALL EXPENSES INCURRED IN CONDUCTING THESE TESTS.
3. THE CONTRACTOR SHALL NOTIFY THE DEPARTMENT OF PUBLIC WORKS AND ENVIRONMENTAL MANAGEMENT, COUNTY OF MAUI, ENGINEERING DIVISION SEVEN (7) DAYS PRIOR TO COMMENCEMENT OF CONSTRUCTION.
4. THE CONTRACTOR SHALL BE RESPONSIBLE FOR VERIFYING THE LOCATIONS AND INVERTS OF ALL EXISTING UTILITIES AND DRAINAGE SYSTEMS, WHETHER SHOWN ON THE PLANS OR NOT, PRIOR TO COMMENCEMENT OF CONSTRUCTION.
5. THE CONTRACTOR SHALL VERIFY AND CHECK ALL DIMENSIONS AND DETAILS SHOWN ON THE DRAWINGS PRIOR TO THE START OF CONSTRUCTION. THE CONTRACTOR SHALL IMMEDIATELY NOTIFY THE ENGINEER OF ANY DISCREPANCY OR CONFLICTS FOUND IN THE FIELD PRIOR TO OR DURING THE COURSE OF CONSTRUCTION AND SHALL NOT PROCEED WITH CONSTRUCTION UNTIL THE ENGINEER RESOLVES THE SAID DISCREPANCY OR CONFLICT.
6. FOR DETAILS NOT DELINEATED BY THESE PLANS, THE CONTRACTOR SHALL REFER TO THE "STANDARD DETAILS FOR PUBLIC WORKS CONSTRUCTION" MAUI, HAWAII AND KAUAI COUNTIES AND CITY AND COUNTY OF HONOLULU, OR THE "WATER SYSTEM STANDARDS", DATED 2002, WHICHEVER IS APPLICABLE.
7. UNLESS OTHERWISE NOTED, ALL EXISTING PAVEMENT, UTILITY LINES AND OTHER IMPROVEMENTS WITHIN THE COUNTY RIGHT-OF-WAY THAT ARE DAMAGED OR UNDERMINED AS A RESULT OF THE CONTRACTOR'S OPERATION SHALL BE RECONSTRUCTED OR REPLACED BY THE CONTRACTOR AT HIS OWN EXPENSE TO MATCH OR BETTER THAN EXISTING CONDITIONS.
8. ALL VISIBLE UTILITY STRUCTURES HAVE BEEN LOCATED IN THE FIELD. HOWEVER, CONNECTIONS TO UNDERGROUND UTILITY LINES AS SHOWN ARE UNVERIFIED AND COMPILED FROM EXISTING DATA. UNDERGROUND UTILITIES SHOWN HEREIN ARE FOR INFORMATION ONLY, HAVING BEEN OBTAINED FROM THE BEST AVAILABLE SOURCES. NO GUARANTEE IS MADE ON THE ACCURACY OR COMPLETENESS OF SAID INFORMATION. THE CONTRACTOR SHALL BE RESPONSIBLE FOR PAYMENT OF ANY DAMAGED UTILITIES.
9. PRIOR TO THE START OF CONSTRUCTION, THE CONTRACTOR SHALL TONE OR PROBE THE PROJECT SITE TO VERIFY THE LOCATION OF ALL UNDERGROUND UTILITIES AND PIPELINES WHETHER SHOWN OR NOT. IF UTILITIES OR PIPELINES ARE FOUND DURING PROBING AND ARE NOT SHOWN ON THE PLANS, THE ENGINEER SHALL BE NOTIFIED IMMEDIATELY.
10. THE CONTRACTOR SHALL OBSERVE AND COMPLY WITH ALL FEDERAL, STATE, AND LOCAL LAWS REQUIRED FOR THE PROTECTION OF PUBLIC HEATH, SAFETY, AND ENVIRONMENTAL QUALITY.
11. WHENEVER CONNECTIONS OF NEW UTILITIES TO EXISTING UTILITIES ARE SHOWN ON THE PLANS, THE CONTRACTOR SHALL EXPOSE THE EXISTING LINES AT THE PROPOSED CONNECTIONS TO VERIFY THEIR LOCATIONS, DEPTHS AND ASSURE CONNECTIONS CAN BE MADE PRIOR TO EXCAVATION FOR THE NEW LINES, AT NO ADDITIONAL COST TO THE STATE.
12. IN THE EVENT THAT SUBSURFACE CULTURAL REMAINS SUCH AS ARTIFACTS, BURIALS, OR DEPOSITS OF SHELLS OR CHARCOAL ARE ENCOUNTERED DURING EXCAVATION WORK, THE CONTRACTOR SHALL STOP WORK IN THE AREA OF THE FIND AND CONTACT THE DEPARTMENT OF LAND AND NATURAL RESOURCES, HISTORIC PRESERVATION DIVISION (808-692-8015) IMMEDIATELY.
13. TOPOGRAPHIC SURVEY PERFORMED BY ENGINEERING SURVEYORS HAWAII, INC., DATED OCTOBER 30, 2014.

## COMPACTION REQUIREMENTS

1. TESTING OF MATERIAL SHALL BE CONDUCTED BY AN APPROVED INDEPENDENT TESTING AGENCY IN ACCORDANCE WITH ASTM STANDARD METHODS OR AS SPECIFIED BY THE DEPARTMENT OF PUBLIC WORKS AND ENVIRONMENTAL MANAGEMENT, COUNTY OF MAUI, AS FOLLOWS:
   a. EMBANKMENT/SELECT BORROW AND SUBGRADE MATERIALS: ONE (1) COMPACTION TEST PER 600 SQUARE YARDS PER LIFT;
   b. AGGREGATE SUBBASE COURSE: ONE (1) COMPACTION TEST PER 400 SQUARE YARDS; ONE (1) GRADATION AND SAND EQUIVALENT TEST PER LIFT PER PROJECT;
   c. AGGREGATE BASE COURSE: ONE (1) COMPACTION TEST PER 300 SQUARE YARDS; ONE (1) GRADATION AND SAND EQUIVALENT TEST PER PROJECT;
   d. ASPHALT CONCRETE PAVEMENT OR ASPHALT TREATED BASE COURSE; THREE (3) A.C. CORES FOR THICKNESS AND DENSITY TEST PER PROJECT;
   e. TRENCH BACKFILL MATERIAL: ONE (1) TEST FOR EACH 300 LINEAL FEET OF TRENCH PER LIFT OF MATERIAL.
2. CONTRACTOR SHALL SUBMIT ALL TESTING REPORTS INCLUDING RESULTS TO THE ENGINEER FOR REVIEW AND APPROVAL PRIOR TO COUNTY'S ACCEPTANCE OF WORK.
3. THE CONTRACTOR SHALL BE REQUIRED TO NOTIFY THE ENGINEER OF ANY TESTING FAILURES AND CORRECT EACH FAILURE PRIOR TO PROCEEDING TO THE NEXT PHASE OF CONSTRUCTION.

## GRADING NOTES

1. ALL GRADING WORK SHALL CONFORM TO THE MAUI COUNTY CODE. SHOULD A GRADING PERMIT BE REQUIRED, NO WORK SHALL COMMENCE UNTIL THE DEPARTMENT OF PUBLIC WORKS AND ENVIRONMENTAL MANAGEMENT (DPW) APPROVES A GRADING PERMIT.
2. THE CONTRACTOR SHALL PROVIDE ADEQUATE MEASURES TO PREVENT FLOODING AND EROSION PROBLEMS TO ADJACENT PROPERTIES.
3. THE CONTRACTOR SHALL REMOVE ALL SILT AND DEBRIS DEPOSITED IN DRAINAGE FACILITIES, ROADWAYS AND OTHER AREAS RESULTING FROM HIS WORK. THE COSTS INCURRED FOR ANY NECESSARY REMEDIAL ACTION BY THE DPW SHALL BE PAYABLE BY THE CONTRACTOR.
4. THE CONTRACTOR, AT HIS OWN EXPENSE, SHALL KEEP THE PROJECT AND SURROUNDING AREAS FREE FROM DUST NUISANCES. THE WORK SHALL BE IN CONFORMANCE WITH THE AIR POLLUTION CONTROL RULES OF THE STATE DEPARTMENT OF HEALTH, HAR 11-60.1, FUGITIVE DUST.
5. ALL GRADING OPERATIONS SHALL BE PERFORMED IN CONFORMANCE WITH THE APPLICABLE PROVISIONS OF THE HAWAII ADMINISTRATIVE RULES, TITLE 11, CHAPTER 55, WATER POLLUTION CONTROL AND CHAPTER 54, WATER QUALITY STANDARDS.
6. ALL GRADING OPERATIONS SHALL BE PERFORMED IN CONFORMANCE WITH THE APPLICABLE PROVISIONS OF THE HAWAII ADMINISTRATIVE RULES, TITLE 11, CHAPTER 46, COMMUNITY NOISE CONTROL.
7. SHOULD ANY UNANTICIPATED ARCHAEOLOGICAL SITE(S) BE UNCOVERED BY THE GRADING ACTIVITY, ALL WORK SHALL CEASE IN THE IMMEDIATE AREA AND THE CONTRACTOR SHALL NOTIFY THE STATE HISTORIC PRESERVATION DIVISION AT 692-8015. NO WORK SHALL RESUME UNTIL THE CONTRACTOR OBTAINS CLEARANCE FROM THE HISTORIC PRESERVATION DIVISION.
8. THE CONTRACTOR SHALL SOD OR PLANT ALL SLOPES AND EXPOSED AREAS IMMEDIATELY AFTER THE GRADING WORK HAS BEEN COMPLETED.
9. FILLS ON SLOPES STEEPER THAN 5:1 SHALL BE KEYED.
10. THE CONTRACTOR SHALL INFORM THE DPW OF THE LOCATION OF THE DISPOSAL AND/OR BORROW SITE(S) REQUIRED FOR THIS PROJECT WHEN AN APPLICATION FOR A GRADING PERMIT IS MADE. THE DISPOSAL AND/OR BORROW SITES MUST ALSO FULFILL THE REQUIREMENTS OF THE GRADING ORDINANCE.
11. NO GRADING WORK SHALL BE DONE ON SATURDAYS, SUNDAYS, AND HOLIDAYS ANYTIME WITHOUT PRIOR APPROVAL FROM DPW. GRADING WORK ON NORMAL WORKING DAYS SHALL BE BETWEEN THE HOURS OF 8:00 AM TO 4:30 PM.
12. FILLS SHALL BE COMPACTED TO 90 PERCENT (90%) OF MAXIMUM DENSITY PER ASTM D-1557 TEST, UNLESS SPECIFIED OTHERWISE.
13. THE CONTRACTOR SHALL REMOVE ALL VEGETATION BEFORE PLACING FILLS ON NATURAL GROUND SURFACE.
14. THE CONTRACTOR IS RESPONSIBLE FOR THE PROPER HANDLING, STORAGE AND/OR DISPOSAL OF ALL WASTE GENERATED BY THIS CONSTRUCTION. THE CONTRACTOR SHALL SUBMIT A PLAN TO MAUI COUNTY DEPARTMENT OF PUBLIC WORKS AND ENVIRONMENTAL MANAGEMENT FOR COMPOSTING AND DISPOSAL OF CLEARED AND GRUBBED MATERIAL AND RECYCLING AND DISPOSAL OF CONSTRUCTION WASTE.

## PUBLIC HEALTH SAFETY AND CONVENIENCE NOTES

1. THE CONTRACTOR SHALL OBSERVE AND COMPLY WITH ALL FEDERAL, STATE AND LOCAL LAWS REQUIRED FOR THE PROTECTION OF PUBLIC HEALTH, SAFETY AND ENVIRONMENTAL QUALITY.
2. THE CONTRACTOR, AT HIS OWN EXPENSE, SHALL KEEP THE PROJECT AND ITS SURROUNDING AREAS FREE FROM DUST NUISANCE. THE WORK SHALL BE IN CONFORMANCE WITH THE AIR POLLUTION STANDARDS AND REGULATIONS OF THE STATE DEPARTMENT OF HEALTH, THE COUNTY MAY REQUIRE SUPPLEMENTARY MEASURES AS NECESSARY.
3. NO CONTRACTOR SHALL PERFORM ANY TRENCHING OPERATION SO AS TO CAUSE FALLING ROCKS, SOIL OR DEBRIS IN ANY FORM TO FALL, SLIDE OR FLOW ONTO ADJOINING PROPERTIES, STREETS OR NATURAL WATER COURSES. SHOULD SUCH VIOLATIONS OCCUR, THE COSTS INCURRED FOR ANY REMEDIAL ACTION BY THE ENGINEER SHALL BE PAYABLE BY THE CONTRACTOR.
4. WHERE PEDESTRIAN WALKWAYS EXIST, THEY SHALL BE MAINTAINED IN PASSABLE CONDITION OR OTHER FACILITIES FOR PEDESTRIANS SHALL BE PROVIDED. TEMPORARY PASSAGE WAYS SHALL BE ACCESSIBLE AND COMPLY WITH THE GUIDELINES BELOW;
   A. ADAAG 201.3 TEMPORARY AND PERMANENT STRUCTURES. THESE REQUIREMENTS SHALL APPLY TO TEMPORARY AND PERMANENT BUILDINGS AND FACILITIES
   B. ADAAG 206.1 GENERAL. ACCESSIBLE ROUTES SHALL BE PROVIDED IN ACCORDANCE WITH 206 AND SHALL COMPLY WITH CHAPTER 4.

## ENVIRONMENTAL PROTECTION NOTES

1. IN ACCORDANCE WITH CHAPTER 11-60.1, AIR POLLUTION CONTROL, TITLE 11, STATE ADMINISTRATIVE RULES, THE PROPERTY OWNER/DEVELOPER SHALL BE RESPONSIBLE FOR ENSURING THAT EFFECTIVE CONTROL MEASURES ARE PROVIDED TO MINIMIZE OR PREVENT ANY VISIBLE DUST EMISSION CAUSED BY THE CONSTRUCTION WORK FROM IMPACTING THE SURROUNDING AREAS INCLUDING THE OFF-SITE ROADWAYS USED TO ENTER/EXIT THE PROJECT. THESE MEASURES INCLUDE BUT ARE NOT LIMITED TO THE USE OF WATER WAGON, SPRINKLER SYSTEMS, DUST FENCES, ETC.
2. IN ACCORDANCE WITH CHAPTER 11-55, WATER POLLUTION CONTROL AND CHAPTER 11-54, WATER QUALITY STANDARDS, TITLE 11 , STATE ADMINISTRATIVE RULES, THE PROPERTY OWNER/DEVELOPER SHALL BE RESPONSIBLE FOR ENSURING THAT THE BEST MANAGEMENT PRACTICE (BMP) TO MINIMIZE OR PREVENT THE DISCHARGE OF SEDIMENTS, DEBRIS, AND OTHER WATER POLLUTANTS INTO STATE WATERS IS PROVIDED.
3. IN ACCORDANCE WITH CHAPTER 11-58.1, SOLID WASTE MANAGEMENT CONTROL, TITLE 11 , STATE ADMINISTRATIVE RULES, THE PROPERTY OWNER/DEVELOPER SHALL BE RESPONSIBLE FOR ENSURING THAT GRUB MATERIAL, DEMOLITION WASTE AND CONSTRUCTION WASTE GENERATED BY THE PROJECT ARE DISPOSED OF IN A MANNER OR AT A SITE APPROVED BY THE STATE DEPARTMENT OF HEALTH. DISPOSAL OF ANY OF THESE WASTES BY BURNING IS PROHIBITED.

## ARCHAEOLOGICAL NOTE

1. IF, DURING CONSTRUCTION, ANY ARCHAEOLOGICAL SITES OR REMAINS (SUCH AS ARTIFACTS, SHELL, BONE, OR CHARCOAL DEPOSITS, HUMAN BURIALS, ROCK OR CORAL ALIGNMENTS, PAVINGS, OR WALLS) ARE ENCOUNTERED, THE CONTRACTOR SHALL STOP WORK AND CONTACT THE STATE HISTORIC PRESERVATION DIVISION AT 692-8015. WORK IN THE IMMEDIATE AREA SHALL BE STOPPED UNTIL THE OWNER IS ABLE TO ASSESS THE IMPACT AND MAKE RECOMMENDATIONS FOR MITIGATE ACTIVITY.

## ABBREVIATIONS:

| | |
|---|---|
| & | AND |
| AC | ACRES |
| APPROX | APPROXIMATE, APPROXIMATELY |
| @ | AT |
| BW | BOTTOM OF WALL |
| BF | BOTTOM OF FOOTING |
| CB | CATCH BASIN |
| CONN | CONNECT, CONNECTION |
| ℄ | CENTERLINE |
| CONC | CONCRETE |
| CONT | CONTINUE, CONTINUOUS |
| CY | CUBIC YARD |
| D | DIAMETER |
| DET | DETAIL |
| DPP | DEPARTMENT OF PLANNING & PERMITTING |
| DPW | DEPARTMENT OF PUBLIC WORKS |
| DWG | DRAWING |
| E | EAST |
| EA | EACH |
| ELEC | ELECTRIC, ELECTRICAL |
| EP | EDGE OF PAVEMENT |
| ELEV, EL | ELEVATION |
| EXIST | EXISTING |
| FT | FOOT, FEET |
| FH | FIRE HYDRANT |
| FG | FINISH GRADE |
| H | HEIGHT |
| HORIZ | HORIZONTAL |
| ID | INSIDE DIAMETER |
| INV | INVERT |
| LAT | LATERAL |
| LF | LINEAR FOOT |
| LIN | LINEAR |
| MAX | MAXIMUM |
| MECH | MECHANICAL |
| MH | MANHOLE |
| MISC | MISCELLANEOUS |
| MIN | MINIMUM |
| MON | MONUMENT |
| N | NORTH |
| NTS | NOT TO SCALE |
| NO | NUMBER |
| OC | ON CENTER |
| OD | OUTSIDE DIAMETER |
| O/S | OFFSET |
| P | PROPERTY LINE |
| PVC | POLYVINYL CHLORIDE |
| PP | POWER POLE |
| PSI | POUNDS PER SQUARE INCH |
| POC | POINT ON CURVE |
| PORT | PORTABLE BUILDING |
| R | RADIUS |
| S | SOUTH, SLOPE, SEWER, SPAN |
| SF | SQUARE FOOT |
| SHT | SHEET |
| SIGMH | SIGNAL MANHOLE |
| SL | SEWER LINE |
| S/N | SERIAL NUMBER |
| SMH | SEWER MANHOLE |
| SQ | SQUARE |
| ST | STREET |
| STA | STATION |
| STD | STANDARD |
| SY | SQUARE YARD |
| T | TOP |
| TB | TOP OF BANK |
| TF | TOP OF FOOTING |
| TW | TOP OF WALL |
| TYP | TYPICAL |
| UP | UTILITY POLE |
| VB | VALVE BOX |
| VERT | VERTICAL |
| W | WATER |
| W/ | WITH |
| WL | WATERLINE |
| WMH | WATER MANHOLE |
| WM | WATER METER |
| WV | WATER VALVE |
| WVHH | WATER VALVE HAND HOLE |
| W | WEST |

## INDEX TO DRAWINGS



| SHEET | DWG. NO. | DESCRIPTION |
|---|---|---|
| 1 | T-1 | TITLE SHEET |
| 2 | C-1 | SHEET INDEX AND CONSTRUCTION NOTES |
| 3 | C-2 | EXISTING CONDITIONS |
| 4 | C-3 | DEMOLITION & EROSION CONTROL PLAN |
| 5 | C-4 | SITE & GRADING PLAN & PROFILE 1 |
| 6 | C-5 | SITE & GRADING PLAN & PROFILE 2 |
| 7 | C-6 | SECTIONS |
| 8 | C-7 | DETAILS |



| REVISION NO. | SYM. | DESCRIPTION | SHT ___ OF ___ | DATE |
|---|---|---|---|---|
| | | | | |
| | | | | |
| | | | | |

CHAD M. MCDONALD
LICENSED PROFESSIONAL ENGINEER
No. 9793-C
HAWAII, U.S.A.

This work was prepared by me or under my supervision

4/30/2016
MITSUNAGA & ASSOCIATES, INC. EXP. DATE

NOTE: Contractor to check and verify dimensions at job before proceeding with work.

DEPARTMENT OF HAWAIIAN HOME LANDS
STATE OF HAWAII

KAPAAKEA FLOOD MITIGATION IMPROVEMENTS
KAUNAKAKAI, MOLOKAI

SHEET INDEX AND CONSTRUCTION NOTES

| | | | |
|---|---|---|---|
| MITSUNAGA & ASSOCIATES, INC. | | JOB NO. P61001-13 | DRAWING NO. C-1 |
| DESIGNED BY: SD | CHECKED BY: SD | | |
| DRAWN BY: DT | APPROVED BY: CM | | |
| SCALE: AS INDICATED | | DATE: DECEMBER 2015 | SHEET 2 OF 8 SHTS |

FILE _____ DRAWER _____ FOLDER _____

DEPARTMENT OF HAWAIIAN HOME LANDS
STATE OF HAWAII

KAPAAKEA FLOOD MITIGATION IMPROVEMENTS
KAUNAKAKAI, MOLOKAI

EXISTING CONDITIONS

| REVISION NO. | SYM. | DESCRIPTION | SHT OF | DATE |
|---|---|---|---|---|
| | | | | |
| | | | | |
| | | | | |
| | | | | |

CHAD M. MCDONALD
LICENSED PROFESSIONAL ENGINEER
No. 9783-C
HAWAII, U.S.A.

This work was prepared by me or under my supervision

MATSUMOTO & ASSOCIATES, INC.

| JOB NO. | DRAWING NO. |
|---|---|
| P61001-13 | C-2 |

| DESIGNED BR. | CHECKED BR. |
|---|---|
| SD | SD |

| DRAWN BR. | APPROVED BR. |
|---|---|
| DT | CM |

SCALE: AS INDICATED

DECEMBER 2015

DATE

SHEET 3 OF 8 SHTS

MATSUMOTO & ASSOCIATES, INC.
6 Ohukai Road, Suite 201
Kihei, Maui, Hawaii 96753
Phone: (808) 879-3344
Fax: (808) 879-3350
E-mail: mail@matsumotoassociates.com

NOTE: Contractor is directed to verify elevations at job before proceeding with work.

MITSUMOTA & ASSOCIATES, INC. EXP. DATE
4/30/2016

FILE _____ DRAWN _____ TRACED _____

GRAPHIC SCALE:
1" = 20'
20' 10' 0 20' 40'

EXISTING CONDITIONS
SCALE: 1" = 20'

Sta. "Maka"
Elev.= 5.36

STA. "MAKAI"
ELEV.=5.36

STA. "MAUKA"
ELEV.=8.47
(ASSUMED BENCHMARK)

Sta. Mauka
Elev.= 8.47
(Assumed Benchmark)

KAMEHAMEHA V HIGHWAY

KAPAAKEA LOOP

Kapa

Lot 1
Lot 2
Lot 3
Lot 4
Lot 5
Lot 6

House
shed
covered patio
conc.slab
clothsline
driveway
gravel
Cesspool
Cesspool 7.98
Cesspool 8.12
Monkeypod D=5', H=30', S=80
Mango Trees D=26', H=25', S=50
Citrus D=0.5', H=10', S=15'
Kiawe D=2', H=30', S=40
Kiawe D=1', H=20', S=30
Kiawe D=1', H=20', S=50
Kiawe D=1', H=15', S=30
Seagrape D=2', H=20', S=50
Plumeria D=1', H=10', S=15'
Coconut
corrugated 6.16 roof
coral
landlgd
Ramp
Rock Wall
CRM Wall
Bank
Top
SHORELINE FOLLOWS ALONG TOP BANK & LOOSE ROCK WALL

Speed Limit Sign
X-Walk Sign
Utility Pole
Traffic Light
Catch Basin
Drain Inlet
Manhole
Water Meter
Gate
Fence
Wall
Rock Wall
Concrete Wall
Chain link fence
Concrete curb
Gutter
Edge of pavement
Edge of road
Top of bank
Bottom of bank
Overhead utility lines
Underground utility lines
Underground telephone line
Underground electrical line
Underground cable TV line
Underground gas line
Underground water line
Underground sewer line
Underground drain line
Underground irrigation line
Underground fiber optic line
Underground communication line
Underground signal line
Underground traffic signal line
Underground street light line
Underground power line
Underground telephone line
Underground electrical line
Underground cable TV line
Underground gas line
Underground water line
Underground sewer line
Underground drain line
Underground irrigation line
Underground fiber optic line
Underground communication line
Underground signal line
Underground traffic signal line
Underground street light line
Underground power line

TMK: (2) 5-4-007: 025
TMK: (2) 5-4-007: 024
TMK: (2) 5-4-007: 011
TMK: (2) 5-4-007: 010
TMK: (2) 5-4-007: 009
TMK: (2) 5-3-007: 039

224.33'
160.00'
384.33'
205°14'45" 205°14'45"
393.66
128.66
95.00 95.00 75.00
679.96
205°14'45"
182°31'9", 509.52'
70°14'45" 28.28 R=20.00
97.00'
166.50
205°14'45" 207.00'
25°14'45" 206.06'
243.04
258.04
25°14'45"
115°14'45" 186.50
295°14'45" 186.50
115°14'45" 186.50
R=5441.44
120.00
605.74
215°18'36"
224.34', 215°18'

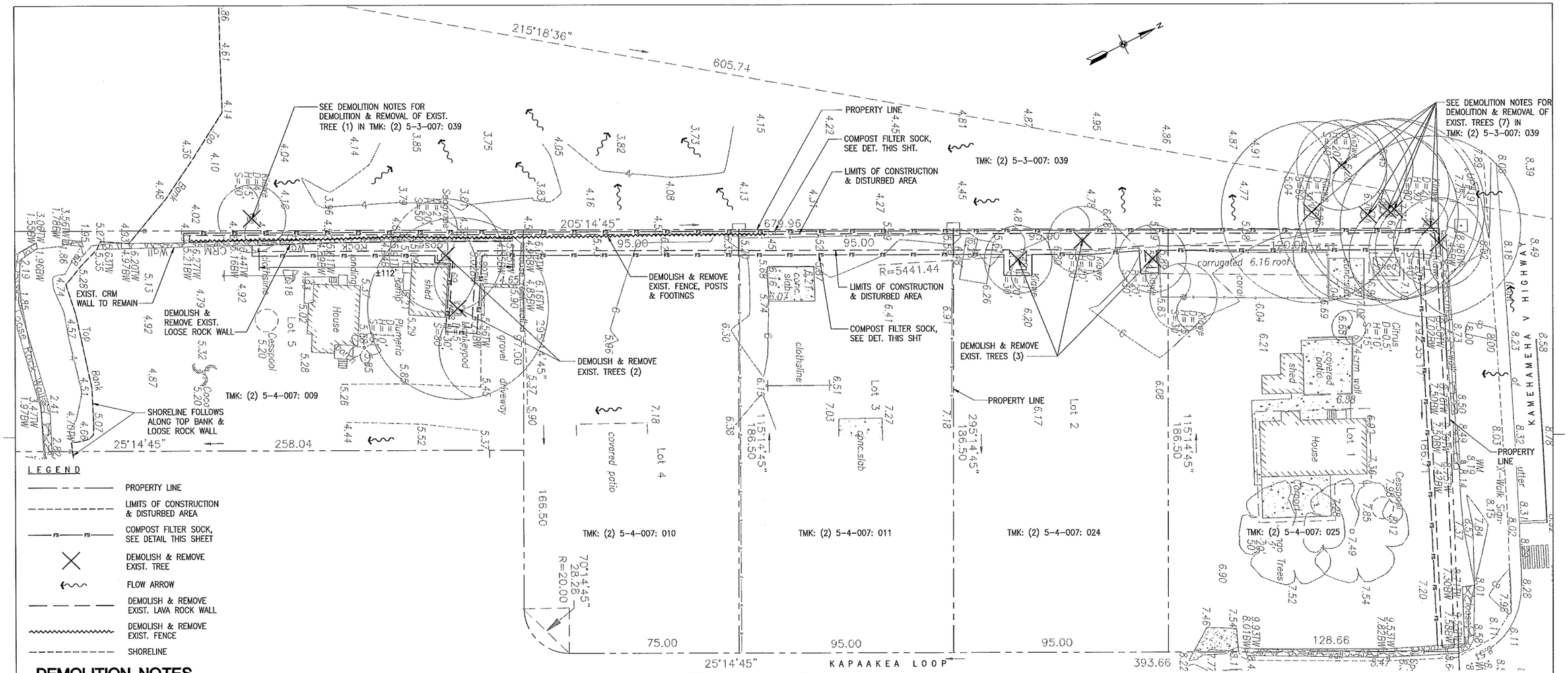


## DEMOLITION NOTES

1. TREES TO BE DEMOLISHED & REMOVED WITHIN TMK: (2) 5-3-007: 039 SHALL BE COORDINATED WITH THE PROPERTY CARETAKER AT 808-553-5992.
2. ALL TREES WITHIN TMK: (2) 5-3-007: 039 SHALL BE CUT AT THE BASE AND TREATED WITH GARLON 4 HERBICIDE OR APPROVED EQUAL.
3. CONTRACTOR SHALL REMOVE AND PROPERLY DISPOSE OF ALL WOODY DEBRIS AND RUBBISH OFF-SITE.

## EROSION CONTROL NOTES

TEMPORARY EROSION CONTROL NOTES:

1. FOLLOW SEQUENCE OF OPERATION AS RECOMMENDED ON PAGES 23 AND 24 OF THE "RULES RELATING TO SOIL EROSION STANDARDS AND GUIDELINES", APRIL 1999, OF THE DEPARTMENT OF PLANNING AND PERMITTING, MAUI COUNTY.
2. THE CONTRACTOR SHALL MINIMIZE THE AMOUNT OF LAND TO BE EXPOSED AT ANY TIME.
3. EXPOSED AREAS THAT ARE NOT AT FINAL GRADE AND ARE EXPECTED TO BE EXPOSED FOR MORE THAN 30 DAYS SHALL BE PLACED WITH A VEGETATIVE COVER OR BE MULCHED (AT A RATE OF 45 CUBIC FEET PER 1,000 SQUARE FEET) IN ORDER TO PREVENT EROSION AND SILT RUNOFF.
4. TEMPORARY EROSION CONTROLS SHALL NOT BE REMOVED BEFORE PERMANENT EROSION CONTROLS ARE IN PLACE AND ESTABLISHED.

PERMANENT EROSION CONTROL MEASURES:

1. ALL SLOPES AND EXPOSED AREAS SHALL BE SODDED OR PLANTED AS SOON AS FINAL GRADES HAVE BEEN ESTABLISHED.
2. 2:1 SLOPES SHALL BE TREATED WITH GEOFABRIC OR TREATED WITH SOIL CONDITIONER TO AID IN THE ESTABLISHMENT OF TURF/ PLANTING.

## BMP NOTES:

TEMPORARY EROSION CONTROL MEASURES:

1. PRIOR TO CLEARING LAND FOR GRADING, TEMPORARY EROSION CONTROL MEASURES, SUCH AS COMPOST FILTER SOCK SHALL BE INSTALLED.
2. OPENING AND CLEARING OF LAND FOR GRADING SHALL BE PERFORMED INCREMENTALLY TO MINIMIZE EROSION POTENTIAL.
3. AREAS NOT WITHIN THE LIMITS OF CONSTRUCTION & DISTURBED AREA SHALL REMAIN VEGETATED DURING GRADING OPERATIONS.
4. SILT WHICH HAS ACCUMULATED ON COMPOST FILTER SOCK SHALL BE REMOVED AND DISPOSED OF ON A BI-WEEKLY BASIS.
5. WHEN CLEARED OR GRUBBED AREAS ARE NOT TO BE GRADED OR DISTURBED FOR 30 DAYS OR MORE, SEED, PLANT OR HYDROSEED TEMPORARY VEGETATION.
6. THE CONTRACTOR'S EQUIPMENT STORAGE AREAS SHALL BE PROTECTED THROUGH THE USE OF EARTH BERMS AND/OR ABSORPTION MATERIALS TO PREVENT POLLUTANTS FROM DISCHARGING INTO STATE WATERS. THE CONTRACTOR SHALL NSPECT AND MAINTAIN STORAGE AREAS.

SEQUENCE FOR SEDIMENT CONTROL:

1. INSTALL COMPOST FILTER SOCK.
2. GROUND COVER, SUCH AS GRASSING, MULCHING OR NETTING TO BE INSTALLED IMMEDIATELY AFTER FINAL GRADES ARE ESTABLISHED.

## DEMOLITION & EROSION CONTROL PLAN

SCALE: 1" = 20'

NOTE:
1. COMPOST SHALL NOT CONTAIN BIOSOLIDS AND SHOULD BE CONSISTENT WITH EPA GUIDELINES.
2. COMPOST FILTER SOCK SHALL BE 12" MIN. IN DIAMETER.
3. NO REBAR OR OTHER METAL RODS ARE TO BE USED AS ANCHORS.
4. ANCHORS SHALL HAVE A 4' MAX SPACING.

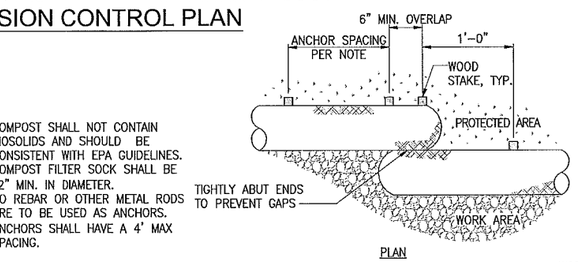


**01 COMPOST FILTER SOCK**
NOT TO SCALE

GRAPHIC SCALE:
1" = 20'
20' 10' 0 20' 40'

| REVISION NO. | SYM. | DESCRIPTION | SHT ___ OF ___ | DATE |
|---|---|---|---|---|
| | | | | |

CHAD M. MCDONALD
LICENSED PROFESSIONAL ENGINEER
No. 9793-C
HAWAII, U.S.A.

This work was prepared by me or under my supervision

4/30/2016
MITSUNAGA & ASSOCIATES, INC. EXP. DATE

NOTE: Contractor to check and verify dimensions at job before proceeding with work.

DEPARTMENT OF HAWAIIAN HOME LANDS
STATE OF HAWAII

KAPAAKEA FLOOD MITIGATION IMPROVEMENTS
KAUNAKAKAI, MOLOKAI

DEMOLITION & EROSION CONTROL PLAN

| MITSUNAGA & ASSOCIATES, INC. | | JOB NO. | DRAWING NO. |
|---|---|---|---|
| DESIGNED BY: SD | CHECKED BY: SD | P61001-13 | C-3 |
| DRAWN BY: DT | APPROVED BY: CM | DATE | SHEET 4 |
| SCALE: AS INDICATED | | DECEMBER 2015 | OF 8 SHTS |

FILE _____ DRAWER _____ FOLDER _____

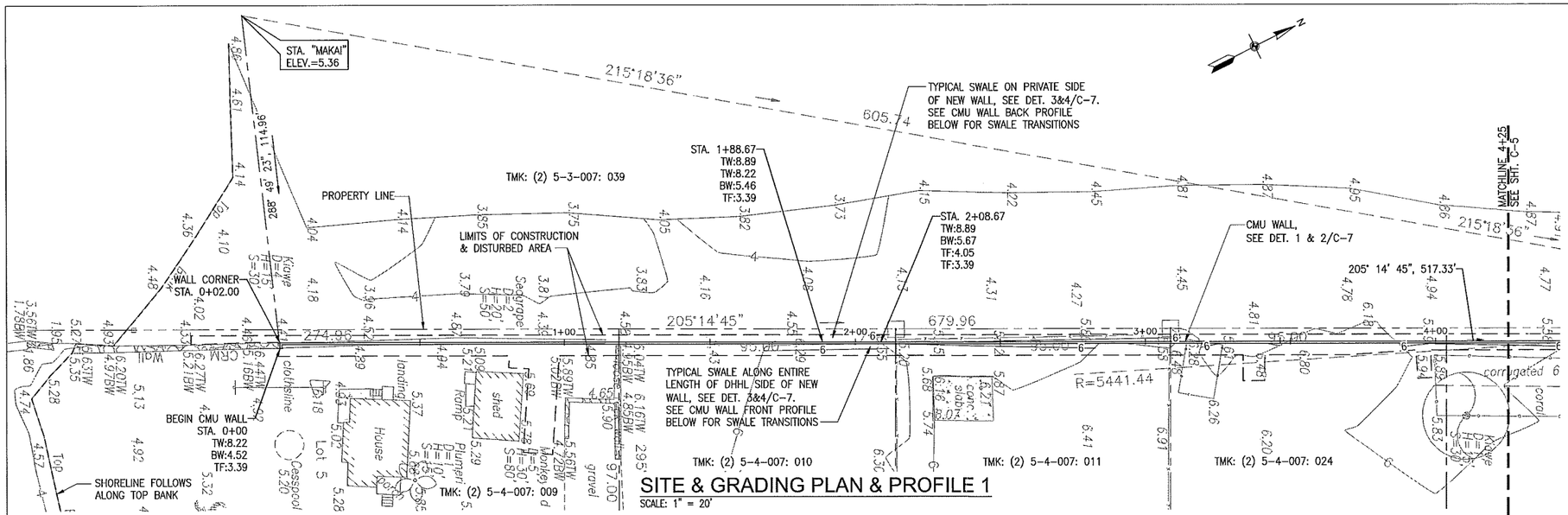


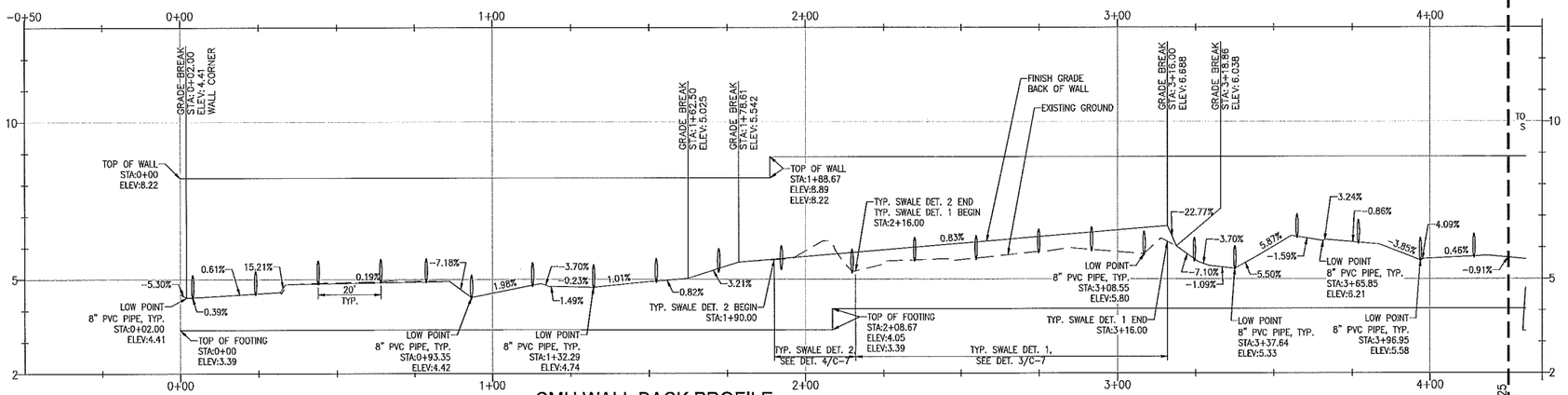


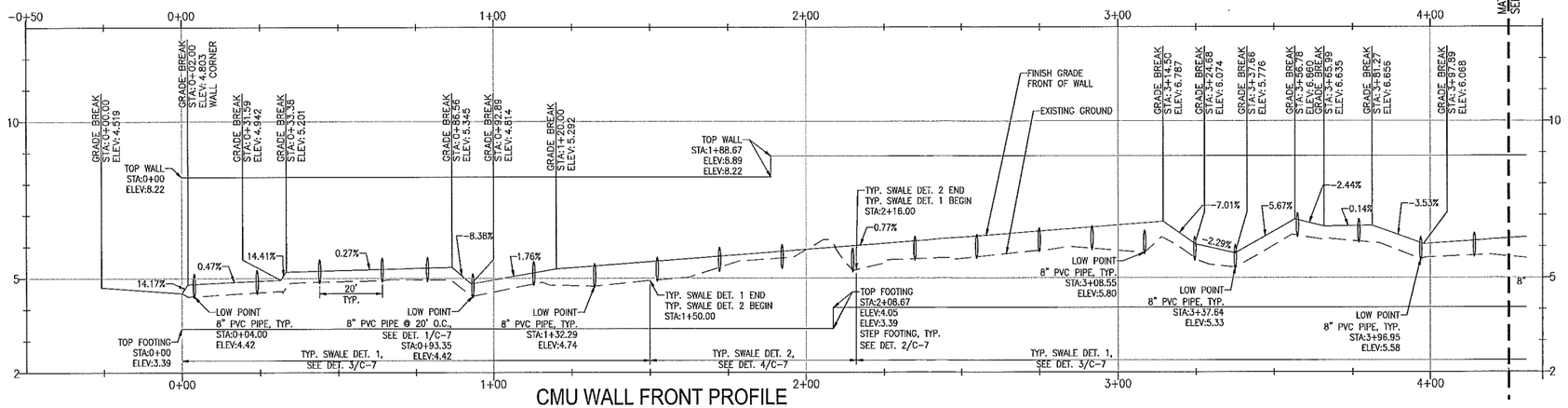


MATCHLINE 4+25
SEE SHT. C-5

LEGEND

- PROPERTY LINE
- LIMITS OF CONSTRUCTION & DISTURBED AREA
- 6 FINISHED GRADE CONTOUR
- SHORELINE

## EARTHWORK QUANTITIES:

(FOR GRADING PERMIT PURPOSES ONLY)

| | |
|---|---|
| GRADED AREA | 0.20 ACRES |
| EXCAVATION | 100 CY |
| EMBANKMENT | 10 CY |
| DISTURBED AREA | 0.33 ACRES |

GRAPHIC SCALE:

1" = 20' — 20' 10' 0 20' 40'

1" = 5' — 5' 0 5' 10'

| REVISION NO. | STM. | DESCRIPTION | SHT OF | DATE |
|---|---|---|---|---|
| | | | | |

CHAD M. MCDONALD — LICENSED PROFESSIONAL ENGINEER — No. 9793-C — HAWAII, U.S.A.

This work was prepared by me or under my supervision

4/30/2016

MITSUNAGA & ASSOCIATES, INC. EXP. DATE

NOTE: Contractor to check and verify dimensions at job before proceeding with work.

DEPARTMENT OF HAWAIIAN HOME LANDS
STATE OF HAWAII

KAPAAKEA FLOOD MITIGATION IMPROVEMENTS
KAUNAKAKAI, MOLOKAI

SITE & GRADING PLAN & PROFILE 1

| | | | |
|---|---|---|---|
| MITSUNAGA & ASSOCIATES, INC. | | JOB NO. | DRAWING NO. |
| DESIGNED BY: SD | CHECKED BY: SD | P61001-13 | C-4 |
| DRAWN BY: DT | APPROVED BY: CM | DATE | SHEET |
| SCALE: AS INDICATED | | DECEMBER 2015 | 5 OF 8 SHTS |

FILE _____ DRAWER _____ FOLDER _____

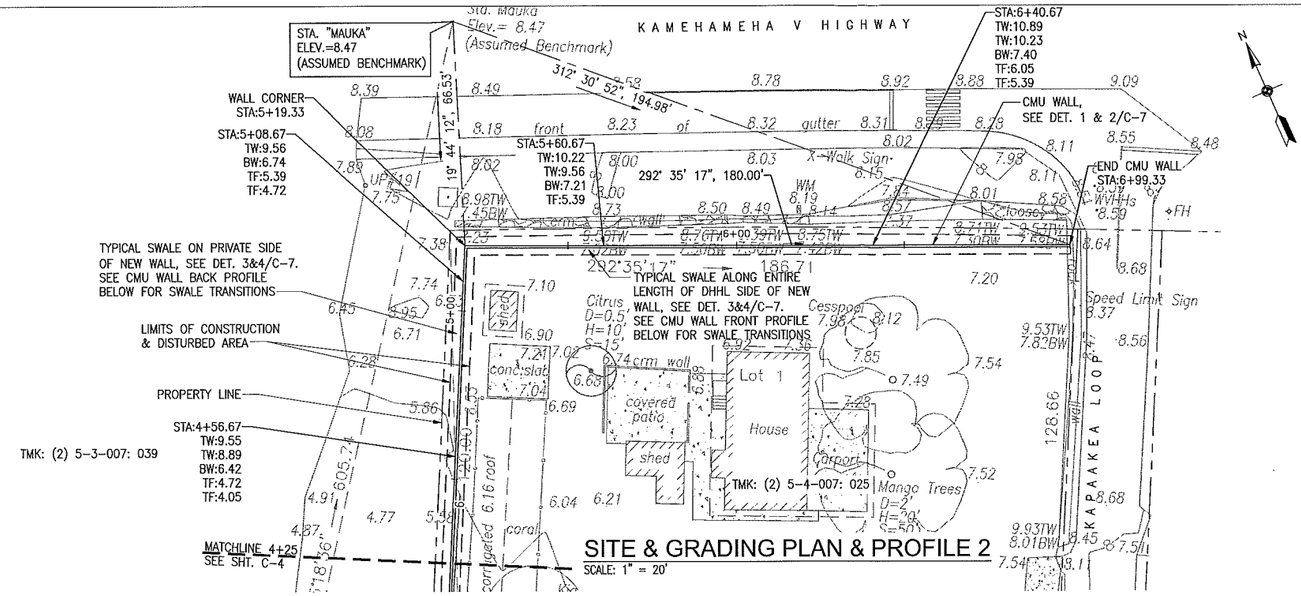


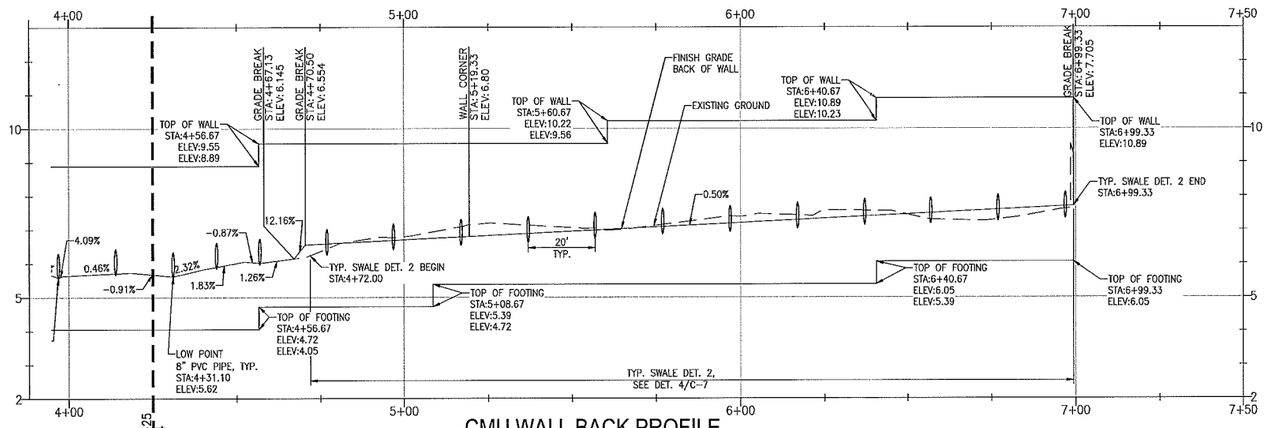


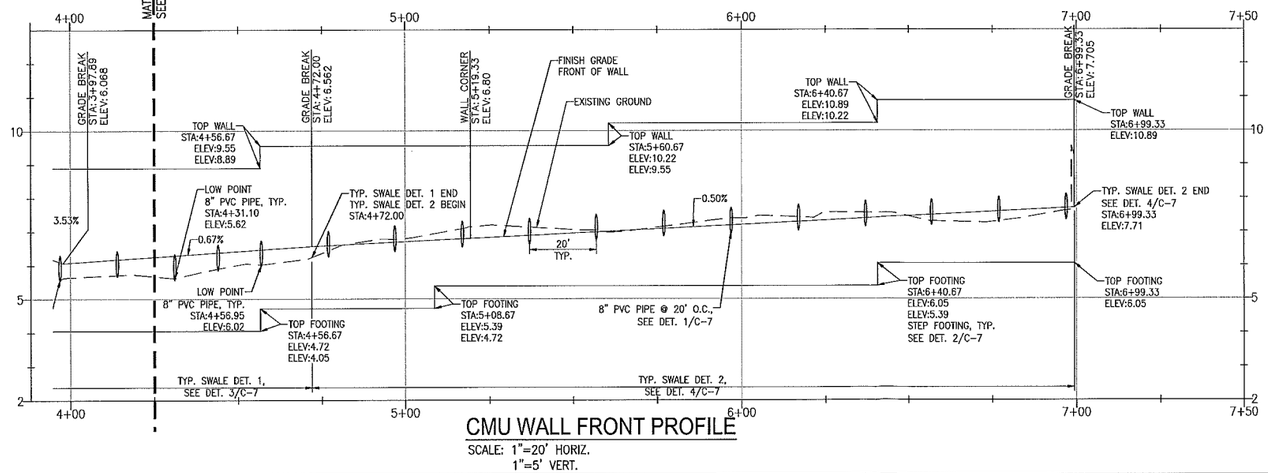


GRAPHIC SCALE:

1" = 20' 20' 10' 0 20' 40'

1" = 5' 5' 0 5' 10'

| REVISION NO. | STM. | DESCRIPTION | SHT OF | DATE |
|---|---|---|---|---|
| | | | | |

CHAD M. MCDONALD
LICENSED PROFESSIONAL ENGINEER
No. 9793-C
HAWAII, U.S.A.

This work was prepared by me or under my supervision

4/30/2016
MITSUNAGA & ASSOCIATES, INC. EXP. DATE

NOTE: Contractor to check and verify dimensions at job before proceeding with work.

DEPARTMENT OF HAWAIIAN HOME LANDS
STATE OF HAWAII

KAPAAKEA FLOOD MITIGATION IMPROVEMENTS
KAUNAKAKAI, MOLOKAI

SITE & GRADING PLAN & PROFILE 2

| | | | |
|---|---|---|---|
| MITSUNAGA & ASSOCIATES, INC. | | JOB NO. | DRAWING NO. |
| DESIGNED BY: SD | CHECKED BY: SD | P61001-13 | C-5 |
| DRAWN BY: DT | APPROVED BY: CM | DATE | SHEET 6 |
| SCALE: AS INDICATED | | DECEMBER 2015 | OF 8 SHTS |

FILE _____ DRAWER _____ FOLDER _____

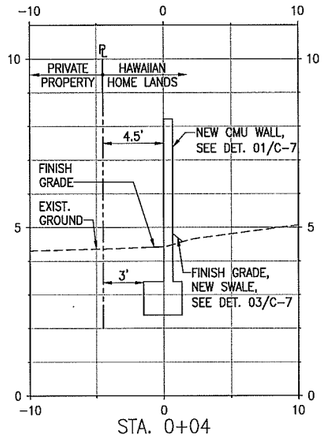

STA. 0+04

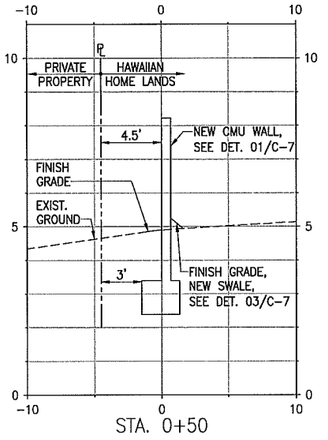

STA. 0+50

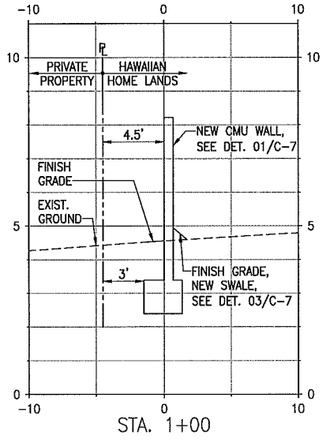

STA. 1+00

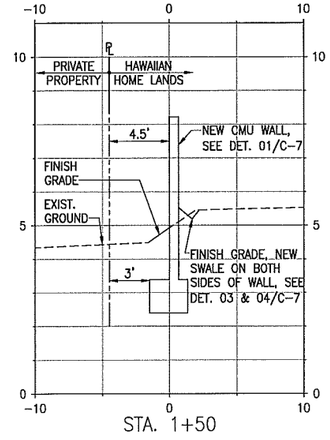

STA. 1+50

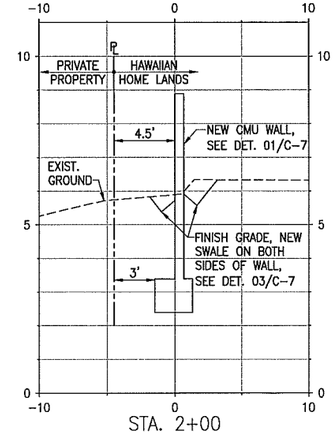

STA. 2+00

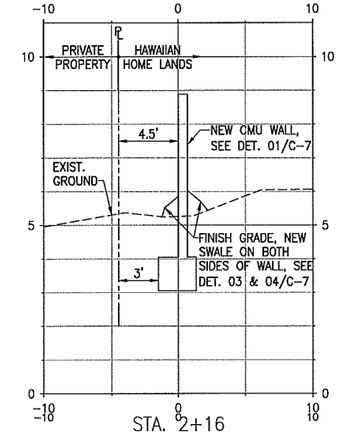

STA. 2+16

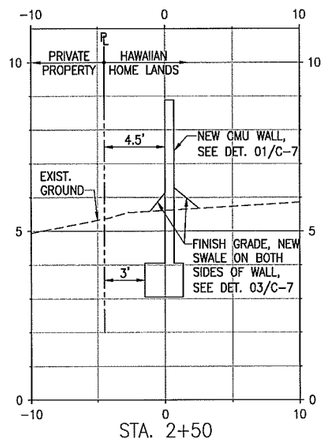

STA. 2+50

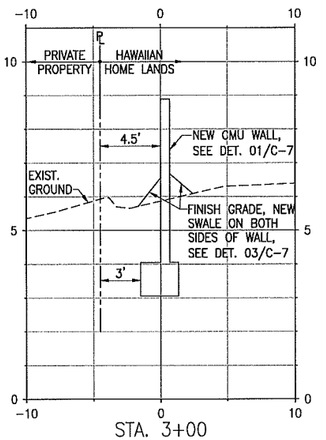

STA. 3+00

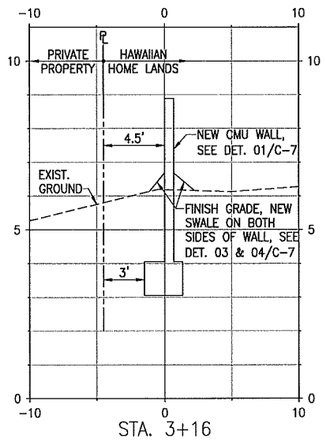

STA. 3+16

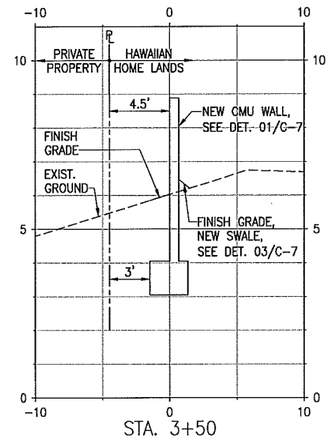

STA. 3+50

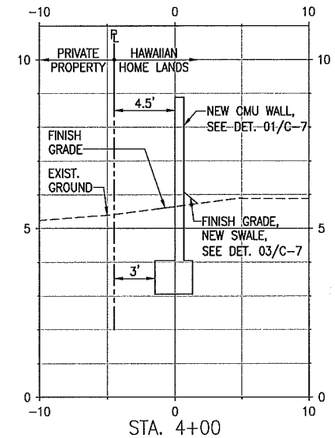

STA. 4+00

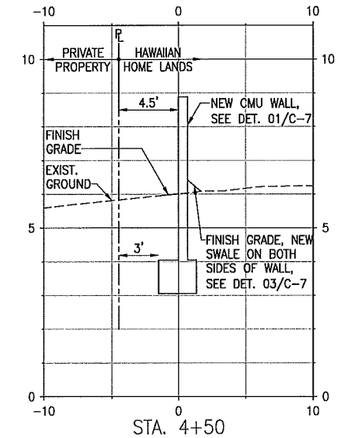

STA. 4+50

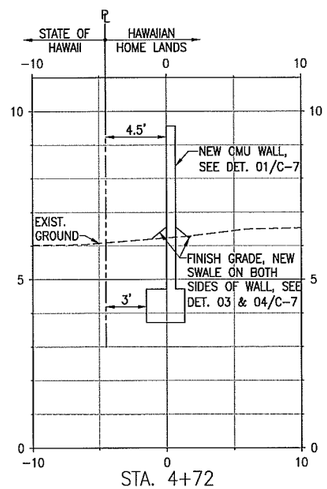

STA. 4+72

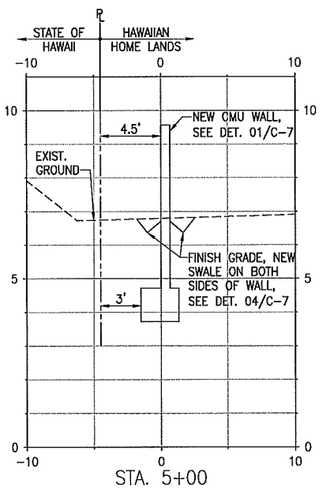

STA. 5+00

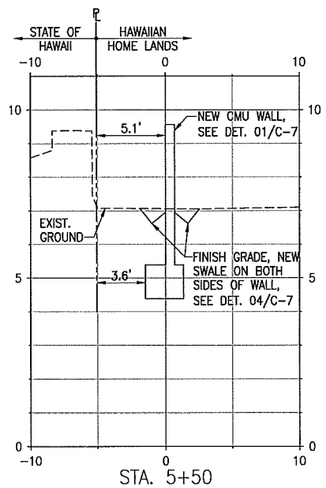

STA. 5+50

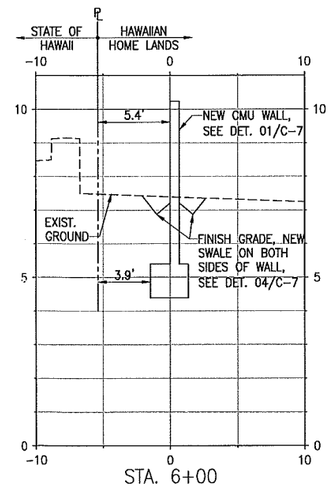

STA. 6+00

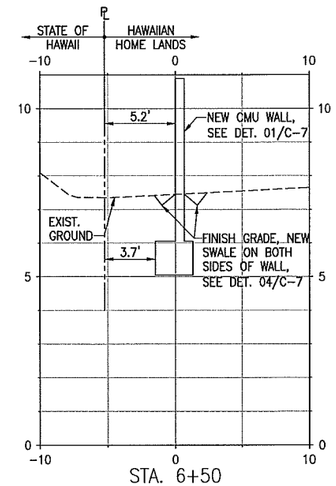

STA. 6+50

GRAPHIC SCALE:

VERT: 1" = 2'

HORIZ: 1" = 5'

| REVISION NO. | SYM. | DESCRIPTION | SHT OF | DATE |
|---|---|---|---|---|
| | | | | |

CHAD M. MCDONALD
LICENSED PROFESSIONAL ENGINEER
No. 9793-C
HAWAII, U.S.A.

This work was prepared by me or under my supervision

4/30/2016
MITSUNAGA & ASSOCIATES, INC. EXP. DATE

NOTE: Contractor to check and verify dimensions at job before proceeding with work.

DEPARTMENT OF HAWAIIAN HOME LANDS
STATE OF HAWAII

KAPAAKEA FLOOD MITIGATION IMPROVEMENTS
KAUNAKAKAI, MOLOKAI

SECTIONS

| MITSUNAGA & ASSOCIATES, INC. | | JOB NO. | DRAWING NO. |
|---|---|---|---|
| DESIGNED BY: SD | CHECKED BY: SD | P61001-13 | C-6 |
| DRAWN BY: DT | APPROVED BY: CM | DATE | SHEET 7 |
| SCALE: AS INDICATED | | DECEMBER 2015 | OF 8 SHTS |

FILE _____ DRAWER _____ FOLDER _____

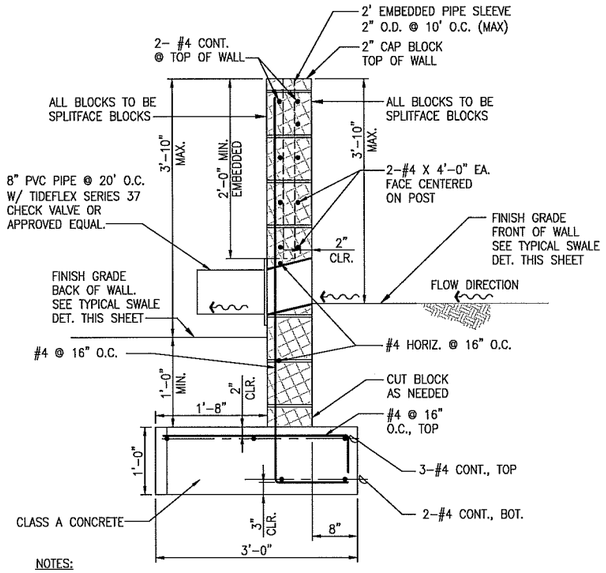


NOTES:

1. CUT MASONRY BLOCKS AT THE BOTTOM OF THE WALL TO ALIGN MORTAR JOINTS AT STEP FOOTINGS.
2. GROUT ALL MASONRY CELLS SOLID.
3. ALL BLOCKS TO BE SPLITFACE BLOCKS.

## 1 C-7 CMU WALL
SCALE: 1" = 1'-0"

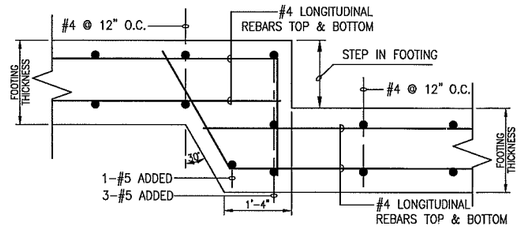


## 2 C-7 STEP FOOTING DETAIL
SCALE: 3/4" = 1'-0"

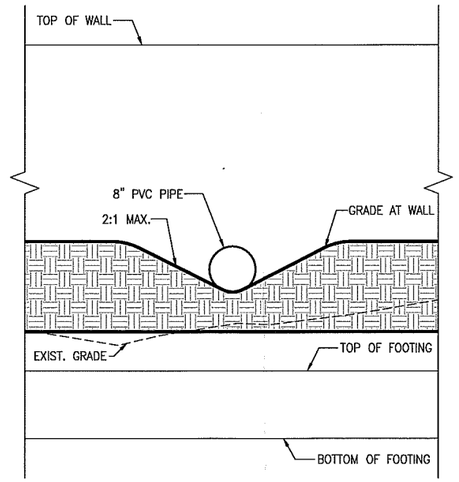


## 5 C-7 SECTION "A"-"A"
SCALE: 1" = 1'-0"

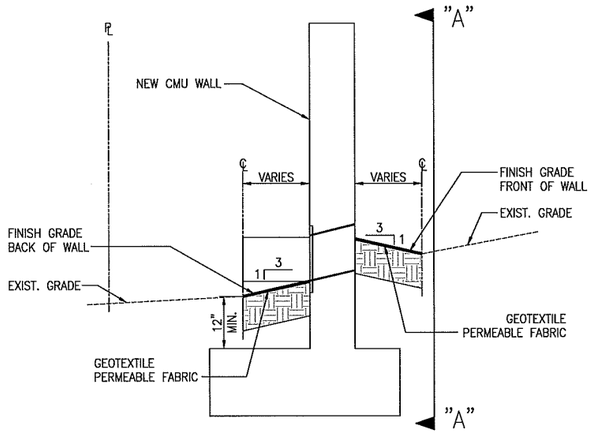


## TYPICAL SWALE DETAIL LOCATIONS VARY, SEE C-4 & C-5
3 C-7 SCALE: 1" = 1'-0"

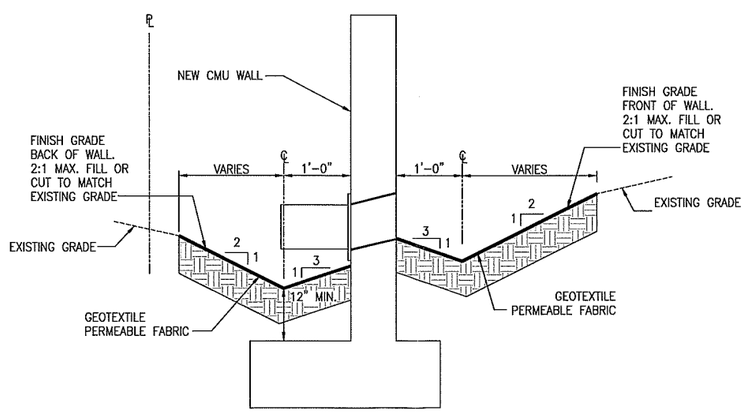


## TYPICAL SWALE DETAIL LOCATIONS VARY, SEE C-4 & C-5
4 C-7 SCALE: 1" = 1'-0"

GRAPHIC SCALE:

1" = 1'-0" 0 1' 2'

3/4" = 1'-0" 0 1' 2' 3'

| REVISION NO. | SYM. | DESCRIPTION | SHT OF | DATE |
|---|---|---|---|---|
| | | | | |
| | | | | |
| | | | | |

CHAD M. MCDONALD
LICENSED PROFESSIONAL ENGINEER
No. 9703-C
HAWAII, U.S.A.

This work was prepared by me or under my supervision

4/30/2016
MITSUNAGA & ASSOCIATES, INC. EXP. DATE

NOTE: Contractor to check and verify dimensions at job before proceeding with work.

DEPARTMENT OF HAWAIIAN HOME LANDS
STATE OF HAWAII

KAPAAKEA FLOOD MITIGATION IMPROVEMENTS
KAUNAKAKAI, MOLOKAI

DETAILS

| MITSUNAGA & ASSOCIATES, INC. | | JOB NO. | DRAWING NO. |
|---|---|---|---|
| DESIGNED BY: SD | CHECKED BY: SD | P61001-13 | C-7 |
| DRAWN BY: DT | APPROVED BY: CM | DATE | SHEET |
| SCALE: AS INDICATED | | DECEMBER 2015 | 8 OF 8 SHTS |

FILE _____ DRAWER _____ FOLDER _____

## Cheryl Okuma

**Subject:** FW: Request To Meet (Molokai Flood Mitigation Project)

**From:** Jeffrey Dack [mailto:Jeffrey.Dack@co.maui.hi.us]
**Sent:** Wednesday, July 22, 2015 12:33 PM
**To:** Cheryl Okuma <Cheryl@munekiyohiraga.com>; Karlynn Fukuda <karlynn@munekiyohiraga.com>
**Cc:** Sybil Lopez <Sybil.Lopez@co.maui.hi.us>
**Subject:** RE: Request To Meet (Molokai Flood Mitigation Project)

Cheryl and Karlynn,

I checked with Clayton after our meeting on Monday. If the project is to be carried out by DHHL we would not consider the County to have jurisdiction for the SMA. If instead the project is to be carried out by a lessee of DHHL we WOULD consider the County of have jurisdiction for the SMA. I hope this helps.

Thanks,

Jeff Dack

# APPENDIX C.

# Communication from Planning Department that County has No Jurisdiction in SMA

# APPENDIX D.

# Real Property Tax Certification of Field Book Land Sheet (Parcel 9)

TERRITORY OF HAWAII

FIELD BOOK LAND SHEET

| DESCRIPTION | | | Second DIVISION | | | |
|---|---|---|---|---|---|---|
| Lot No. 5 - Kapaakea Res. Lots | | | ZONE | SEC. | PLAT. | PARCEL |
| | | | 5 | 4 | 07 | 09 |
| OWNER | | TITLE HISTORY | | | | Area |
| ~~Hawaiian Homes Commission~~ | | | | | | 0.445 Ac |
| Lucy Malic | (H.H.C.) | H.H.C. Lease No. 2361 - 4/27/50 | | | | |

Certified to be true and correct copy of the original on file in this office

Marcy Martin, AAS, PTO

Tax Assessor

# APPENDIX E.

# Flora and Fauna Survey

# FLORA AND FAUNA SURVEY

# DEPARTMENT OF HAWAIIAN HOME LANDS

# KAPA'AKEA FLOOD MITIGATION PROJECT

# KAPA'AKEA, MOLOKA'I

by

ROBERT W. HOBDY
Environmental Consultant
Koakomo, Maui
January 2016

Prepared for:
STATE OF HAWAII
DEPARTMENT OF HAWAIIAN HOME LANDS

FLORA AND FAUNA SURVEY
DEPARTMENT OF HAWAIIAN HOME LANDS
KAPA'AKEA FLOOD MITIGATION PROJECT
KAPA'AKEA, MOLOKA'I

## INTRODUCTION

The Department of Hawaiian Home Lands (DHHL) Kapa'akea Flood Mitigation Project is located 0.75 miles to the east of Kaunakakai Town below Kamehameha V Highway (see Figure 1). The project area includes five DHHL lots (TMK (2) 5-4-07:9, 10, 11, 24, 25) that total approximately 2.5 acres and stretch from the highway down to the shoreline (see Figure 2). Bordering the project area on the west is the Koheo Wetland, on the south is the ocean, on the east are more DHHL lots within the Kapa'akea Homestead, and on the north is Kamehameha V Highway. This project calls for the construction of a concrete retaining wall between the DHHL lots and the adjacent wetland to protect the lots from potential flooding damages. This flora and fauna study was initiated by DHHL in compliance with environmental requirements of the planning process.

## SITE DESCRIPTION

The five lots within the project, range in elevation from 3 to 5 feet above sea level. The terrain is nearly level on this coastal plain. Soils are described mostly as Kealia Silt Loam with a smaller area of Mala Silty Clay near the highway (Foote et al, 1972). Vegetation is mostly of a domestic landscape type, including mowed lawns, shade trees, low hedges and a few scattered ornamentals and fruit trees (see Figure 3). Rainfall averages 12 to 15 inches per year with most occurring during the winter months (Armstrong, 1983). The proposed concrete wall along the west side of the project area would extend approximately 745 feet from near the shoreline up to the edge of the highway right-of-way and then an additional 187 feet laterally along the highway to Kapa'akea Loop Road.

## SURVEY OBJECTIVES

This report summarizes the findings of a flora and fauna survey for the DHHL Kapa'akea Flood Mitigation Project which was conducted in January 2016. The objectives of the survey were to:

1. Document what plant and animal species occur on the property or may likely occur in the existing habitat.
2. Document the status and abundance of each species.
3. Determine the presence or likely occurrence of any native flora and fauna, particularly any that are Federally listed as Threatened or Endangered. If such occur, identify what features of the habitat may be essential for these species.
4. Determine if the project area contains any special habitats which if lost or altered might result in a significant negative impact on the flora and fauna in this part of the island.

## BOTANICAL SURVEY REPORT

### SURVEY METHODS

A walk-through botanical survey was conducted for the five small subject parcels. Notes were made on species, distribution and abundance as well as on terrain and substrate.

### DESCRIPTION OF THE VEGETATION

The vegetation was typical of landscaped home site properties, with mowed lawns, shade trees, hedges and scattered ornamental plants and fruit trees. A few weedy species grew along the western boundaries near the Koheo wetland. Plants growing in pots were not recorded.

A total of 25 plant species were recorded during the course of the survey. Of these, none were species endemic to Hawaii. Three species were indigenous to Hawaii as well as to other Pacific islands: milo (*Thespesia populnea*), kīpūkai (*Heliotropium curassavicum*) and ʻekaha or birds-nest fern (*Asplenium nidus*). No Endangered or Threatened species were recorded, nor were any found that were candidates for such status.

### DISCUSSION AND RECOMMENDATIONS

Little about the vegetation that currently occupies the five residential lots within the project area is worthy of comment or concern. The absence of any Endangered or Threatened plants and the lack of any natural habitats defines the character of the project area. Of the three indigenous plants, the milo and ʻekaha have been purposely planted and are being cultivated as ornamentals, and only the widespread and common kīpūkai was found growing naturally.

The construction of the proposed concrete flood mitigation wall on a non-wetland alignment along the western edge of the project area would not have a significant negative impact on the botanical resources in this part of Molokaʻi. No recommendations regarding the botanical resources in this area are deemed necessary.

## PLANT SPECIES LIST

Following is a checklist of all those vascular plant species inventoried during the field studies. Plant families are arranged alphabetically within each of three groups: Ferns, Monocots and Dicots. Taxonomy and nomenclature of the Ferns are in accordance with Palmer (2003) and the Monocots and Dicots are in accordance with Wagner et al. (1999) and Staples and Herbst (2005).

For each species, the following information is provided:

1. Scientific name with author citation

2. Common English or Hawaiian name.

3. Bio-geographical status. The following symbols are used:

   endemic = native only to the Hawaiian Islands; not naturally occurring anywhere else in the world.

   indigenous = native to the Hawaiian Islands and also to one or more other geographic area(s).

   Polynesian = all plant species brought to Hawaii by the Polynesians in the course of their migrations.

   non-native = all those plants brought to the islands intentionally or accidentally after western contact.

4. Abundance of each species within the project area:

   abundant = forming a major part of the vegetation within the project area.

   common = widely scattered throughout the area or locally abundant within a portion of it.

   uncommon = scattered sparsely throughout the area or occurring in a few small patches.

   rare = only a few isolated individuals within the project area.

| SCIENTIFIC NAME | COMMON NAME | STATUS | ABUNDANCE |
|---|---|---|---|
| **FERNS** | | | |
| ASPLENIACEAE (Spleenwort Family) | | | |
| *Asplenium nidus* L. | ʻekaha, birds-nest fern | indigenous | rare |
| **MONOCOTS** | | | |
| ARECACEAE (Palm Family) | | | |
| *Cocos nucifera* L. | niu, coconut | Polynesian | uncommon |
| ASPARAGACEAE (Asparagus Family) | | | |
| *Cordyline fruticosa* (L.) A. Chev. | kī, tī | Polynesian | rare |
| *Dracaena reflexa* Lam. | Song-of-India | non-native | rare |
| BROMELIACEAE (Bromeliad Family) | | | |
| *Tillandsia usneoides* (L.) L. | Spanish moss, hinahina | non-native | rare |
| MUSACEAE (Banana Family) | | | |
| *Musa acuminata x balbisiana* Colla | banana | non-native | rare |
| POACEAE (Grass Family) | | | |
| *Cenchrus ciliaris* L. | buffelgrass | non-native | rare |
| *Chloris barbata* (L.) Sw. | swollen fingergrass | non-native | rare |
| *Cynodon dactylon* (L.) Pers. | Bermuda grass | non-native | common |
| *Megathyrsus maximus* (Jacq.) Morrone | Guinea grass | non-native | rare |
| **DICOTS** | | | |
| ACANTHACEAE (Acanthus Family) | | | |
| *Graptophyllum pictum* (L.) Griffith | caricture plant | non-native | rare |
| AMARANTHACEAE (Amaranth Family) | | | |
| *Chenopodium murale* L. | ʻaheahea | non-native | rare |
| ANACARDIACEAE (Mango Family) | | | |
| *Mangifera indica* L. | mango | non-native | uncommon |
| ASTERACEAE (Sunflower Family) | | | |
| *Pluchea carolinensis* (Jacq.) G. Don | sourbush | non-native | uncommon |
| *Pluchea indica* (L.) Less. | Indian fleabane | non-native | common |
| BATACEAE (Saltwort Family) | | | |
| *Batis maritima* L. | pickleweed | non-native | uncommon |
| BORAGINACEAE (Borage Family) | | | |
| *Heliotropium curassavicum* L. | kīpūkai | indigenous | rare |
| FABACEAE (Pea Family) | | | |
| *Desmanthus pernambucanus* (L.) Thellung | slender mimosa | non-native | rare |
| *Leucaena leucocephala* (Lam.) de Wit | koa haole | non-native | rare |
| *Prosopis pallida* (Humb. & Bonpl. Ex Willd.) Kunth | kiawe | non-native | common |
| *Samanea saman* (Jacq.) Merr. | monkeypod | non-native | uncommon |
| MALVACEAE (Mallow Family) | | | |
| *Hibiscus x rosa-sinensis* L. | hybrid hibiscus | non-native | uncommon |
| *Thespesia populnea* (L.) Correa | milo | indigenous | rare |

| SCIENTIFIC NAME | COMMON NAME | STATUS | ABUNDANCE |
|---|---|---|---|
| POLYGONACEAE (Buckwheat Family) | | | |
| *Coccoloba uvifera* (L.) L. | sea grape | non-native | rare |
| RUTACEAE (Citrus Family) | | | |
| *Citrus aurantiifolia* (Christman) Swingle | lime | non-native | rare |

# FAUNA SURVEY REPORT

## SURVEY METHODS

A fauna survey was conducted at the same time as the botanical survey. Observations were made using binoculars and listening to vocalizations. Notes were made on species, abundance, activities and location as well as observations of trails, tracks, scat and signs of feeding. In addition, an evening visit was made to the area to record crepuscular activities and vocalizations and to see if there was any evidence of occurrence of the Hawaiian hoary bat (*Lasiurus cinereus semotus*) in the area.

## RESULTS

### MAMMALS

Three non-native mammal species were observed during the course of the survey. Taxonomy and nomenclature follow Tomich (1986). These were all domesticated animals including dogs (*Canis familiaris*), cats (*Felis catus*) and a pig (*Sus scropha*). Other mammals one might expect to encounter on the property include the mongoose (*Herpestes auropunctatus*), rats (*Rattus rattus*) and mice (*Mus domesticus*). Rats and mice eat seeds, insects and herbaceous vegetation and mongoose and cats hunt for rodents and birds.

A special effort was made to look for the native Hawaiian hoary bat by making an evening survey of the area. When present in an area these bats can be easily identified as they forage for insects, their distinctive flight patterns clearly visible in the glow of twilight. No evidence of such activity was observed though visibility was excellent. In addition a bat detecting device (Batbox IIID) was employed, set to the frequency of 27,000 Hertz, which these bats are known to use when echolocating for nocturnal flying insects. No bats were detected with the use of this device.

### BIRDS

There were moderate amounts of birdlife observed in the project area during four site visits. Eleven species were recorded including ten non-native species and one migratory winter visitor. Taxonomy and nomenclature follow the American Ornithologists' Union (2014). Common species were zebra dove (*Geopelia striata*), chicken (*Gallus gallus*), common myna (*Acridotheres tristis*), spotted dove (*Streptopelia chinensis*) and pigeon (*Columba livia*). Uncommon were the house sparrow (*Passer domesticus*), cattle egret (*Bubulcus ibis*) and gray francolin (*Francolinus pondicerianus*). Rare species included the African silverbill (*Lonchurus cantans*), Pacific golden-plover or kolea (*Pluvialis fulva*) and northern cardinal (*Cardinalis cardinalis*). A few other non-native birds may occasionally occur in the project area, but this habitat is not suitable for Hawaii's native forest birds which presently occur only in higher elevation native forests.

The adjacent Kōheo Wetland is a very different habitat than the project area and it consistently supports a number of waterbirds and shorebirds including the indigenous 'auku'u or black-crowned night-heron (*Nycticorax nycticorax hoactli*) and the endemic and Endangered Ae'o or Hawaiian stilt (*Himantopus mexicanus knudseni*) and the 'alae ke'oke'o or Hawaiian coot (*Fulica alai*). Migratory species include the 'ūlili or wandering tattler (*Tringa incana*), long-billed dowitcher (*Limnodromus scolopaceus*), 'akekeke or ruddy turnstone (*Arenaria interpres*), hunakai or sanderling (*Calidris alba*), kioea or bristle-thighed curlew (*Numenius tahitiensis*) and the semipalmated plover (*Charadrius*

*semipalmatus*). These waterbirds and shorebirds are nearly obligates to these habitats and rarely venture into upland habitats. None were observed in the project area.

INSECTS

There was a moderate diversity of insects observed in the project area. Ten species of non-native insects were recorded during four site visits. Taxonomy and nomenclature follow Nishida (1992). Just two species were of common occurrence, the western pygmy blue butterfly (*Brephidium exile*) and the monarch butterfly (*Danaus plexippus*). Uncommon were the southern house mosquito (*Culex quinquefasciatus*), the pill bug (*Porcellio laevis*) and the long tail blue butterfly (*Lampides boeticus*). No native insects or important host plants of native insects were found during the survey.

## DISCUSSION AND RECOMMENDATIONS

The fauna survey of the DHHL Kapa'akea Wetland Mitigation Project area failed to find a single native mammal, bird or insect species, and no special habitat for any native animal species was found either. The whole project area consists of fully occupied residential properties.

The adjacent Kōheo Wetland, however is habitat for two Endangered waterbirds, the ae'o and the 'alae ke'oke'o, and this habitat deserves consideration. This wetland has come under a cooperative agreement with a Moloka'i entity that is pursuing a number of habitat enhancements and other protective measures for these birds. The wetland has enough of a buffer that allows the birds to coexist with surrounding human activities in relative peace.

The construction of a cement wall within 150 feet of the wetland, however, will produce a heightened level of disturbance for a time. It is recommended that work activities be monitored to minimize unnecessary levels of equipment and human noise so as not to unduly disturb the birds.

## ANIMAL SPECIES LIST

Following is a checklist of the animal species inventoried during the field work. Animal species are arranged in descending abundance within three groups: Mammals, Birds and Insects. For each species the following information is provided:

1. Common name

2. Scientific name

3. Bio-geographical status. The following symbols are used:

   endemic = native only to Hawaii; not naturally occurring anywhere else in the world.

   indigenous = native to the Hawaiian Islands and also to one or more other geographic area(s).

   non-native = all those animals brought to Hawaii intentionally or accidentally after western contact.

   migratory = spending a portion of the year in Hawaii and a portion elsewhere. In Hawaii the migratory birds are usually in the overwintering/non-breeding phase of their life cycle.

4. Abundance of each species within the project area:

   abundant = many flocks or individuals seen throughout the area at all times of day.

   common = a few flocks or well scattered individuals throughout the area.

   uncommon = only one flock or several individuals seen within the project area.

   rare = only one or two seen within the project area.

| SCIENTIFIC NAME | COMMON NAME | STATUS | ABUNDANCE |
|---|---|---|---|
| **MAMMALS** | | | |
| *Felis catus* L. | domestic cat | non-native | uncommon |
| *Canis familiaris* L. | domestic dog | non-native | uncommon |
| *Sus scrofa* L. | domestic pig | non-native | rare |
| | | | |
| **BIRDS** | | | |
| *Geopelia striata* L. | zebra dove | non-native | common |
| *Gallus gallus* L. | chicken | non-native | common |
| *Acridotheres tristis* L. | common myna | non-native | common |
| *Streptopelia chinensis* Scopoli | spotted dove | non-native | common |
| *Columba livia* Gmelin | rock dove, pigeon | non-native | common |
| *Passer domesticus* L. | house sparrow | non-native | uncommon |
| *Bubulcus ibis* L. | cattle egret | non-native | uncommon |
| *Francolinus pondicerianus* Gmelin | gray francolin | non-native | uncommon |
| *Lonchura cantans* Gmelin | African silverbill | non-native | rare |
| *Pluvialis fulva* Gmelin | kolea, Pacific golden-plover | migratory | rare |
| *Cardinalis cardinalis* L. | northern cardinal | non-native | rare |

| SCIENTIFIC NAME | COMMON NAME | STATUS | ABUNDANCE |
|---|---|---|---|
| **INSECTS** | | | |
| Order ARANAE - true spiders | | | |
| SALTICIDAE (Jumping Spider Family) | | | |
| *Menemerus bivittatus* Dufour | gray wall jumper | non-native | rare |
| Order DIPTERA - flies | | | |
| CULICIDAE (Mosquito Family) | | | |
| *Culex quinquefasciatus* Say | southern house mosquito | non-native | uncommon |
| SYRPHIDAE (Hoverfly Family) | | | |
| *Ornidia obesa* Fabricius | green hoverfly | non-native | rare |
| Order HYMENOPTERA - bees, wasps, ants | | | |
| FORMICIDAE (Ant Family) | | | |
| *Pheidole megacephala* Fabricius | big-headed ant | non-native | rare |
| Order ISOPODA - woodlice | | | |
| PORCELLIONIDAE (Pill Bug Family) | | | |
| *Porcellio laevis* Latreille | pill bug | non-native | uncommon |
| Order LEPIDOPTERA - butterflies, moths | | | |
| LYCAENIDAE (Gossamer-winged Butterfly Family) | | | |
| *Brephidium exile* Boisduval | western pygmy blue | non-native | common |
| *Lampides boeticus* L. | long tail blue | non-native | uncommon |
| NYMPHALIDAE (Brush-footed Butterfly Family) | | | |
| *Danaus plexippus* L. | monarch butterfly | non-native | common |
| PAPILIONIDAE (Swallowtail Butterfly Family) | | | |
| *Papilio xuthus* L. | Asian swallowtail | non-native | rare |
| Order ORTHOPTERA - grasshoppers, crickets | | | |
| ACRIDIDAE (Grasshopper Family) | | | |
| *Schistocerca nitens* Thunberg | graybird grasshopper | non-native | rare |

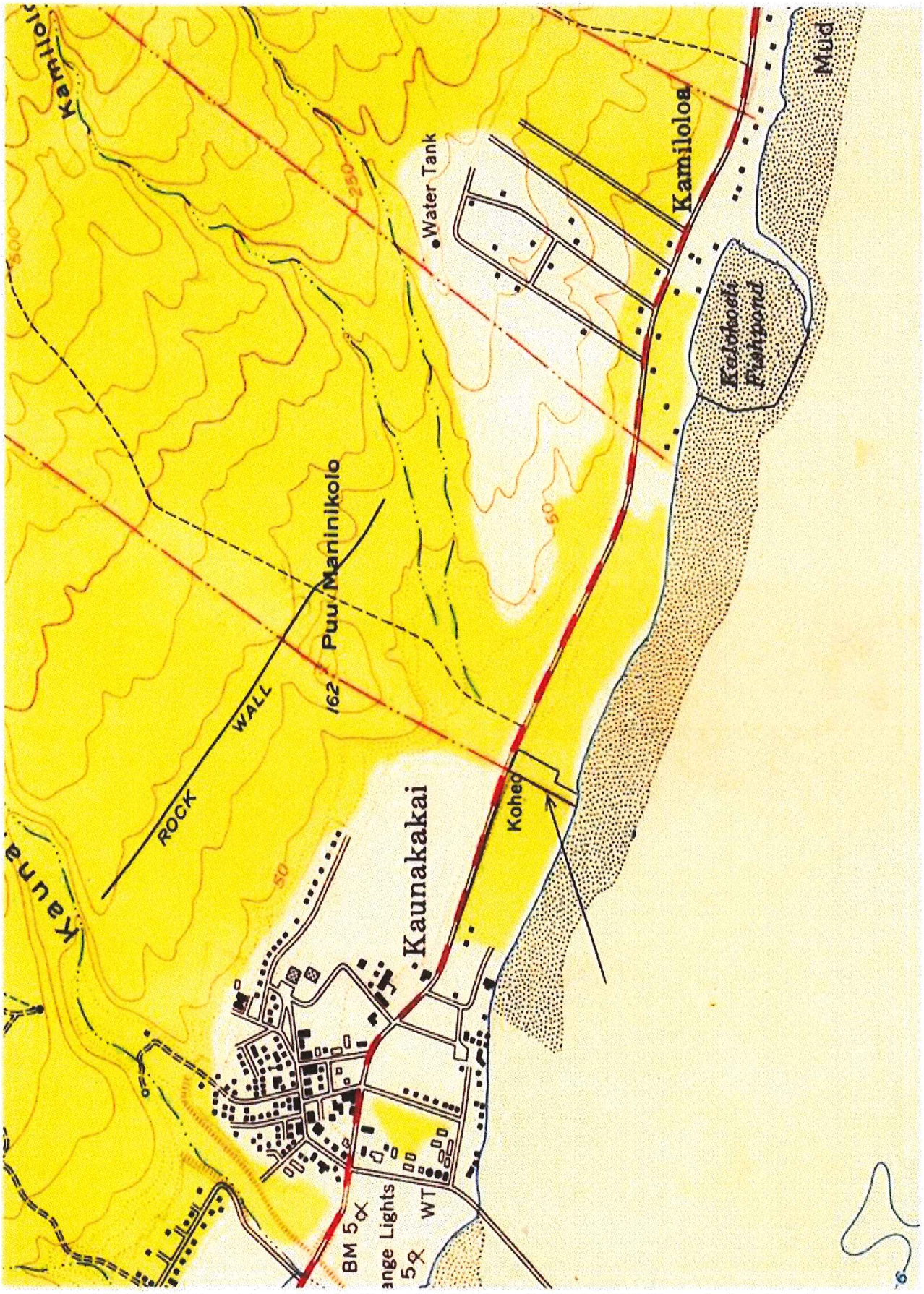


Figure 1. DHHL Kapa'akea Flood Mitigation Project (1952 USGS Kaunakakai Quadrant Map)

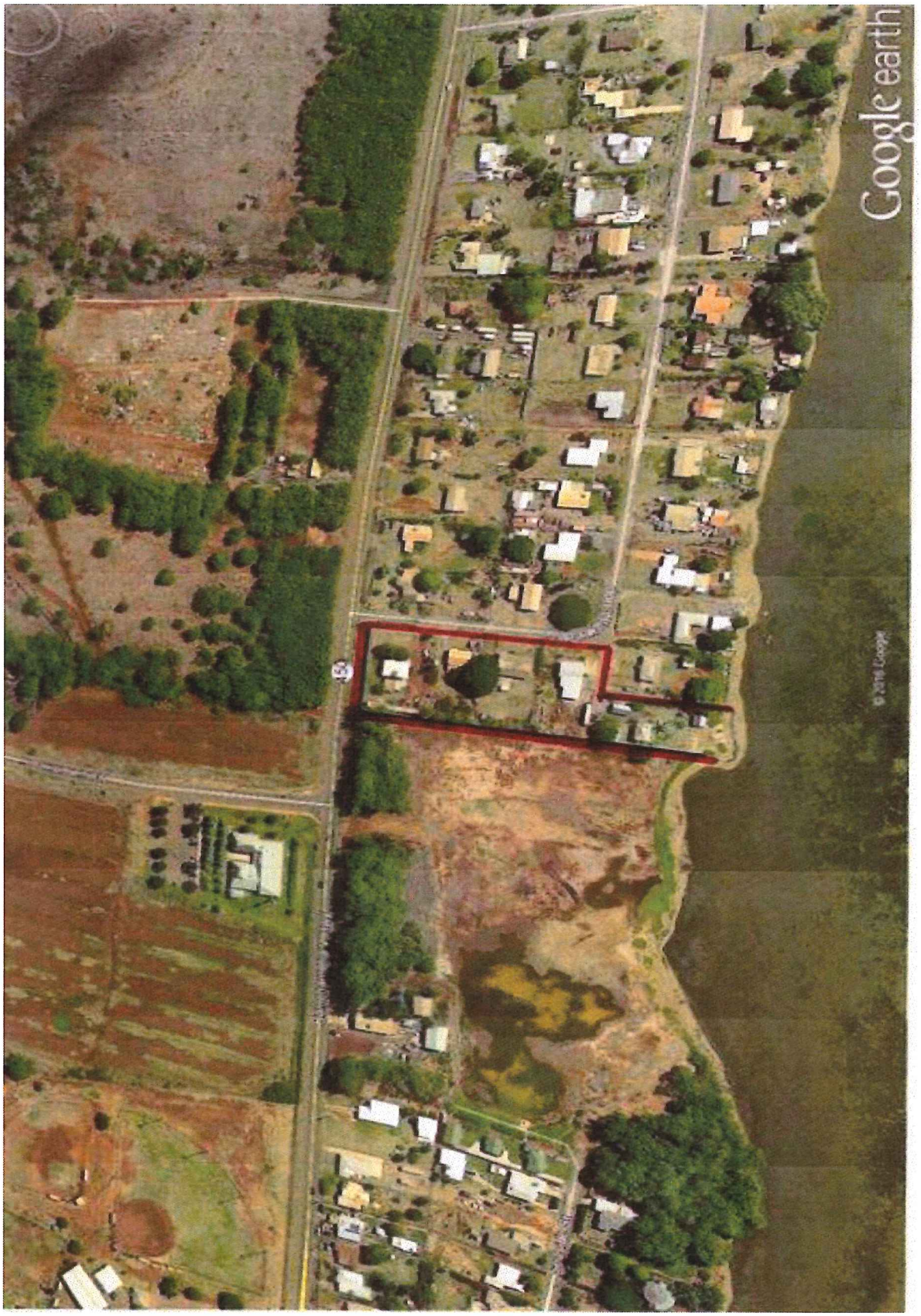


Figure 2.

_____ DHHL Kapa'akea Flood Mitigation Project boundary

_____ Proposed concrete wall along the west and north project boundaries



Figure 3. View northeast across the project boundary into the DHHL lots, showing their developed residential character

## Literature Cited


American Ornithologists' Union 2014. Check-list of North American Birds. 7th edition. American Ornithologists' Union. Washington D.C.

Armstrong, R. W. (ed.) 1983. Atlas of Hawaii. (2nd. ed.) University of Hawaii Press.

Foote, D.E. , E.L. Hill, S. Nakamura, and F. Stephens. 1972. Soil survey of the islands of Kauai, Oahu, Maui, Molokai, and Lanai, State of Hawaii. U.S. Dept. of Agriculture, Soil Conservation Service. Washington, D.C.

Nishida, G.M., G.A. Samuelson, J.S. Strazanac, K.S. Kami. 1992. Hawaiian Terrestrial Arthropod Checklist. Hawaii Biological Survey.

Staples, G.W., D.R. Herbst. 2005. A Tropical Garden Flora. Bishop Museum Press. Honolulu.

Tomich, P.Q. 1986. Mammals in Hawaii. Bishop Museum Press, Honolulu.

U.S. Fish and Wildlife Service. 1999. Endangered and threatened wildlife and Plants. Listings and Occurrences for Hawaii. www.fws.gov/endangered

Wagner, W. L., D.R. Herbst, and S. H. Sohmer. 1999. Manual of the flowering plants of Hawai'i. University of Hawai'i Press and Bishop Museum Press. Honolulu.

# APPENDIX F.

# Archaeological Assessment Report

# FINAL—Archaeological Assessment in Support of the Department of Hawaiian Homelands Kapa'akea Flood Mitigation Improvements, Kapa'akea Ahupua'a, Kona District, Island of Moloka'i, Hawai'i

**TMK (2) 5-4-007:009, 010, 011, 024, and 025**

**Prepared For:**

Mitsunaga & Associates, Inc.
747 Amana Street, Suite 216
Honolulu, HI 96814

**Prepared By:**

David Byerly, BA
and
Patrick O'Day, PhD

Garcia and Associates
146 Hekili St., Suite 101
Kailua, Hawai'i 96734

Hawai'i SHPD Permit No. 15-20

GANDA Report No. 2341-1

GANDA

13 October 2015

## MANAGEMENT SUMMARY

At the request of Mitsunaga and Associates, Inc., Garcia and Associates conducted an Archaeological Inventory Survey (AIS) with systematic subsurface testing at TMKs (2) 5-4-007:009, 010, 011, 024, and 025 in support of the Department of Hawaiian Homelands Kapa'akea Flood Mitigation Improvements Project. The project footprint included a 240 meter long corridor along the eastern and northern boundaries of the Kapa'akea Homesteads. The primary objective of the AIS was to determine the presence or absence of cultural resources within the flood mitigation improvements footprint, systematically document all cultural resources identified, and evaluate identified cultural resources for significance.

The AIS was conducted by the Principal Investigator, Patrick O'Day, PhD, and produced no evidence of traditional Hawaiian or historic cultural resources.

## CONTENTS


Management Summary ..... i
List of Figures ..... iv
List of Tables ..... iv

1.0 INTRODUCTION ..... 1
1.1 Project Authority ..... 1
1.2 Project Location ..... 1
1.3 Personnel Qualifications and Field Schedule ..... 1

2.0 ENVIRONMENTAL, HISTORICAL, AND ARCHAEOLOGICAL CONTEXT ..... 5
2.1 Physical Environment ..... 5
2.2 Pre-Contact Occupation ..... 7
2.3 Post-Contact Period ..... 8
2.3.1 Historic Land Tenure ..... 8
2.3.2 Land Use and Development ..... 9
2.3.3 Kapa'akea Homestead ..... 11
2.4 Previous Archaeology ..... 12
2.4.1 Archaeological Expectations ..... 17

3.0 METHODS ..... 18
3.1 Consultation ..... 18

4.0 RESULTS ..... 19
4.1 Surface Survey ..... 19
4.1.1 Section 1 Survey ..... 19
4.1.2 Section 2 Survey ..... 19
4.2 Subsurface Testing ..... 19
4.2.1 Section 1 Testing ..... 24
4.2.1.1 TU-1 ..... 24
4.2.1.2 TU-3 ..... 26
4.2.1.3 TU-8 ..... 27
4.2.1.4 Section 1 Conclusion ..... 28
4.2.2 Section 2 Testing ..... 28
4.2.2.1 TU-12 ..... 28
4.2.2.2 TU-13 ..... 28
4.2.2.3 Section 2 Conclusion ..... 31
4.3 Consultations ..... 32

5.0 CONCLUSIONS ..... 33

6.0 REFERENCES ..... 34

APPENDIX A: ADDITIONAL STRATIGRAPHIC PROFILES ..... 37

## FIGURES

Figure 1. Map of construction footprint. 2
Figure 2. Location of project area. 3
Figure 3. *Ahupua'a* boundaries. 4
Figure 4. Project area soils. 6
Figure 5. 1900 American Sugar Company map of Moloka'i Island. 11
Figure 6. Registered Map 3093 showing Kapa'akea Residence Lots, date unknown. 13
Figure 7. 1950 USGS aerial photograph of project area. 14
Figure 8. 1964 USGS aerial photograph of project area. 14
Figure 9. Previous archaeological work near the project area. 16
Figure 10. Sections 1 and 2 of project area, with modern rock wall in Section 2. 20
Figure 11. Coastal mud flat west of project area, facing northwest. 21
Figure 12. Coastline at southern end of the project area, facing southeast. 21
Figure 13. Rock and concrete wall, facing north. 22
Figure 14. Degraded section of wall in project area, facing west. 22
Figure 15. Section of restacked wall along Kapa'akea Loop Road, facing east. 23
Figure 16. Locations of test units in the project area. 23
Figure 17. Profile and photograph of north wall of TU-1. 25
Figure 18 Profile and photograph of north wall of TU-3. 26
Figure 19. Profile and photograph of west wall of TU-8. 27
Figure 20. Profile and photograph of east wall of TU-12. 30
Figure 21. Profile and photograph of southeast wall of TU-13. 31

## TABLES

Table 1. Previous Archaeological Investigations Conducted in Vicinity of the Project Area 15
Table 2. Stratigraphic Description for TU-1–11, Section 1 25
Table 3. Stratigraphic Description for TU-12–13, Section 2 29

# 1.0 INTRODUCTION

At the request of Mitsunaga and Associates, Inc., Garcia and Associates conducted an Archaeological Inventory Survey (AIS) with systematic subsurface testing at TMKs (2) 5-4-007:009, 010, 011, 024, and 025 in support of the Department of Hawaiian Homelands (DHHL) Kapa'akea Flood Mitigation Improvements Project. The primary objective of the AIS was to determine the presence or absence of cultural resources within flood improvements footprint, systematically document all cultural resources identified, and evaluate identified cultural resources for significance.

The flood mitigation project will involve the installation of a concrete and cinder block wall and footing that will extend from the shoreline to the south side of Kamehameha V Highway (Figure 1). The footing for the wall will extend two feet under the ground surface and the finished wall will be approximately three feet high. Construction for this project will involve clearing and grading of the footprint and excavation of a trench up to 30 inches deep for the wall's foundation.

This report includes a description of the project, descriptions of environmental and historical contexts, and a review of previous archaeology conducted in the area. Subsequent sections present field methodologies used during the archaeological inventory survey and subsurface testing. This is followed by survey results and conclusions sections.

## 1.1 Project Authority

This AIS was conducted in accordance with the Hawai'i Revised Statutes §6E-8, Review of Effect of Proposed State Projects, and Hawai'i Administrative Rules §13-276, Rules Governing Standards for Archaeological Inventory Surveys and Reports. Since no cultural properties were documented during the archaeological inventory survey, this document is submitted as an Archaeological Assessment in accordance with HAR §13-276-5.

## 1.2 Project Location

The project area is located on DHHL's Kapa'akea Homesteads at the west end of Kapa'akea Loop on the southern coast of Moloka'i (Figure 2). A portion of the project area is on the northwest boundary of Kapa'akea Ahupua'a (Figure 3) and is approximately 1 kilometer (km) east of Kaunakakai Town center.

The 4.5 meter (m) wide construction footprint starts from the shoreline at the southwest corner of an oceanfront lot and runs 188 m in a northeasterly direction to the northwest corner of a lot fronting Kamehameha V Highway and covers 0.27 acres (0.11 hectares). From this point, the footprint turns 90 degrees to the east and runs along the southern edge of Kamehamea V Highway for 55 m to the Kapa'akea Loop Road intersection.

## 1.3 Personnel Qualifications and Field Schedule

Patrick O'Day, PhD., served as the Principal Investigator. Dr. O'Day meets the professional qualifications outlined in Hawai'i Administrative Rules §13-281-3 and is permitted to conduct archaeological investigations under Hawai'i State Historic Preservation Division Permit (SHPD) No. 15-20. Archaeological field investigations were conducted by Dr. O'Day on 30 July 2015.

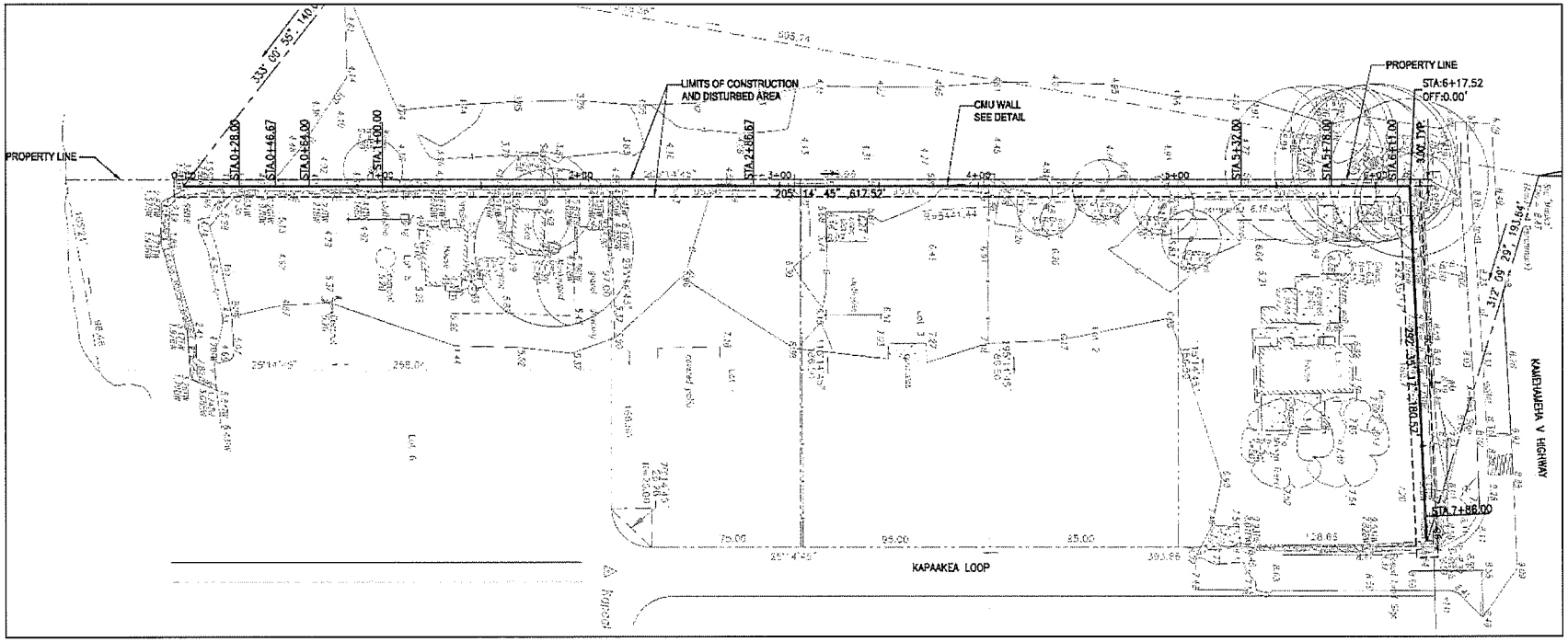


**Figure 1. Map of construction footprint.**

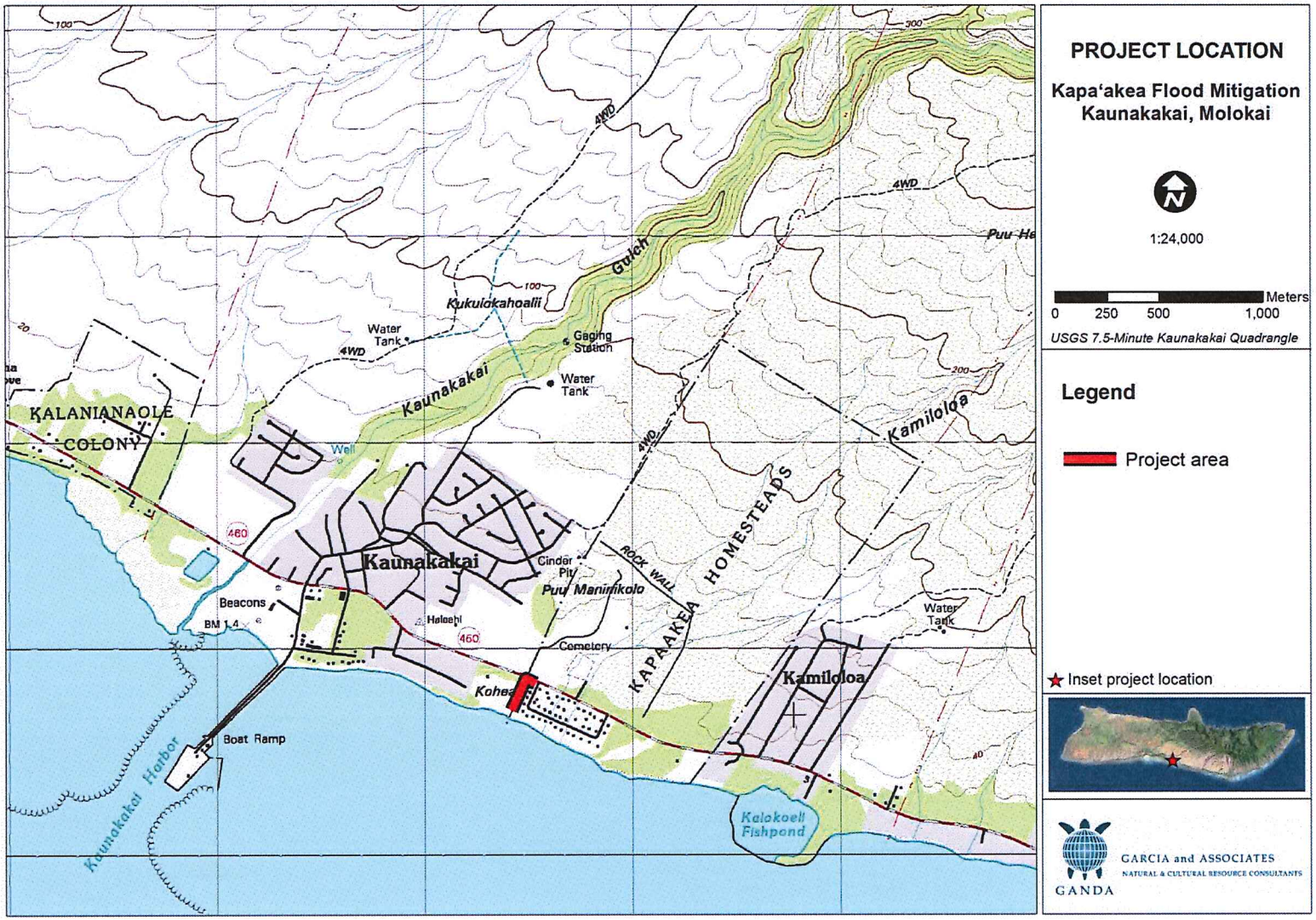


**Figure 2. Location of project area.**

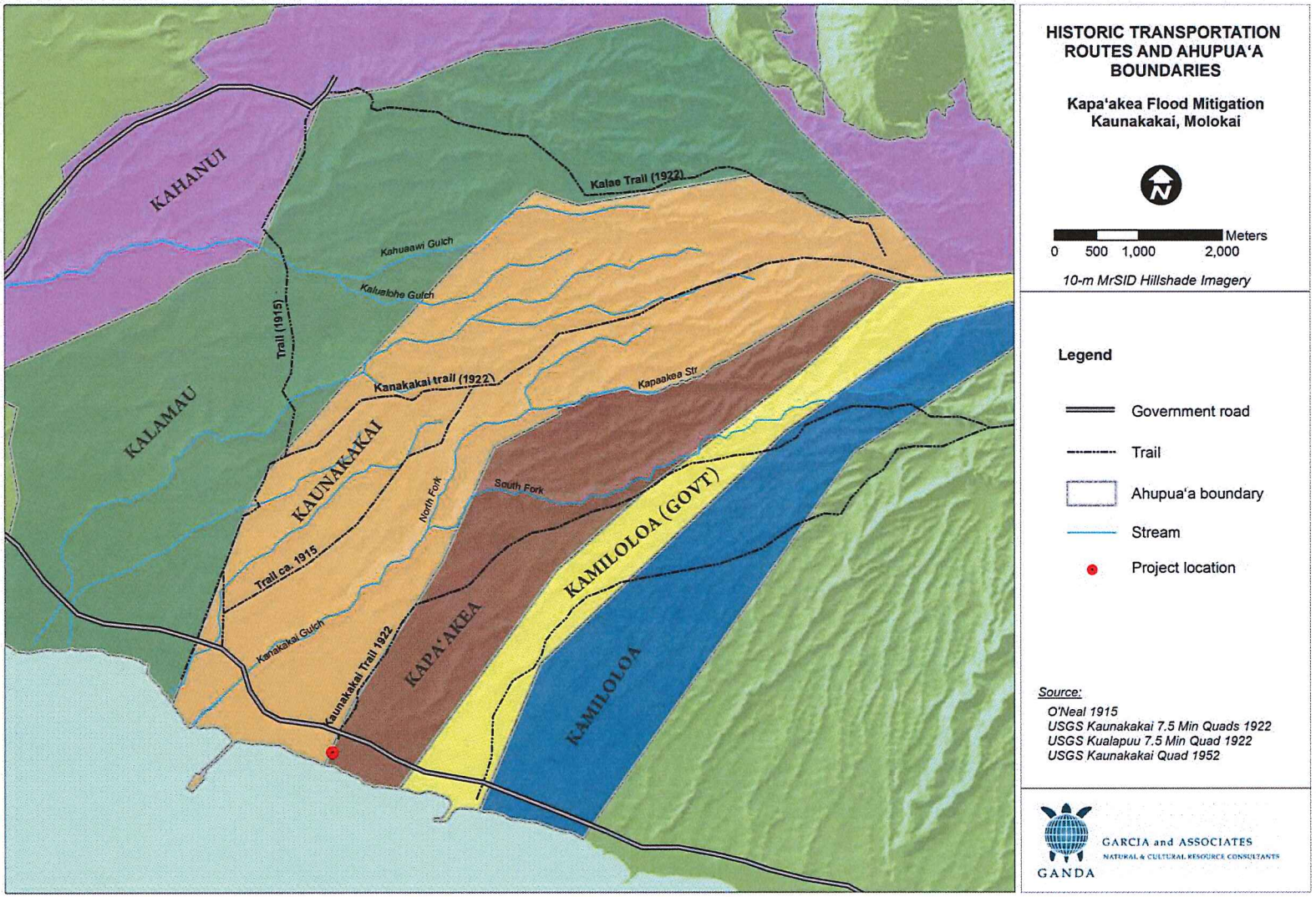


**Figure 3.** ***Ahupua'a*** **boundaries.**

## 2.0 Environmental, Historical, and Archaeological Context

This section of the report presents the environmental, historical, and archaeological background information for the project area as a means to provide context for the archaeological assessment. A critical review of this information is used to determine and anticipate what types of archaeological features may be present in the project area.

### 2.1 Physical Environment

Moloka'i was formed by two main shield volcanoes that overlapped in the center of the island approximately 1.8 million years ago (Sherrod et al. 2007). Moloka'i's southeast, or leeward side, is characterized by gently sloping uplands incised by numerous small streams leading out to a low-lying, relatively narrow coastal terrace formed by a high sea level stand about 3000 years ago. The southeast shore is fronted by narrow sand beaches bordered by a shallow reef-flat and well-developed offshore fringing reef. This environment was conducive to the traditional construction of fishponds that line Moloka'i's southern shore. Currently many of these ponds, including Kapa'akea Pond (located 650 m southeast of the project area), are infilled by terrigenous sediment transported from upslope and colonized by mangroves.

Soils in the project area are classified as Kealia Silt Loam (KMW) (USDA 2013) (Figure 4). Kealia Silt Loam is a low-lying coastal soil characterized by moderately rapid permeability and slow to very slow runoff. The high salt content in this poorly drained soil results in the accumulation of salt crystals on low areas after heavy rainfall.

Before colonization, the Kona slopes and coast were probably covered with dry mesic forest dominated by *Pritchardia* (*loulu*); the only member of the Arecaceae family native to Hawai'i. Traditional settlers significantly altered their environment. Much of the island's lowland forests were cleared for agricultural pursuits and native vegetation was replaced with Polynesian introductions. In traditional times, the lower slopes of the southern coast were probably vegetated in *lama* (*Diospyros sandwicensis*), *'akoko* (*Chamaesyce* sp.), and *kulu'i* (*Nototrichium* sp.) (Tuggle 1993b:9). When westerners first sighted Moloka'i in 1778, the land rising back from the southwest coast "appeared to be entirely without wood" (Cook 1785, in Summers 1971:21).

Moloka'i's southern coast has been considerably altered since island colonization. Deforestation and extensive terracing and stream diversion for traditional and commercial agriculture on the upland slopes have drastically altered the traditional landscape. Further alteration of Moloka'i's southern landscape was caused by the historic introduction of herbivores, particularly goats.

Mean annual rainfall recorded at the Molokai Ranch Rainfall Station No. 536 (one kilometer northwest of the project area) is 338.3 millimeters with 83% of the precipitation falling between November and March (Giambelluca et al 2013).




**Figure 4. Project area soils.**

## 2.2 Pre-Contact Occupation

The following Hawaiian settlement history of Moloka'i is based on paleoenvironmental studies, archaeological research, and oral histories. The chronological framework follows the settlement model of the Hawaiian Islands established by Kirch (2010).

Paleoenvironmental studies on Moloka'i suggest human colonization of the island occurred between AD 800 and 1200 during Hawai'i's Foundation Period (Denham et al. 1999). Paleocoring samples taken along the southern coast indicate a decline of the endemic dry lowland forests with a corresponding rise in sedge and grass pollen and the first occurrence of substantial charcoal flecking (Denham et al. 1999). This large-scale disturbance of the native ecosystem is interpreted to reflect land clearance associated with cultivation (Denham et al. 1999:54)

The first evidence of temporary occupation along Moloka'i's leeward coast is a radiometric date range of calAD 1219–1322 (73.0%), 1347–1393 (22.4%) (Beta-7564) from a charcoal sample collected in a sandy midden in the Mālama Cultural Park located 1.2 km northwest of the current study area (Athens 1983; Weisler 1989:126). As shown by a radiocarbon assay of calAD 1265–1313, (68.9%), 1358–1388 (26.55) (B-359995) associated with a fire pit in Mapulehu (Byerly and Liston 2013), the southeast coastal lowlands may have been semi-permanently occupied during the Early Expansion Period (AD 1200–1400).

The subsequent centuries of this period see the appearance of a diverse range of domestic architectural features in Moloka'i's archaeological record. Basalt quarries began to be used for the procurement of lithic material and tool manufacture (Dixon et al. 1994; Weisler 2011). The first evidence of marine resource and avifauna exploitation (Weisler 1989) as well as the spread of small scale cultivation (Kirch 2002) also dates to this early period.

During Moloka'i's Late Expansion Period (AD 1400–1650), there is strong archaeological evidence for the intensification of subsistence practices, increases in population, and the early evidence of ritual practices (McCoy 2007). Moloka'i's chief agricultural product was sweet potato (*Ipomoea batatas*) which was grown throughout the island (Summers 1971).

Around AD 1450 (Denham et al. 1999) on Moloka'i's southern shore, stone fishtraps may have been expanded into fishponds (*loko i'a*) (Summers 1971; Kikuchi 1976; Kelly 1989). Primary species produced in the roughly 70 stone ponds lining a 20 mile stretch of the island's south and southeast coastline included mullet (*Mugil cephalis*), *'ama'ama* and milkfish (*Chanos chanos*), and *awa*. The inland Kapa'akea Pond is 650 m southeast of the current study area. However, this 5.45 acre pond is filled in with silt and is overgrown with vegetation.

The following centuries of the Proto-Historic Period (AD 1650–1795) brought internal wars for domination of the island between the Ko'olau and Kona chiefs. This conflict may have arisen over the significant economic advantage offered by access rights to the southeast coast's rich fishing grounds, especially when the waters of the Ko'olau district were inaccessible due to rough waters for half the year (Athens 1985:6). After many intra-island battles, the Kona District chief, Paepae, beseeched the O'ahu chief, Kuali'i, for assistance. With the combined strength of the Kona warriors and Kuali'i's army, the Ko'olau warriors were defeated and its chiefs were forced to surrender their lands to O'ahu (Fornander 1916–1917:418). Rule over the island of Moloka'i shifted from island to

island. Ultimately, control of Moloka'i shifted from O'ahu to Maui under the renowned chief Kahikili, a rival of the Hawai'i Island chiefs (Kamakau 1961:133).

## 2.3 Post-Contact Period

On November 26, 1778, sailors from Captain Cook's expedition were the first Europeans known to sight Moloka'i Island. A year later in 1779, the expedition passed very close to Moloka'i and Captain Cook wrote the following comments:

> Morotoi is only two leagues and a half from Mowee to the West North West. The South Western coast, which is the only part near which we have approached, is very low; but the land rises backward to considerable height; and, at the distance from which we saw it, appeared to be entirely without wood. Its produce, we were told, consists chiefly of yams. It may, probably, have fresh water, and, on the South and West sides, the coast forms several bays that promise good shelter from the trade winds.
>
> Cook 1785 in Summers 1971:21

The first recorded account of interaction between the natives of Moloka'i and Europeans is from Captain Dixon's account in 1786:

> I should observe, that the people who came to us from Mowee and Morotoy, seemed to admire our vessels more than we had hithertomet with; 'tis probable that many of them had never seen any ships before.
>
> Dixon 1789 in Summers 1971

In 1790, during the wars for the unification of the Hawaiian archipelago, Kamehameha I planned to unite the Moloka'i chiefs against Kahekili, but he ultimately failed to conquer Maui. By 1795, Kamehameha launched his conquest of O'ahu from his headquarters at Kaunakakai. Kamehameha's military encampments were established in Kaunakakai and on the slopes of the surrounding *ahupua'a* because of the presence of an open water passage through the reef (Kamakau 1961:70–71, 159, 172).

In 1792, Captain Vancouver wrote a detailed account of Moloka'i's land shape while sailing west along Moloka'i's southern shoreline (Summers 1971). Captain Vancouver commented on what he called the devastation of the islands of Maui and Moloka'i, and that Lāna'i and Kaho'olawe were exhausted of inhabitants due to Kamehameha's wars of unification (Vancouver 1792 in Graham 2006:79–80). Thirty years after Vancouver's account of Moloka'i, early missionaries estimated the native population at between 3,000 and 4,000 people (Stewart 1830:26 in Stazar 2000:5). Reverend Harvey Rexford Hitchcock established the first Mission Station at Kalua'aha in 1832 and preached once a week at Kamalo'o and Halawa. In 1833, the reverend estimated the population of the entire island to be about 3,300 (Schmitt 1977:2).

### 2.3.1 Historic Land Tenure

During the mid-19th century Māhele, in which the traditional Hawaiian land tenure system was converted to a fee-simple system, not a single *kuleana* was awarded in Kapa'akea Ahupua'a. The ahupua'a remained unassigned after the Māhele until 1890 when all unassigned lands were declared

royal domain by the Crown Land Commissioners through legislation (Indices 1929:23). There were also no known *kuleana* awarded in Kaunakakai. In 1855, the entire *ahupua'a* was conveyed to Lot Kapuāiwa (Kamehameha V) for the sum of $200 under the direction of the King's Privy Council (Privy Council Minutes 1855:AH, in Strazer 2000:5).

In 1859, the traditional land districts of Kona and Ko'olau were combined into the single district of Moloka'i. It was not until 1909 that the Kalaupapa Peninsula became its own county, Kalawao County, and the remainder of the island came under the jurisdiction of Maui County.

In 1890, the Indices of Land Commission Awards lists the Bishop Estates as owners of Kaunakakai (LCA 1890:c.78AH). Also in 1890, 46 people in Kaunakakai petitioned the Minister of the Interior to sell them Kaunakakai and Kapa'akea Ahupua'a (Interior Department, letter of 8/1/1890, in Silva 1983:14).

In the late 1890s, a group of Honolulu investors formed the Moloka'i Ranch by purchasing about 28,000 hectares (ha) (70,000 acres) of Kamehameha V's former land holdings from the Bishop Estate and leasing another 12,000 ha (30,000 acres) from the Hawaiian government. The *ahupua'a* of Kaunakakai was included in the purchase.

Currently, about two-thirds of Moloka'i is privately owned, mainly by large landowners such as Moloka'i Ranch and Puu O Hoku Ranch. Small private landowners hold only six percent of the island's land area. The remaining land is owned by the state (ca. 30%) and federal (ca. 0.2%) governments (Armstrong and Bier 1973). Development on the coast is centered on Kaunakakai Harbor. The State of Hawai'i owns the property at 85 Kaunakakai Place and Island Petroleum, a subsidiary of Mid Pac Petroleum, LLC, owns and operates the fuel storage facility.

### 2.3.2 Land Use and Development

The historic land use of Kapa'akea Ahupua'a is intrinsically tied to the early commercial development of the island's economic center in the neighboring *ahupua'a* of Kaunakakai.

In 1859, Alexander Liholiho (Kamehameha IV) began a sheep ranch on the west end of the island. Kamehameha V, who ruled from 1863 to 1872, further developed the ranch. According to Judd IV (1936:10, in Summers 1971:23), "In the desire to have a country estate, he bought up land and cattle from the resident Hawaiians and used Molokai as a vacation ground from the cares of State." Moloka'i was Kamehameha V's favorite island.

Although when on Moloka'i, Kamehameha IV lived on the beach of Kaunakakai close to the reef passage, it was Kamehameha V who maintained a residential compound for his retreats. This was originally known as Mālama and is currently the site of the Mālama Cultural Park. Mālama is described in an 1870 article in the Hawaiian language newspaper, *Ke Au 'Oko'a*.

> It is close to the edge of the sand and if the tide is very high, the murmuring wavelets wash up and whisper to the grains of earth which were rubbed off the royal feet at the threshold of the entrance leading up to the lanai.
>
> It is a grass hut, skillfully thatched, having a lanai all around, with floors covered with real Hawaiian mats. The house has two big rooms. The parlor is

> well furnished, with glass cases containing books in the English language...This is a very good vacation house for the king, in spite of that sun baked area.
>
> On the northwest side of the house is a large grass house, and it seems to be the largest one seen to this time. The house is divided into rooms and appears to be a place in which to receive the king's guests. There are four other fine, big houses, mostly thatched. These are surrounded by the houses of those who wait on him and some are houses used for storage.
>
> The royal residence is set apart from the rest by a wooden fence that encloses it on all sides except the sea side. The king's yard covers about three acres and is planted with trees, mostly coconuts, that are thriving nicely. Another 16 reasons why we admire it so is that we saw no faucets since we left Honolulu, but when we got there we saw "the water that sleeps in the houses of men."
>
> Holoholopinaau 1870, in Summers 1971:23

Moloka'i's commercial activities started in the late 1800s with cattle ranching and agricultural development. Due to access for ships provided by the passage through the reef, Kaunakakai town became the island's primary port for bringing in supplies and personnel and shipping out goods.

In the late 1890s, a group of Honolulu investors formed the Moloka'i Ranch by purchasing about 28,000 ha (70,000 acres) of Kamehameha V's former land holdings from the Bishop Estate and leasing another 12,000 ha (30,000 acres) from the Hawaiian government. The *ahupua'a* of Kapa'akea was included in the purchase. The investors who established the Moloka'i Ranch formed the American Sugar Company (ASCO) only a year after buying their Moloka'i properties. ASCO attempted to commercialize sugar cultivation on Moloka'i. While sugarcane cultivation was heavily concentrated on the Hoolehua Plain, an early ASCO map indicates that cane fields extended south east into the inland areas of Kapa'akea Ahupua'a just north of the project area. This map also shows that the project area is now situated on a reclaimed salt marsh and reef flat (Pope 1900) (Figure 5). The sugar industry on Moloka'i proved short lived and by the early 1900s the thin fresh water lens irrigating the cane fields was depleated (Sterns and McDonald 1947:5).

> At this point section after section began to fail. Analysis finally showed a high salt content in the well water. For the huge steam pumps had sucked up water with such strength that the layer of sweet water was soon exhausted. Brackish and later salt water was being pumped up the eight miles to Hoolehua, effectively killing all young cane . . .
>
> Judd IV 1936, in Summers 1971:24

The Moloka'i sugar industry collapsed before the construction of the sugar mill. The population of Moloka'i fell from approximately 6,000 in 1834 to 1,006 in 1910 (Sterns and McDonald 1947:5).

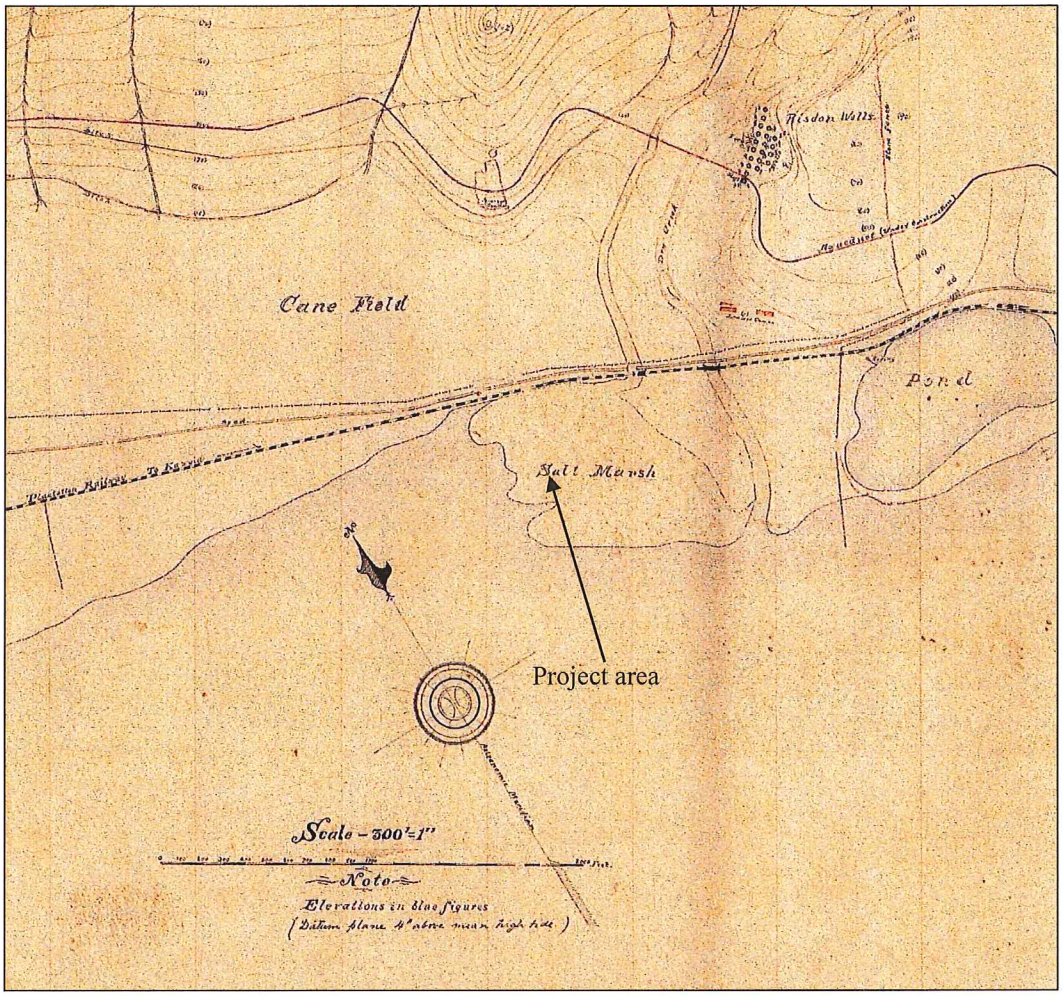


**Figure 5. 1900 American Sugar Company map of Moloka'i Island.**

### 2.3.3 Kapa'akea Homestead

In 1920, the U.S. Government passed the Hawaiian Homes Commission Act which provided a means for Native Hawaiians who were at least half Hawaiian or 50 percent blood quantum to acquire land on which to build homes and farm. The Hawaiian Homes Commission Act specifically designated public lands to the Hawaiian Homes Commission which excluded: 1) all lands within any forest reserve; 2) all cultivated sugar lands; and 3) all public lands held under certificate of occupation, right of purchase lease, or special homestead agreement. Moloka'i served as the staging ground for the program with 2,000 acres available specifically in Kapa'akea Ahupua'a.

The lands provided to the Hawaiian Homes Commission for homesteading proved to be the least desirable lands for development. However, Prince Kuhio indicated he was satisfied with the lands chosen for the Hawaiians at Commission hearings. In a letter written by A. Horner, addressed

to Senator Poindexter, the Kapa'akea lands provided to the Hawaiian Homes Commission for homesteading were described as worthless for agriculture (Spitz 1964:8). In 1924, F.G Krauss, the Chairman of the Classification Commission, also described the homesteading lands of Kapa'akea, Kamiloloa 1 and 2, and Makakupaia 1 as:

> Second class pasture land. "...one of the poorest areas of land that we have inspected. It is very dry, rough, and rocky." Couldn't carry over 100 cattle, perhaps only part of the year. Estimated cost of making domestic water available, $10,000.
>
> Spitz 1964:13

An undated map of the Kapa'akea Residence Lots (Registered map 3093) (Figure 6) shows the arrangement of the parcels in the subdivision. The current project area runs along the north and west boundary of Lot 1, and along the western boundary of Lots 1–5.

According to USGS aerial photographs of Moloka'i's southern shoreline, the Kapa'akea Residential Homestead lots were constructed sometime between 1950 and 1964. In the 1950 aerial photograph, the homestead location is clearly undeveloped, overgrown with vegetation, and the western area of the homestead site appears to be tidal wetlands (Figure 7). By 1964, a USGS aerial photograph shows that construction of some houses in the Kapa'akea Residential Homestead was completed with a number of structures built around Kapa'akea Loop (Figure 8).

## 2.4 Previous Archaeology

No previous archaeological work has been conducted within the project area and previous work in surrounding areas is also extremely limited. A search of the Hawai'i State Historic Preservation Division library indicated that only three projects have been conducted in Kapa'akea Ahupua'a and most of the previous work conducted within the neighboring Kaunakakai Ahupua'a was focused on Kaunakakai Town center located approximately one kilometer to the west. This is due to a higher frequency of commercial and residential development in Kaunakakai. Table 1 below lists archaeological investigations conducted near the current project area and the locations of these projects are shown on Figure 9.

In 1909, John F. G. Stokes conducted an island wide survey of Moloka'i to document the remains of *heiau* on the island. While this early survey is limited by its focus on relatively large structures, a number of large habitation complexes and fish ponds were also recorded. Summers (1971) summarized the manuscripts and notes from the Stokes Moloka'i survey and lists the following site for Kapa'akea:

**Site 50-60-03-132:** Kapa'akea Pond was a *pu'uone*, or an inland pond connected to the ocean by a ditch or stream. The pond is described having an area of 5.45 acres which extended from the sea shore to the Government Road. The pond was filled in by the time Stokes made his observation.

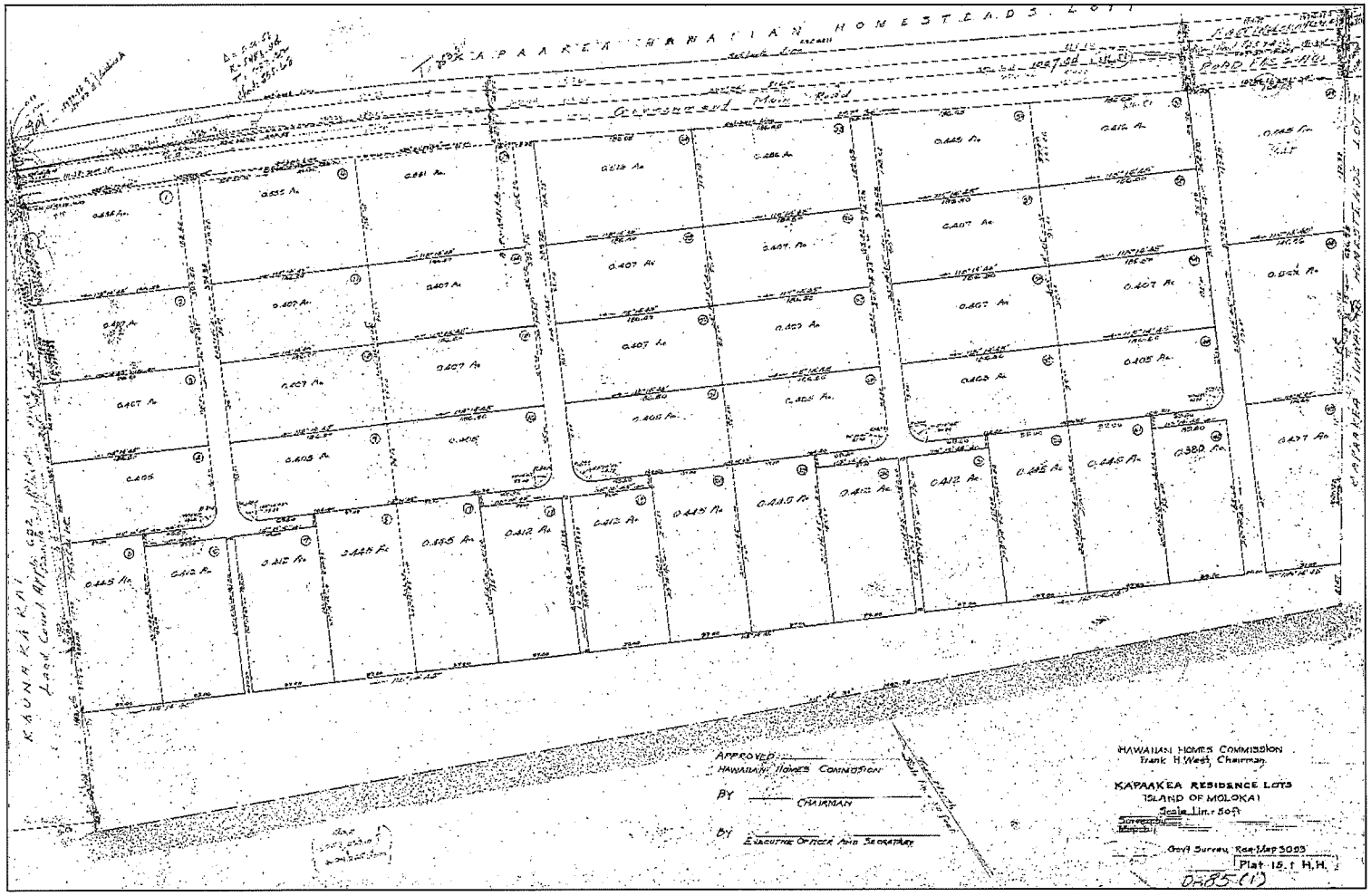


**Figure 6. Registered Map 3093 showing Kapa'akea Residence Lots, date unknown.**

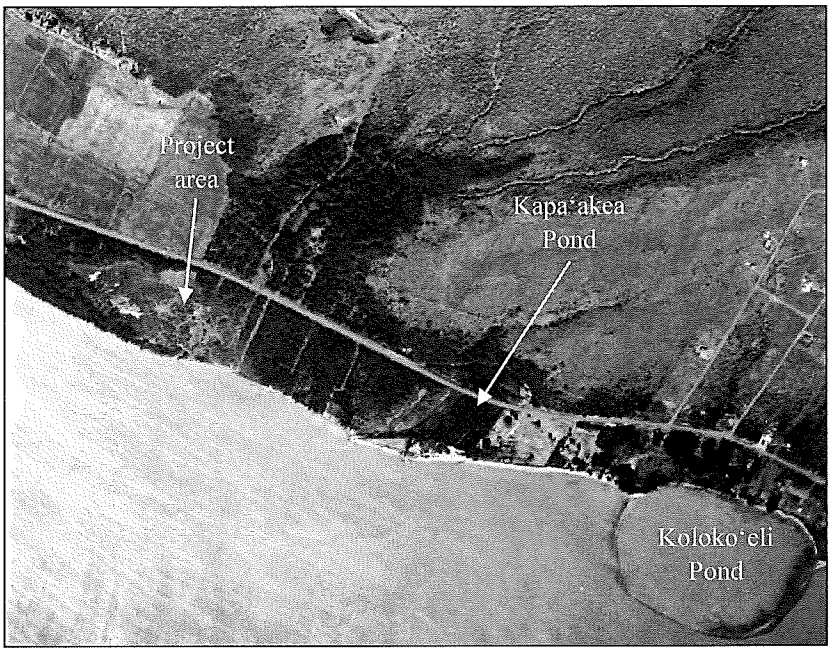


**Figure 7. 1950 USGS aerial photograph of project area.**




**Figure 8. 1964 USGS aerial photograph of project area.**

**Table 1. Previous Archaeological Investigations Conducted in the Vicinity of the Project Area**

| Reference | Location | Investigation | Results |
|---|---|---|---|
| Summers 1971 | Moloka'i | Survey | Kapa'akea Pond (Site 132). |
| Davis 1977 | Kapa'akea | Archaeological Reconnaissance Survey | Site 50-60-03-1600 consisting of seven features. |
| Dye 1977 | Kapa'akea | Survey and Subsurface Testing | Added two additional features to Site 50-60-03-1600 and identified Feature 7 as a human burial marker. |
| Dye and Jordane 2005 | Kaunakakai | Archaeological Assessment | No findings. |
| McGerty and Spear 2006 | Kaunakakai Fire Station | Archaeological Assessment | No findings. |
| Hammatt 2008 | Kaunakakai Elementary School | Literature Review and Field Check | No sites were documented. |
| Madeus et al. 2010 | Kaunakakai Elementary School | Archaeological Monitoring | No Findings. |
| Perzinski and Dega 2011 | Kapa'akea | Archaeological Monitoring | No findings. |
| McElroy et al. 2013 | Kaunakakai Duke Maliu Field | Archaeological Assessment | No findings. |
| Medrano and Dega 2013 | Kaunakakai Duke Maliu Field | Archaeological Monitoring | No findings. |

James M. Dunn, a former surveyor of the State of Hawai'i made the following observation of Kapa'akea Pond in 1957:

> The pond has been neglected for a long period of time and can hardly be called such any more. It has been almost totally filled by silt washed down from the highlands mauka of the road and is covered with dense growth of mangrove with some kiawe. The undergrowth is a thick mat of *akulikuli*. The old springs which fed this pond are either clogged or dried up and no longer available.
>
> Summers 1971:88

Presently, remnants of the Kapa'akea Pond are visible on aerial imagery (Figure 7 and Figure 8) and the pond's shape, including the two ocean drainages, can be clearly seen. Kapa'akea Pond is located 650 meters southeast of the current study area within an undeveloped and overgrown tract of land along the coast situated between two residential areas.

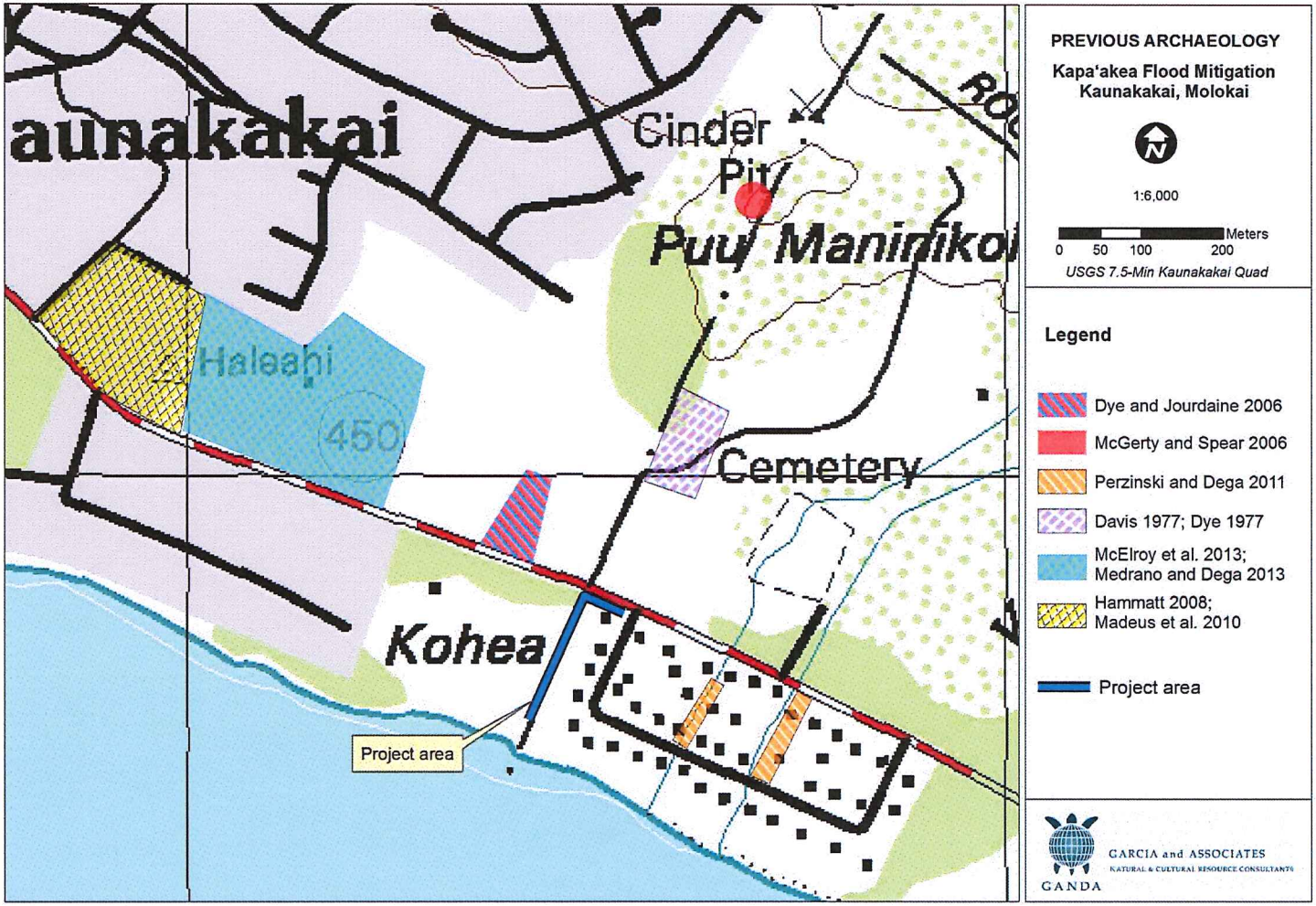


**Figure 9. Previous archaeological work near the project area.**

In 1977, the Archaeological Research Center Hawaii, Inc., conducted a reconnaissance survey for the Kapa'akea Flood Control Project on the lower slopes of Pu'u Maninikolo (Davis 1977). The survey produced a single archaeological complex designated as Site 50-60-03-1600. The site consisted of seven features including a large platform, a small terrace enclosure, rock mounds, large walled enclosures, and a trail. Basalt flakes and surface midden were also observed. The site was interpreted as historic, consisting of rock mounds and a platform, interpreted as a possible historic cemetery. Later that year, the Bishop Museum was commissioned to re-evaluate Site 50-60-03-1600 and conduct subsurface testing. This work produced two additional features which include an enclosure and a cairn. While subsurface excavation produced no dateable material, a historic human burial was identified during excavations of the large platform. The site was interpreted as a historic cemetery with pre-Contact components. The 50-60-03-1600 archaeological complex is located 280 m north northeast of the current project area.

An archaeological assessment was conducted 100 meters northwest of the current project area for the addition of the Verizon Wireless H12 Kaunakakai Cell site (Dye and Jordane 2006). No cutlural properties were identified during the assessment.

In 2006, an archeological assessment was conducted of a 5-acre parcel for the Kaunakakai Fire Station (McGerty and Spear 2006). The project area was once a part of Moloka'i Ranch and is situated along the boundary of Kaunakakai and Kapaakea Ahupua'a approximately 380 m north of the current project area. No cultural properties were identified during the assessment.

In 2008, a historic literature review with a field survey was conducted for the improvement of the wastewater system for Kaunakakai Elementary School. Kaunakakai Elementary School is located 600 m northwest of the current project area and no cultural properties were identified. Subsequent archaeological monitoring of construction for the improvements to the Kaunakakai Elementary School wastewater system was conducted in 2010 (Madeus et al. 2010). Monitoring results also produced no findings.

In 2011, Scientific Consulting Services, Inc., (SCS) conducted archaeological monitoring for the construction of two drainages in Kapa'akea Ahupua'a (Perzinski and Dega 2011). The drainages crossed beneath Kamehameha V highway and through the Kapa'akea Homesteads. This project was located approximately 178 m southwest of the current project area and monitoring results produced no findings.

An archaeological assessment with subsurface testing was conducted at the Duke Maliu Park to determine the nature of stratigraphy on the parcel and to identify any cultural material or deposits (McElroy 2013). A series of nine trenches were excavated to the water table at 100-147 centimeters (cm) below the surface. Stratigraphy was generally characterized as alluvium with natural marine sand below. No cultural deposits or significant finding were observed during the assessment. Archaeological monitoring for improvements to park was also conducted in 2013 and resulted in no findings (Medrano and Dega 2013).

### 2.4.1 Archaeological Expectations

Archival research suggests that pre-Contact environmental conditions were favorable along Moloka'i's southeast coast and semi-permanent occupation started relativity early within the

traditional Hawaiian settlement sequence. The presence of 1) a significant pre-Contact and historic site which included a historic human burial 280 m to the north and 2) Kapa'akea Pond 650 m to the southeast indicate the importance of Moloka'i's southern coast in Hawai'i's cultural history.

Significantly, the current project area was built on a reclaimed salt marsh. Salt marshes represent an environmental type that is very unlikely to contain substantial residues of traditional Hawaiian use aside from fishponds that often feature large rock walls. A previous archaeological investigation at a similarly filled salt marsh just east of the current project area produced no findings (Perzinski and Dega 2011).

Archaeological expectations within the project area are extremely low and it is very unlikely that intact pre-Contact cultural resources are present. According to an ASCO map produced in 1900, the project area is located on a reclaimed salt marsh that extended from the current shoreline to the southern edge of Kamehameha V Highway (Pope 1900). Historic maps also indicate that there were no fishponds built within the immediate vicinity of the project area. By 1930, as shown by a Territory of Hawaii map of Hawaiian Homelands surveyed by Robert D. King, the area of the marsh was filled in. Furthermore, USGS aerial imagery shows that houses for the Kapa'akea Homesteads were not built until after 1950. The early to mid-20th Century date for reclamation of the salt marsh and late-20th Century date for construction of the Kapa'akea Homesteads indicates that the potential for the presence of early historic period resources is also extremely low. It is important to note, however, that fill material used to develop the Kapa'akea subdivision may potentially contain secondary cultural materials and artifacts.

## 3.0 METHODS

Prior to fieldwork, the archaeologist met with the backhoe operator to explain the purpose of the survey, review the types of archaeological resources that may be present, and clearly explain the protocols and procedures for dealing with archaeological resources. The project area was inspected for surface remains and features prior to excavation. During excavation, the archaeologist worked closely with the backhoe operator and directed the progress of work.

Thirteen backhoe test trenches were placed at regular intervals along the project corridor. These were minimally 1.5 m long, 1.0 m deep, and 70 cm wide. Backhoe excavations proceeded in 20 to 30 cm increments so that progress could be closely monitored until the target depth was reached.

Field recording included drawing one stratigraphic profile and photographing exposed sediments in each test unit. The stratigraphic profiles were recorded in order to document the general stratigraphy of the area. Profiles include technical information in accordance with the U.S. Soil Conservation Service standards and an archaeological interpretation of the area's depositional history. Standards of documentation and recording for the project were in accordance with HAR §13-276.

### 3.1 Consultation

Three consultations were conducted with persons knowledgeable about the history of the project area. These consisted of interviews and site tours with Ms. Arleone Dibben-Young, Mr.

Dean Spencer, and Mr. Boom. Ms. Dibben-Young is a biologists who manages the wetland adjacent to the project corridor. Mr. Spencer was born and raised in the Kapa'akea Homesteads and Mr. Boom is a long-time resident of the homesteads. All of the informants were questioned specifically about the history of land use in the area and the presence of any cultural resources.

## 4.0 RESULTS

AIS fieldwork entailed a pedestrian surface survey of the project area, excavation of 13 backhoe trenches, and consultations with three informants regarding site specific information related to cultural and environmental resources. The results of this work are presented below. To facilitate the presentation and discussion of data collected during fieldwork, the "L-shaped" project area was divided into two sections (1 and 2). Section 1 extends from the shoreline in a northeasterly direction for approximately 188 m and Section 2 extends from the northern end of the previous section in an easterly direction for roughly 55 m (Figure 10).

### 4.1 Surface Survey

Prior to subsurface testing the surface of the project area was surveyed by the archaeologist to ascertain if features were present within the boundaries of the project area.

#### 4.1.1 Section 1 Survey

Section 1 is relatively flat and consists of exposed soft muddy soils with little vegetation (Figure 11). Much of this portion of the project area is subject to regular tidal flooding and salt left from evaporated seawater was present on the ground surface. The project area also runs along a modern wire fence that marks the western boundary of five house lots of the subdivision and the boundary between the *ahupua'a* of Kaunakakai and Kapa'akea. Some of the owners of these houses have built modern rock walls and berms on the eastern side of this fence to keep their yards from flooding (Figure 12). No features were found in this portion of the project area and a lot of modern refuse including cans, bottles, and other small bits of rubbish was common on the ground surface.

#### 4.1.2 Section 2 Survey

Section 2 runs along the southern edge of Kamehameha V Highway (Route 450) and is on relatively flat ground covered by cut grass. There is a degraded wall built from roughly quarried red lava rock blocks held together with concrete mortar (Figure 10 and Figure 13). A small valve box is present along the north side of the wall indicating the presence of a buried utility line (Figure 14). Portions of this wall have been knocked down and the stones were moved and restacked forming a wall along the eastern boundary of the house lot along the west side of Kapa'akea Loop Road (Figure 15). According to local informants and residents of the subdivision, this wall is modern and was built within the last 20 years.

### 4.2 Subsurface Testing

Thirteen test units were excavated with a backhoe at regular intervals within the grading and construction footprint for the proposed flood mitigation improvements (Figure 16). All trenches were excavated to a minimum depth of 1 m and exposed imported fill and undisturbed black silty

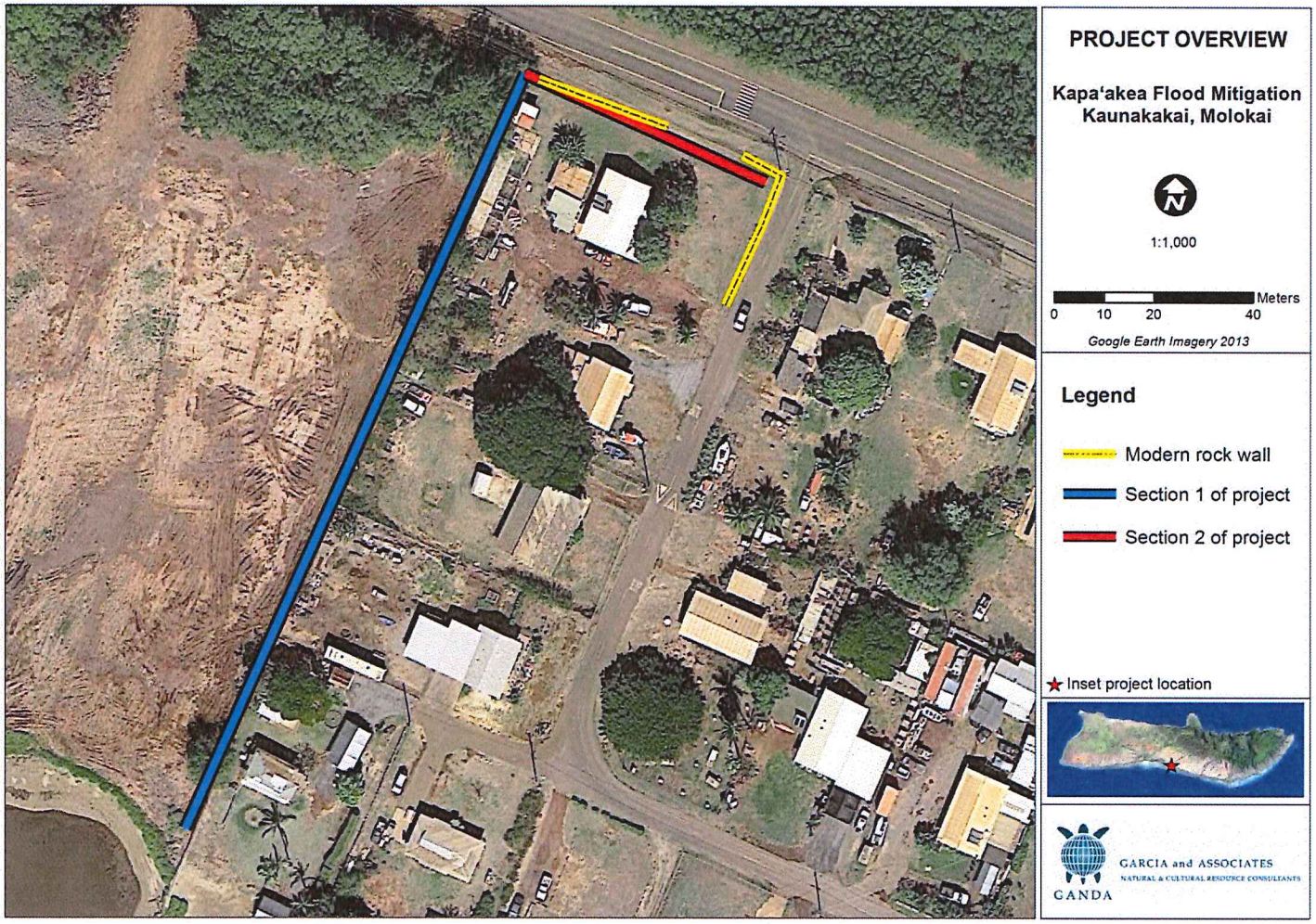


**Figure 10. Sections 1 and 2 of project area, with modern rock wall in Section 2.**



**Figure 11. Coastal mud flat west of project area, facing northwest.**

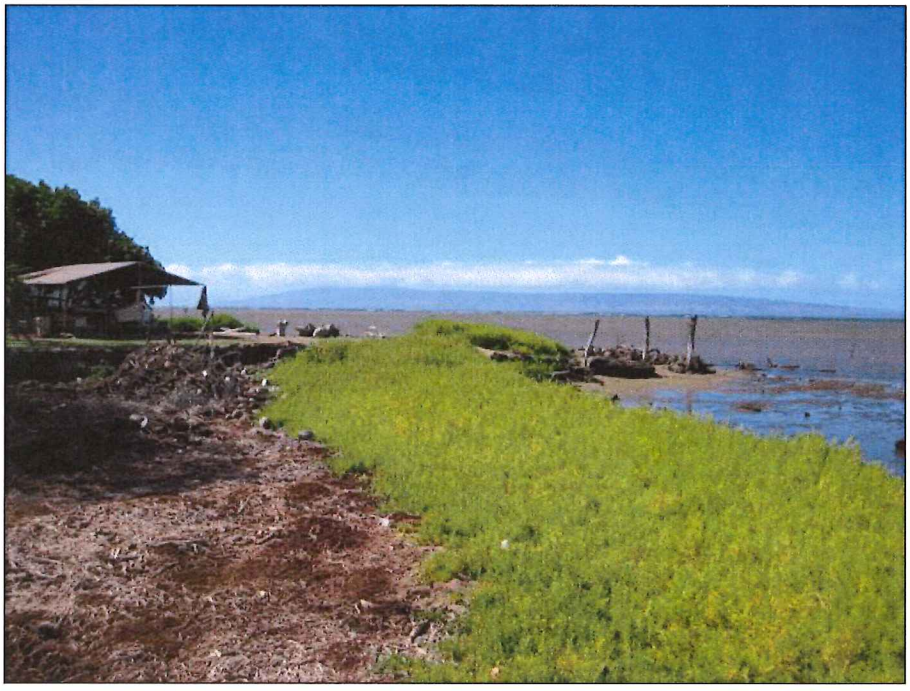

**Figure 12. Coastline at southern end of the project area, facing southeast.**



**Figure 13. Rock and concrete wall, facing north.**



**Figure 14. Degraded section of wall in project area, facing west. Arrow indicates location of valve box.**



**Figure 15. Section of restacked wall along Kapa'akea Loop Road, facing east.**

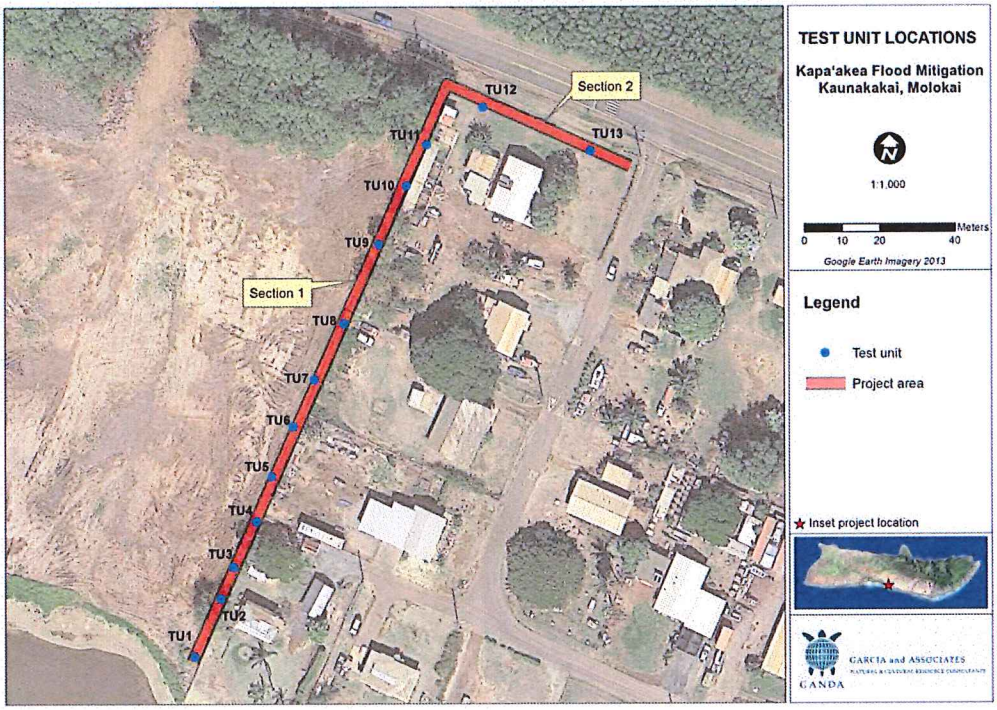


**Figure 16. Locations of test units in the project area.**

loam from the buried salt marsh. The water table was also reached in some of the test units. Within the two sections of the project area, soils from fill layers and salt marsh deposits are the same. Generally, all of the trenches sectioned a layer of fill overlaying undisturbed salt marsh deposits. Profiles were drawn of one wall of each trench and corresponding photographs were taken. Soil descriptions, profiles, and photographs according to the two sections of the project area are presented below. Since redundant stratagraphic soil layers were observed in the two sections of the project area, representative profiles with photographs for each section are presented and described below. The remaining profiles and photographs are included in Appendix A.

### 4.2.1 Section 1 Testing

A total of 11 backhoe trenches were excavated in Section 1 of the project area (Figure 16). This portion of the project area was accessed through the neighboring lot west of the project corridor. This area is flat, mostly void of vegetation, and is a tidal mud flat that is partially flooded at high tide. The ground surface was soft and muddy. The eastern side of the narrow project corridor runs along the edge of five residential parcels. These appear to be slightly raised in elevation and the residents have built low rock walls and piled soil at the western edges of their lots to stop flooding.

Backhoe testing sectioned two basic soil types which were present throughout the 11 test units excavated in Section 1. These are summarized in Table 2 below. Descriptions of the soils from 3 of the 11 test units are also presented below. These provide representative samples of the soils found throughout Section 1 and include TU-1, TU-3, and TU-8.

#### *4.2.1.1 TU-1*

Test Unit 1 was located near the shoreline within the project area. The test unit was 2.1 m long, 70 cm wide, and 1.2 m deep. The unit was excavated next to a modern rock and concrete wall built along the property line of the ocean from lot of the Kapa'akea Subdivision. Two primary soil layers and a sub-layer were sectioned during excavation and included Layers I, Ia, and II (Figure 17). Layer I is 20 cm thick and consists of dark reddish brown very fine sandy clay loam. Modern rubbish, including plastic and glass bottles, metal cans, cut bones, and various other pieces of refuse was present on the surface and in the first 10 cm below the surface. This layer appears to be disturbed fill that has been graded. Layer Ia consists of a brown loamy calcareous beach sand that has been disturbed and mixed with fill. No refuse or cultural materials were present. Layer II extended from 60 cm below the ground surface to the base of the excavation unit below the water table. Layer II consisted of a wet silty clay and is undisturbed soil from the buried salt marsh.

**Table 2. Stratigraphic Description for TU-1–11, Section 1**

| Layer | Depth (cmbs) | Description | Interpretation |
|---|---|---|---|
| I | 0–20/75 | Dark reddish brown (5YR 3/3) very fine sandy clay loam, lower boundary clear and wavy, dry consistence, loose and noncoherent, and nonplastic. Modern refuse present in upper 10 cm of layer. | Disturbed fill |
| Ia | 20–60 | Brown (7.5YR 4/4) loamy sand, lower boundary very abrupt and smooth, moist consistence, loose and noncoherent, and nonplastic. | Disturbed fill mixed with calcareous beach sand |
| II | 25–150 (base of test unit) | Dark brown (7.5Y (3/2) silty clay, wet consistence and sticky. | Buried mud flat |

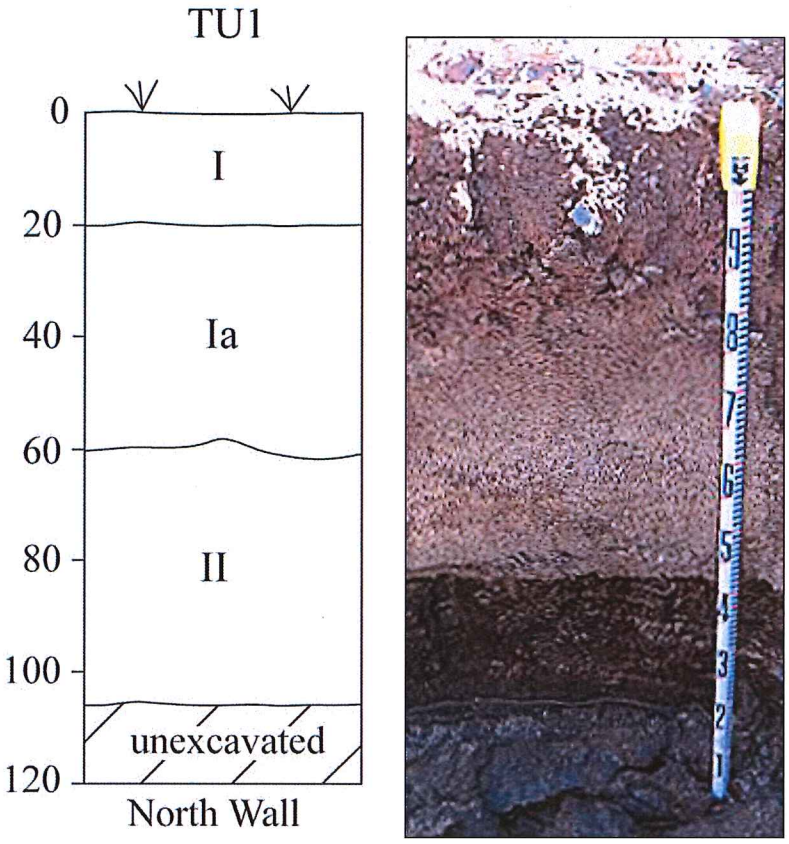


**Figure 17. Profile and photograph of north wall of TU-1.**

#### *4.2.1.2 TU-3*

Test Unit 3 was located 25 m northeast of TU-1. This test unit was 2.70 m long, 70 cm wide, and 1.30 m deep. At the base of the test unit, excavations reached the water table (Figure 18). Two layers were sectioned and no sandy sublayers like Layer Ia in TU-1 and TU-2 were present. Layer I was the same as Layer I in TU-1 and TU-2 an consisted of a very fine sandy clay loam with modern rubbish in the first few centimeters below the ground surface. Layer II was also the same as Layer II in TU-1 and TU-2 and consisted of the wet silty clay from the underlying undisturbed soils of the tidal salt marsh (Figure 18).

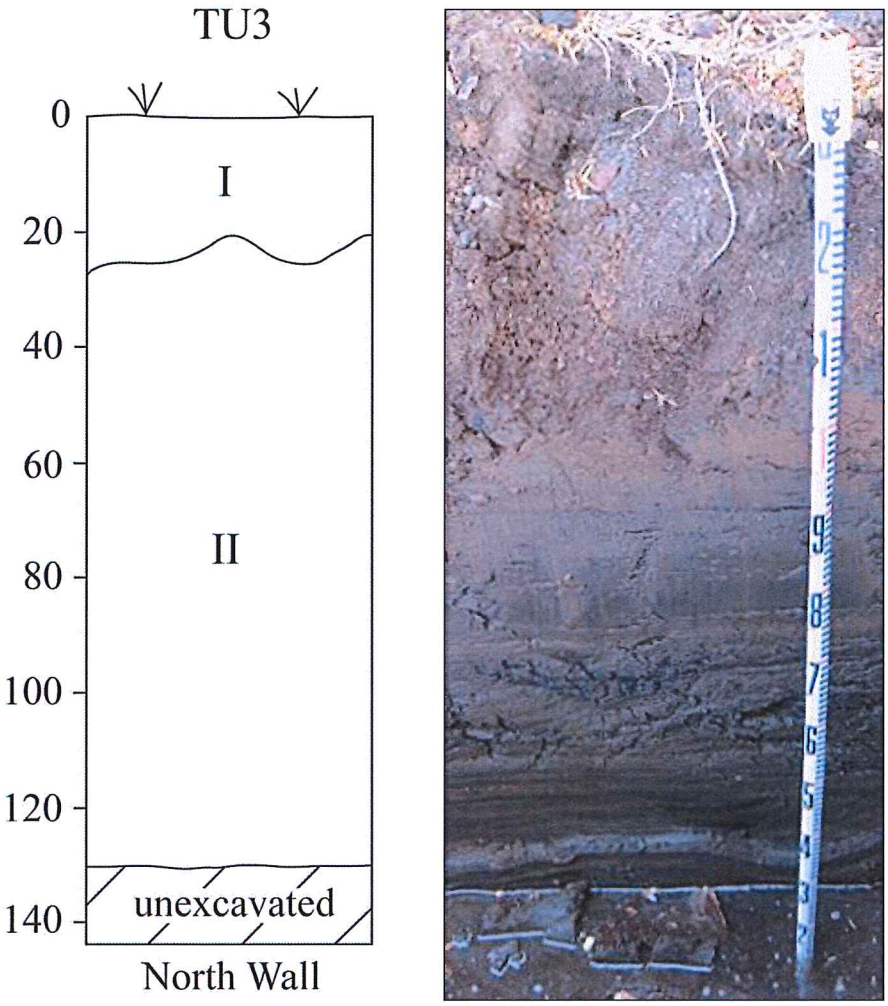


**Figure 18 Profile and photograph of north wall of TU-3.**

#### *4.2.1.3 TU-8*

Test Unit 8 was located approximately 70 m southwest of Kamehameha V Highway. This test unit was 3.10 m long, 70 cm wide, and 1.40 m deep, where excavations hit the water table (Figure 19). Layer I in TU-8 also lacked the sandy sub-Layer Ia that was present in TU-1 or TU-2 (Figure 17 and Appendix A). Layer I was the same as Layer I in TU-1–TU-7 and TU-9–TU-11 and consisted of a very fine sandy clay loam with modern rubbish in the first few centimeters below the ground surface. Layer II was also the same as Layer II in TU-1–TU-7 and TU-9–TU-11 and consisted of the wet silty clay from the underlying undisturbed soils of the tidal salt marsh (Figure 19).

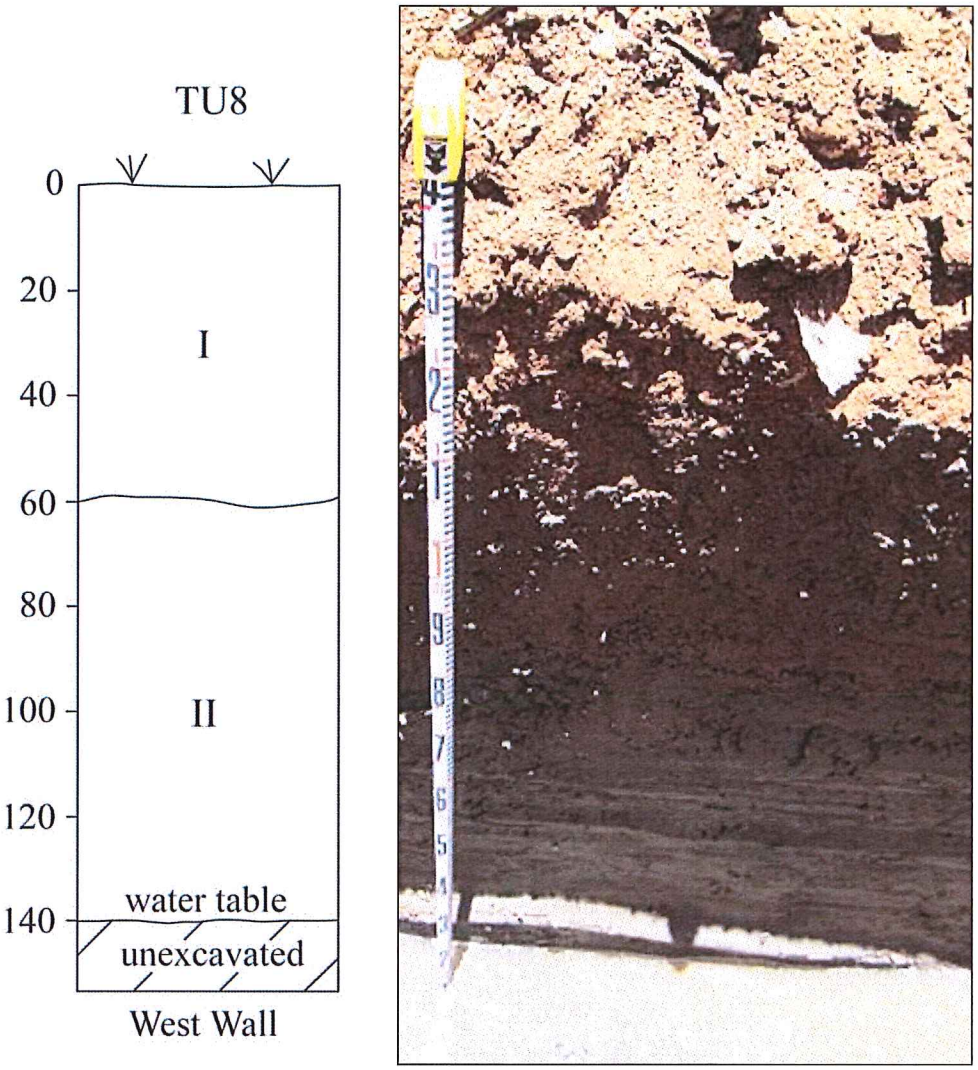


**Figure 19. Profile and photograph of west wall of TU-8.**

#### *4.2.1.4 Section 1 Conclusion*

The 11 test units within Section 1 exhibited the same two stratagraphic soil layers (Layers I and II). The first, Layer I, consists of imported fill used to reclaim the land that the Kapa'akea Subdivision is built on. This layer appears to have been repeatedly disturbed. This is evident by the presence of berms and walls built in the project corridor by residents of the subdivision to prevent flooding and the tracks and tire marks left by heavy equipment throughout the soft surface of the adjoining lot. Residents and Ms. Dibben-Young indicated that the adjoining parcel had been graded several times during clean-up and restoration of the wetland. Layer II consists of soils from the original salt marsh depicted on historical maps that once extended from the shore line to Kamehameha V Highway. The loamy sand sublayer (Ia) present in TU-1 and TU-2 are likely from the mixing of beach sand, fill, and mud flat soils due to wave and tidal action.

Testing results are in agreement with archaeological expectations that there was an extremely low probability for historic properties within Section 1. As noted in the background narrative, Section 1 is located on a reclaimed wetland, there were no fishponds located near the project area, and Kapa'akea subdivision is a recent construction.

### 4.2.2 Section 2 Testing

Section 2 of the "L-shaped" project area extends from the bend, or northwest corner, of the project area at 6 m southwest of Kamehameha V Highway to the eastern end of the project area near the corner of Kamehameha V Highway and Kapa'akea Loop Road (Figure 10). This section runs through the yard of a Kapa'akea subdivision lot southwest of Kamehameha V Highway. The corridor was covered by short grass and contained a modern rock and concrete wall and a berm.

Two backhoe trenches were excavated along this section of the project area, each of which exhibited six stratigraphic layers (Figure 16). Variations in thickness and depth were observed between the layers in the two trenches. Stratigraphy consisted of four layers of fill overlying two layers of calcareous beach sand. A summary of the six soil types and their technical descriptions is provided in Table 3 below.

#### *4.2.2.1 TU-12*

Test Unit 12 was located approximately 12 m east of the northwest corner of the project area. This test unit was 1.60 m long, 70 cm wide, and 1.25 m deep and was excavated on the south side of the degraded rock and concrete wall, roughly 10 m south of Kamehameha V Highway. Excavation of TU-12 sectioned six stratagraphic layers (I–VI) (Figure 20). Layers I and II were imported fill consisting of silt loam and a very fine sandy loam with modern rubbish and rotting wood. Layers III and IV comprised mixed fill and mud flat sediments consisting of a clay loam and silty clay loam. Layer V consisted of disturbed beach sand and Layer VI consisted of wet undisturbed beach sand containing naturally deposited shells.

#### *4.2.2.2 TU-13*

Test Unit 13 was located approximately 20 m southwest of the Kamehameha V Highway and Kapa'akea Loop Road intersection. This test unit was 1.70 m long, 70 cm wide, and 1.00 m deep (Figure 21). Test Unit 13 was also excavated on the south side of a degraded rock and concrete wall

**Table 3. Stratigraphic Description for TU-12–13, Section 2**

| Layer | Depth (cmbs) | Description | Interpretation |
|---|---|---|---|
| I | 0–10/20 | Dark reddish brown (5YR 3/3–3/4) silt loam with 5–10% fine angular crushed coral, lower boundary clear and smooth, dry consistence, loose and noncohernt, and nonplastic. Many very fine grass roots and modern refuse present. | Imported fill |
| II | 10/20–40 | Dark reddish brown (5YR 3/2–3/4) very fine sandy loam, lower boundary clear and smooth, dry consistence, soft and weakly coherent, and nonplastic. Few very fine roots and rotten wood present. | Imported fill |
| III | 40–70 | Dark reddish brown (5YR 3/2–3/3) clay loam, lower boundary clear and smooth, moist consistence, friable and slightly plastic. Very few fine roots. | Mixed fill and mud flat sediments |
| IV | 70–80/100 | Dark reddish brown (5YR 3/2) to dark brown (7.5YR 3/3) silty clay loam, lower boundary clear and smooth, moist consistence, friable and slightly plastic. | Mixed fill and mud flat sediments |
| V | 80/100–120 | Dark brown (7.5YR 3/4) to dark yellowish brown (10YR 4/6) very fine calcareous sand, lower boundary abrupt and smooth, moist consistence, loose and noncoherent. | Disturbed beach sand |
| IV | 120–125 (base of test unit) | Dark olive gray (5Y 3/2) to black (5Y 2.5/2) calcareous sand with natural shell, wet consistence, and nonsticky. | Undisturbed beach sand |

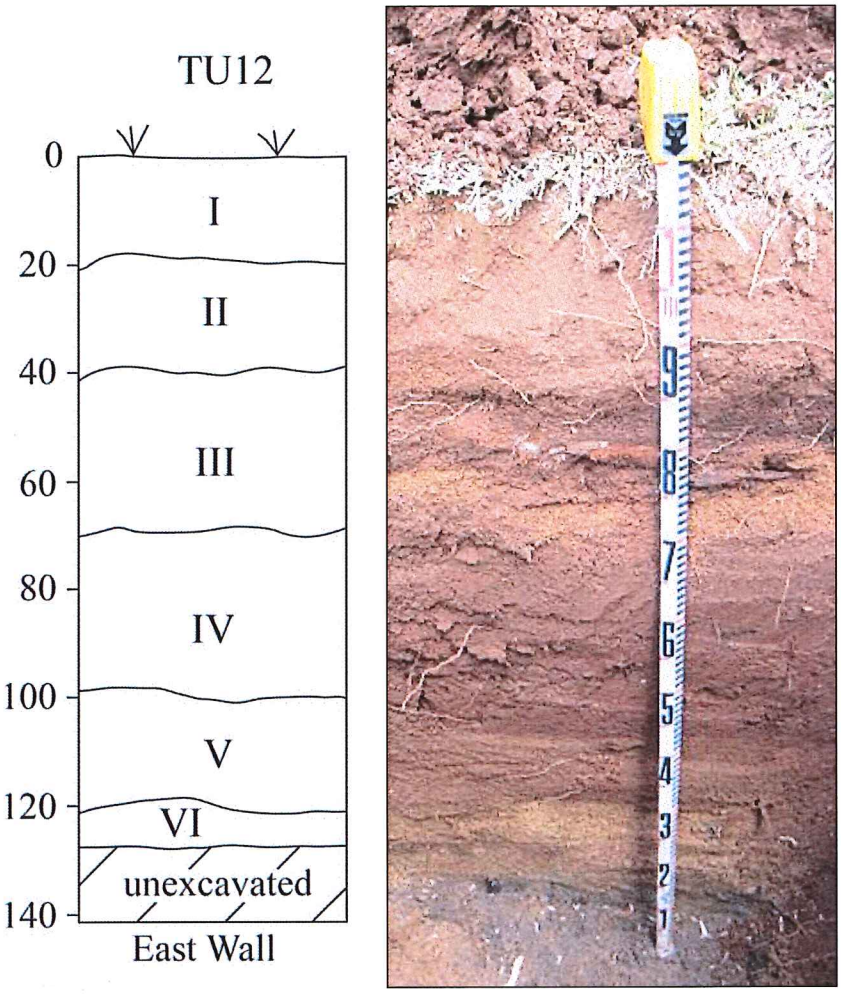


**Figure 20. Profile and photograph of east wall of TU-12.**

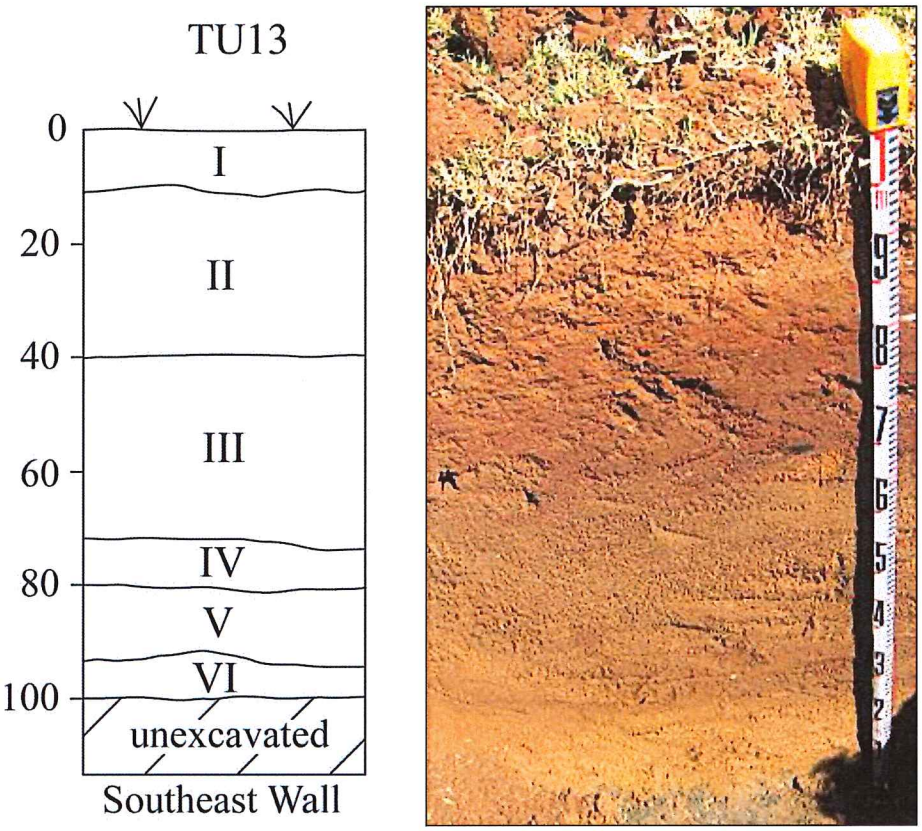


**Figure 21. Profile and photograph of southeast wall of TU-13.**

running along the south edge Kamehameha V Highway. The same stratigraphic layers (I–VI) were sectioned in TU-13 as TU-12. These included Layers I and II that consisted of a silt loam and a very fine sandy loam imported fill with modern rubbish and broken pipe. Like TU-12, Layers III and IV in TU-13 comprised mixed fill and mud flat sediments consisting of a clay loam and silty clay loam. Layer V consisted of a dark yellowish brown disturbed beach sand and Layer VI consists of wet undisturbed beach sand containing naturally deposited shells.

#### *4.2.2.3 Section 2 Conclusion*

Test Units 12 and 13 in Section 1 of the project area sectioned the same six stratagraphic soil layers (Layers I–VI). Layers I and II consist of imported fill likely used to reclaim land for the Kapa'akea Subdivision and for road construction. Both appear to have been repeatedly disturbed during construction of the rock and concrete wall, installation of underground utilities, and landscaping of the yard on Lot 1. This is evident by the presence of a valve box along the north side of the wall, buried pieces of broken pipe, and modern rubbish. Residents of the subdivision and Mr. Spencer indicated that the wall had been built within the last 20 years.

Layers III and IV consist of mixed fill and soils from the original salt marsh depicted on historical maps that once extended from the current shoreline to Kamehameha V Highway. Layer V consists of disturbed beach sand and Layer VI consists of undisturbed wet dark olive gray beach sand. The sandy Layers V and VI present in TU-12 and TU-13 are likely derived from the buried beach at the end of the mud flat that was likely located just south of Kamehameha V Highway. Layer V was likely disturbed during road construction and deposition of fill for the construction of the Kapa'akea Homestead subdivision. Test excavation results are in line with archaeological expectation of an extremely low probability for historic properties. This is because Section 2 is located on or very near the original shoreline and has been buried relatively recently during construction of the Kapa'akea subdivision and Kamehameha Highway.

### 4.3 Consultations

During fieldwork, Ms. Arleone Dibben-Young, Mr. Dean K. Spencer, and a current resident of Kapa'akea subdivision, Mr. Boom, were interviewed regarding the history of the project area. Mr. Spencer was born and raised in the Kapa'akea Homestead. Mr. Boom was residing in the seaside house on Lot 5 in the Kapa'akea Homestead subdivision.

Ms. Dibben-Young is a biologist and long-time resident of Molokai. She works with Ahupua'a Natives and manages several wetlands on the island of Molokai. Ms. Dibben-Young currently manages the wetland areas located on the west side of the project area. Ms. Dibben-Young managed cleanup efforts of this lot and knows members of the Kapa'akea community through conducting interviews during environmental conservation efforts. During the interview for the present project, Ms. Dibben-Young said that a development had been approved for the adjacent empty lot 1989. At this time, Goodfellow Bros. Inc. began to dump soils, rock, and old concrete footings from other construction sites on the property in 1989 as fill. This was subsequently halted by the courts and Goodfellow Bros. Inc. was forced to remove the material in 2001. Ms. Dibben-Young also said this parcel was used as an unofficial dump site and that the materials from the illicit dumping were removed and the parcel was then graded. Ms. Dibben-Young and her colleagues have been removing invasive plants and encouraging the growth of wetland plants, such as *'ākulikuli* (*Sesuvium portulacastrum*). While Ms. Dibben-Young has been managing the parcel immediately adjacent to the project area, she was unaware of the presence of traditional Hawaiian or historic cultural resources in or near the current project area.

Mr. Dean Spencer was born and raised in the Kapa'akea Homesteads subdivision and has several members of his extended family still residing within the subdivision. Mr. Spencer said that as a child he fished along the shoreline in front of the project area and that he used to collect salt from the adjacent mudflats. Mr. Spencer also recalled that the areas west of the project area had always been mudflats and did not know of any traditional Hawaiian or historic resources located within or near the current project area. When asked about the rock and concrete wall in Lot 1 running along Kamehameha V Highway, he indicated that he could not recall exactly when this wall was built, but was sure it was not more than 20 years old.

Mr. Boom, as he wished to be called, currently lives in the house located on Lot 5 of the subdivision. This is located along the shoreline at the southern terminus of the project area. Mr. Boom indicated that he originally grew up in Waimanalo on O'ahu but had been residing in the house on Lot 5 in the Kapa'akea subdivision for the last 20 years. Mr. Boom indicated that family

members who still reside in the subdivision also collected salt from the flats and that there was a pond or hole in the wetland where they use to go swimming. He was also unaware of any traditional Hawaiian or historic cultural resources within or in the vicinity of the project area.

## 5.0 CONCLUSIONS

Garcia and Associates conducted an AIS with systematic subsurface testing of TMKs (2) 5-4-007:009, 010, 011, 024, and 025 in advance of the Kapa'akea Flood Mitigation Improvements Project. This AIS was conducted in accordance with the Hawai'i Revised Statutes §6E-8, Review of Effect of Proposed State Projects, and Hawai'i Administrative Rules §13-276, Rules Governing Standards for Archaeological Inventory Surveys and Reports. The primary objective of the AIS was to determine the presence or absence of subsurface traditional Hawaiian or early historic cultural resources, including human skeletal remains, within the footprint of the flood mitigation improvements.

The AIS fieldwork consisted of a surface survey of the project area and excavation of 13 test trenches at intervals throughout the narrow footprint of the proposed flood mitigation project. Only modern walls and wire fencing associated with the Kapa'akea Homestead Lots 1–5 was observed in the project area during the surface survey. Testing produced stratigraphic data on six soil layers, none of which contained any evidence of traditional Hawaiian or early historic cultural deposition. Based on the survey and testing results, installation of the flood mitigation wall will result in "no historic properties affected." No further archaeological work is recommended.

## 6.0 REFERENCES


Armstrong, R.W. and J.A. Bier
1973 *Atlas of Hawaii*. Department of Geography, University of Hawai'i, Manoa, Hawai'i.

Athens, J.S.
1983 *Archaeological and Historical Investigations at a Property Near Kaunakakai Wharf, Island of Moloka'i, Hawai'i*. Prepared for Alu Like, Inc. J. Stephen Athens, Archaeological Consultant, Honolulu.

1985 *Prehistoric Investigations at an Upland Site on the Leeward Slopes of Central Moloka'i*. Prepared for the Department of Hawaiian Homelands. International Archaeological Research Institute, Inc., Honolulu.

Byerly, D and J. Liston
2013 *Archaeological Inventory Survey of Two 0.5 Acre Parcels, Mapulehu Ahupua'a, Kona District, Island of Moloka'i, Hawai'i*. Prepared for Janet Place. Garcia and Associates, Kailua, Hawai'i.

Davis, B.D.
1977 *Cultural Reconnaissance Report Kapa'akea Homestead Flood Control Project, Kapa'akea, Moloka'i Island, Hawai'i*. Archaeological Research Center Hawaii, Inc., Honolulu.

Denham, T., F.J. Eblé, B. Winsborough, and J.V. Ward
1999 Paleoenvironmental and archaeological investigations at Ōhi'apilo Pond, leeward coast of Moloka'i. *Hawaiian Archaeology* 7:35–59.

Dixon B., M. Major, M. Price, A. Carpenter, C. Stine, and B. Longton
1994 Lithic tool production and dryland planting adaptations to regional agricultural intensification: preliminary evidence from leeward Moloka'i, Hawai'i. *Bishop Museum Occasional Papers* 39:1–19.

Dye, T.
1977 *Cultural Resource Survey, Kapa'akea Flood Control Project, Moloka'i, Hawai'i*. Department of Anthropology, Bernice P. Bishop Museum, Honolulu.

Dye, T.S. and E.H.R. Jourdane
2006 *Archaeological Assessment for the Proposed Verizon Wireless H12 Kaunakakai Cell Site VZW No. 2004005296, Moloka'i Education Center, 375 Kamehameha V Highway, Kaunakakai, Kona District, Moloka'i, Hawai'i (TMK 5-3-03:014)*. Prepared for Clayton Group Services. T.S. Dye Colleagues, Inc., Honolulu.

Fornander, A.
1916–1917 *Fornander Collection of Hawaiian Antiquities and Folk-lore: The Hawaiian Account of the Formation of their Islands and Origin of their Race with the Traditions of their Migrations, Etc. as Gathered from Original Sources*. Bishop Museum Press, Honolulu.

Giambelluca, T.W., Q. Chen, A.G. Frazier, J.P. Price, Y.-L. Chen, P.-S. Chu, J.K. Eischeid, and D.M. Delparte
2013 Online Rainfall Atlas of Hawai'i. *Bulletin of the American Meteorological Society* 94, 313-316, doi: 10.1175/BAMS-D-11-00228.1. Accessed August 5, 2015.

Graham, W.L.
2006 *Braided Waters: Environment, Economy, and Community in Moloka'i, Hawai'i*. Unpublished PhD dissertation. University of California, Los Angeles.

Hammatt, H.
2008 *Archaeological Monitoring Plan for Three Schools within the Moloka'i School Complex Hawai'i Inter-Island DOE Cesspool Project.* Cultural Surveys Hawai'i Inc. Wailuku, Hawai'i.

Kamakau, S.M.
1961 *Ruling Chiefs of Hawai'i.* The Kamehameha Schools Press, Honolulu.

Kelly, M.
1976 Dynamics of production intensification in Precontact Hawai'i. In: *What's New? A Closer Look at the Process of Innovation*, S. van der Leeuw and R. Torrence (eds.), pp. 82–106. Unwin Hyman, Boston.

Kikuchi, W.K.
1976 Prehistoric Hawaiian fishponds. *Science* 193:295–299.

Kirch, P.V.
2010 *How Chiefs Became Kings: Divine Kingship and the Rise of Archaic States in Ancient Hawai'i.* University of California Press, Berkeley.

Kirch P.V. (ed.)
2002 *From the 'Cliffs of Keolewa' to the 'Sea of Papaloa': An Archaeological Reconnaissance of Portions of the Kalaupapa National Historical Park, Moloka'i, Hawaiian Islands.* Berkeley Archaeological Research Facility, Oceanic Archaeology Laboratory Special Publication No. 2. University of California, Berkeley.

Madeus, J.K.
2010 A*n Archaeological Monitoring Report for the Kaunakakai Elementary School Grease Interceptor and Four Inch Sewer Line Installation and Replacement Project Kaunakakai Ahupua'a, Kona District, Moloka'i Island (TMK [2] 5-3-02:052).* Prepared for CH2MHill.

McCoy, M.D.
2007 A revised late Holocene culture history for Moloka'i Island, Hawai'i. *Radiocarbon* 49(3):1273–1322.

McElroy, W.K., M. Elison, and R. Kapoi-Keli'i
2013 *Archaeological Assessment for Improvements to Duke Maliu Regional Park, Kaunakakai Ahupua'a, Kona District, Island of Moloka'i TMK: (2) 5-3-003:012.* Prepared for County of Maui, Department of Parks and Recreation Department. Keala Pono Archaeological Consulting, Kaneohe, Hawai'i.

McGerty, L. and R.L.Spear
2006 *An Archaeological Assessment Report for an Approximately 5-Acre Parcel in Kaunakakai Ahupua'a, Moloka'i, Hawai'i.* Scientific Consultant Services, Wailuku, Hawai'i.

Medrano, S. and M.F. Dega
2013 *An Archaeological Monitoring Report for the Duke Maliu Regional Park Project Kaunakakai Ahupua'a, Kona District Moloka'i Island, Hawai'i (TMK 5-3-003:012).* Prepared for the Department of Parks and Recreation. Scientific Consultant Services, Inc., Honolulu.

Perzinski, D. and M. Dega
2011 *An Archaeological Monitoring Report for DHHL Kapa'akea On-Site Drainage Improvements, Kapa'akea Ahupua'a, Kona District, Moloka'i Island, Hawai'i.* Scientific Consultant Services, Inc., Honolulu.

Roberts, L.
2001 Historical Land Use, Coastal Change, and Sedimentation on South Moloka'i Reefs. *Recent Advances in Marine Science and Technology*, 9th Pacific Congress on Marine Science and Technology: PACON 2000. pp. 167-176. Honolulu.

Schmitt, R.C.
1977 *Historical Statistics of Hawaii*. University of Hawai'i Press, Honolulu.

Sherrod, D.R., J.M. Sinton, S.E. Watkins, and K.M. Brunt
2007 *Geologic Map of the State of Hawaii*. Open File Report 2007-1089.U.S. Geological Survey, Washington, D.C.

Silva, C.L.
1983 *Historic Document Search: Archaeological and Historical Investigations at a Property Near Kaunakakai Wharf, Island of Moloka'i, Hawai'i*. Prepared for Alu Like, Inc. J. Stephen Athens, Archaeological Consultant, Honolulu.

Spitz, A.
1964 *Land Aspects of the Hawaiian Homes Program*. Report No. 1b, Legislative Reference Bureau.

Stearns H.T. and G.A. Macdonald
1947 *Geology and Ground-Water Resources of the Island of Molokai, Hawaii*. Bulletin 11 Hawaii Division of Hydrography.

Strazar, M.D.
2000 *Moloka'i in History: A Guide to the Resources*. Prepared by the History and Humanities Program of the Hawai'i State Foundation on Culture and the Arts.

Summers, C.C.
1971 *Moloka'i, A Site Survey*. Pacific Anthropological Records No. 14. Department of Anthropology, Bernice P. Bishop Museum, Honolulu.

Tuggle, D.H.
1993 *Kamiloloa Archaeology: Data Recovery and Site Inventory for a Portion of Kamiloloa, Island of Moloka'i, Hawai'i*. Prepared for the Department of Hawaiian Home Lands, State of Hawai'i, Honolulu. International Archaeological Institute, Inc., Honolulu.

United States Department of Agriculture (USDA)
2013 Soil Survey Staff, Natural Resources Conservation Service, United States Department of Agriculture. Web Soil Survey. Available online at http://websoilsurvey.nrcs.usda.gov/. Accessed August, 5, 2015.

Weisler, M.
1989 Chronometric dating and Late Holocene prehistory in the Hawaiian Islands: A critical review of radiocarbon dates from Moloka'i Island. *Radiocarbon* 31(2):121–45.

2011 A quarried landscape in the Hawaiian Islands. *World Archaeology* 43(2):298–317.

# APPENDIX A: ADDITIONAL STRATIGRAPHIC PROFILES

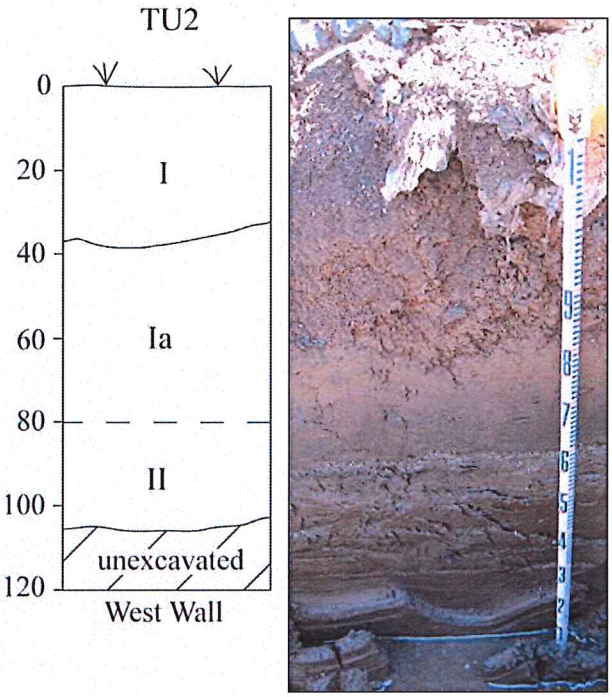
TU2
0
20
40
60
80
100
120
I
Ia
II
unexcavated
West Wall

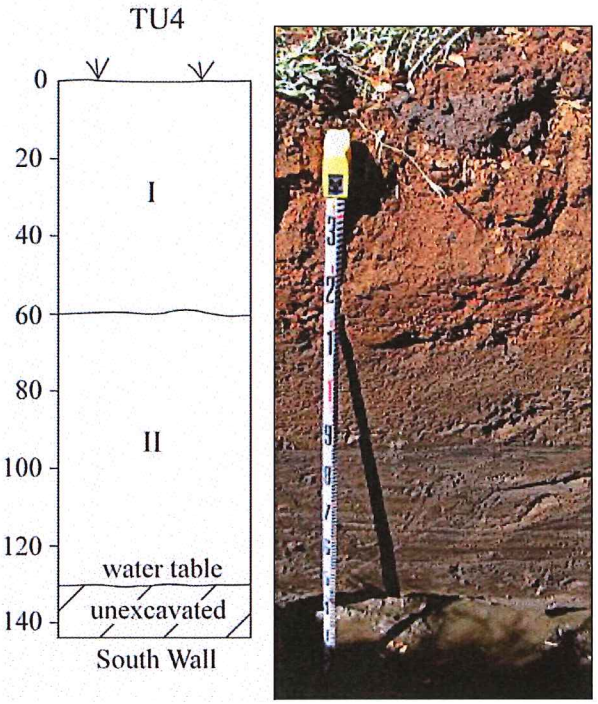
TU4
0
20
40
60
80
100
120
140
I
II
water table
unexcavated
South Wall

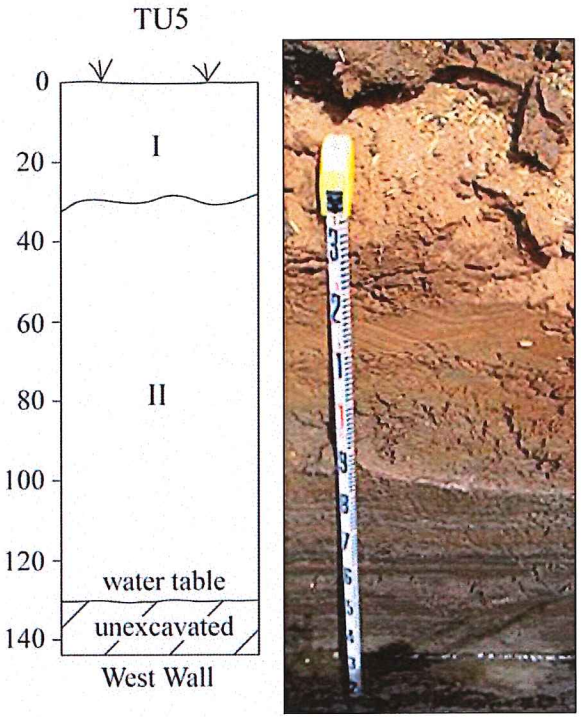
TU5
0
20
40
60
80
100
120
140
I
II
water table
unexcavated
West Wall

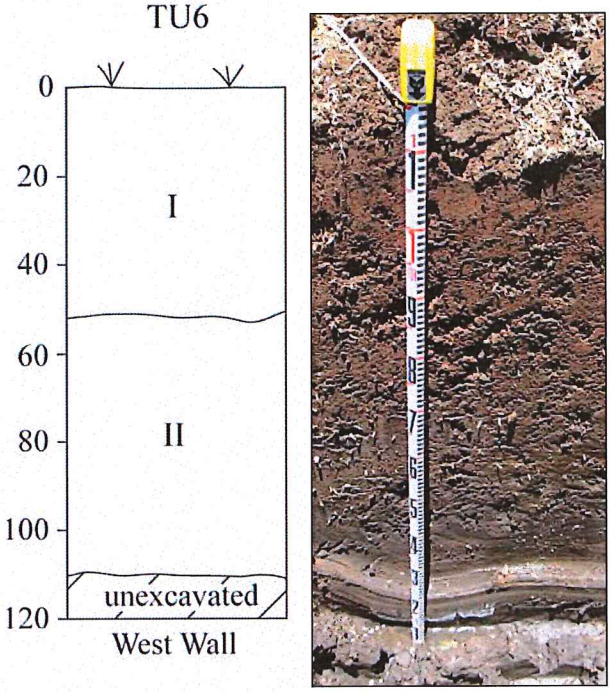
TU6
0
20
40
60
80
100
120
I
II
unexcavated
West Wall

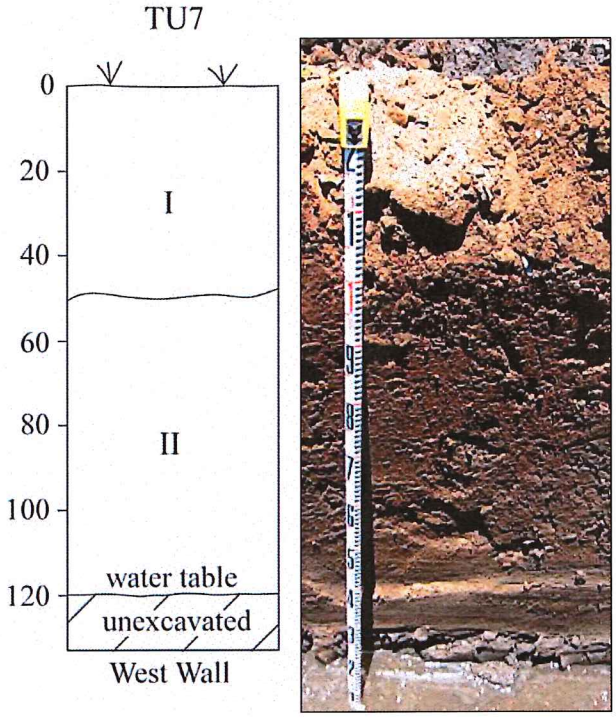
TU7
0
20
40
60
80
100
120
I
II
water table
unexcavated
West Wall

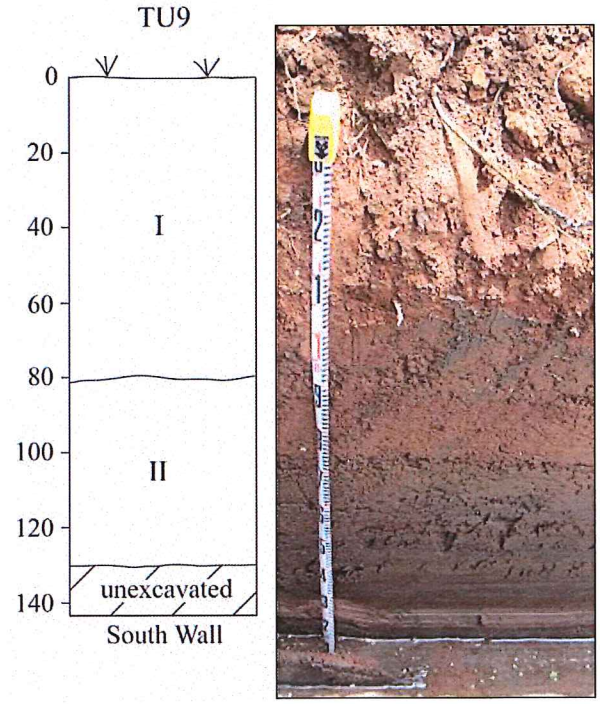
TU9
0
20
40
60
80
100
120
140
I
II
unexcavated
South Wall

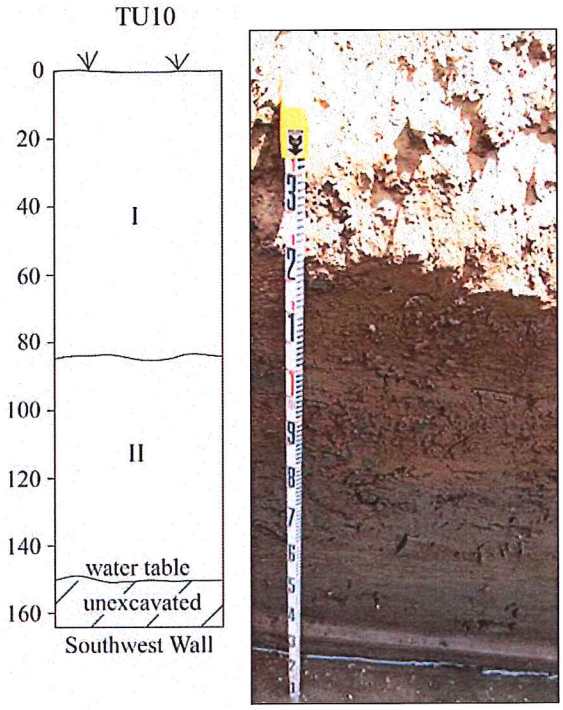
TU10
0
20
40
60
80
100
120
140
160
I
II
water table
unexcavated
Southwest Wall

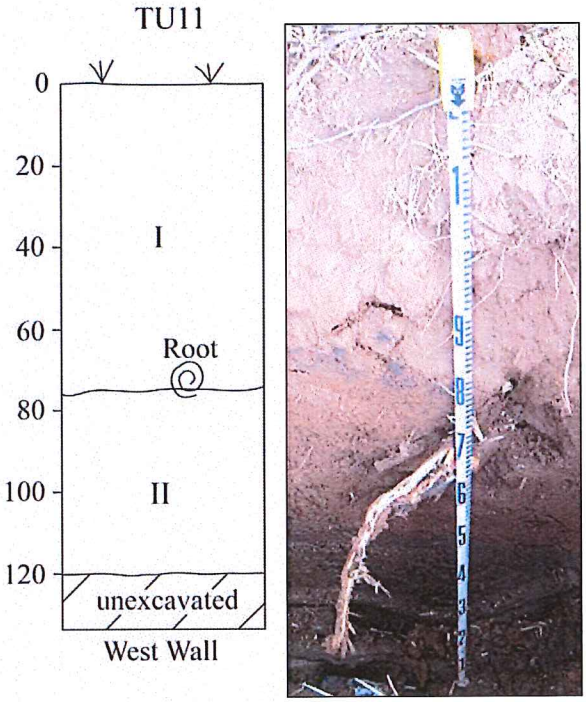
TU11
0
20
40
60
80
100
120
I
Root
II
unexcavated
West Wall

# APPENDIX F-1.

# State Historic Preservation Division Approval Letter for Archaeological Assessment Report

DAVID Y. IGE
GOVERNOR OF HAWAII

SUZANNE D. CASE
CHAIRPERSON
BOARD OF LAND AND NATURAL RESOURCES
COMMISSION ON WATER RESOURCE MANAGEMENT

KEKOA KALUHIWA
FIRST DEPUTY

JEFFREY T. PEARSON
DEPUTY DIRECTOR - WATER

AQUATIC RESOURCES
BOATING AND OCEAN RECREATION
BUREAU OF CONVEYANCES
COMMISSION ON WATER RESOURCE MANAGEMENT
CONSERVATION AND COASTAL LANDS
CONSERVATION AND RESOURCES ENFORCEMENT
ENGINEERING
FORESTRY AND WILDLIFE
HISTORIC PRESERVATION
KAHOOLAWE ISLAND RESERVE COMMISSION
LAND
STATE PARKS

**STATE OF HAWAII**
**DEPARTMENT OF LAND AND NATURAL RESOURCES**

STATE HISTORIC PRESERVATION DIVISION
KAKUHIHEWA BUILDING
601 KAMOKILA BLVD, STE 555
KAPOLEI, HAWAII 96707

October 6, 2015

Log No: 2015.03552
Doc No: 1510MD02
Archaeology

Jobie M. K. Masagatani, Chairman
Hawaiian Homes Commission
Department of Hawaiian Home Lands
PO Box 1879
Honolulu, Hawaii 96805
(Jobie.K.Masagatani@hawaii.gov)

Aloha Ms. Masagatani:

SUBJECT: **Chapter 6E-8 Historic Preservation Review and**
**National Historic Preservation Act (NHPA) Section 106 Consultation –**
**Draft Archaeological Assessment for the Department of Hawaiian Home Lands**
**Kapa'akea Ahupua'a, Kona District, Island of Moloka'i**
**TMK (2) 5-4-007:009, 010, 011, 024 and 025**

Thank you for the opportunity to review the draft report titled *Archaeological Assessment in Support of the Department of Hawaiian Homelands Kapa'akea Flood Mitigation Improvements, Kapa'akea Ahupua'a, Kona District, Island of Moloka'i, Hawai'i TMK (2) 5-4-007:009, 010, 011, 024, and 025* (Byerly and O'Day, September 2015; GANDA Report No. 2341-1), which we received on September 28, 2015. This report was prepared for Mitsunaga & Associates, Inc. on behalf of the Department of Hawaiian Home Lands (DHHL).

Garcia and Associates conducted an archaeological inventory survey (AIS) with systematic subsurface testing in support of DHHL's Kapa'akea flood mitigation improvements project. The flood mitigation project will involve the installation of a concrete and cinder block wall and footing that will extend from the shoreline to the south side of Kamehameha V Highway. The footing for the wall will extend two feet below ground surface and the finished wall will be approximately three feet high. Construction for this project will involve clearing and grading of the footprint and excavation of a trench up to 30 inches deep for the wall's foundation.

The AIS footprint included pedestrian survey of a 240 meter long corridor along the eastern and northern boundaries of the Kapa'akea Homesteads. Thirteen (13) test trenches were mechanically excavated. Testing produced stratigraphic data on six soil layers, none of which contained any evidence of traditional Hawaiian or early historic cultural deposition. No historic properties were identified as a result of the AIS and the report was submitted to SHPD for review and acceptance as an Archaeological Assessment (AIS with negative findings) pursuant to Hawai'i Administrative Rules (HAR) §13-276. No further archaeological work is recommended for this project area.

This archaeological assessment report meets the requirements of HAR §13-276-5 and the Secretary of the Interior's Standards for Archaeological Identification, Assessment, and Documentation. Please send one hardcopy of the final document, clearly marked FINAL, along with a copy of this review letter and a text-searchable PDF version on CD to the Kapolei SHPD office, attention SHPD Library.

Please contact Maui Lead Archaeologist Morgan Davis at (808) 243-4641 or at Morgan.E.Davis@hawaii.gov if you have any questions or concerns about this letter.

Mahalo,

Alan S. Downer, Ph.D.
Administrator, State Historic Preservation Division
Deputy State Historic Preservation Officer

cc: County of Maui
Department of Planning
Planning@co.maui.hi.us

County of Maui
Department of Public Works – DSA
Wendy.Kobashigawa@co.maui.hi.us

County of Maui
Cultural Resources Commission
Annalise.Kehler@co.maui.hi.us

Mitsunaga & Associates
747 Amana Street, Suite 216
Honolulu, Hawaii 96814
general@mitsdesign.com

Patrick O'Day, PhD
Garcia and Associates
146 Hekili St., Suite 101
Kailua, Hawaii 96734
poday@garciaandassociates.com

# APPENDIX G.

# Cultural Impact Assessment Report

# FINAL—Cultural Impact Assessment

# Department of Hawaiian Homelands Kapa'akea Flood Mitigation Improvements, Kapa'akea Ahupua'a, Kona District, Island of Moloka'i, Hawai'i

**TMK (2) 5-4-007:009, 010, 011, 024, and 025**

**Prepared For**:

Munekiyo Hiraga
305 High Street, Suite 104
Wailuku, Hawaii 96793

**Prepared By:**

Michael Desilets, MA
and
David Byerly, BA

Garcia and Associates
146 Hekili St., Suite 101
Kailua, Hawai'i 96734

GANDA Report No. 2350-1

GANDA

1 June 2016

## MANAGEMENT SUMMARY

At the request of Munekiyo Hiraga, Garcia and Associates conducted a Cultural Impact Assessment in support of an Environmental Assessment being prepared for the Department of Hawaiian Homelands' Kapa'akea Flood Mitigation Improvements Project. The project footprint included a 240-meter-long corridor along the eastern and northern boundaries of Kapa'akea Homesteads within Kapa'akea Ahupua'a, approximately one kilometer east of Kaunakakai Town center. The objective of the Cultural Impact Assessment was to determine the presence or absence of cultural practices or traditionally significant cultural places within the flood mitigation improvements footprint and surrounding area, and to evaluate the project's potential impact on such resources. Ethnographic interviews with locally knowledgeable native Hawaiian consultants indicated that marine resource exploitation is the primary cultural practice of concern in the area. It was felt by the consultants, however, that the proposed project would have no impact on this practice. No extant cultural sites or traditionally significant places were identified in or near the project footprint. It is therefore the conclusion of this assessment that the project will have no significant impact on traditional Hawaiian cultural practices or resources.

## CONTENTS


Management Summary ..... i
List of Figures ..... iv
List of Tables ..... iv

1.0 INTRODUCTION ..... 1
1.1 Project Authority ..... 1
1.2 Project Location and Design ..... 1
2.0 ENVIRONMENTAL, HISTORICAL, AND CULTURAL CONTEXT ..... 5
2.1 Environmental Context ..... 5
2.2 Pre-Contact Occupation ..... 5
2.2.3 Mo'olelo of Kapa'akea and Kaunakakai ..... 6
2.3 Post-Contact Period ..... 7
2.3.1 The Great Māhele and Historic Land Tenure in Kapa'akea ..... 8
2.3.2 Land Use and Development ..... 8
2.3.3 Kapa'akea Homestead ..... 9
2.4 The Archaeology of Kapa'akea ..... 11
2.4.1 Archaeological Research within Kapa'akea Flood Mitigation Project Area ..... 16
2.5 Previous Ethnographic Research at Kapa'akea ..... 17
3.0 ASSESSMENT METHODOLOGY ..... 18
4.0 RESULTS ..... 19
4.1 Marine Resources: Gathering and Fishing ..... 19
4.1.1 Impact Assessment ..... 19
4.2 Fresh Water Spring ..... 19
4.2.1 Impact Assessment ..... 20
4.3 Religio-Spiritual Activities ..... 20
4.3.1 Impact Assessment ..... 20
4.4 Salt Gathering ..... 21
4.4.1 Impact Assessment ..... 21
4.5 Places of Traditional Importance ..... 22
4.4.4 Impact Assessment ..... 22
5.0 CONCLUSIONS ..... 23
6.0 REFERENCES ..... 23

## FIGURES

Figure 1. Project area location in Kapa'akea Homesteads, Molokai. ..... 2
Figure 2. *Ahupua'a* boundaries ..... 3
Figure 3. Kapa'kea flood mitigation construction footprint. Kapa'akea Homestead lots to right. ... 4
Figure 4. 1900 American Sugar Company map of Moloka'i Island ..... 10
Figure 5. Registered Map 3093 showing Kapa'akea Residence Lots, date unknown. ..... 12
Figure 6. 1950 USGS aerial photograph of project area. ..... 13
Figure 7. 1964 USGS aerial photograph of project area. ..... 13
Figure 8. Previous archaeological work near the project area. ..... 14
Figure 10. Location of spring on *mauka* side of Kap'akea Fishpond (red oval). ..... 20
Figure 11. Aerial image from 2012 showing salt deposits (red circle) near the project area ..... 21

## TABLES

Table 1. Previous Archaeological Investigations ..... 15

# 1.0 INTRODUCTION

At the request of Munekiyo Hiraga, Garcia and Associates conducted a Cultural Impact Assessment (CIA) in support of an Environmental Assessment being prepared for the Department of Hawaiian Homelands (DHHL) Kapa'akea Flood Mitigation Improvements Project. The objective of the CIA was to determine the presence or absence of native Hawaiian cultural practices or resources within the flood improvements footprint and surrounding area, which might potentially be impacted by the project, and to evaluate the extent and intensity of the impacts.

The Kapa'akea flood mitigation project will involve the installation of a concrete and cinder block wall and footing that will extend from the shoreline to the south side of Kamehameha V Highway. The footing for the wall will extend two feet under the ground surface and the finished wall will be approximately three feet high. Construction for this project will involve clearing and grading of the footprint and excavation of a trench up to 30 inches deep for the wall's foundation.

This report includes descriptions of the historical and cultural context of the Kapa'akea Flood Mitigation Improvements Project site, a review of previous cultural resource studies conducted in the area, the methodology used to gather data on cultural practices, and the results and conclusions of the assessment.

## 1.1 Project Authority

This CIA was conducted in accordance with the Hawaii Revised Statutes (HRS) Chapter 343 which requires the assessment of cultural resources in determining the overall significance of the impact of a proposed action. More specifically, the study complies with Act 50, which amends HRS Section 343-2 to included consideration of the effects of a proposed action on "cultural practices." The methodology, protocols, and content of this CIA follow the *Guidelines for Assessing Cultural Impacts*, adopted by the Environmental Council, State of Hawaii, on November 19, 1997.

## 1.2 Project Location and Design

The Kapa'akea flood mitigation project is located on DHHL's Kapa'akea Homesteads at the west end of Kapa'akea Loop on the southern coast of Moloka'i (Figure 1). The project area is on the northwest boundary of Kapa'akea Ahupua'a (Figure 2) and is approximately one kilometer east of Kaunakakai Town center. It includes TMKs (2) 5-4-007:009, 010, 011, 024, and 025.

The proposed action, construction of a concrete and cinder block wall, includes a 4.5-meter-wide construction footprint beginning at the shoreline at the southwest corner of an oceanfront lot (Figure 3). The wall will run 188 meters in a northeasterly direction to the northwest corner of a lot fronting Kamehameha V Highway. From this point, the proposed wall turns 90 degrees to the east and runs along the southern edge of Kamehamea V Highway for 55 m to the Kapa'akea Loop Road intersection. Total area encompassed by the project is 0.27 acres (0.11 hectares).

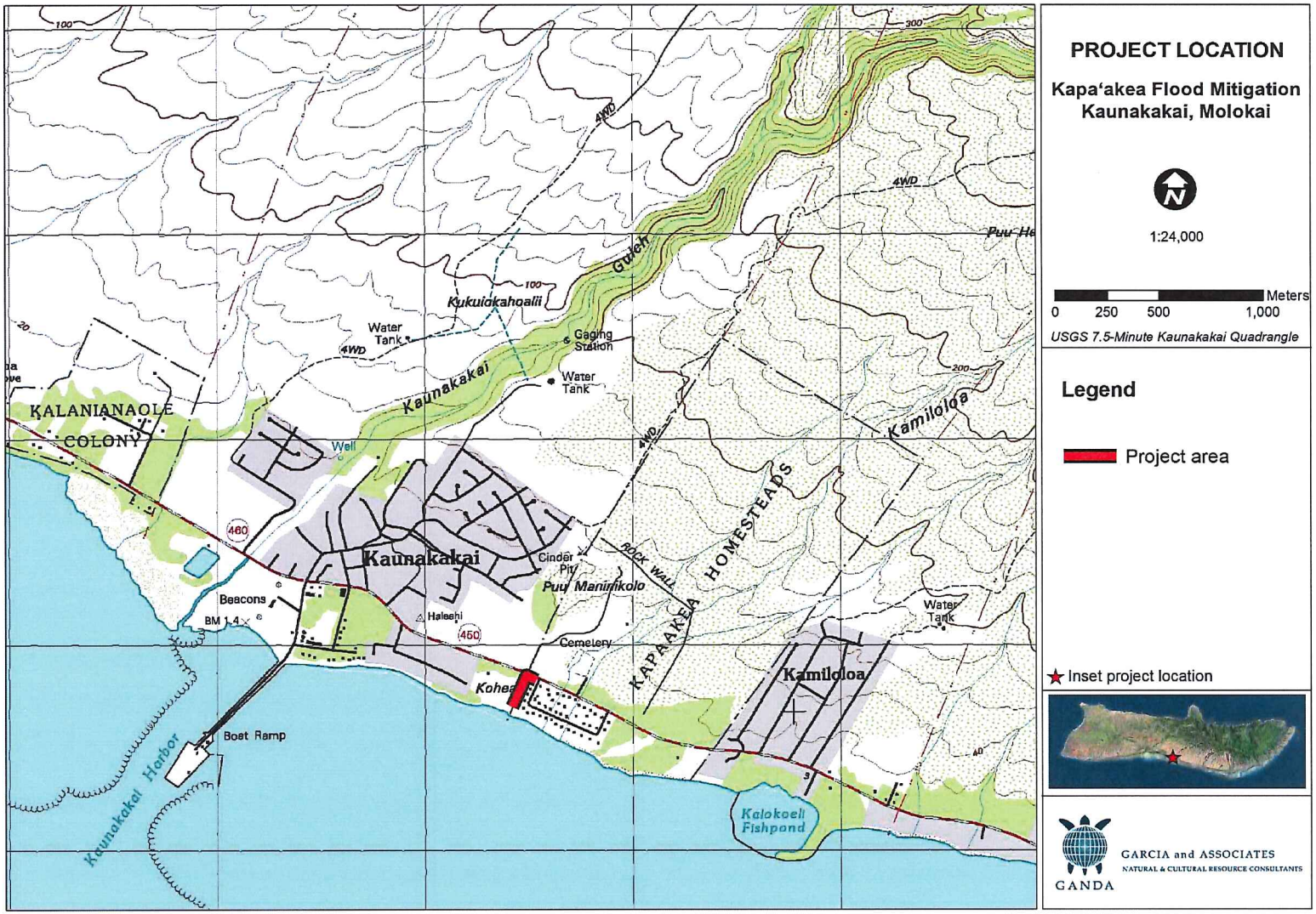


**Figure 1. Project area location in Kapa'akea Homesteads, Molokai.**

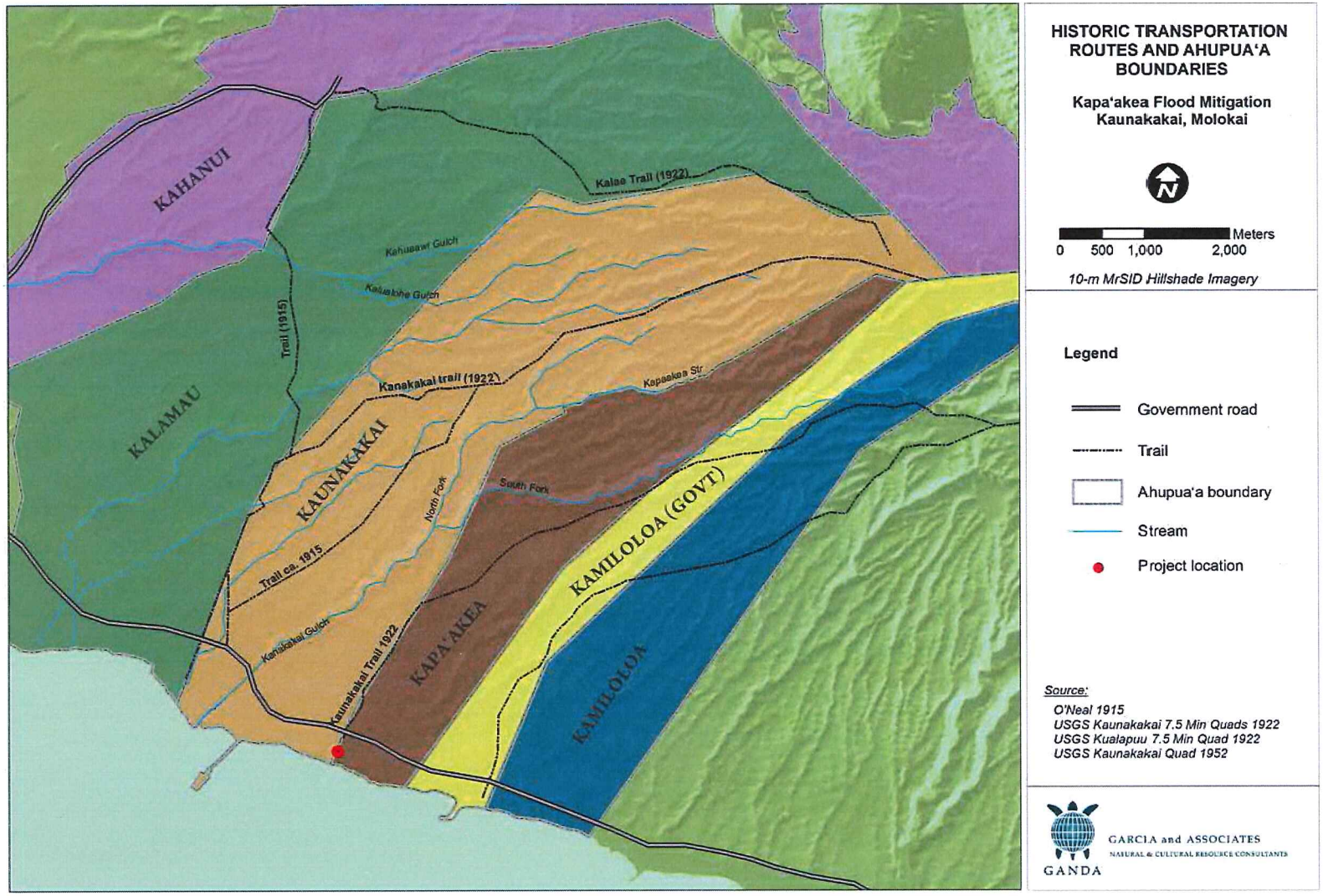


**Figure 2.** ***Ahupua'a*** **boundaries.**

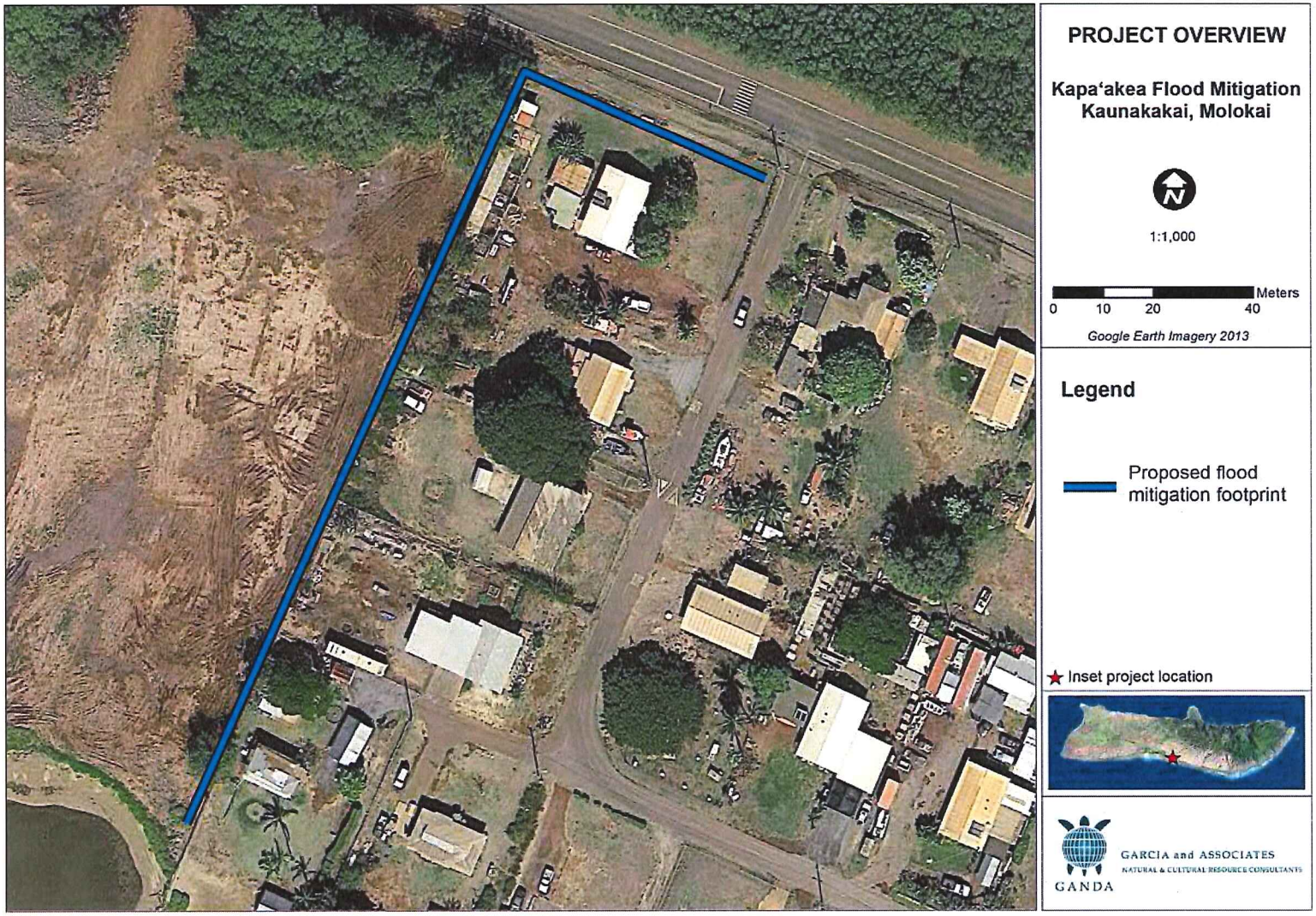


**Figure 3. Kapa'kea flood mitigation construction footprint. Kapa'akea Homestead lots to right.**

## 2.0 Environmental, Historical, and Cultural Context

This section of the report presents environmental, historical, and cultural background information for the project area to provide context for the CIA. This information is used to anticipate what types of cultural practices and features may be present in the project area and to evaluate the significance of any potential impacts to practices and features identified in the consultant interviews.

### 2.1 Environmental Context

Moloka'i was formed by two main shield volcanoes that overlapped in the center of the island approximately 1.8 million years ago (Sherrod et al. 2007). Moloka'i's southeast, or leeward side, is characterized by gently sloping uplands incised by numerous small streams leading out to a low-lying, relatively narrow coastal terrace formed by a high sea level stand about 3000 years ago. The southeast shore is fronted by narrow sand beaches bordered by a shallow reef-flat and well-developed offshore fringing reef. This environment was conducive to the traditional construction of fishponds that line Moloka'i's southern shore. Currently many of these ponds, including Kapa'akea Pond (located 650 m southeast of the project area), are infilled by terrigenous sediment transported from upslope and colonized by mangroves.

Before colonization, the Kona slopes and coast were probably covered with dry mesic forest dominated by *Pritchardia* (*loulu*); the only member of the Arecaceae family native to Hawai'i. Traditional settlers significantly altered their environment. Much of the island's lowland forests were cleared for agricultural pursuits and native vegetation was replaced with Polynesian introductions. In traditional times, the lower slopes of the southern coast were probably vegetated in *lama* (*Diospyros sandwicensis*), *'akoko* (*Chamaesyce* sp.), and *kulu'i* (*Nototrichium* sp.) (Tuggle 1993b:9). When westerners first sighted Moloka'i in 1778, the land rising back from the southwest coast "appeared to be entirely without wood" (Cook 1785, in Summers 1971:21).

Moloka'i's southern coast has been considerably altered since island colonization. Deforestation and extensive terracing and stream diversion for traditional and commercial agriculture on the upland slopes have drastically altered the traditional landscape. Further alteration of Moloka'i's southern landscape was caused by the historic introduction of herbivores, particularly goats.

### 2.2 Pre-Contact Occupation

The following Hawaiian settlement history of Moloka'i is based on paleoenvironmental studies, archaeological research, and oral histories. The chronological framework follows the settlement model of the Hawaiian Islands established by Kirch (2010).

Paleoenvironmental studies on Moloka'i suggest human colonization of the island occurred between AD 800 and 1200 during Hawai'i's Foundation Period (Denham et al. 1999). Paleocoring samples taken along the southern coast indicate a decline of the endemic dry lowland forests with a corresponding rise in sedge and grass pollen and the first occurrence of substantial charcoal flecking (Denham et al. 1999). This large-scale disturbance of the native ecosystem is interpreted to reflect land clearance associated with cultivation (Denham et al. 1999:54)

The first evidence of temporary occupation along Moloka'i's leeward coast is a radiometric date range of calAD 1219–1322 (73.0%), 1347–1393 (22.4%) (Beta-7564) from a charcoal sample collected in a sandy midden in the Mālama Cultural Park located 1.2 km northwest of the current study area (Athens 1983; Weisler 1989:126). As shown by a radiocarbon assay of calAD 1265–1313, (68.9%), 1358–1388 (26.55) (B-359995) associated with a fire pit in Mapulehu (Byerly and Liston 2013), the southeast coastal lowlands may have been semi-permanently occupied during the Early Expansion Period (AD 1200–1400).

The subsequent centuries of this period see the appearance of a diverse range of domestic architectural features in Moloka'i's archaeological record. Basalt quarries began to be used for the procurement of lithic material and tool manufacture (Dixon et al. 1994; Weisler 2011). The first evidence of marine resource and avifauna exploitation (Weisler 1989) as well as the spread of small scale cultivation (Kirch 2002) also dates to this early period.

During Moloka'i's Late Expansion Period (AD 1400–1650), there is strong archaeological evidence for the intensification of subsistence practices, increases in population, and the early evidence of ritual practices (McCoy 2007). Moloka'i's chief agricultural product was sweet potato (*Ipomoea batatas*) which was grown throughout the island (Summers 1971).

Around AD 1450 (Denham et al. 1999) on Moloka'i's southern shore, stone fishtraps may have been expanded into fishponds (*loko i'a*) (Summers 1971; Kikuchi 1976; Kelly 1989). Primary species produced in the roughly 70 stone ponds lining a 20 mile stretch of the island's south and southeast coastline included mullet (*Mugil cephalis*), *'ama'ama* and milkfish (*Chanos chanos*), and *awa*. The inland Kapa'akea Pond is 650 m southeast of the current study area. However, this 5.45 acre pond is filled in with silt and is overgrown with vegetation.

The following centuries of the Proto-Historic Period (AD 1650–1795) brought internal wars for domination of the island between the Ko'olau and Kona chiefs. This conflict may have arisen over the significant economic advantage offered by access rights to the southeast coast's rich fishing grounds, especially when the waters of the Ko'olau district were inaccessible due to rough waters for half the year (Athens 1985:6). After many intra-island battles, the Kona District chief, Paepae, beseeched the O'ahu chief, Kuali'i, for assistance. With the combined strength of the Kona warriors and Kuali'i's army, the Ko'olau warriors were defeated and its chiefs were forced to surrender their lands to O'ahu (Fornander 1916–1917:418). Rule over the island of Moloka'i shifted from island to island. Ultimately, control of Moloka'i shifted from O'ahu to Maui under the renowned chief Kahikili, a rival of the Hawai'i Island chiefs (Kamakau 1961:133).

### 2.2.3 Mo'olelo of Kapa'akea and Kaunakakai

Kapa'akea *ahupua'a* does not figure prominently in the traditional literature of Hawai'i. Archival and documentary research conducted for this study ranging from the standard published works of Hawaiian historians and mythologists to newly available Hawaiian language newspapers produced no information on Kapa'akea. This small *ahupua'a* appears to have always been in the shadow of its more prominent neighbor to the west, Kaunakakai. It will perhaps be of some utility, then, to take a broader regional approach and look at the *mo'olelo* of Kaunakakai as a window of sorts into Kapa'akea.

Many of the *mo'olelo* that mention Kaunakakai refer to it as a place that people passed through, in reference to its landing spot. These include, for example, the tale of Hi'iaka, the sister of Pele, who during her voyages departs from Kaunakakai on her way to O'ahu (Beckwith 1970:175) and Kamalalawalu, Halemano's wife, who landed in Kaunakakai while searching for her husband (Fornander 1919:260).

Fornander (1918:164–167) also recounts the *mo'olelo* of Maniniholokuaua and Keliimalolo, both known for their running abilities. Maniniholokuaua, who lived in Kaunakakai, would steal the canoes and other valuables from those landing at the beach to take to his lizard grandmother living in a cave in upland Kalama'ula. When Keliimalolo, of O'ahu, landed at Kaunakakai, his canoe was also stolen by Maniniholokuaua who lifted it onto his back and carried it to the cave. After enlisting aid from his friends on Kaua'i, Kamaakamikioi and Kamaakauluohia, Keliimalolo caught up with Maniniholokuaua just as he was commanding the cave to open. When Keliimalolo ordered the cave to close, it crushed Maniniholokuaua and the canoe. Maniniholokuaua's grandmother was also dead and the people of Moloka'i could now enter the cave to retrieve their stolen belongings.

The abundance of fish in Kaunakakai's waters is related in the *mo'olelo* of 'Ai'ai, the son of the fishing god Ku'ula.

> After making the circuit of Lanai he ['Ai'ai] went over to Moloka'i, landing at Punakou and travelled along the shore until he reached Kaunakakai. At this place he saw spawns of mullet, called *pua'i'i,* right near the shore, which he kicked with his foot, landing them on the sand. This practice of kicking fish with the feet is carried on to this time, but only at that locality. [Thrum 1907, in Summers 1971:73]

## 2.3 Post-Contact Period

On November 26, 1778, sailors from Captain Cook's expedition were the first Europeans known to sight Moloka'i Island. A year later in 1779, the expedition passed very close to Moloka'i and Captain Cook wrote the following comments:

> Morotoi is only two leagues and a half from Mowee to the West North West. The South Western coast, which is the only part near which we have approached, is very low; but the land rises backward to considerable height; and, at the distance from which we saw it, appeared to be entirely without wood. Its produce, we were told, consists chiefly of yams. It may, probably, have fresh water, and, on the South and West sides, the coast forms several bays that promise good shelter from the trade winds.
>
> Cook 1785 in Summers 1971:21

The first recorded account of interaction between the natives of Moloka'i and Europeans is from Captain Dixon's account in 1786:

> I should observe, that the people who came to us from Mowee and Morotoy, seemed to admire our vessels more than we had hithertomet with; 'tis probable that many of them had never seen any ships before.
>
> Dixon 1789 in Summers 1971

In 1790, during the wars for the unification of the Hawaiian archipelago, Kamehameha I planned to unite the Moloka'i chiefs against Kahekili, but he ultimately failed to conquer Maui. By 1795, Kamehameha launched his conquest of O'ahu from his headquarters at Kaunakakai. Kamehameha's military encampments were established in Kaunakakai and on the slopes of the surrounding *ahupua'a* because of the presence of an open water passage through the reef (Kamakau 1961:70–71, 159, 172). At this time also, Kapa'akea was the site of a meeting between the *ali'i* Ka'iana and Kalanimoku. Kalanimoku had established his war party's camp at Kapa'akea:

> After his conversation with the *ali'i wahine* Nāmāhana [mother of Ka'ahumanu], he bade her farewell and left that place [Kamilola, adjacent to Kapa'kea]. While he was passing Kapa'akea where Kalanimoku was encamped with his army, this bald-headed ali'i saw him, his companion of the battlefield. Affection welled up in him and he called to Ka'iana saying: "*E 'iwi'ula ē! E 'iwi'ula ho'i ē!* Come hither and eat!" When Ka'iana heard Kalanimoku calling him, he took advantage of the invitation by his chiefly comrade. [Desha 2000:405]

In this meeting, he informed his friend Ka'iana of the intent of Kamehameha's other *ali'i* to cut him out of their conquest plans. This marked an important turning point in Ka'iana's allegiance, as he then joined forces with Kalanikpule.

### 2.3.1 The Great Māhele and Historic Land Tenure in Kapa'akea

During the mid-19th century Māhele, in which the traditional Hawaiian land tenure system was converted to a fee-simple system, not a single *kuleana* was awarded in Kapa'akea Ahupua'a. The *ahupua'a* remained unassigned after the Māhele until 1890 when all unassigned lands were declared royal domain by the Crown Land Commissioners through legislation (Indices 1929:23). There were also no known *kuleana* awarded in Kaunakakai. In 1855, the entire *ahupua'a* was conveyed to Lot Kapuāiwa (Kamehameha V) for the sum of $200 under the direction of the King's Privy Council (Privy Council Minutes 1855:AH, in Strazer 2000:5).

In 1890, the Indices of Land Commission Awards lists the Bishop Estates as owners of Kaunakakai (LCA 1890:c.78AH). At this time, 46 people in Kaunakakai petitioned the Minister of the Interior to sell them Kaunakakai and Kapa'akea Ahupua'a (Interior Department, letter of 8/1/1890, in Silva 1983:14). In the late 1890s, a group of Honolulu investors formed the Moloka'i Ranch by purchasing about 28,000 hectares (ha) (70,000 acres) of Kamehameha V's former land holdings from the Bishop Estate and leasing another 12,000 ha (30,000 acres) from the Hawaiian government. The *ahupua'a* of Kaunakakai was included in the purchase.

### 2.3.2 Land Use and Development

Historic land use in Kapa'akea Ahupua'a is intrinsically tied to the early commercial development of the island's economic center in the neighboring *ahupua'a* of Kaunakakai.

In 1859, Alexander Liholiho (Kamehameha IV) began a sheep ranch on the west end of the island. Kamehameha V, who ruled from 1863 to 1872, further developed the ranch. According to Judd IV (1936:10, in Summers 1971:23), "In the desire to have a country estate, he bought up land and cattle from the resident Hawaiians and used Molokai as a vacation ground from the cares of State." Moloka'i was Kamehameha V's favorite island.

Moloka'i's commercial activities expanded dramatically in the late 1800s with cattle ranching and agricultural development. Due to access for ships provided by the passage through the reef, Kaunakakai town became the island's primary port for bringing in supplies and personnel and shipping out goods.

In the late 1890s, a group of Honolulu investors formed the Moloka'i Ranch through the purchase of some 28,000 ha (70,000 acres) of Kamehameha V's former land holdings from the Bishop Estate and leasing another 12,000 ha (30,000 acres) from the Hawaiian government. The *ahupua'a* of Kapa'akea was included in the purchase. The investors who established the Moloka'i Ranch formed the American Sugar Company (ASCO) only a year after buying their Moloka'i properties. ASCO attempted to commercialize sugar cultivation on Moloka'i. While sugarcane cultivation was heavily concentrated on the Hoolehua Plain, an early ASCO map indicates that cane fields extended south east into the inland areas of Kapa'akea Ahupua'a just north of the project area. This map also shows that the project area is now situated on a reclaimed salt marsh and reef flat (Pope 1900) (Figure 4). The sugar industry on Moloka'i proved short lived and by the early 1900s the thin fresh water lens irrigating the cane fields was depleted (Sterns and McDonald 1947:5).

> At this point section after section began to fail. Analysis finally showed a high salt content in the well water. For the huge steam pumps had sucked up water with such strength that the layer of sweet water was soon exhausted. Brackish and later salt water was being pumped up the eight miles to Hoolehua, effectively killing all young cane . . .
>
> Judd IV 1936, in Summers 1971:24

The Moloka'i sugar industry collapsed before construction of the sugar mill. The population of Moloka'i fell from approximately 6,000 in 1834 to 1,006 in 1910 (Sterns and McDonald 1947:5).

### 2.3.3 Kapa'akea Homestead

In 1920, the U.S. Government passed the Hawaiian Homes Commission Act which provided a means for Native Hawaiians who were at least half Hawaiian or 50 percent blood quantum to acquire land on which to build homes and farm. The Hawaiian Homes Commission Act specifically designated public lands to the Hawaiian Homes Commission which excluded: 1) all lands within any forest reserve; 2) all cultivated sugar lands; and 3) all public lands held under certificate of occupation, right of purchase lease, or special homestead agreement. Moloka'i served as the staging ground for the program with 2,000 acres available specifically in Kapa'akea Ahupua'a.

The lands provided to the Hawaiian Homes Commission for homesteading proved to be the least desirable lands for development. However, Prince Kuhio indicated he was satisfied with the lands chosen for the Hawaiians at Commission hearings. In a letter written by A. Horner, addressed to Senator Poindexter, the Kapa'akea lands provided to the Hawaiian Homes Commission for homesteading were described as worthless for agriculture (Spitz 1964:8). In 1924, F.G Krauss, the Chairman of the Classification Commission, also described the homesteading lands of Kapa'akea, Kamiloloa 1 and 2, and Makakupaia 1 as:

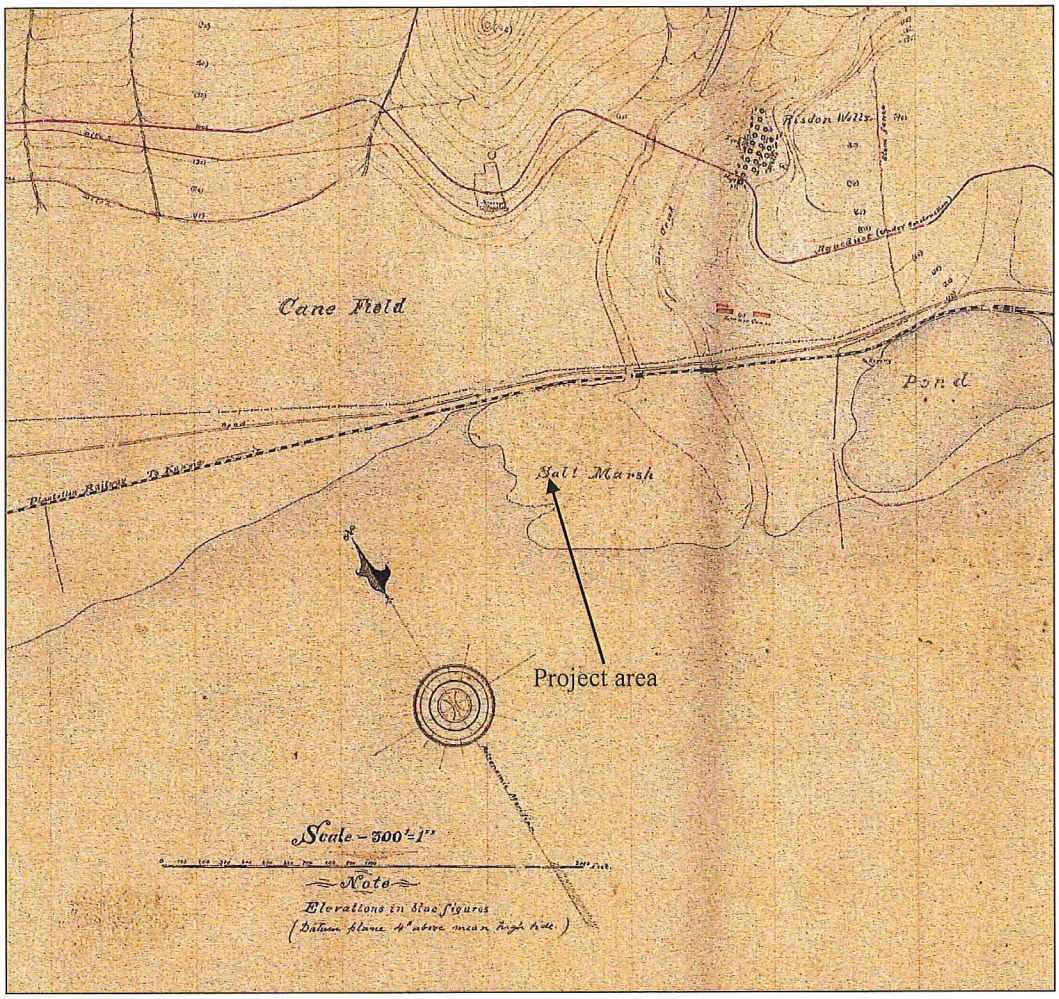


**Figure 4. 1900 American Sugar Company map of Moloka'i Island showing Kapa'akea flood mitigation project area.**

> Second class pasture land. "...one of the poorest areas of land that we have inspected. It is very dry, rough, and rocky." Couldn't carry over 100 cattle, perhaps only part of the year. Estimated cost of making domestic water available, $10,000.
>
> Spitz 1964:13

An undated map of the Kapa'akea Residence Lots (Registered map 3093) (Figure 5) shows the arrangement of the parcels in the subdivision. The current project area runs along the north and west boundary of Lot 1, and along the western boundary of Lots 1–5.

According to USGS aerial photographs of Moloka'i's southern shoreline, the Kapa'akea Residential Homestead lots were constructed sometime between 1950 and 1964. In the 1950 aerial photograph, the homestead location is clearly undeveloped, overgrown with vegetation, and the

western area of the homestead site appears to be tidal wetlands (Figure 6). By 1964, a USGS aerial photograph shows that construction of some houses in the Kapa'akea Residential Homestead was completed with a number of structures built around Kapa'akea Loop (Figure 7).

## 2.4 The Archaeology of Kapa'akea

No previous archaeological work has been conducted within the Kapa'akea flood mitigation project area and previous work in surrounding areas is also extremely limited. A search of the Hawai'i State Historic Preservation Division library indicated that only three projects have been conducted in Kapa'akea Ahupua'a and most of the previous work conducted within the neighboring Kaunakakai Ahupua'a was focused on Kaunakakai Town center located approximately one kilometer to the west. This is due to a higher frequency of commercial and residential development in Kaunakakai. Archaeological investigations conducted near the current project area and the locations of these projects are shown on Figure 8 and listed in Table 1.

In 1909, John F. G. Stokes conducted an island wide survey of Moloka'i to document the remains of *heiau* on the island. While this early survey is limited by its focus on relatively large structures, a number of large habitation complexes and fish ponds were also recorded. Summers (1971) summarized the manuscripts and notes from the Stokes Moloka'i survey and lists the following site for Kapa'akea:

**Site 50-60-03-132:** Kapa'akea Pond was a *pu'uone*, or an inland pond connected to the ocean by a ditch or stream. The pond is described having an area of 5.45 acres which extended from the sea shore to the Government Road. The pond was filled in by the time Stokes made his observation.

James M. Dunn, a former surveyor of the State of Hawai'i made the following observation of Kapa'akea Pond in 1957:

> The pond has been neglected for a long period of time and can hardly be called such any more. It has been almost totally filled by silt washed down from the highlands mauka of the road and is covered with dense growth of mangrove with some kiawe. The undergrowth is a thick mat of *akulikuli*. The old springs which fed this pond are either clogged or dried up and no longer available.
>
> Summers 1971:88

Presently, remnants of the Kapa'akea Pond are faintly visible on aerial imagery (Figure 6 and Figure 7). Kapa'akea Pond is located 650 meters southeast of the current study area within an undeveloped and overgrown tract of land along the coast situated between two residential areas.

In 1977, the Archaeological Research Center Hawaii, Inc., conducted a reconnaissance survey for the Kapa'akea Flood Control Project on the lower slopes of Pu'u Maninikolo (Davis 1977). The survey produced a single archaeological complex designated as Site 50-60-03-1600. The site consisted of seven features including a large platform, a small terrace enclosure, rock mounds, large walled enclosures, and a trail. Basalt flakes and surface midden were also observed.

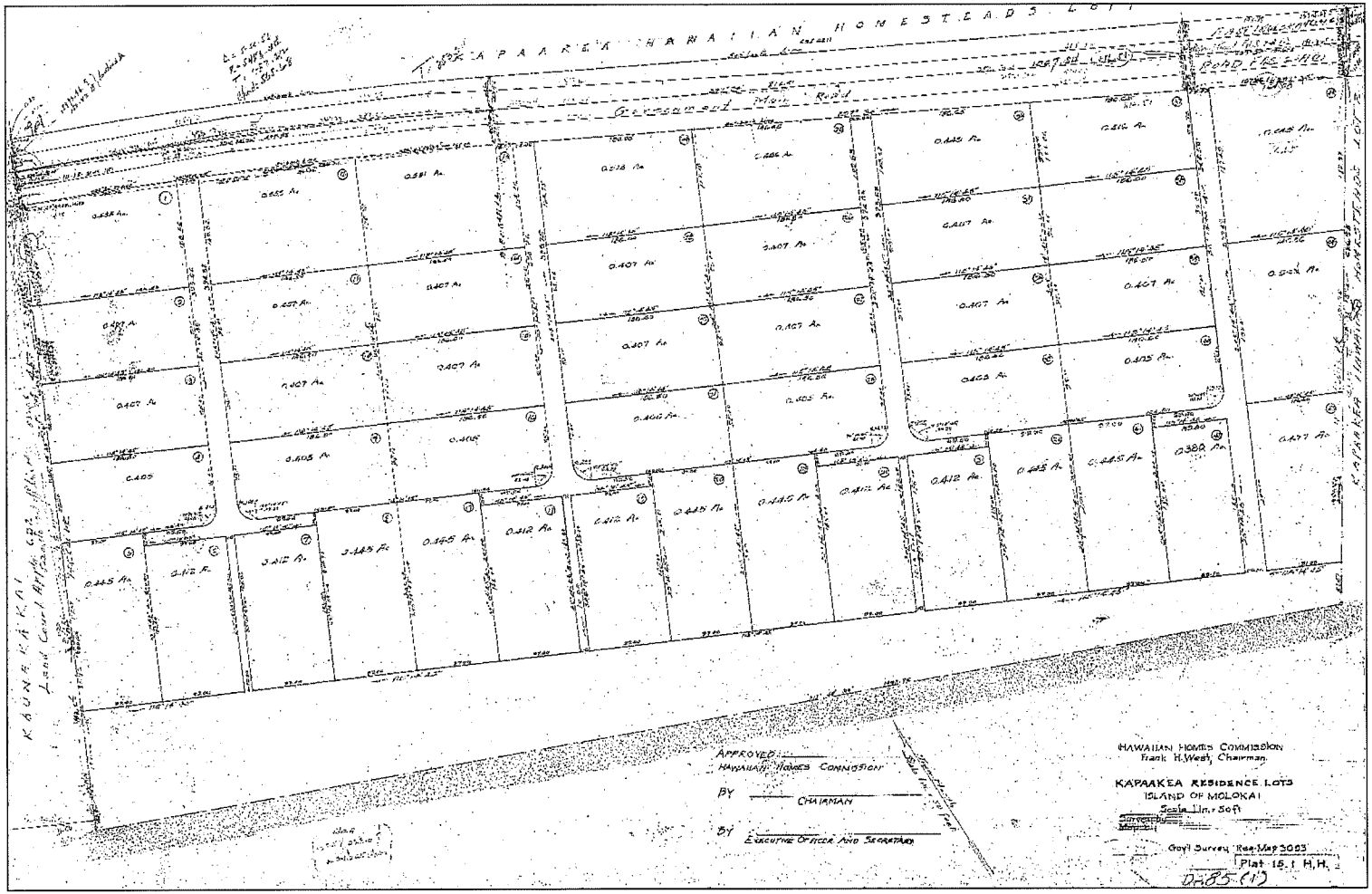


**Figure 5. Registered Map 3093 showing Kapa'akea Residence Lots, date unknown.**

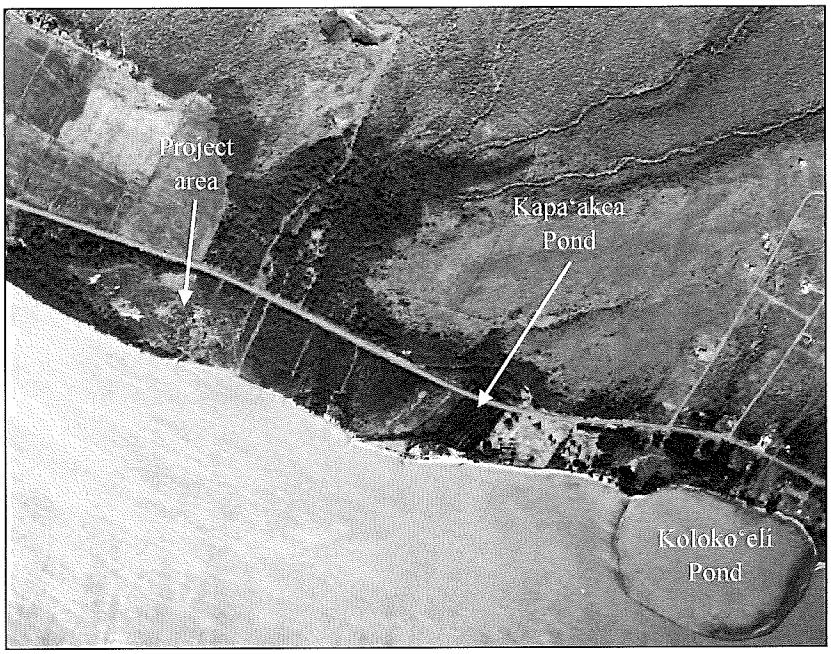


**Figure 6. 1950 USGS aerial photograph of project area.**

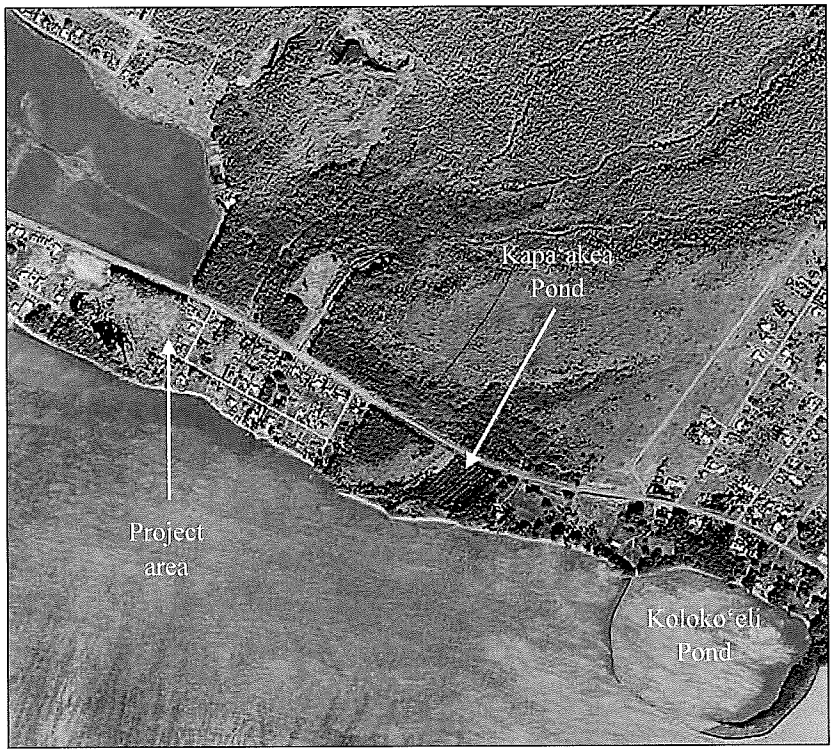


**Figure 7. 1964 USGS aerial photograph of project area.**

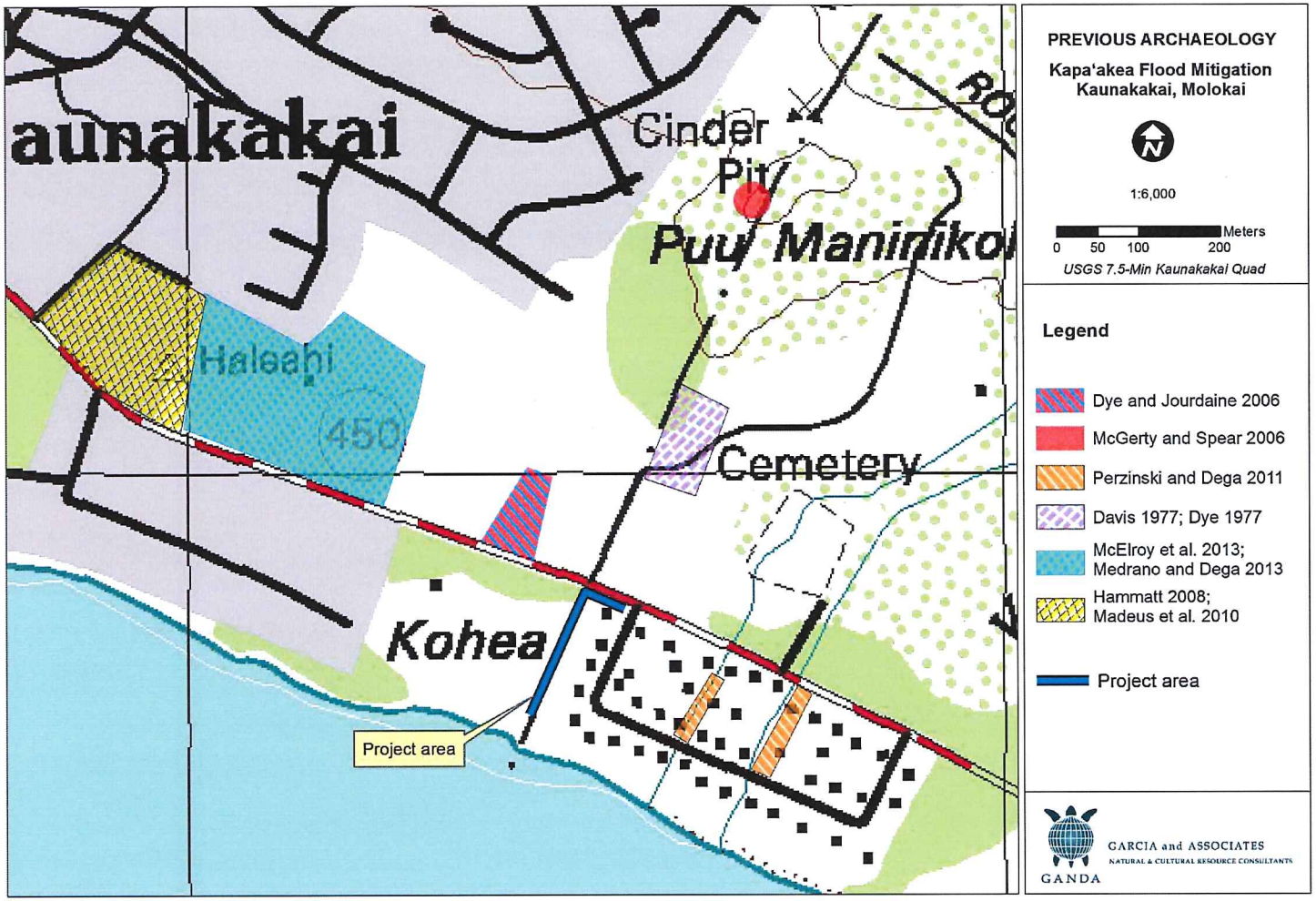


**Figure 8. Previous archaeological work near the project area.**

**Table 1. Previous Archaeological Investigations Conducted in the Vicinity of the Project Area**

| Reference | Location | Investigation | Results |
|---|---|---|---|
| Summers 1971 | Moloka'i | Survey | Kapa'akea Pond (Site 132). |
| Davis 1977 | Kapa'akea | Archaeological Reconnaissance Survey | Site 50-60-03-1600 consisting of seven features. |
| Dye 1977 | Kapa'akea | Survey and Subsurface Testing | Added two additional features to Site 50-60-03-1600 and identified Feature 7 as a human burial marker. |
| Dye and Jordane 2005 | Kaunakakai | Archaeological Assessment | No findings. |
| McGerty and Spear 2006 | Kaunakakai Fire Station | Archaeological Assessment | No findings. |
| Hammatt 2008 | Kaunakakai Elementary School | Literature Review and Field Check | No sites were documented. |
| Madeus et al. 2010 | Kaunakakai Elementary School | Archaeological Monitoring | No Findings. |
| Perzinski and Dega 2011 | Kapa'akea | Archaeological Monitoring | No findings. |
| McElroy et al. 2013 | Kaunakakai Duke Maliu Field | Archaeological Assessment | No findings. |
| Medrano and Dega 2013 | Kaunakakai Duke Maliu Field | Archaeological Monitoring | No findings. |

The site was interpreted as historic, consisting of rock mounds and a platform, interpreted as a possible historic cemetery. Later that year, the Bishop Museum was commissioned to re-evaluate Site 50-60-03-1600 and conduct subsurface testing. This work produced two additional features which include an enclosure and a cairn. While subsurface excavation produced no dateable material, a historic human burial was identified during excavations of the large platform. The site was interpreted as a historic cemetery with pre-Contact components. The 50-60-03-1600 archaeological complex is located 280 m north northeast of the current project area.

An archaeological assessment was conducted 100 meters northwest of the current project area for the addition of the Verizon Wireless H12 Kaunakakai Cell site (Dye and Jordane 2006). No cutlural properties were identified during the assessment.

In 2006, an archeological assessment was conducted of a 5-acre parcel for the Kaunakakai Fire Station (McGerty and Spear 2006). The project area was once a part of Moloka'i Ranch and is situated along the boundary of Kaunakakai and Kapaakea Ahupua'a approximately 380 m north of the current project area. No cultural properties were identified during the assessment.

In 2008, a historic literature review with a field survey was conducted for the improvement of the wastewater system for Kaunakakai Elementary School. Kaunakakai Elementary School is located 600 m northwest of the current project area and no cultural properties were identified. Subsequent archaeological monitoring of construction for the improvements to the Kaunakakai Elementary School wastewater system was conducted in 2010 (Madeus et al. 2010). Monitoring results also produced no findings.

In 2011, Scientific Consulting Services, Inc., (SCS) conducted archaeological monitoring for the construction of two drainages in Kapa'akea Ahupua'a (Perzinski and Dega 2011). The drainages crossed beneath Kamehameha V highway and through the Kapa'akea Homesteads. This project was located approximately 178 m southwest of the current project area and monitoring results produced no findings.

An archaeological assessment with subsurface testing was conducted at the Duke Maliu Park to determine the nature of stratigraphy on the parcel and to identify any cultural material or deposits (McElroy 2013). A series of nine trenches were excavated to the water table at 100-147 centimeters (cm) below the surface. Stratigraphy was generally characterized as alluvium with natural marine sand below. No cultural deposits or significant finding were observed during the assessment. Archaeological monitoring for improvements to park was also conducted in 2013 and resulted in no findings (Medrano and Dega 2013).

### 2.4.1 Archaeological Research within Kapa'akea Flood Mitigation Project Area

Archaeological test excavation was conducted along the entire corridor of the proposed Kapa'akea flood mitigation project on 30 July 2015. This testing included the excavation of 13 test units with a backhoe at regular intervals within the proposed grading and construction footprint. All test units extended to a minimum depth of one meter. In all cases, the test units produced a layer of imported fill overlying an intact black silty loam associated with the buried salt marsh. No traditional Hawaiian or early historic cultural deposits were identified and the testing confirms historic data showing that this portion of the Kapa'akea Homesteads is built on reclaimed marshlands. Salt marshes represent an environmental type that is very unlikely to contain substantial residues of traditional Hawaiian use. A previous archaeological investigation at a similarly filled salt marsh just east of the current project area also produced no findings (Perzinski and Dega 2011).

Based on these findings, it is very unlikely that intact pre-Contact cultural resources are present in the project area. According to an ASCO map produced in 1900, the project area is located on a reclaimed salt marsh that once extended from the current shoreline to the southern edge of Kamehameha V Highway (Pope 1900). Historic maps also indicate that there were no fishponds built within the immediate vicinity of the project area. By 1930, as shown by a Territory of Hawaii map of Hawaiian Homelands surveyed by Robert D. King, the area of the marsh was filled in. Furthermore, USGS aerial imagery shows that houses for the Kapa'akea Homesteads were not built until after 1950. The early to mid-20$^{th}$ Century date for reclamation of the salt marsh and late-20$^{th}$ Century date for construction of the Kapa'akea Homesteads indicates that the potential for the presence of early historic period cultural resources is also extremely low.

## 2.5 Previous Ethnographic Research at Kapa'akea

In conjunction with the archaeological assessment summarized in Section 2.4.1 above, ethnographic consultations were conducted with persons knowledgeable about the history of the project area. These consisted of interviews and site tours with Ms. Arleone Dibben-Young, Mr. Dean Spencer, and Mr. Boom. Ms. Dibben-Young is a biologists who manages the wetland adjacent to the project corridor. Mr. Spencer was born and raised in the Kapa'akea Homesteads and Mr. Boom is a long-time resident of the homesteads. All of the informants were questioned specifically about the history of land use in the area and the presence of any cultural resources. The results of the ethnographic interviews are quoted in full below:

> During fieldwork, Ms. Arleone Dibben-Young, Mr. Dean K. Spencer, and a current resident of Kapa'akea subdivision, Mr. Boom, were interviewed regarding the history of the project area. Mr. Spencer was born and raised in the Kapa'akea Homestead. Mr. Boom was residing in the seaside house on Lot 5 in the Kapa'akea Homestead subdivision.
>
> Ms. Dibben-Young is a biologist and long-time resident of Molokai. She works with Ahupua'a Natives and manages several wetlands on the island of Molokai. Ms. Dibben-Young currently manages the wetland areas located on the west side of the project area. Ms. Dibben-Young managed cleanup efforts of this lot and knows members of the Kapa'akea community through conducting interviews during environmental conservation efforts. During the interview for the present project, Ms. Dibben-Young said that a development had been approved for the adjacent empty lot. At this time, Goodfellow Bros. Inc. began to dump soils, rock, and old concrete footings from other construction sites on the property in 1989 as fill. This was subsequently halted by the courts and Goodfellow Bros. Inc. was forced to remove the material in 2001. Ms. Dibben-Young also said this parcel was used as an unofficial dump site and that the materials from the illicit dumping were removed and the parcel was then graded. Ms. Dibben-Young and her colleagues have been removing invasive plants and encouraging the growth of wetland plants, such as *'ākulikuli* (*Sesuvium portulacastrum*). While Ms. Dibben-Young has been managing the parcel immediately adjacent to the project area, she was unaware of the presence of traditional Hawaiian or historic cultural resources in or near the current project area.
>
> Mr. Dean Spencer was born and raised in the Kapa'akea Homesteads subdivision and has several members of his extended family still residing within the subdivision. Mr. Spencer said that as a child he fished along the shoreline in front of the project area and that he used to collect salt from the adjacent mudflats. Mr. Spencer also recalled that the areas west of the project area had always been mudflats and did not know of any traditional Hawaiian or historic resources located within or near the current project area. When asked about the rock and concrete wall in Lot 1 running along Kamehameha V Highway, he indicated that he could not recall exactly when this wall was built, but was sure it was not more than 20 years old.
>
> Mr. Boom, as he wished to be called, currently lives in the house located on Lot 5 of the subdivision. This is located along the shoreline at the southern terminus of the project area. Mr. Boom indicated that he originally grew up in Waimanalo on O'ahu but had been residing in the house on Lot 5 in the Kapa'akea subdivision for the last 20 years. Mr. Boom indicated that family members who still reside in

> the subdivision also collected salt from the flats and that there was a pond or hole in the wetland where they use to go swimming. He was also unaware of any traditional Hawaiian or historic cultural resources within or in the vicinity of the project area. [O'Day and Byerly 2015:32–33]

## 3.0 Assessment Methodology

The level and intensity of the CIA was scaled to the size and complexity of the project under study. The proposed flood mitigation project is a small-scale action requiring only a minimal physical footprint. For this reason, interviews with a total of four knowledgeable local community members was determined to be an appropriate sample. Every effort was made to consult with the *kupuna* of the Kapa'akea community and those who have the longest history living on the landscape. The cultural consultants were selected primarily through the assistance of the Kapa'akea Homestead Association. Molokai's Ho'olehua Hawaiian Civic Club was also consulted to locate appropriate interview subjects. Their recommendations largely overlapped those of the Kapa'akea Homestead Association. It appears to be the consensus of the local Hawaiian community that Hawaiians living at Kapa'akea are the most knowledgeable regarding cultural practices and cultural sites in the area.

The interview style for this CIA was decidedly informal and a "talk story" format was selected as the most culturally appropriate and efficacious. The interview style followed Spradley's (1979) conception of the ethnographic interview as a qualitative "speech event," in which development of rapport with interviewees is of central importance (see also Leach 2002). Interviews were not recorded and no structured ethnographic instrument was followed. The consultations did, however, incorporate a mix of directive and non-directive interview techniques. The consultations began with a brief explanation of the goals and objectives of the CIA and a review of the flood mitigation project itself. This was followed by general questions regarding practices or resources that might be of interest. Research domains such as cultural/spiritual sites, terrestrial subsistence and medicinal gathering, and marine resource gathering and fishing were asked about explicitly and any potentially significant responses were then pursued with directed questioning.

All interviews were facilitated and attended by Kapa'akea Homestead Association President, resident, and native Hawaiian consultant Doreen Gaspar, who was invaluable in locating appropriate participants and organizing the consultations. Consultant interviews included extended sit-down interviews, home visits, and telephone conversations. Additionally, a driving tour of Kapa'akea Homestead and surrounding areas was conducted with Mrs. Doreen Gaspar and Mrs. Georgette Kaneakua to identify historic places, natural resources, and current cultural practices of concern to the community. A site visit was also made to the locale of the proposed project.

The following Kapa'akea Homestead Association members, all native Hawaiian individuals living in the vicinity of the proposed project, were interviewed:

- Georgette Kaneakua
- Lorraine Luuloa
- Leilani Wallace
- Doreen Gaspar

## 4.0 RESULTS

The CIA interview results are organized according to five topical domains. Some of these domains were identified early in the planning process and constitute common research domains, while others are specific to the project area and its distinctly coastal character.

### 4.1 Marine Resources: Gathering and Fishing

Kapa'akea Hawaiian Homesteads is fundamentally a coastal community and it is therefore no surprise that near-shore marine resources and harvesting activities are among the most significant concerns to its native Hawaiian residents. Marine resources and the subsistence gathering and fishing practices that revolve around them have been central to the Hawaiian lifestyle from time immemorial and continue to be so today. Kapa'akea Ahupua'a has approximately one kilometer of coastline which originally supported salt flats and a fishpond. Perhaps more significantly, the near-shore waters provide excellent gathering and fishing grounds extending out approximately a mile from the shore. Consultant Georgette Kaneakua is an active practitioner of traditional marine gathering and reef gleaning and testified to the importance of these activities to the Hawaiian community of Kapa'akea. Ms. Kaneakua collects mollusks and many varieties of *limu* from the waters fronting Kapa'akea Homestead. This is a very common cultural practice by many community members. In addition, hook and line, net, and spear fishing are also regular activities in these coastal waters. Marine fishing and gathering are daily and weekly activities and fishermen could be seen out in the waters during the site visit. Many homesteaders have shallow-draft boats which they launch directly along the waterfront.

#### *4.1.1 Impact Assessment*

Although traditional subsistence gathering and fishing are still widely practiced in the vicinity of the proposed action, ethnographic consultants indicated that these activities would not be affected by the project. The flood mitigation wall, as currently designed, follows the western boundary of the Kapa'akea Homestead development, perpendicular to the shoreline. It creates no access impediment to the local waters and will not adversely impact the near-shore marine resources. The western boundary of the residential development borders a private lot and there was no indication that cultural or natural resources, marine or otherwise, are accessed in that direction. Public access to the shore is currently through four corridors spaced evenly along the Kapa'akea Homestead coastal frontage. These will continue to provide access to marine resources for the local community.

### 4.2 Fresh Water Spring

Fresh water springs are mentioned in many Hawaiian *mo'olelo* and have always been a very important resource in Hawaiian culture. Kapa'akea once contained a spring just *mauka* of the shoreline, along the perimeter of Kapa'akea Fishpond. This spring was significant enough to be recorded on a map of American Sugar Co. improvements dating to 1900 (Figure 10). Although ethnographic consultants were well aware of a spring in this locale, it appears to have been destroyed or obscured when Kapa'akea Fishpond was filled in.

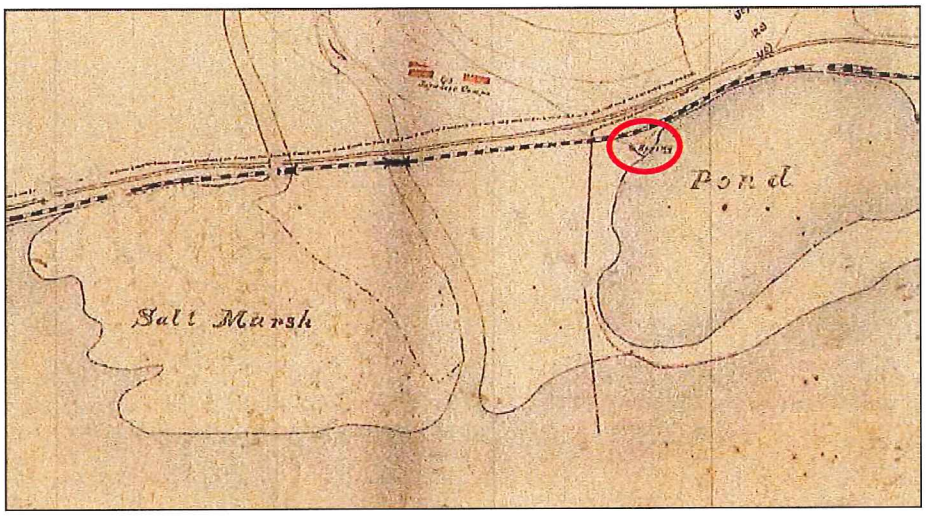


**Figure 9. Location of spring on *mauka* side of Kap'akea Fishpond (red oval). Detail of May 1900 *Map of Kaunakakai and Vicinity showing improvements of the American Sugar Co.***

#### *4.2.1 Impact Assessment*

There is presently no active use of the Kapa'akea spring by the local community. It is located a significant distance from the proposed action and any cultural use or practices associated with it would therefore not be impacted. The consultants did not express any concern about the spring relative to the proposed action.

### 4.3 Religio-Spiritual Activities

Consultants did not express any knowledge of traditional religious or spiritual sites, such as *heiau* or *iwi kupuna*, in the vicinity of the proposed action. This agrees with the documentary background research, which indicated an absence of such sites. When questioned about the possibility of *iwi kupuna*, consultants stated that they did not believe there had been any traditional-style burials in this area since it was reclaimed. Any early *iwi kupuna* would likely be located *mauka*, but none were identified by the interviewees. Consultant Leilani Wallace did express concern for the maintenance of *mauka-makai* cultural "pathways" which she believes run concomitant with the former river courses (now drainage ditches) that run through the homestead. She related a story of a neighbor who had placed a large *pōhaku* in one of the waterways, after which there was a spike in sickness and ill health. When the stone was subsequently removed, the situation returned to normal. The interpretation of these events, following traditional epistemology, was that a cultural "pathway" had been blocked, thereby causing bad effects for the community. Mrs. Wallace felt that such considerations should be kept in mind when designing projects.

#### *4.3.1 Impact Assessment*

Consultants did not identify any religio-spiritual practices or sites in the area that would be adversely affected by the project. Concern over maintenance of clear *mauka-makai* cultural

"pathways" was centered on the courses of former waterways, all located well east of the proposed action. These would not be affected by its construction.

## 4.4 Salt Gathering

Given the former presence of a salt marsh adjacent to and possibly within the fill area that is now Kapa'akea Homesteads, consultants were asked specifically about salt collecting in the vicinity as a current cultural practice. The answer was negative. Although salt deposits are clearly visible on the parcel adjacent to the proposed flood control wall (Figure 11), these have been recently created as part of a "wetlands" bird preserve by a private landowner and are not exploited by the Hawaiian community. Traditional salt gathering likely ended when the land was filled, if not earlier. Consultants did note that the former Kapa'akea salt flats were likely harvested and controlled by the a*li'i* who also maintained Kapa'akea Fishpond.

### *4.4.1 Impact Assessment*

Salt gathering is not currently a practice that will be affected by the proposed project. If, in the future, salt from the adjacent "wetlands" becomes available, there remain many available access points. The presence of the flood control wall will not unduly burden this cultural practice. Most importantly, the Hawaiian consultants did not express any concern over this resource relative to the proposed action.




**Figure 10. Aerial image from 2012 showing salt deposits (red circle) near the project area (blue L-shaped line).**

## 4.5 Places of Traditional Importance

Interviews with knowledgeable local consultants did not produce any evidence of places of traditional importance that would be impacted by the project. The project footprint is entirely on reclaimed land dating to the Twentieth Century. Consultants did note the traditional importance of the general area and it's association with ruling *ali'i*. *Mo'olelo* mention the use of the former small bay (now entirely filled) as a beaching site for canoes in the days of Kamehameha I and earlier. Kapa'akea was also the site of a meeting between the famous Kauai *ali'i* Ka'iana and his fellow chief Kalanimoku. This happened just before Ka'iana formally severed his allegiance to Kamehameha I to support Kalanikpule, the *ali'i 'ai moku* of O'ahu. According to Desha:

> After his conversation with the *ali'i wahine* Nāmāhana [mother of Ka'ahumanu], he bade her farewell and left that place [Kamilola, adjacent to Kapa'kea]. While he was passing Kapa'akea where Kalanimoku was encamped with his army, this bald-headed ali'i saw him, his companion of the battlefield. Affection welled up in him and he called to Ka'iana saying: "*E 'iwi'ula ē! E 'iwi'ula ho'i ē!* Come hither and eat!" When Ka'iana heard Kalanimoku calling him, he took advantage of the invitation by his chiefly comrade. [Desha 2000:405]

The ensuing meeting at Kapa'akea helped cement Ka'iana's change of allegiance. One can only imagine the sight of a full war party encamped on the shores of Kapa'kea—and up and down the coastline as well: "On the arrival of Kamehameha's war fleet at Kaunakahakai, the shore from Kaunakahakai to Kalama'ula was covered by his canoes." This general area, including Kaunakakai with its many fishponds, salt flats, and former *heiau*, was clearly a central gathering place for chiefs and their retinues. Liston points out that:

> The channel through the reef in front of Kaunakakai attracted chiefs during the proto-historic and early historic period wars for domination as a location for their large military encampments and high-status meetings. This traditional sociopolitical importance of the Kaunakakai area is expressed by the presence of four heiau (Mahinahina, Kamalae, 'Opae'ula, and Pu'upapa'i), now destroyed, in the immediate vicinity. This area was so centrally located and easily accessed that Kamehameha V established his vacation retreat, Mālama, at Kaunakakai. [Liston 2016:32]

Mālama Cultural Park, former residence of Kamehameha V, is a further testament to the enduring attraction of this coastal area for ruling *ali'i*. Certainly Kapa'akea was secondary to Kaunakakai, but it was no doubt similarly valued for its anchorage, fresh water spring, and fishpond. This historical significance is reaffirmed and maintained by the Hawaiians now living at Kapa'akea. Although these historical associations were not identified as resources that would be impacted by the proposed undertaking, they remain important to the local population and provide context for their worldview and sense of place.

### *4.4.4 Impact Assessment*

The Kapa'akea coastline was a significant place in the pre-Contact and early historic period and was frequented by *ali'i* during a critical period in Kamehameha I's consolidation of power in Hawai'i. The immediate vicinity of the proposed action was a docking locale for canoes at this time and likely much earlier as well. However, consultation with locally knowledgeable Hawaiians indicates that the proposed project will not adversely impact any traditional cultural or historical

place. The landscape in this area is already highly modified and the former canoe landing spot has long since been obliterated.

## 5.0 Conclusions

Background literature research and interviews with locally knowledgeable individuals indicate that the area surrounding the Kapa'akea Flood Mitigation project was once significant as an area frequented by *ali'i*, particularly during Kamehameha I's rise to power. As with nearby Kaunakakai, the coastline at Kapa'akea has been almost completely altered, mainly through filling of the near-shore waters in the early to mid-Twentieth Century. This has filled in Kapa'akea Fishpond to the east and has covered the former stream outflow and salt marsh once present near the proposed project area. No cultural or spiritual sites, such as *heiau*, are presently known in the vicinity of the project area and no traditional practices associated with such sites were mentioned in the interviews. Despite the dramatic changes to the landscape over the past century, Hawaiians at Kapa'akea continue to conduct traditional marine subsistence gathering and fishing activities. These were the most significant cultural practices mentioned during the consultation interviews. However, the consultants made explicitly clear that they felt that the proposed action would have no negative effect to these practices. The proposed flood mitigation wall does not inhibit access to marine resources, nor will it impact them in any foreseeable way. Overall, the proposed action was seen as a net benefit to the community. Construction of the flood wall would allow the Hawaiian community at Kapa'akea to survive (physically and financially) the recurrent flooding episodes and thereby allow them to maintain their traditional cultural practices into the future.

Consultant interviews conducted for this CIA did not produce any evidence of cultural practices or resources that would be impacted by the project. It is therefore the conclusion of this assessment that the project will have no significant impact on traditional Hawaiian cultural practices or resources.

## 6.0 References


Armstrong, R.W. and J.A. Bier
1973 *Atlas of Hawaii*. Department of Geography, University of Hawai'i, Manoa, Hawai'i.

Athens, J.S.
1983 *Archaeological and Historical Investigations at a Property Near Kaunakakai Wharf, Island of Moloka'i, Hawai'i*. Prepared for Alu Like, Inc. J. Stephen Athens, Archaeological Consultant, Honolulu.

1985 *Prehistoric Investigations at an Upland Site on the Leeward Slopes of Central Moloka'i*. Prepared for the Department of Hawaiian Homelands. International Archaeological Research Institute, Inc., Honolulu.

Byerly, D and J. Liston
2013 *Archaeological Inventory Survey of Two 0.5 Acre Parcels, Mapulehu Ahupua'a, Kona District, Island of Moloka'i, Hawai'i*. Prepared for Janet Place. Garcia and Associates, Kailua, Hawai'i.

Davis, B.D.
1977 *Cultural Reconnaissance Report Kapa'akea Homestead Flood Control Project, Kapa'akea, Moloka'i Island, Hawai'i.* Archaeological Research Center Hawaii, Inc., Honolulu.

Denham, T., F.J. Eblé, B. Winsborough, and J.V. Ward
1999 Paleoenvironmental and archaeological investigations at Ōhi'apilo Pond, leeward coast of Moloka'i. *Hawaiian Archaeology* 7:35–59.

Desha, S.L.
2000 Kamehameha and his Warrior Kekūhaupi'o. Kamehameha Schools Press, Honolulu.

Dixon B., M. Major, M. Price, A. Carpenter, C. Stine, and B. Longton
1994 Lithic tool production and dryland planting adaptations to regional agricultural intensification: preliminary evidence from leeward Moloka'i, Hawai'i. *Bishop Museum Occasional Papers* 39:1–19.

Dye, T.
1977 *Cultural Resource Survey, Kapa'akea Flood Control Project, Moloka'i, Hawai'i.* Department of Anthropology, Bernice P. Bishop Museum, Honolulu.

Dye, T.S. and E.H.R. Jourdane
2006 *Archaeological Assessment for the Proposed Verizon Wireless H12 Kaunakakai Cell Site VZW No. 2004005296, Moloka'i Education Center, 375 Kamehameha V Highway, Kaunakakai, Kona District, Moloka'i, Hawai'i (TMK 5-3-03:014).* Prepared for Clayton Group Services. T.S. Dye Colleagues, Inc., Honolulu.

Fornander, A.
1916–1917 *Fornander Collection of Hawaiian Antiquities and Folk-lore: The Hawaiian Account of the Formation of their Islands and Origin of their Race with the Traditions of their Migrations, Etc. as Gathered from Original Sources.* Bishop Museum Press, Honolulu.

Giambelluca, T.W., Q. Chen, A.G. Frazier, J.P. Price, Y.-L. Chen, P.-S. Chu, J.K. Eischeid, and D.M. Delparte
2013 Online Rainfall Atlas of Hawai'i. *Bulletin of the American Meteorological Society* 94, 313-316, doi: 10.1175/BAMS-D-11-00228.1. Accessed August 5, 2015.

Graham, W.L.
2006 *Braided Waters: Environment, Economy, and Community in Moloka'i, Hawai'i.* Unpublished PhD dissertation. University of California, Los Angeles.

Hammatt, H.
2008 *Archaeological Monitoring Plan for Three Schools within the Moloka'i School Complex Hawai'i Inter-Island DOE Cesspool Project.* Cultural Surveys Hawai'i Inc. Wailuku, Hawai'i.

Kamakau, S.M.
1961 *Ruling Chiefs of Hawai'i.* The Kamehameha Schools Press, Honolulu.

Kelly, M.
1976 Dynamics of production intensification in Precontact Hawai'i. In: *What's New? A Closer Look at the Process of Innovation*, S. van der Leeuw and R. Torrence (eds.), pp. 82–106. Unwin Hyman, Boston.

Kikuchi, W.K.
1976 Prehistoric Hawaiian fishponds. *Science* 193:295–299.

Kirch, P.V.
2010 *How Chiefs Became Kings: Divine Kingship and the Rise of Archaic States in Ancient Hawai'i.* University of California Press, Berkeley.

Kirch P.V. (ed.)
2002 *From the 'Cliffs of Keolewa' to the 'Sea of Papaloa': An Archaeological Reconnaissance of Portions of the Kalaupapa National Historical Park, Moloka'i, Hawaiian Islands.* Berkeley Archaeological Research Facility, Oceanic Archaeology Laboratory Special Publication No. 2. University of California, Berkeley.

Leech, B.L.
2002 Asking Questions: Techniques for Semistructured Interviews. *Political Science and Politics* 35(4):665–668.

Liston, J and J. Robins
2016 FINAL— Revised Archaeological Monitoring Plan for Former Kaunakakai Chevron Bulk Storage Terminal, Kaunakakai Ahupua'a, Kona District, Moloka'i Island, Hawai'i. GANDA Report No. 2289-1. Prepared for URS Corporation, Honolulu. Garcia and Associates, Kailua, Hawaii.

Madeus, J.K.
2010 A*n Archaeological Monitoring Report for the Kaunakakai Elementary School Grease Interceptor and Four Inch Sewer Line Installation and Replacement Project Kaunakakai Ahupua'a, Kona District, Moloka'i Island (TMK [2] 5-3-02:052).* Prepared for CH2MHill.

McCoy, M.D.
2007 A revised late Holocene culture history for Moloka'i Island, Hawai'i. *Radiocarbon* 49(3):1273–1322.

McElroy, W.K., M. Elison, and R. Kapoi-Keli'i
2013 *Archaeological Assessment for Improvements to Duke Maliu Regional Park, Kaunakakai Ahupua'a, Kona District, Island of Moloka'i TMK: (2) 5-3-003:012.* Prepared for County of Maui, Department of Parks and Recreation Department. Keala Pono Archaeological Consulting, Kaneohe, Hawai'i.

McGerty, L. and R.L.Spear
2006 *An Archaeological Assessment Report for an Approximately 5-Acre Parcel in Kaunakakai Ahupua'a, Moloka'i, Hawai'i.* Scientific Consultant Services, Wailuku, Hawai'i.

Medrano, S. and M.F. Dega
2013 *An Archaeological Monitoring Report for the Duke Maliu Regional Park Project Kaunakakai Ahupua'a, Kona District Moloka'i Island, Hawai'i (TMK 5-3-003:012).* Prepared for the Department of Parks and Recreation. Scientific Consultant Services, Inc., Honolulu.

O'Day, P. and D. Byerly
2015 FINAL—Archaeological Assessment in Support of the Department of Hawaiian Homelands Kapa'akea Flood Mitigation Improvements, Kapa'akea Ahupua'a, Kona District, Island of Moloka'i, Hawai'i. GANDA Report No. 2341-1. Prepared for Mitsunaga & Associates, Inc., Honolulu. Garcia and Associates, Kailua, Hawai'i.

Perzinski, D. and M. Dega
2011 *An Archaeological Monitoring Report for DHHL Kapa'akea On-Site Drainage Improvements, Kapa'akea Ahupua'a, Kona District, Moloka'i Island, Hawai'i.* Scientific Consultant Services, Inc., Honolulu.

Roberts, L.
2001 Historical Land Use, Coastal Change, and Sedimentation on South Moloka'i Reefs. *Recent Advances in Marine Science and Technology*, 9th Pacific Congress on Marine Science and Technology: PACON 2000. pp. 167-176. Honolulu.

Schmitt, R.C.
1977 *Historical Statistics of Hawaii*. University of Hawai'i Press, Honolulu.

Sherrod, D.R., J.M. Sinton, S.E. Watkins, and K.M. Brunt
2007 *Geologic Map of the State of Hawaii*. Open File Report 2007-1089.U.S. Geological Survey, Washington, D.C.

Silva, C.L.
1983 *Historic Document Search: Archaeological and Historical Investigations at a Property Near Kaunakakai Wharf, Island of Moloka'i, Hawai'i*. Prepared for Alu Like, Inc. J. Stephen Athens, Archaeological Consultant, Honolulu.

Spradley, J.
1979 *The Ethnographic Interview*. Holt, Rinehart, & Winston, New York.

Spitz, A.
1964 *Land Aspects of the Hawaiian Homes Program*. Report No. 1b, Legislative Reference Bureau.

Stearns H.T. and G.A. Macdonald
1947 *Geology and Ground-Water Resources of the Island of Molokai, Hawaii*. Bulletin 11 Hawaii Division of Hydrography.

Strazar, M.D.
2000 *Moloka'i in History: A Guide to the Resources*. Prepared by the History and Humanities Program of the Hawai'i State Foundation on Culture and the Arts.

Summers, C.C.
1971 *Moloka'i, A Site Survey*. Pacific Anthropological Records No. 14. Department of Anthropology, Bernice P. Bishop Museum, Honolulu.

Tuggle, D.H.
1993 *Kamiloloa Archaeology: Data Recovery and Site Inventory for a Portion of Kamiloloa, Island of Moloka'i, Hawai'i*. Prepared for the Department of Hawaiian Home Lands, State of Hawai'i, Honolulu. International Archaeological Institute, Inc., Honolulu.

United States Department of Agriculture (USDA)
2013 Soil Survey Staff, Natural Resources Conservation Service, United States Department of Agriculture. Web Soil Survey. Available online at http://websoilsurvey.nrcs.usda.gov/. Accessed August, 5, 2015.

Weisler, M.
1989 Chronometric dating and Late Holocene prehistory in the Hawaiian Islands: A critical review of radiocarbon dates from Moloka'i Island. *Radiocarbon* 31(2):121–45.

2011 A quarried landscape in the Hawaiian Islands. *World Archaeology* 43(2):298–317.

# APPENDIX H.

# Wetland Study

# Wetland Study

# Department of Hawaiian Home Lands

# Kapa'akea Flood Mitigation Project

# Kapa'akea, Moloka'i

by

Robert W. Hobdy
Environmental Consultant
Koakomo, Maui
January 2016

Prepared for:
State of Hawaii
Department of Hawaiian Home Lands

## INTRODUCTION

The Department of Hawaiian Home Lands (DHHL) Kapa'akea Flood Mitigation Project is located 0.75 miles to the east of Kaunakakai Town below Kamehameha V Highway. The project area includes five DHHL lots (TMK's (2) 5-4-07:9, 10, 11, 24, 25) that total approximately 2.5 acres and stretch from the Highway down to the shoreline (see Figures 1 and 2). Bordering the project area to the west is the Kōheo Wetland. This flood mitigation project calls for the construction of a concrete retaining wall between the DHHL lots and the Kōheo Wetland to protect the lots from potential flooding. This wetland study was initiated to determine and delineate the wetland boundary relative to the western edge of the DHHL lots.

## BACKGROUND HISTORY

Kōheo Wetland is located in a low spot on the coastal plain at the boundary between Kaunakakai and Kapa'akea. It is fed by ground water, local rainfall and receives runoff from a small ephemeral unnamed gully above the highway. It only flows during heavy rainfall events. When this gully reaches the coastal plain it disappears and any runoff spreads out as sheet flow. At the highway the water accumulates as temporary ponding due to inadequate drainage features until it over flows down slope into the wetland.

The Kapa'akea Homesteads were established along the coastal plain, with the first lots being awarded in 1950. The lots adjacent to the wetland were lower in elevation and were prone to periodic temporary flooding during high rainfall events. Fill material was brought in and spread on these lots to build up the surface elevations one to two feet to minimize flood damages. This resulted in a clear, rather straight boundary line that slopes down into the wetland from the DHHL lots (Figures 4 & 5). The proposed construction of a concrete wall is intended to eliminate this threat.

The entire Kōheo Wetland was delineated in a 2005 study that was submitted to the U.S. Army Corps of Engineers. The 2005 study found the eastern boundary of the wetland to roughly approximate the lower toe of the slope below the DHHL boundary. This study, however, has exceeded its 5-year sunset date and a portion of the eastern boundary is here reassessed to accommodate any potential recent changes relative to the project boundary.

## SURVEY OBJECTIVES

This report summarizes the findings of a wetland determination process in accordance with the Corps of Engineers Wetlands Delineation Manual (1987) and the Regional Supplement to the Corps of Engineers Wetland Delineation Manual: Hawaii and Pacific Islands Regional (2012). Work consisted of following set procedures, conducting tests and making observations in order to determine the presence or absence of indicators of hydrophytic vegetation, hydric soils and wetland hydrology with the goal of making a definitive determination as to whether a wetland exists on the property and to delineate the boundaries of any such wetland. This wetland boundary will then be shown relative to the DHHL Homestead boundary and the proposed alignment of the concrete flood mitigation wall.

## SURVEY METHODS

Procedures required the assessment and characterization of vegetation, the excavation of soil pits for the analysis of soil types, and the documentation of indicators of wetland hydrology following U.S. Corps of Engineers Guidelines.

Equipment and tools used included:

- 3 inch diameter hand auger
- Sharpshooter shovel
- Wooden stakes
- Hammer
- Hand Level
- Tape measure
- Camera
- Munsell soil color charts
- Machete
- Corps of Engineers Wetlands Delineation Manual (U.S.A.C.E. 1987) and the Regional Supplement to the Corps of Engineers Wetland Delineation Manual: Hawaii and Pacific Islands Region (2012).
- National List of Plants that Occur in Wetlands: Hawaii (Region H) 2004
- Plastic flagging
- Spray marking paint

### Preliminary Data Gathering and Synthesis

The following sources of information were utilized in the preparation of this report:

- USGS topographic maps and other maps: 1900, 1924, 1952, 1983
- High elevation aerial photography: 1975, 2012
- SCS (NRCS) Soil Survey, 1972.
- Local individuals and experts with special knowledge of the history, conditions and environmental functioning of the subject area and surroundings.

These sources are referenced in this report or included in the appendix as appropriate. Six sampling points were selected outside the project area along the lower slope below the western boundary of the DHHL lots where it appeared to be close to being a wetland. At each site a soil pit was dug and wetland analysis performed. This study just addresses the eastern edge of the Kōheo Wetland where it is close to the project area.

## RESULTS

Six sampling points were established a little outside the west boundary of the project area in a line running from below the highway down toward the shoreline (see Figure 2). Each of these were analyzed for wetland characteristics as described above. Sampling points 1 through 5 were found to lie just outside the margin of the wetland, while sampling point 6 was just within the margin of the wetland. From this information a proposed wetland boundary was determined and is delineated as shown in Figure 2. This wetland boundary line lies entirely outside of the DHHL Kapa'akea Flood Mitigation Project boundary by distances ranging from 20 feet at the top to 8 feet near the shoreline. The Wetland Determination Data Forms and analyses are presented below.

## WATERS OF THE U.S. ANALYSIS

The DHHL Kapa'akea Flood Mitigation Project lies on approximately 2.5 acres of coastal plain between two gullies that drain into the Pacific Ocean (see Figure 3). To the west is a small unnamed ephemeral gully that drains about 50 acres of land on the slopes of Pu'u Maninikolo and terminates at the Kōheo Wetland adjacent to the shoreline. To the east is a larger unnamed ephemeral gulch that drains about 250 acres above the Kapa'akea Cemetery and runs through the DHHL Kapa'akea Homesteads to the ocean.

An eleven acre area between the two adjacent drainages lies on nearly level land on the coastal plain and includes five acres of undeveloped grass land and kiawe (*Prosopis pallida*) forest above Kamehameha V Highway and six acres of the residential Kapa'akea Homesteads community below the highway to the shoreline. This eleven acre area has no drainage channels and no wetlands. The 2.5 acre project area lies wholly within this eleven acre area. The companion wetland study found the boundary of Kōheo Wetland to lie entirely outside the western side of the project area as is the drainage that feeds it. The unnamed drainage to the east has no wetlands associated with it. Because this project area clearly has no aquatic resources within it or directly abutting its boundary, there is nothing to assess and the use of an Approved Jurisdictional Determination Form is deemed to be unnecessary.

The entire 2.5 acre DHHL Kapa'akea Flood Mitigation project is determined to be an upland site with no aquatic resources that would qualify it as a Waters of the U.S.

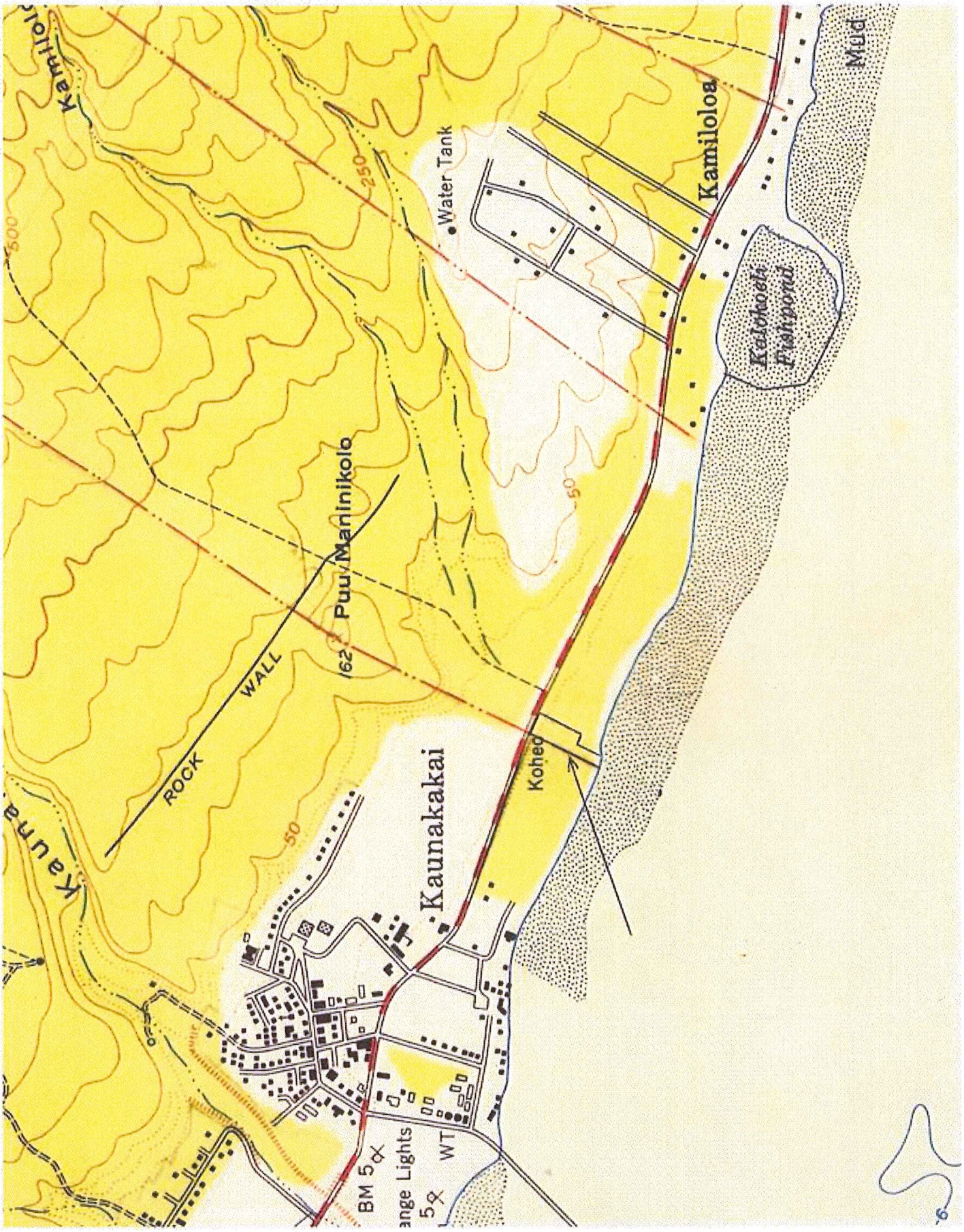


Figure 1. DHHL Kapa'akea Flood Mitigation Project (1952 USGS Kaunakakai Quadrant Map)




Figure 2.

---------- DHHL Kapa'akea Flood Mitigation Project boundary

---------- Proposed concrete wall along west and north boundaries of project area.

- - - - - - - - - - > Runoff flow pattern of unnamed drainage along west boundary of project area.

③——④——⑤ Numbered sampling points and proposed wetland boundary




Figure 3

---------- DHHL Kapa'akea Flood Mitigation Project Area

- - - - - - - - - - Ephemeral stream storm water flow from adjacent unnamed gullies

---------- Watershed boundaries of adjacent unnamed gullies



Figure 4. View northeast across the project boundary into the DHHL Lots, showing their developed residential character.



Figure 5. View north along project boundary. The proposed wetland boundary is indicated by red stakes which are located near the toe of the slope below the elevated DHHL lots.

## WETLAND DETERMINATION DATA FORM – Hawai'i and Pacific Islands Region

Project/Site: DHHL Kapaakea Flood Mitigation Project City: Kaunakakai Sampling Date: 1-28-16 Time: 0800

Applicant/Owner: Department of Hawaiian Home Lands State/Terr/Comm: Hawaii Island: Molokai Sampling Point: 1

Investigator(s): Robert Hobdy TMK/Parcel: (2) 5-4-07: 9, 10, 11, 24, 25

Landform (hillslope, coastal plain, etc.): Coastal Plain Local relief (concave, convex, none): Concave

Lat: 21° 05' 05.49" N Long: 157° 00' 45.60" W Datum: WGS Slope (%): 0-1%

Soil Map Unit Name: Keaiwa Silt Loam NWI classification: PEMIR

Are climatic / hydrologic conditions on the site typical for this time of year? Yes X No ____ (If no, explain in Remarks.)

Are Vegetation No Soil No, or Hydrology No significantly disturbed? Are "Normal Circumstances" present? Yes X No ____

Are Vegetation No, Soil No, or Hydrology No naturally problematic? (If needed, explain any answers in Remarks.)

### SUMMARY OF FINDINGS – Attach site map showing sampling point locations, transects, important features, etc.

| | | | |
|---|---|---|---|
| Hydrophytic Vegetation Present? | Yes ____ | No X | Is the Sampled Area within a Wetland? Yes ____ No X |
| Hydric Soil Present? | Yes ____ | No X | |
| Wetland Hydrology Present? | Yes ____ | No X | |

Remarks: This sampling point experiences short-term overflow runoff from Kamehameha V Highway following heavy rainfall events which continues laterally down into Kakeo wetland. While not a wetland, it lies close to the wetland boundary.

### VEGETATION – Use scientific names of plants.

| Tree Stratum (Plot size: 30 ft radius) | Absolute % Cover | Dominant Species? | Indicator Status |
|---|---|---|---|
| 1. Prosopis pallida | 60 | Yes | FACU |
| 2. | | | |
| 3. | | | |
| 4. | | | |
| 5. | | | |
| | 60 = Total Cover | | |
| **Sapling/Shrub Stratum** (Plot size: 30 ft radius) | | | |
| 1. Pluchea indica | 4 | Yes | FAC |
| 2. | | | |
| 3. | | | |
| 4. | | | |
| 5. | | | |
| | 4 = Total Cover | | |
| **Herb Stratum** (Plot size: 30 ft radius) | | | |
| 1. Cynodon dactylon | 5 | Yes | FACU |
| 2. Chenopodium murale | 1 | Yes | FACU |
| 3. | | | |
| 4. | | | |
| 5. | | | |
| 6. | | | |
| 7. | | | |
| 8. | | | |
| | 6 = Total Cover | | |
| **Woody Vine Stratum** (Plot size: ____) | | | |
| 1. | | | |
| 2. | | | |
| | 0 = Total Cover | | |

**Dominance Test worksheet:**

Number of Dominant Species That Are OBL, FACW, or FAC: 1 (A)

Total Number of Dominant Species Across All Strata: 4 (B)

Percent of Dominant Species That Are OBL, FACW, or FAC: 25% (A/B)

**Prevalence Index worksheet:**

| Total % Cover of | | Multiply by: | |
|---|---|---|---|
| OBL species | 0 | x 1 = | 0 |
| FACW species | 0 | x 2 = | 0 |
| FAC species | 4 | x 3 = | 12 |
| FACU species | 66 | x 4 = | 264 |
| UPL species | 0 | x 5 = | 0 |
| Column Totals | 70 (A) | | 276 (B) |

Prevalence Index = B/A = 3.94

**Hydrophytic Vegetation Indicators:**

No 1 - Rapid Test for Hydrophytic Vegetation

No 2 - Dominance Test is >50%

No 3 - Prevalence Index is ≤3.0[1]

No 4 - Problematic Hydrophytic Vegetation[1] (Explain in Remarks or in the delineation report)

[1]Indicators of hydric soil and wetland hydrology must be present, unless disturbed or problematic.

**Hydrophytic Vegetation Present?** Yes ____ No X

Remarks:
This sampling point lies near the edge of a broad drainage channel that flows from Kamehameha V Highway into Kakeo wetland. The vegetation was largely facultative upland in character.

## SOIL

Sampling Point: 1

**Profile Description:** (Describe to the depth needed to document the indicator or confirm the absence of indicators.)

| Depth (inches) | Matrix Color (moist) | % | Redox Features Color (moist) | % | Type[1] | Loc[2] | Texture | Remarks |
|---|---|---|---|---|---|---|---|---|
| 0-18 | 2.5YR 3/4 | 100 | — | — | — | — | silt loam | vesicular, dark reddish brown |
| 18-24 | 2.5YR 4/4 | 100 | — | — | — | — | clay loam | saturated, dark reddish gray |
| | | | | | | | | |
| | | | | | | | | |
| | | | | | | | | |
| | | | | | | | | |
| | | | | | | | | |

[1]Type: C=Concentration, D=Depletion, RM=Reduced Matrix, MS=Masked Sand Grains. [2]Location: PL=Pore Lining, M=Matrix.

**Hydric Soil Indicators:**

- ___ Histosol (A1)
- ___ Histic Epipedon (A2)
- ___ Black Histic (A3)
- ___ Hydrogen Sulfide (A4)
- ___ Muck Presence (A8)
- ___ Depleted Below Dark Surface (A11)
- ___ Thick Dark Surface (A12)
- ___ Sandy Gleyed Matrix (S4)
- ___ Sandy Redox (S5)
- ___ Dark Surface (S7)
- ___ Loamy Gleyed Matrix (F2)
- ___ Depleted Matrix (F3)
- ___ Redox Dark Surface (F6)
- ___ Depleted Dark Surface (F7)
- ___ Redox Depressions (F8)

**Indicators for Problematic Hydric Soils[3]:**

- ___ Stratified Layers (A5)
- ___ Sandy Mucky Mineral (S1)
- ___ Red Parent Material (F21)
- ___ Very Shallow Dark Surface (TF12)
- ___ Other (Explain in Remarks)

[3]Indicators of hydrophytic vegetation and wetland hydrology must be present, unless disturbed or problematic.

**Restrictive Layer (if observed):**

Type: None

Depth (inches): ___

**Hydric Soil Present?** Yes ___ No X

Remarks:

The soil at this site does not have any positive indicators of a hydric soil.

## HYDROLOGY

**Wetland Hydrology Indicators:** (Explain observations in Remarks, if needed.)

Primary Indicators (minimum of one required; check all that apply)

- ___ Surface Water (A1)
- ___ High Water Table (A2)
- ___ Saturation (A3)
- ___ Water Marks (B1)
- ___ Sediment Deposits (B2)
- ___ Drift Deposits (B3)
- ___ Algal Mat or Crust (B4)
- ___ Iron Deposits (B5)
- ___ Inundation Visible on Aerial Imagery (B7)
- ___ Water-Stained Leaves (B9)
- ___ Aquatic Fauna (B13)
- ___ Tilapia Nests (B17)
- ___ Hydrogen Sulfide Odor (C1)
- ___ Oxidized Rhizospheres on Living Roots (C3)
- ___ Presence of Reduced Iron (C4)
- ___ Recent Iron Reduction in Tilled Soils (C6)
- ___ Thin Muck Surface (C7)
- ___ Fiddler Crab Burrows (C10) (Guam, CNMI, and American Samoa)
- ___ Other (Explain in Remarks)

Secondary Indicators (minimum of two required)

- ___ Surface Soil Cracks (B6)
- ___ Sparsely Vegetated Concave Surface (B8)
- ___ Drainage Patterns (B10)
- ___ Dry-Season Water Table (C2)
- ___ Salt Deposits (C5)
- ___ Stunted or Stressed Plants (D1)
- ___ Geomorphic Position (D2)
- ___ Shallow Aquitard (D3)
- ___ FAC-Neutral Test (D5)

**Field Observations:**

Surface Water Present? Yes ___ No X Depth (inches):

Water Table Present? Yes X No ___ Depth (inches): 22 in.

Saturation Present? (includes capillary fringe) Yes X No ___ Depth (inches): 18 in

**Wetland Hydrology Present?** Yes ___ No X

Describe Recorded Data (stream gauge, monitoring well, aerial photos, previous inspections), if available:

Remarks:

This site floods for short periods following heavy rainfall events but groundwater levels retreat to depths that prevent the development of positive indicators of wetland hydrology.



Sampling Point 1A. Upper edge of wetland. Inflow from the Kamehameha V Highway is aligned with the telephone pole. The elevated DHHL project boundary is along the fenceline on the right



Sampling Point 1B. Dark reddish-brown silt loam over dark reddish gray clay loam. Soil saturated at 18 inches, water table at 22 inches.

## WETLAND DETERMINATION DATA FORM – Hawai'i and Pacific Islands Region

Project/Site: DHHL Kapa'akea Flood Mitigation Project City: Kapa'akea Sampling Date: 1-28-16 Time: 0830

Applicant/Owner: Department of Hawaiian Home Lands State/Terr/Comm.: Hawaii Island: Moloka'i Sampling Point: 2

Investigator(s): Robert Hobdy TMK/Parcel: (2)5-4-07:9,10,11,24,25

Landform (hillslope, coastal plain, etc.): Coastal Plain Local relief (concave, convex, none): Concave

Lat: 21°05'04.92" N Long: 157°00'45.23" W Datum: WGS 84 Slope (%): 0-1%

Soil Map Unit Name: Kealia Silt Loam NWI classification: PEMI3

Are climatic / hydrologic conditions on the site typical for this time of year? Yes X No ____ (If no, explain in Remarks.)

Are Vegetation Yes, Soil No or Hydrology No significantly disturbed? Are "Normal Circumstances" present? Yes X No ____

Are Vegetation No, Soil No or Hydrology No naturally problematic? (If needed, explain any answers in Remarks.)

### SUMMARY OF FINDINGS – Attach site map showing sampling point locations, transects, important features, etc.

| | | | |
|---|---|---|---|
| Hydrophytic Vegetation Present? | Yes X | No ____ | Is the Sampled Area within a Wetland? Yes ____ No X |
| Hydric Soil Present? | Yes ____ | No X | |
| Wetland Hydrology Present? | Yes ____ | No X | |

Remarks: The boundary of the DHHL lot stands about 2 ft. higher than this sampling point which is near the base of the slope between them.

### VEGETATION – Use scientific names of plants.

| Tree Stratum (Plot size: 30 ft radius) | Absolute % Cover | Dominant Species? | Indicator Status |
|---|---|---|---|
| 1. Prosopis pallida | 40 | Yes | FACU |
| 2. | | | |
| 3. | | | |
| 4. | | | |
| 5. | | | |
| | 40 = Total Cover | | |
| **Sapling/Shrub Stratum** (Plot size: 30 ft radius) | | | |
| 1. Pluchea indica | 20 | Yes | FAC |
| 2. Pluchea carolinensis | 5 | Yes | FAC |
| 3. | | | |
| 4. | | | |
| 5. | | | |
| | 25 = Total Cover | | |
| **Herb Stratum** (Plot size: 30 ft radius) | | | |
| 1. Cynodon dactylon | 15 | Yes | FACU |
| 2. Megathyrsus maximus | 5 | Yes | FAC |
| 3. Chloris barbata | 1 | No | FACU |
| 4. Heliotropium curassavicum | 1 | No | FAC |
| 5. | | | |
| 6. | | | |
| 7. | | | |
| 8. | | | |
| | 22 = Total Cover | | |
| **Woody Vine Stratum** (Plot size: ____) | | | |
| 1. | | | |
| 2. | | | |
| | 0 = Total Cover | | |

**Dominance Test worksheet:**

Number of Dominant Species That Are OBL, FACW, or FAC: 3 (A)

Total Number of Dominant Species Across All Strata: 5 (B)

Percent of Dominant Species That Are OBL, FACW, or FAC: 60% (A/B)

**Prevalence Index worksheet:**

| Total % Cover of: | | Multiply by: | |
|---|---|---|---|
| OBL species | 0 | x 1 = | 0 |
| FACW species | 0 | x 2 = | 0 |
| FAC species | 31 | x 3 = | 93 |
| FACU species | 56 | x 4 = | 224 |
| UPL species | 0 | x 5 = | 0 |
| Column Totals: | 87 (A) | | 317 (B) |

Prevalence Index = B/A = 3.64

**Hydrophytic Vegetation Indicators:**

No 1 - Rapid Test for Hydrophytic Vegetation

Yes 2 - Dominance Test is >50%

No 3 - Prevalence Index is ≤3.0[1]

Yes Problematic Hydrophytic Vegetation[1] (Explain in Remarks or in the delineation report)

[1]Indicators of hydric soil and wetland hydrology must be present, unless disturbed or problematic.

**Hydrophytic Vegetation Present?** Yes X No ____

Remarks: Much of the vegetation around this sampling point had been mowed and is maintained mostly free of vegetation as part of a cooperative wetland enhancement project for a variety of waterbirds and shorebirds. While sparse, the vegetation is still representative of what naturally grows here.

## SOIL

Sampling Point: 2

**Profile Description:** (Describe to the depth needed to document the indicator or confirm the absence of indicators.)

| Depth (inches) | Matrix Color (moist) | % | Redox Features Color (moist) | % | Type[1] | Loc[2] | Texture | Remarks |
|---|---|---|---|---|---|---|---|---|
| 0-18 | 2.5YR 3/4 | 100 | — | — | — | — | silt loam | dark reddish-brown unstructured |
| | | | | | | | | |
| | | | | | | | | |
| | | | | | | | | |
| | | | | | | | | |
| | | | | | | | | |
| | | | | | | | | |

[1]Type: C=Concentration, D=Depletion, RM=Reduced Matrix, MS=Masked Sand Grains. [2]Location: PL=Pore Lining, M=Matrix.

**Hydric Soil Indicators:**

- ___ Histosol (A1)
- ___ Histic Epipedon (A2)
- ___ Black Histic (A3)
- ___ Hydrogen Sulfide (A4)
- ___ Muck Presence (A8)
- ___ Depleted Below Dark Surface (A11)
- ___ Thick Dark Surface (A12)
- ___ Sandy Gleyed Matrix (S4)
- ___ Sandy Redox (S5)
- ___ Dark Surface (S7)
- ___ Loamy Gleyed Matrix (F2)
- ___ Depleted Matrix (F3)
- ___ Redox Dark Surface (F6)
- ___ Depleted Dark Surface (F7)
- ___ Redox Depressions (F8)

**Indicators for Problematic Hydric Soils[3]:**

- ___ Stratified Layers (A5)
- ___ Sandy Mucky Mineral (S1)
- ___ Red Parent Material (F21)
- ___ Very Shallow Dark Surface (TF12)
- ___ Other (Explain in Remarks)

[3]Indicators of hydrophytic vegetation and wetland hydrology must be present, unless disturbed or problematic.

**Restrictive Layer (if observed):**

Type: None

Depth (inches): ___

**Hydric Soil Present?** Yes ___ No X

**Remarks:**

The soil at this site does not have any positive indicators of a hydric soil. This sampling point lies along a slope running down from the adjacent DHHL Lot. The wetland boundary appears to be at the toe of this slope which is 19 feet from the DHHL Lot.

## HYDROLOGY

**Wetland Hydrology Indicators:** (Explain observations in Remarks, if needed.)

Primary Indicators (minimum of one required; check all that apply)

- ___ Surface Water (A1)
- ___ High Water Table (A2)
- ___ Saturation (A3)
- ___ Water Marks (B1)
- ___ Sediment Deposits (B2)
- ___ Drift Deposits (B3)
- ___ Algal Mat or Crust (B4)
- ___ Iron Deposits (B5)
- ___ Inundation Visible on Aerial Imagery (B7)
- ___ Water-Stained Leaves (B9)
- ___ Aquatic Fauna (B13)
- ___ Tilapia Nests (B17)
- ___ Hydrogen Sulfide Odor (C1)
- ___ Oxidized Rhizospheres on Living Roots (C3)
- ___ Presence of Reduced Iron (C4)
- ___ Recent Iron Reduction in Tilled Soils (C6)
- ___ Thin Muck Surface (C7)
- ___ Fiddler Crab Burrows (C10) (Guam, CNMI, and American Samoa)
- ___ Other (Explain in Remarks)

Secondary Indicators (minimum of two required)

- ___ Surface Soil Cracks (B6)
- ___ Sparsely Vegetated Concave Surface (B8)
- ___ Drainage Patterns (B10)
- ___ Dry-Season Water Table (C2)
- ___ Salt Deposits (C5)
- ___ Stunted or Stressed Plants (D1)
- ___ Geomorphic Position (D2)
- ___ Shallow Aquitard (D3)
- ___ FAC-Neutral Test (D5)

**Field Observations:**

Surface Water Present? Yes ___ No X Depth (inches): ___

Water Table Present? Yes ___ No X Depth (inches): ___

Saturation Present? (includes capillary fringe) Yes ___ No X Depth (inches): ___

**Wetland Hydrology Present?** Yes ___ No X

Describe Recorded Data (stream gauge, monitoring well, aerial photos, previous inspections), if available:

**Remarks:**

While close to the wetland boundary, this sampling point does not have many positive signs of wetland hydrology.



Sampling Point 2A. Located near the bottom of the slope below the DHHL lot boundary.



Sampling Point 2B. Dark reddish-brown silt. Loam to 18 inches depth.
Did not reach saturation or water table depths.

## WETLAND DETERMINATION DATA FORM – Hawai'i and Pacific Islands Region

Project/Site: DHHL Kapa'akea Flood Mitigation Project City: Kapa'akea Sampling Date: 1-08-14 Time: 0850

Applicant/Owner: Department of Hawaiian Home Lands State/Terr/Comth: Hawaii Island: Moloka'i Sampling Point: 3

Investigator(s): Robert Hobby TMK/Parcel: (2)5-4-07: 9,10,11, 14,25

Landform (hillslope, coastal plain, etc.): Coastal Plain Local relief (concave, convex, none): Concave

Lat: 21° 05' 04.29" N Long: 157° 00' 45.58" W Datum: WGS Slope (%): 0-3%

Soil Map Unit Name: Kealia Silt Loam NWI classification: PEM13

Are climatic / hydrologic conditions on the site typical for this time of year? Yes X No ____ (If no, explain in Remarks.)

Are Vegetation Yes, Soil NO, or Hydrology NO significantly disturbed? Are "Normal Circumstances" present? Yes X No ____

Are Vegetation ND, Soil NO, or Hydrology NO naturally problematic? (If needed, explain any answers in Remarks.)

### SUMMARY OF FINDINGS – Attach site map showing sampling point locations, transects, important features, etc.

| | | | |
|---|---|---|---|
| Hydrophytic Vegetation Present? | Yes X | No ____ | Is the Sampled Area within a Wetland? Yes ____ No X |
| Hydric Soil Present? | Yes ____ | No X | |
| Wetland Hydrology Present? | Yes ____ | No X | |

Remarks: The boundary of the DHHL lot stands about 2 ft higher than the sampling point which is near the base of the slope between them.

### VEGETATION – Use scientific names of plants.

| Tree Stratum (Plot size: ____) | Absolute % Cover | Dominant Species? | Indicator Status |
|---|---|---|---|
| 1. | | | |
| 2. | | | |
| 3. | | | |
| 4. | | | |
| 5. | | | |
| | 0 = Total Cover | | |
| **Sapling/Shrub Stratum** (Plot size: 10 ft radius) | | | |
| 1. Pluchea indica | 5 | Yes | FAC |
| 2. Prosopis pallida | 3 | Yes | FACU |
| 3. | | | |
| 4. | | | |
| 5. | | | |
| | 8 = Total Cover | | |
| **Herb Stratum** (Plot size: 10 ft radius) | | | |
| 1. Batis maritima | 7 | Yes | OBL |
| 2. Heliotropium curassavicum | 3 | Yes | FAC |
| 3. | | | |
| 4. | | | |
| 5. | | | |
| 6. | | | |
| 7. | | | |
| 8. | | | |
| | 10 = Total Cover | | |
| **Woody Vine Stratum** (Plot size: ____) | | | |
| 1. | | | |
| 2. | | | |
| | 0 = Total Cover | | |

**Dominance Test worksheet:**

Number of Dominant Species That Are OBL, FACW, or FAC: 3 (A)

Total Number of Dominant Species Across All Strata: 4 (B)

Percent of Dominant Species That Are OBL, FACW, or FAC: 75% (A/B)

**Prevalence Index worksheet:**

| Total % Cover of | | Multiply by: | |
|---|---|---|---|
| OBL species | 7 | x 1 = | 7 |
| FACW species | 0 | x 2 = | 0 |
| FAC species | 8 | x 3 = | 24 |
| FACU species | 3 | x 4 = | 12 |
| UPL species | 0 | x 5 = | 0 |
| Column Totals: | 18 (A) | | 43 (B) |

Prevalence Index = B/A = 2.39

**Hydrophytic Vegetation Indicators:**

ND 1 - Rapid Test for Hydrophytic Vegetation

Yes 2 - Dominance Test is >50%

Yes 3 - Prevalence Index is ≤3.0[1]

Yes 4 - Problematic Hydrophytic Vegetation[1] (Explain in Remarks or in the delineation report)

[1]Indicators of hydric soil and wetland hydrology must be present, unless disturbed or problematic.

**Hydrophytic Vegetation Present?** Yes X No ____

Remarks: Much of the vegetation around this sampling point had been mowed and is maintained mostly free of vegetation as part of a cooperative wetland enhancement project for a variety of waterbirds and shorebirds. While sparse, the vegetation is still representative of what naturally grows here.

## SOIL

Sampling Point: 3

**Profile Description:** (Describe to the depth needed to document the indicator or confirm the absence of indicators.)

| Depth (inches) | Matrix Color (moist) | % | Redox Features Color (moist) | % | Type[1] | Loc[2] | Texture | Remarks |
|---|---|---|---|---|---|---|---|---|
| 0-17 | 2.5YR 3/4 | 100 | – | – | – | – | Silt loam with stratified | dark reddish brown |
| 17-20 | 2.5YR 3/3 | 100 | – | – | – | – | silty clay loam | ducky red, saturated |
| | | | | | | | | |
| | | | | | | | | |
| | | | | | | | | |
| | | | | | | | | |
| | | | | | | | | |

[1]Type: C=Concentration, D=Depletion, RM=Reduced Matrix, MS=Masked Sand Grains. [2]Location: PL=Pore Lining, M=Matrix.

**Hydric Soil Indicators:**

- ___ Histosol (A1)
- ___ Histic Epipedon (A2)
- ___ Black Histic (A3)
- ___ Hydrogen Sulfide (A4)
- ___ Muck Presence (A8)
- ___ Depleted Below Dark Surface (A11)
- ___ Thick Dark Surface (A12)
- ___ Sandy Gleyed Matrix (S4)
- ___ Sandy Redox (S5)
- ___ Dark Surface (S7)
- ___ Loamy Gleyed Matrix (F2)
- ___ Depleted Matrix (F3)
- ___ Redox Dark Surface (F6)
- ___ Depleted Dark Surface (F7)
- ___ Redox Depressions (F8)

**Indicators for Problematic Hydric Soils[3]:**

- ___ Stratified Layers (A5)
- ___ Sandy Mucky Mineral (S1)
- ___ Red Parent Material (F21)
- ___ Very Shallow Dark Surface (TF12)
- ___ Other (Explain in Remarks)

[3]Indicators of hydrophytic vegetation and wetland hydrology must be present, unless disturbed or problematic.

**Restrictive Layer (if observed):**

Type: None

Depth (inches): _____

**Hydric Soil Present?** Yes _____ No X

Remarks: The soil at this sampling point does not have any positive indicators of a hydric soil. This sampling point lies along a slope running down from the adjacent paved lot. The wetland boundary appears to be at the toe of this slope which is 18 feet from the paved lot.

## HYDROLOGY

**Wetland Hydrology Indicators:** (Explain observations in Remarks, if needed.)

Primary Indicators (minimum of one required; check all that apply)

- ___ Surface Water (A1)
- ___ High Water Table (A2)
- ___ Saturation (A3)
- ___ Water Marks (B1)
- ___ Sediment Deposits (B2)
- ___ Drift Deposits (B3)
- ___ Algal Mat or Crust (B4)
- ___ Iron Deposits (B5)
- ___ Inundation Visible on Aerial Imagery (B7)
- ___ Water-Stained Leaves (B9)
- ___ Aquatic Fauna (B13)
- ___ Tilapia Nests (B17)
- ___ Hydrogen Sulfide Odor (C1)
- ___ Oxidized Rhizospheres on Living Roots (C3)
- ___ Presence of Reduced Iron (C4)
- ___ Recent Iron Reduction in Tilled Soils (C6)
- ___ Thin Muck Surface (C7)
- ___ Fiddler Crab Burrows (C10) (Guam, CNMI, and American Samoa)
- ___ Other (Explain in Remarks)

Secondary Indicators (minimum of two required)

- ___ Surface Soil Cracks (B6)
- ___ Sparsely Vegetated Concave Surface (B8)
- ___ Drainage Patterns (B10)
- ___ Dry-Season Water Table (C2)
- ___ Salt Deposits (C5)
- ___ Stunted or Stressed Plants (D1)
- ___ Geomorphic Position (D2)
- ___ Shallow Aquitard (D3)
- ___ FAC-Neutral Test (D5)

**Field Observations:**

Surface Water Present? Yes _____ No X Depth (inches)

Water Table Present? Yes X No _____ Depth (inches): 20 in.

Saturation Present? (includes capillary fringe) Yes X No _____ Depth (inches): 17 in.

**Wetland Hydrology Present?** Yes _____ No X

Describe Recorded Data (stream gauge, monitoring well, aerial photos, previous inspections), if available:

Remarks:

While close to the wetland boundary, this sampling point does not have any positive indicators of wetland hydrology.



Sampling Point 3A. Located near the bottom of the slope below the DHHL lot boundary.



Sampling Point 3B. Dark reddish-brown silt loam over dusky red silty clay loam. Saturation at 17 inches. Water table at 20 inches.

## WETLAND DETERMINATION DATA FORM – Hawai'i and Pacific Islands Region

Project/Site: Kihei Kapaakea Road Mitigation Project City: Kapaakea Sampling Date: 1-08-16 Time: 0915

Applicant/Owner: Department of Hawaiian Home Lands State/Terr/Constn: Hawaii Island: Maui Sampling Point: 4

Investigator(s): Robert Hobby TMK/Parcel: 2-5-4-07: 9, 10, 11, 24, 25

Landform (hillslope, coastal plain, etc.): Coastal Plain Local relief (concave, convex, none): Concave

Lat: 21° 05' 03.41" N Long: 157° 00' 45.97" W Datum: WGS Slope (%): 0-1%

Soil Map Unit Name: Keahia Silt Loam NWI classification: PEM1B

Are climatic / hydrologic conditions on the site typical for this time of year? Yes X No ____ (If no, explain in Remarks.)

Are Vegetation Yes, Soil No or Hydrology No significantly disturbed? Are "Normal Circumstances" present? Yes X No ____

Are Vegetation No Soil No or Hydrology No naturally problematic? (If needed, explain any answers in Remarks.)

### SUMMARY OF FINDINGS – Attach site map showing sampling point locations, transects, important features, etc.

| | | | |
|---|---|---|---|
| Hydrophytic Vegetation Present? | Yes X | No ____ | **Is the Sampled Area within a Wetland?** Yes ____ No ____ |
| Hydric Soil Present? | Yes ____ | No ____ | |
| Wetland Hydrology Present? | Yes ____ | No ____ | |

Remarks: The boundary of the Dill lot stands about 3 ft above the sampling point which is near the base of the slope between them.

### VEGETATION – Use scientific names of plants.

| | Absolute % Cover | Dominant Species? | Indicator Status |
|---|---|---|---|
| Tree Stratum (Plot size: ____) | | | |
| 1. | | | |
| 2. | | | |
| 3. | | | |
| 4. | | | |
| 5. | | | |
| | 0 = Total Cover | | |
| Sapling/Shrub Stratum (Plot size: 10ft radius) | | | |
| 1. Pluchea indica | 25 | Yes | FAC |
| 2. | | | |
| 3. | | | |
| 4. | | | |
| 5. | | | |
| | 25 = Total Cover | | |
| Herb Stratum (Plot size: 10ft radius) | | | |
| 1. Batis maritima | 40 | Yes | OBL |
| 2. Cynodon dactylon | 10 | Yes | FACU |
| 3. | | | |
| 4. | | | |
| 5. | | | |
| 6. | | | |
| 7. | | | |
| 8. | | | |
| | 50 = Total Cover | | |
| Woody Vine Stratum (Plot size: ____) | | | |
| 1. | | | |
| 2. | | | |
| | ____ = Total Cover | | |

**Dominance Test worksheet:**

Number of Dominant Species That Are OBL, FACW, or FAC: 2 (A)

Total Number of Dominant Species Across All Strata: 3 (B)

Percent of Dominant Species That Are OBL, FACW, or FAC: 67% (A/B)

**Prevalence Index worksheet:**

| Total % Cover of: | | Multiply by: | |
|---|---|---|---|
| OBL species | 40 | x 1 = | 40 |
| FACW species | 0 | x 2 = | 0 |
| FAC species | 25 | x 3 = | 75 |
| FACU species | 10 | x 4 = | 40 |
| UPL species | 0 | x 5 = | 0 |
| Column Totals: | 75 (A) | | 155 (B) |

Prevalence Index = B/A = 2.06

**Hydrophytic Vegetation Indicators:**

No 1 - Rapid Test for Hydrophytic Vegetation

Yes 2 - Dominance Test is >50%

Yes 3 - Prevalence Index is ≤3.0[1]

Yes 5 Problematic Hydrophytic Vegetation[1] (Explain in Remarks or in the delineation report)

[1]Indicators of hydric soil and wetland hydrology must be present, unless disturbed or problematic.

**Hydrophytic Vegetation Present?** Yes X No ____

Remarks: Much of the vegetation around this sampling point had been mowed and is maintained mostly free of vegetation as part of a cooperative wetland enhancement project for a variety of waterbirds and shorebirds. While sparse, the vegetation is still representative of what normally grows here.

## SOIL

Sampling Point: 4

**Profile Description:** (Describe to the depth needed to document the indicator or confirm the absence of indicators.)

| Depth (inches) | Matrix Color (moist) | % | Redox Features Color (moist) | % | Type[1] | Loc[2] | Texture | Remarks |
|---|---|---|---|---|---|---|---|---|
| 0-19 | 2.5YR 3/4 | 100 | – | – | – | – | silt loam | dark reddish-brown vesicular soil |
| 19-23 | 2.5YR 3/3 | 100 | – | – | – | – | silty clay loam | dusky red, saturated |
| | | | | | | | | |
| | | | | | | | | |
| | | | | | | | | |
| | | | | | | | | |
| | | | | | | | | |

[1]Type: C=Concentration, D=Depletion, RM=Reduced Matrix, MS=Masked Sand Grains. [2]Location: PL=Pore Lining, M=Matrix.

**Hydric Soil Indicators:**

- ___ Histosol (A1)
- ___ Histic Epipedon (A2)
- ___ Black Histic (A3)
- ___ Hydrogen Sulfide (A4)
- ___ Muck Presence (A8)
- ___ Depleted Below Dark Surface (A11)
- ___ Thick Dark Surface (A12)
- ___ Sandy Gleyed Matrix (S4)
- ___ Sandy Redox (S5)
- ___ Dark Surface (S7)
- ___ Loamy Gleyed Matrix (F2)
- ___ Depleted Matrix (F3)
- ___ Redox Dark Surface (F6)
- ___ Depleted Dark Surface (F7)
- ___ Redox Depressions (F8)

**Indicators for Problematic Hydric Soils[3]:**

- ___ Stratified Layers (A5)
- ___ Sandy Mucky Mineral (S1)
- ___ Red Parent Material (F21)
- ___ Very Shallow Dark Surface (TF12)
- ___ Other (Explain in Remarks)

[3]Indicators of hydrophytic vegetation and wetland hydrology must be present, unless disturbed or problematic.

**Restrictive Layer (if observed):**

Type: None

Depth (inches): _____

**Hydric Soil Present?** Yes _____ No X

Remarks: The soil at this sampling point does not have any positive indicators of a hydric soil. This sampling point lies along a slope running down from the adjacent DHHL lot. The wetland boundary appears to be at the toe of this slope which is 18 feet from the DHHL lot.

## HYDROLOGY

**Wetland Hydrology Indicators:** (Explain observations in Remarks, if needed.)

Primary Indicators (minimum of one required; check all that apply)

- ___ Surface Water (A1)
- ___ High Water Table (A2)
- ___ Saturation (A3)
- ___ Water Marks (B1)
- ___ Sediment Deposits (B2)
- ___ Drift Deposits (B3)
- ___ Algal Mat or Crust (B4)
- ___ Iron Deposits (B5)
- ___ Inundation Visible on Aerial Imagery (B7)
- ___ Water-Stained Leaves (B9)
- ___ Aquatic Fauna (B13)
- ___ Tilapia Nests (B17)
- ___ Hydrogen Sulfide Odor (C1)
- ___ Oxidized Rhizospheres on Living Roots (C3)
- ___ Presence of Reduced Iron (C4)
- ___ Recent Iron Reduction in Tilled Soils (C6)
- ___ Thin Muck Surface (C7)
- ___ Fiddler Crab Burrows (C10) (Guam, CNMI, and American Samoa)
- ___ Other (Explain in Remarks)

Secondary Indicators (minimum of two required)

- ___ Surface Soil Cracks (B6)
- ___ Sparsely Vegetated Concave Surface (B8)
- ___ Drainage Patterns (B10)
- ___ Dry-Season Water Table (C2)
- ___ Salt Deposits (C5)
- ___ Stunted or Stressed Plants (D1)
- ___ Geomorphic Position (D2)
- ___ Shallow Aquitard (D3)
- ___ FAC-Neutral Test (D5)

**Field Observations:**

Surface Water Present? Yes _____ No X Depth (inches): _____

Water Table Present? Yes X No _____ Depth (inches): 23 in.

Saturation Present? (includes capillary fringe) Yes X No _____ Depth (inches): 19 in.

**Wetland Hydrology Present?** Yes _____ No X

Describe Recorded Data (stream gauge, monitoring well, aerial photos, previous inspections), if available:

Remarks:

While close to the wetland boundary, this sampling point does not have any positive indicators of wetland hydrology.



Sampling Point 4A. Located near the bottom of the slope below the DHHL lot boundary.



Sampling Point 4B. Dark reddish-brown silt loam over dusky red silty clay loam. Saturation at 19 inches. Water table at 23 inches.

## WETLAND DETERMINATION DATA FORM – Hawai'i and Pacific Islands Region

Project/Site: DHHL Kapa'akea Flood Mitigation Project City: Kapa'akea Sampling Date: 1-08-16 Time: 0945

Applicant/Owner: Department of Hawaiian Home Lands State/Terr/Comlth: Hawai'i Island: Moloka'i Sampling Point: 5

Investigator(s): Robert Hobby TMK/Parcel: (2) 5-4-07:3, 10, 11; 121, 125

Landform (hillslope, coastal plain, etc.): coastal plain Local relief (concave, convex, none): concave

Lat: 21° 05' 02.55" N Long: 157° 00' 46.40" W Datum: 3 ft Slope (%): 0-1 %

Soil Map Unit Name: Keaiwa Silt Loam NWI classification: PEM13

Are climatic / hydrologic conditions on the site typical for this time of year? Yes X No ____ (If no, explain in Remarks.)

Are Vegetation Yes, Soil NO or Hydrology NO significantly disturbed? Are "Normal Circumstances" present? Yes X No ____

Are Vegetation ND Soil ND or Hydrology NO naturally problematic? (If needed, explain any answers in Remarks.)

### SUMMARY OF FINDINGS – Attach site map showing sampling point locations, transects, important features, etc.

| | | | |
|---|---|---|---|
| Hydrophytic Vegetation Present? | Yes ____ | No X | **Is the Sampled Area within a Wetland?** Yes ____ No X |
| Hydric Soil Present? | Yes ____ | No X | |
| Wetland Hydrology Present? | Yes ____ | No X | |

Remarks: The boundary of the DHHL lot stands about 2 ft. higher than the sampling point which is near the base of the slope between them.

### VEGETATION – Use scientific names of plants.

| Tree Stratum (Plot size: ____) | Absolute % Cover | Dominant Species? | Indicator Status |
|---|---|---|---|
| 1. | | | |
| 2. | | | |
| 3. | | | |
| 4. | | | |
| 5. | | | |
| | 0 = Total Cover | | |
| **Sapling/Shrub Stratum** (Plot size: ____) | | | |
| 1. | | | |
| 2. | | | |
| 3. | | | |
| 4. | | | |
| 5. | | | |
| | 0 = Total Cover | | |
| **Herb Stratum** (Plot size: 10ft radius) | | | |
| 1. Cynodon dactylon | 20 | Yes | FACU |
| 2. Heliotropium curassavicum 2 | ND | | FAC |
| 3. | | | |
| 4. | | | |
| 5. | | | |
| 6. | | | |
| 7. | | | |
| 8. | | | |
| | 22 = Total Cover | | |
| **Woody Vine Stratum** (Plot size: ____) | | | |
| 1. | | | |
| 2. | | | |
| | 0 = Total Cover | | |

**Dominance Test worksheet:**

Number of Dominant Species That Are OBL, FACW, or FAC: 0 (A)

Total Number of Dominant Species Across All Strata: 1 (B)

Percent of Dominant Species That Are OBL, FACW, or FAC: 0% (A/B)

**Prevalence Index worksheet:**

| Total % Cover of: | Multiply by: | |
|---|---|---|
| OBL species | x 1 = | |
| FACW species | x 2 = | |
| FAC species 2 | x 3 = | 6 |
| FACU species 20 | x 4 = | 80 |
| UPL species | x 5 = | |
| Column Totals: 22 (A) | | 86 (B) |

Prevalence Index = B/A = 3.91

**Hydrophytic Vegetation Indicators:**

ND1 - Rapid Test for Hydrophytic Vegetation

ND2 - Dominance Test is >50%

ND3 - Prevalence Index is ≤3.0[1]

YES Problematic Hydrophytic Vegetation[1] (Explain in Remarks or in the delineation report)

[1]Indicators of hydric soil and wetland hydrology must be present, unless disturbed or problematic.

**Hydrophytic Vegetation Present?** Yes ____ No X

Remarks: Much of the vegetation around this sampling point had been mowed and is maintained mostly free of vegetation as part of a cooperative wetland enhancement project for a variety of waterbirds and shorebirds. While sparse, the vegetation is still representative of what naturally grows here.

## SOIL

Sampling Point: 5

**Profile Description:** (Describe to the depth needed to document the indicator or confirm the absence of indicators.)

| Depth (inches) | Matrix Color (moist) | % | Redox Features Color (moist) | % | Type[1] | Loc[2] | Texture | Remarks |
|---|---|---|---|---|---|---|---|---|
| 0-14 | 2.5YR 3/4 | 100 | — | — | — | — | silt loam | dark reddish-brown unstratified |
| 14-24 | 2.5YR 4/3 | 100 | — | — | — | — | clay loam | dark reddish-gray |
| | | | | | | | | |
| | | | | | | | | |
| | | | | | | | | |
| | | | | | | | | |
| | | | | | | | | |

[1]Type: C=Concentration, D=Depletion, RM=Reduced Matrix, MS=Masked Sand Grains. [2]Location: PL=Pore Lining, M=Matrix.

**Hydric Soil Indicators:**

- ___ Histosol (A1)
- ___ Histic Epipedon (A2)
- ___ Black Histic (A3)
- ___ Hydrogen Sulfide (A4)
- ___ Muck Presence (A8)
- ___ Depleted Below Dark Surface (A11)
- ___ Thick Dark Surface (A12)
- ___ Sandy Gleyed Matrix (S4)
- ___ Sandy Redox (S5)
- ___ Dark Surface (S7)
- ___ Loamy Gleyed Matrix (F2)
- ___ Depleted Matrix (F3)
- ___ Redox Dark Surface (F6)
- ___ Depleted Dark Surface (F7)
- ___ Redox Depressions (F8)

**Indicators for Problematic Hydric Soils[3]:**

- ___ Stratified Layers (A5)
- ___ Sandy Mucky Mineral (S1)
- ___ Red Parent Material (F21)
- ___ Very Shallow Dark Surface (TF12)
- ___ Other (Explain in Remarks)

[3]Indicators of hydrophytic vegetation and wetland hydrology must be present, unless disturbed or problematic.

**Restrictive Layer (if observed):**

Type: hose

Depth (inches): ___

**Hydric Soil Present?** Yes ___ No X

Remarks: The soil at this sampling point does not have any positive indicators of a hydric soil. This sampling point lies along a slope running down from the adjacent DHHL lot. The wetland boundary appears to be at the toe of the slope which is 14 feet from from the DHHL Lot.

## HYDROLOGY

**Wetland Hydrology Indicators:** (Explain observations in Remarks, if needed.)

Primary Indicators (minimum of one required; check all that apply)

- ___ Surface Water (A1)
- ___ High Water Table (A2)
- ___ Saturation (A3)
- ___ Water Marks (B1)
- ___ Sediment Deposits (B2)
- ___ Drift Deposits (B3)
- ___ Algal Mat or Crust (B4)
- ___ Iron Deposits (B5)
- ___ Inundation Visible on Aerial Imagery (B7)
- ___ Water-Stained Leaves (B9)
- ___ Aquatic Fauna (B13)
- ___ Tilapia Nests (B17)
- ___ Hydrogen Sulfide Odor (C1)
- ___ Oxidized Rhizospheres on Living Roots (C3)
- ___ Presence of Reduced Iron (C4)
- ___ Recent Iron Reduction in Tilled Soils (C6)
- ___ Thin Muck Surface (C7)
- ___ Fiddler Crab Burrows (C10) (Guam, CNMI, and American Samoa)
- ___ Other (Explain in Remarks)

Secondary Indicators (minimum of two required)

- ___ Surface Soil Cracks (B6)
- ___ Sparsely Vegetated Concave Surface (B8)
- ___ Drainage Patterns (B10)
- ___ Dry-Season Water Table (C2)
- ___ Salt Deposits (C5)
- ___ Stunted or Stressed Plants (D1)
- ___ Geomorphic Position (D2)
- ___ Shallow Aquitard (D3)
- ___ FAC-Neutral Test (D5)

**Field Observations:**

Surface Water Present? Yes ___ No X Depth (inches):

Water Table Present? Yes X No ___ Depth (inches): 20 in.

Saturation Present? (includes capillary fringe) Yes X No ___ Depth (inches): 17 in.

**Wetland Hydrology Present?** Yes ___ No X

Describe Recorded Data (stream gauge, monitoring well, aerial photos, previous inspections), if available:

Remarks: While close to the wetland boundary, this sampling point does not have any positive indicators of wetland hydrology.



Sampling Point 5A. Located near the bottom of the slope below the DHHL Lot boundary.



Sampling Point 5B. Dark reddish-brown silt loam over dark reddish-gray clay loam. Saturation at 17 inches. Water table at 20 inches.

## WETLAND DETERMINATION DATA FORM – Hawai'i and Pacific Islands Region

Project/Site: DHHL Kapa'akea Flood Mitigation Project City: Kapa'akea Sampling Date: 1-08-16 Time: 1150

Applicant/Owner: Department of Hawaiian Home lands State/Terr/Comm: Hawaii Island: Molokai Sampling Point: 6

Investigator(s): Robert Hobdy TMK/Parcel: (2) 5-4-07: 9, 10, 11, 24, 25

Landform (hillslope, coastal plain, etc.): Coastal plain Local relief (concave, convex, none): Concave

Lat: 21° 05' 01.50" N Long: 157° 00' 46.94" W Datum: 2 ½ ft. Slope (%): 0-1%

Soil Map Unit Name: Kealia Silt Loam NWI classification: PEM13

Are climatic / hydrologic conditions on the site typical for this time of year? Yes X No ____ (If no, explain in Remarks.)

Are Vegetation Yes, Soil Yes or Hydrology No significantly disturbed? Are "Normal Circumstances" present? Yes X No ____

Are Vegetation No, Soil NO, or Hydrology NO naturally problematic? (If needed, explain any answers in Remarks.)

### SUMMARY OF FINDINGS – Attach site map showing sampling point locations, transects, important features, etc.

| | | |
|---|---|---|
| Hydrophytic Vegetation Present? | Yes X | No ____ |
| Hydric Soil Present? | Yes X | No ____ |
| Wetland Hydrology Present? | Yes X | No ____ |

**Is the Sampled Area within a Wetland?** Yes X No ____

Remarks: This sampling point was in the wetland boundary that appears to lie only 8 feet outside the DHHL lot boundary.

### VEGETATION – Use scientific names of plants.

| Tree Stratum (Plot size: 30 ft radius) | Absolute % Cover | Dominant Species? | Indicator Status |
|---|---|---|---|
| 1. Prosopis pallida | 20 | Yes | FACU |
| 2. | | | |
| 3. | | | |
| 4. | | | |
| 5. | | | |
| | 20 = Total Cover | | |

| Sapling/Shrub Stratum (Plot size: ____) | | | |
|---|---|---|---|
| 1. | | | |
| 2. | | | |
| 3. | | | |
| 4. | | | |
| 5. | | | |
| | 0 = Total Cover | | |

| Herb Stratum (Plot size: 30 ft radius) | | | |
|---|---|---|---|
| 1. Batis maritima | 35 | Yes | OBL |
| 2. Heliotropium curassavicum | 1 | NO | FAC |
| 3. | | | |
| 4. | | | |
| 5. | | | |
| 6. | | | |
| 7. | | | |
| 8. | | | |
| | 36 = Total Cover | | |

| Woody Vine Stratum (Plot size: ____) | | | |
|---|---|---|---|
| 1. | | | |
| 2. | | | |
| | 0 = Total Cover | | |

**Dominance Test worksheet:**

Number of Dominant Species That Are OBL, FACW, or FAC: 1 (A)

Total Number of Dominant Species Across All Strata: 2 (B)

Percent of Dominant Species That Are OBL, FACW, or FAC: 50% (A/B)

**Prevalence Index worksheet:**

| Total % Cover of: | | Multiply by: |
|---|---|---|
| OBL species | 35 | x 1 = 35 |
| FACW species | 0 | x 2 = 0 |
| FAC species | 1 | x 3 = 3 |
| FACU species | 20 | x 4 = 80 |
| UPL species | 0 | x 5 = 0 |
| Column Totals: | 56 (A) | 118 (B) |

Prevalence Index = B/A = 2.11

**Hydrophytic Vegetation Indicators:**

No 1 - Rapid Test for Hydrophytic Vegetation

No 2 - Dominance Test is >50%

Yes 3 - Prevalence Index is ≤3.0[1]

Yes Problematic Hydrophytic Vegetation[1] (Explain in Remarks or in the delineation report)

[1]Indicators of hydric soil and wetland hydrology must be present, unless disturbed or problematic.

**Hydrophytic Vegetation Present?** Yes X No ____

Remarks: The vegetation in this sampling point had been largely removed during clearing work done during the wetland enhancement project and has not fully grown back with desireable species. While the vegetation is marginally hydrophytic I have tipped into a positive rating because of the circumstances

## SOIL

Sampling Point: 6

**Profile Description:** (Describe to the depth needed to document the indicator or confirm the absence of indicators.)

| Depth (inches) | Matrix Color (moist) | % | Redox Features Color (moist) | % | Type[1] | Loc[2] | Texture | Remarks |
|---|---|---|---|---|---|---|---|---|
| 0-8 | 2.5YR 5/3 | 100 | - | - | - | - | Silt loam | reddish brown unstructured |
| 8-20 | 2.5YR 5/2 | 100 | - | - | - | - | silty Sand | Weak red sand saturated water table at 12 in. |

[1]Type: C=Concentration, D=Depletion, RM=Reduced Matrix, MS=Masked Sand Grains. [2]Location: PL=Pore Lining, M=Matrix.

**Hydric Soil Indicators:**

- ___ Histosol (A1)
- ___ Histic Epipedon (A2)
- ___ Black Histic (A3)
- X Hydrogen Sulfide (A4)
- ___ Muck Presence (A8)
- ___ Depleted Below Dark Surface (A11)
- ___ Thick Dark Surface (A12)
- ___ Sandy Gleyed Matrix (S4)
- ___ Sandy Redox (S5)
- ___ Dark Surface (S7)
- ___ Loamy Gleyed Matrix (F2)
- ___ Depleted Matrix (F3)
- ___ Redox Dark Surface (F6)
- ___ Depleted Dark Surface (F7)
- ___ Redox Depressions (F8)

**Indicators for Problematic Hydric Soils[3]:**

- ___ Stratified Layers (A5)
- ___ Sandy Mucky Mineral (S1)
- ___ Red Parent Material (F21)
- ___ Very Shallow Dark Surface (TF12)
- ___ Other (Explain in Remarks)

[3]Indicators of hydrophytic vegetation and wetland hydrology must be present, unless disturbed or problematic.

**Restrictive Layer (if observed):**

Type: Dense

Depth (inches): ___

**Hydric Soil Present?** Yes X No

Remarks:

The soil at this sampling point lies at a low point immediately above a Low coastal dune. The soil had been disturbed by equipment during habitat enhancement work and did not have typical hydric character.

## HYDROLOGY

**Wetland Hydrology Indicators:** (Explain observations in Remarks, if needed.)

Primary Indicators (minimum of one required, check all that apply)

- ___ Surface Water (A1)
- X High Water Table (A2)
- X Saturation (A3)
- ___ Water Marks (B1)
- ___ Sediment Deposits (B2)
- ___ Drift Deposits (B3)
- ___ Algal Mat or Crust (B4)
- ___ Iron Deposits (B5)
- ___ Inundation Visible on Aerial Imagery (B7)
- ___ Water-Stained Leaves (B9)
- ___ Aquatic Fauna (B13)
- ___ Tilapia Nests (B17)
- ___ Hydrogen Sulfide Odor (C1)
- ___ Oxidized Rhizospheres on Living Roots (C3)
- ___ Presence of Reduced Iron (C4)
- ___ Recent Iron Reduction in Tilled Soils (C6)
- ___ Thin Muck Surface (C7)
- ___ Fiddler Crab Burrows (C10) (Guam, CNMI, and American Samoa)
- ___ Other (Explain in Remarks)

Secondary Indicators (minimum of two required)

- ___ Surface Soil Cracks (B6)
- ___ Sparsely Vegetated Concave Surface (B8)
- ___ Drainage Patterns (B10)
- ___ Dry-Season Water Table (C2)
- X Salt Deposits (C5)
- ___ Stunted or Stressed Plants (D1)
- ___ Geomorphic Position (D2)
- ___ Shallow Aquitard (D3)
- ___ FAC-Neutral Test (D5)

**Field Observations:**

Surface Water Present? Yes ___ No X Depth (inches):

Water Table Present? Yes X No ___ Depth (inches): 12 in.

Saturation Present? (Includes capillary fringe) Yes X No ___ Depth (inches): 8 in.

**Wetland Hydrology Present?** Yes X No

Describe Recorded Data (stream gauge, monitoring well, aerial photos, previous inspections), if available:

Remarks:

This sampling point had salt deposits and shallow saturation and water table - it had wetland hydrology.



Sampling Point 6A. Located at the bottom of the slope below the DHHL lot boundary within the margin of the wetland.



Sampling Point 6B. Reddish-brown silt loam over weak red, saturated silty sand. Saturation at 8 inches. Water table at 12 inches.